GEORGIA DEPARTMENT OF TRANSPORTATION

SR 166 from Old Lower River Road to SR 70

Douglas and Fulton Counties

STP00-0186-01(022); PI#: 721770

VALUE ENGINEERING REPORT

SEPTEMBER 2010

Submitted by:

An employee-owned company

September 28, 2010

Ms. Lisa Myers, AVS
Design Review Engineer Manager/VE Coordinator
Georgia Department of Transportation-Engineering Services
One Georgia Center
600 W. Peachtree Street NW
Atlanta, GA 30308

RE: Value Engineering Report
STP00-0186-01(022); PI#: 721770
SR 166 Widening
Douglas/Fulton Counties

Dear Ms. Myers:

Please find enclosed two (2) hard copies and one (1) CD of our Value Engineering Report for widening of 6.97 miles of SR 166 from Old Lower River Road in Douglas County to SR 70 in Fulton County Using the Value Engineering "Job Plan" – Investigation, Analysis (*Function)*, Speculation, Evaluation & Development, the VE Team identified:

Eight (8) Alternatives recommended improving the project value.

We trust that you will find this report to be in proper order. It should be noted that the results of this workshop are volatile in that they can be overcome by the events that accompany the expeditious continuance of the design process. Accordingly, we encourage an equally expeditious implementation meeting to design the disposition of the contents of this report.

Please contact me at 678-677-6420 should you have any questions regarding this submittal.

On behalf of our VE Team, we thank you very much for the opportunity to work with you and the hard working staff of the Georgia Department of Transportation.

Yours truly,

Les M. Thomas

Les M. Thomas, P.E., CVS-Life
VE Team Leader

TABLE OF CONTENTS

1 EXECUTIVE SUMMARY 1-1

1.1 INTRODUCTION 1-1
1.2 PROJECT DESCRIPTION 1-1
1.3 VALUE ENGINEERING PROCESS 1-2
1.4 OBSERVATIONS 1-5
1.5 CONCLUSIONS AND RECOMMENDATIONS 1-5

2 STUDY RESULTS 2-1

2.1 INTRODUCTION 2-1
2.2 COST CALCULATIONS 2-1
2.3 ALTERNATIVES AND DESIGN SUGGESTIONS 2-1
2.3.1 ALTERNATIVE NUMBER BR - 1 2-2
2.3.2 ALTERNATIVE NUMBER BR-2 2-6
2.3.3 ALTERNATIVE NUMBER BR-3 2-10
2.3.4 ALTERNATIVE NUMBER BR-5 2-14
2.3.5 ALTERNATIVE NUMBER RD-4 2-18
2.3.6 ALTERNATIVE NUMBER RD-9 2-22
2.3.7 ALTERNATIVE NUMBER RD-16 2-26
2.3.8 ALTERNATIVE NUMBER RD-24 2-30

3 PROJECT DESCRIPTION 3-1

3.1 NEED AND PURPOSE 3-1
3.2 KICK-OFF PRESENTATION BY KIMLEY-HORN 3-1

4 VALUE ENGINEERING PROCESS 4-2

4.1 WORK SHOP TEAM 4-2
4.2 SIX-STEP VALUE ENGINEERING JOB PLAN 4-2
4.3 VE WORKSHOP AGENDA 4-5
4.4 CONSTRUCTION CAPITAL COST ESTIMATE 4-7
4.5 PARETO CHARTS 4-7
4.6 FUNCTIONAL ANALYSIS SYSTEM TECHNIQUE (FAST) DIAGRAM 4-9
4.7 ATTENDANCE SHEET FOR DESIGNERS AND VE TEAM PRESENTATIONS 4-0

1 EXECUTIVE SUMMARY

1.1 INTRODUCTION

The subject of this Value Engineering study is the SR 166 widening from Old Lower River Road in Douglas County to SR 70 in Fulton County. The design for this project has been prepared by Kimley-Horn & Associates, Inc. The project's design is at the construction documents submittal stage.

1.2 PROJECT DESCRIPTION

The project STP00-0186-01(022); PI#: 721770- SR 166 Widening, Douglas/Fulton Counties consists of the widening and reconstruction of SR 166 from Old Lower River Road in Douglas County to Fulton Industrial Boulevard/ SR 70 in Fulton County. The existing 2 and 3 lane rural roadway would be reconstructed to four 12-foot travel lanes divided by a 24-foot wide raised median with 10-foot wide shoulders (6.5 foot paved) left and right. Proposed widening will shift from side to side to reduce impacts to adjacent properties.

The project length is 18,010 feet along S.R 166. The project begins in Douglas County at Mile Post 19.06 on SR 166 east of the intersection with Old Lower River Toad and continues to the Douglas/ Fulton County line at Mile Post 20.80. The project then crosses the Chattahoochee River into Fulton County at Mile Post 0.00 and ends east of the intersection of SR 166 and Fulton Industrial Boulevard/ SR 70 at Mile Post 1.67. The proposed design speed is 55 mph along SR 166.

Figure 1-1: SR-166 current River Crossing

1.3 VALUE ENGINEERING PROCESS

The Value Engineering (VE) team followed the six step Value Engineering job plan as promulgated by SAVE International. Refer to Section 4.2 of this report for additional information on the VE process. The six step Job Plan includes the following:

Information Phase – during this phase of the VE Team's work, the team received a briefing from the GDOT project manager and the Kimley-Horn project manager. This briefing included discussions of the design intent behind the project, the cost concerns, and the physical project limitations. In the working session that followed, the VE team developed cost models from the cost data provided by the designers and familiarized themselves with the construction drawings and other data that was made available to the team. The VE Team visited the project site.

Function Analysis Phase – during this phase the VE Team determined the "**Functions"** of the project. This was accompanied by reviewing the project by asking the questions of "what is the project supposed to do?" and "how is it supposed to accomplish this purpose?" In the Value Engineering vernacular, the answers to these questions are cast in the form of active verbs and measurable nouns. These verb/noun pairs form the basis of the function analysis which distinguishes a Value Engineering effort from a potentially damaging cost-cutting exercise. A FAST diagram was prepared highlighting the project's required functions.

Creative Phase – The VE Team performed a brainstorming session to identify ideas that might help meet the project objectives. These ideas fell into the following major headings:

- Roadway Horizontal and Vertical Alignment
- River Crossing
- Right-of-way

The brainstorming session identified thirty (30) ideas, which are shown on pages 1-3 and 1-4.

Evaluation Phase – During this phase, the VE Team determines which of the creative ideas offer the best opportunity to improve the value of the project for further development. The first step is to determine the criteria that the ideas should be evaluated against. The VE Team reflected back on the project constraints and objectives shared with the team by the owner's representatives and the design team members and listed the following:

- First Costs
- Permit-ability
- Constructability
- Reliability
- Life Cycle Costs

CREATIVE IDEA LISTING

PROJECT: Georgia Department of Transportation

STP00-0186-01(022); PI#: 721770-

SR 166 Widening

No.	IDEA DESCRIPTION	Rating
	Bridge	
BR-1	Use an 8' outside shoulder on the bridge	4
BR-2	Provide a separate bridge	4
BR-3	Reduce bridge deck width from 97'-3" to 95'-3"	4
BR-4	Use an 8' outside shoulder and a 6' inside shoulder on a new bridge	2
BR-5	Demolish and re-construct only 15' of the existing bridge	4
BR-6	Symmetrically widen the existing bridge	2
	Roadway	
RD-1	Use Curb and Gutter in-lieu of shoulders	2
RD-2	Reduce design speed to 45 mph	3
RD-3	Reduce number of channelized right turns	2
RD-4	Reduce design speed to 45 mph and utilize an urban typical section	3
RD-5	Redesign Ridge Land Dr. with Britt Road	Observation
RD-6	Use 11' lanes	1
RD-7	Use 11' inside and 12' outside lanes	1
RD-8	Reduce shoulder width from 6'-6" to 4'-0"	2

Rating Scores: 1→2 = Not to be Developed; 3 = Varying Degrees of Development Potential;

4→5 = Most likely to be Developed; DS = Design Suggestion; ABD = Already Being Done

CREATIVE IDEA LISTING

PROJECT: Georgia Department of Transportation

STP00-0186-01(022); PI#: 721770-

SR 166 Widening

No.	IDEA DESCRIPTION	Rating
	Roadway	
RD-9	Delete rumble strips and use 4' paved shoulder	3
RD-10	Delete inside 2' shoulder	2
RD-11	Use 14' center turn lane	2
RD-12	Selectively provide positive slope protection in "cut" sections	2
RD-13	Re-align to locate roadway to the south between 0+00 and the River	2
RD-14	Re-align to locate roadway to the north between the River to 213+00	2
RD-15	Extend Britt Rd. westerly to avoid taking property	2
RD-16	End project at sta. 271+12	4
RD-17	Obtain a variance for the existing vertical alignment	2
RD-18	Cul-de-sac Britt Rd. at its easterly portion	2
Rd-19	Selectively use guard rails to reduce right-of-way	1
RD-20	Reduce number of median openings	4
RD-21	Bifurcate roadway to reduce right-of-way required	1
RD-22	Adjust the vertical grade to reduce the right of way required	3
RD-23	Selectively reduce the right of way required	4
RD-24	Shorten vertical curve at PVI Sta. 136+09.68	4

Rating Scores: 1→2 = Not to be Developed; 3 = Varying Degrees of Development Potential;

4→5 = Most likely to be Developed; DS = Design Suggestion; ABD = Already Being Done

Development Phase – During this phase, the VE Team developed each of the selected alternatives whose score was 4 or greater because of time constraints. If time permits, the team will develop additional recommendations. This effort included a detailed explanation of the idea with sketches as appropriate to clarify the idea from the original concept, advantages and disadvantages, a technical explanation and an estimation of the cost and resultant cost savings if implemented.

Recommendation Phase – During this phase, the VE Team reviews the alternative ideas to confirm which ones are appropriate for the project, provide an opportunity for success and which will improve the value of the project if implemented.

Presentation Phase – the team made a presentation to the Georgia Department of Transportation on the last day of the workshop. This presentation was designed to express the intent and clarify each of the recommended alternatives. This report is intended to formalize those findings.

1.4 OBSERVATIONS

The VE Team noted that it might be reasonable to redesign Ridgeland Dr. with Britt Road to yield a full intersection.

1.5 CONCLUSIONS AND RECOMMENDATIONS

The VE Team identified, developed, and recommends ***eight design alternatives*** for implementation to improve the value of the project as shown on the following page:

SUMMARY OF ALTERNATIVES

STP00-0186-01(022); PI#: 721770- SR 166 Widening, Douglas/Fulton Counties

Alternative Number	Description of alternatives	Initial cost savings
	BRIDGE	
BR-1	Use an 8' outside shoulder on the bridge	$ 237,600
BR-2	Provide a separate bridge in-lieu of widening the existing	$ 1,289,750
BR-3	Reduce bridge deck width from 97'-3" to 95'-3"	$ 118,000
BR-5	Demolish and re-construct only 15' of the existing bridge	$ 137,606
	ROADWAY	
RD-4	Reduce Design speed to 45 mph and utilize an urban typical section	$ 1,867,733
RD-9	Delete rumble strips and use 4' paved shoulder	$ 162,219
RD-16	End project at Sta. 271+12	$ 331,456
RD-24	Shorten vertical curve at PVI Sta. 136+09.68	$ 187,685

2 STUDY RESULTS

2.1 INTRODUCTION

This section includes the study results presented in the form of fully developed value engineering alternatives that include: descriptions of the original design; description of the alternative design; opportunities and risks; technical discussions; sketches; calculations; and a cost estimate of the impact of the alternative.

It should be noted that the estimated cost/savings calculated for these alternatives are very preliminary and are only presented to indicate a probable magnitude of cost impact on the project.

Also, these alternatives are "stand alone" ideas. In some cases they may be "added" to another alternative, or in other cases they may present a different method of constructing the same elements and are therefore not additive. A summary is provided in Section 1-5 - Executive Summary Conclusions and Recommendations.

Therefore, the users of this report are asked to consider these alternatives and design suggestions as a smorgasbord of choices for selection and use as appropriate as the project progresses.

2.2 COST CALCULATIONS

The cost calculations are intended only as an indicator to the approximate results that might be expected from implementation of the alternatives. They should be helpful in making clear choices as to the pursuit of individual alternatives.

2.3 ALTERNATIVES AND DESIGN SUGGESTIONS

Following are the ***eight design alternatives*** for implementation to improve the value of the project:

2.3.1 ALTERNATIVE NUMBER BR - 1

Value Analysis Design Alternative

Project:	Georgia Department of Transportation STP00-186-1(022) – P.I. No. 721770 SR 166 Widening Douglas/Fulton Counties	Alternative no.: **BR-1**
Description:	Use 8' Outside Shoulders on the Bridge	SHEET NO.: **1** of **4**

Original Design:

The existing 51'-3" wide, 9 span, 540' long bridge on SR 166 carrying 2 lanes across the Chattahoochee River is being partially demolished (28') and widened to the south by 74'-0.5". The widened 97'-3" bridge will accommodate 4 lanes, 10' outside shoulders and a 24'-wide raised median.

Alternative:

In lieu of providing 10' outside shoulders, the alternative suggests providing 8' outside shoulders to more closely match the approach roadway cross section.

Opportunities:

Reduction in cost

Section more closely matches approach Roadway

Risks:

Minimal redesign required

Technical Discussion:

By providing 8' outside shoulders, the total bridge required in the alternative is 93'-3" as opposed to 97'-3" provided in the current design.

The 4' reduction in bridge width will not affect Staging but a Method II Temporary Barrier may be required to be used.

See the following pages for calculations of cost savings.

COST SUMMARY	INITIAL COST	PRESENT WORTH RECURRING COSTS	PRESENT WORTH LIFE-CYCLE COST
ORIGINAL DESIGN	$ 237,600	$ 0	$ 237,600
ALTERNATIVE	$ 0	$ 0	$ 0
SAVINGS	$ 237,600	$ 0	$ 237,600

Illustration

Project:	Georgia Department of Transportation STP00-186-1(022) – P.I. No. 721770 SR 166 Widening Douglas/Fulton Counties	Alternative no.: **BR-1**
Description:	Use 8' Outside Shoulders on The Bridge	SHEET NO.: **2** of **4**

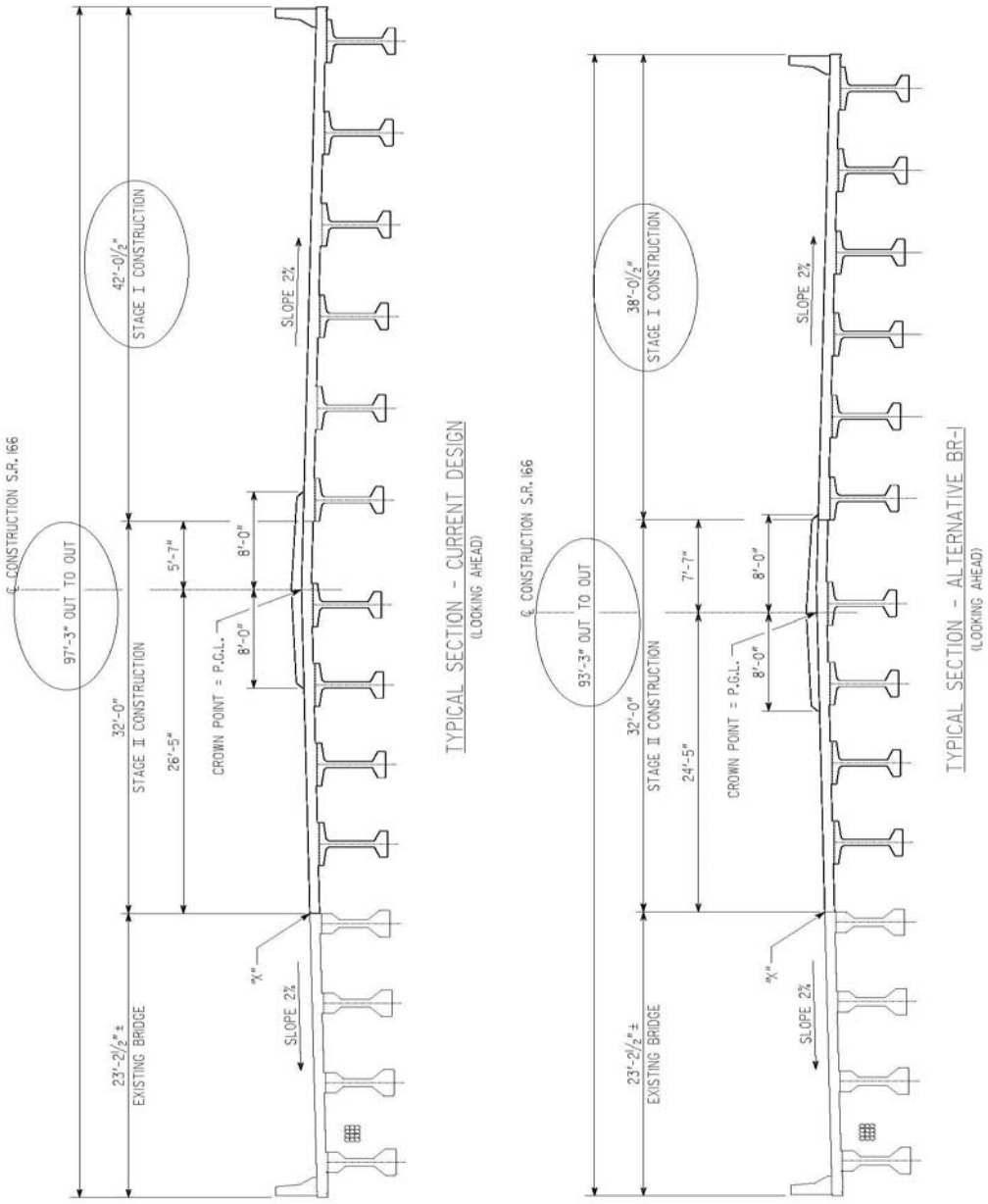

Calculations

Project:	Georgia Department of Transportation STP00-186-1(022) – P.I. No. 721770 SR 166 Widening Douglas/Fulton Counties	Alternative no.: **BR-1**
Description:	Use 8' Outside Shoulders on The Bridge	SHEET NO.: **3** of **4**

Note:

Reduction from current design = savings for alternative

Cost per SF of new construction (assumed) = $100

Cost for Current Design as provided to the VE Team at the time of the study

Current Design (6 Span – 540' Long – 90' Each Span, 97'-3" Out-to-Out Bridge after 64'-1/2" of New Widening).

Current design also includes demolition of the 26'-5" of the existing bridge deck and replacement of 4 existing beams.

Alternative Design (6 Span – 540' Long – 90' Each Span, 93'-3" Out-to-Out Bridge).

New Bridge Length = 540'

New Bridge Width = 93'-3"

Reduction in Deck area of Bridge (Alternative versus Current Design) = [540' X 4'] = 2160 SF

Other treatments (assumed same for current design & alternative, therefore, not considered).

NOTE:

A more detailed cost analysis may be performed on sufficiently developed alternative bridge plans to be able to itemize major components and realize greater cost savings than that shown in this study.

Cost Worksheet

PROJECT:	**Georgia Department of Transportation** **STP00-186-1(022) – P.I. No. 721770** **SR 166 Widening** **Douglas/Fulton Counties**	ALTERNATIVE NO.:	**BR-1**
DESCRIPTION:	**Use 8' Outside Shoulders on the Bridge**	SHEET NO.:	**4** of **4**

CONSTRUCTION ITEM		ORIGINAL ESTIMATE			PROPOSED ESTIMATE		
ITEM	UNITS	NO. OF UNITS	COST/ UNIT	TOTAL	NO. OF UNITS	COST/ UNIT	TOTAL
Alternative Design (Reduction	SF	2,160	$ 100	$ 216,000	0	$ 100	$ -
in Deck area)							
Note: Reduction from current design = savings for alternative							
Lump Sum amount for current design as provided to the VE Team.							
Assume $100 per SF of Bridge for New Construction							
Sub-total				$ 216,000			$ -
Cons't Mark-up 10.00%				$ 21,600			$ -
TOTAL				**$ 237,600**			**$ -**
Estimated Savings:							$237,600

2.3.2 ALTERNATIVE NUMBER BR-2

Value Analysis Design Alternative

Project:	Georgia Department of Transportation STP00-186-1(022) – P.I. No. 721770 SR 166 Widening Douglas/Fulton Counties	Alternative no.: **BR-2**
Description:	Provide A Separate Bridge In Lieu of Widening Existing	SHEET NO.: **1** of **4**

Original Design:

The existing 51'-3" wide, 9 span, 540' long bridge on SR 166 carrying 2 lanes across the Chattahoochee River is being partially demolished (28') and widened to the south by 74'-0.5". The widened 97'-3" bridge will accommodate 4 lanes, 10' outside shoulders and a 24'-wide raised median.

Alternative:

In lieu of partially demolishing the existing bridge by 28' and then widening the remainder to provide the 97'-3" width, the alternative suggests retaining the existing bridge to carry the Westbound lanes and constructing a new separate parallel bridge to the South, 41'-3" wide to carry the Eastbound lanes.

Opportunities:

Reduction in cost
Reduction in construction time

Ease of construction & MOT

No demolition required

Risks:

None apparent

Technical Discussion:

The construction of a new bridge to the south of the existing bridge to carry the eastbound lanes would obviate the need to partially demolish the existing bridge. The new parallel bridge would have the same geometry as the existing bridge except that it would be 41'-3" out-to-out to accommodate 2 – 12' travel lanes, 10' outside and 4' inside shoulders. The approach of the new roadway section to the existing bridge may require additional striping and/or guardrails to transition from the 6'-6" shoulder on the roadway to the 10' shoulder on the bridge (since the existing bridge is wide enough for 10' shoulders on both sides.

COST SUMMARY	INITIAL COST	PRESENT WORTH RECURRING COSTS	PRESENT WORTH LIFE-CYCLE COST
ORIGINAL DESIGN	$ 3,400,000	$ 0	$ 3,400,000
ALTERNATIVE	$ 2,450,250	$ 0	$ 2,450,250
SAVINGS	$ 1,289,750	$ 0	$ 1,289,750

Illustration

Project:	Georgia Department of Transportation STP00-186-1(022) – P.I. No. 721770 SR 166 Widening Douglas/Fulton Counties	Alternative no.: **BR-2**
Description:	Provide A Separate Bridge In Lieu of Widening Existing	SHEET NO.: **2** of **4**

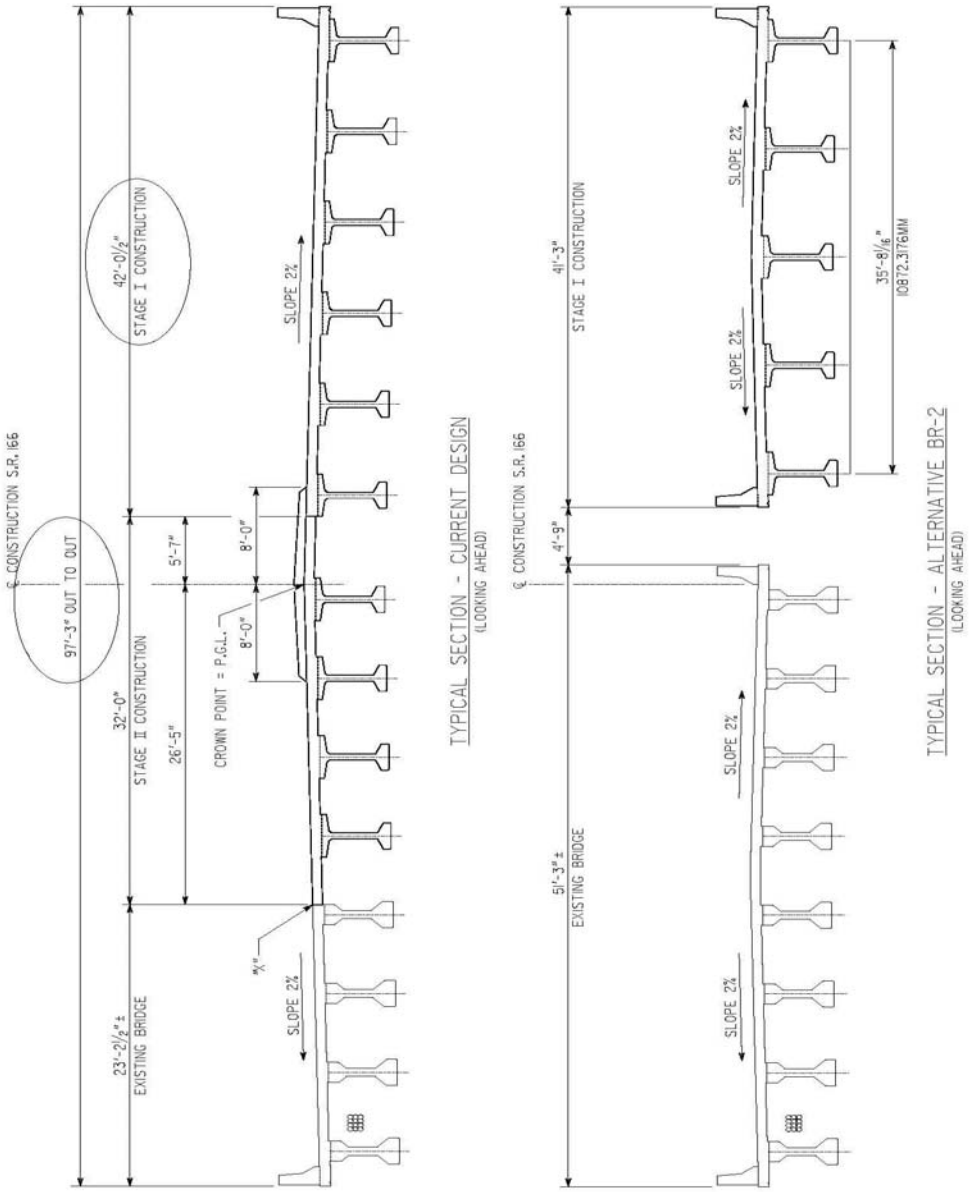

Calculations

Project:	Georgia Department of Transportation STP00-186-1(022) – P.I. No. 721770 SR 166 Widening Douglas/Fulton Counties	Alternative no.: **BR-2**
Description:	Provide A Separate Bridge In Lieu of Widening Existing	Sheet no.: **3** of **4**

Note:

Reduction from current design = savings for alternative

Cost per SF of new construction (assumed) = $100

Cost for Current Design as provided to the VE Team at the time of the study

Current Design (6 Span – 540’ Long – 90’ Each Span, 97’-3” Out-to-Out Bridge after 64’-1/2” of New Widening).

Current design also includes demolition of the 26’-5” of the existing bridge deck and replacement of 4 existing beams.

Alternative Design (New, 6 Span – 540’ Long – 90’ Each Span, 41’-3” Out-to-Out Bridge).

New Bridge Length = 540’

New Bridge Width = 41’-3”

Deck area of New Bridge = [540’ X 41.25’] = 22275 SF

Other treatments (assumed same for current design & alternative, therefore, not considered).

NOTE:

A more detailed cost analysis may be performed on sufficiently developed alternative bridge plans to be able to itemize major components and realize greater cost savings than that shown in this study. Examples: Reduction in construction time, MOT, grooved concrete, substructure concrete, diaphragm concrete, etc.). Also, demolition costs in current design are an additional saving.

Cost Worksheet

PROJECT: **Georgia Department of Transportation**
STP00-186-1(022) – P.I. No. 721770
SR 166 Widening
Douglas/Fulton Counties

ALTERNATIVE NO.: **BR-2**

DESCRIPTION: **Provide a separate bridge in-lieu of widening the existing**

SHEET NO.: **4** of **4**

CONSTRUCTION ITEM		ORIGINAL ESTIMATE			PROPOSED ESTIMATE		
ITEM	UNITS	NO. OF UNITS	COST/ UNIT	TOTAL	NO. OF UNITS	COST/ UNIT	TOTAL
Current Design (Lump Sum)	1	1	$ 3,400,000	$3,400,000	0	$3,400,000	$ -
Alternative Design	SF	0	$ 100.00	$ -	22275	$ 100.00	$ 2,227,500
Note: Reduction from current design = savings for alternative							
Lump Sum amount for current design as provided to the VE Team.							
Assume $100 per SF of Bridge for New Construction							
Sub-total				$3,400,000			$ 2,227,500
Cons't Mark-up	**10.00%**			$ 340,000			$ 222,750
TOTAL				**$3,740,000**			**$ 2,450,250**
Estimated Savings:							$1,289,750

2.3.3 ALTERNATIVE NUMBER BR-3

Value Analysis Design Alternative

Project:	Georgia Department of Transportation STP00-186-1(022) – P.I. No. 721770 SR 166 Widening Douglas/Fulton Counties	Alternative no.: **BR-3**
Description:	Reduce Deck Width from 97'-3" to 95'-3"	SHEET NO.: **1** of **4**

Original Design:

The existing 51'-3" wide, 9 span, 540' long bridge on SR 166 carrying 2 lanes across the Chattahoochee River is being partially demolished (28') and widened to the south by 74'-0.5". The widened 97'-3" bridge will accommodate 4 lanes, 10' outside shoulders and a 24' raised median.

Alternative:

In lieu of widening the existing bridge to 97'-3", the alternative suggests widening the existing bridge to 95'-3".

Opportunities:

Reduction in cost

Section more closely matches approach roadway

Risks:

Minimal redesign required

Technical Discussion:

The bridge is required to accommodate a 24' median, 2 – 12' travel lanes in each direction, 10' outside shoulders on each side and 1'-7.5" barriers on each side. Therefore, the total bridge width required is 95'-3" which is 2' less than that required in the current design.

The 2' reduction in bridge width will not affect Staging.

See the following pages for calculations of cost savings.

COST SUMMARY	INITIAL COST	PRESENT WORTH RECURRING COSTS	PRESENT WORTH LIFE-CYCLE COST
ORIGINAL DESIGN	$ 118,000	$ 0	$ 118,000
ALTERNATIVE	$ 0	$ 0	$ 0
SAVINGS	$ 118,000	$ 0	$ 118,000

Illustration

Project:	Georgia Department of Transportation STP00-186-1(022) – P.I. No. 721770 SR 166 Widening Douglas/Fulton Counties	Alternative no.: **BR-3**
Description:	Reduce Deck Width from 97'-3" to 95'-3"	SHEET NO.: **2** of **4**

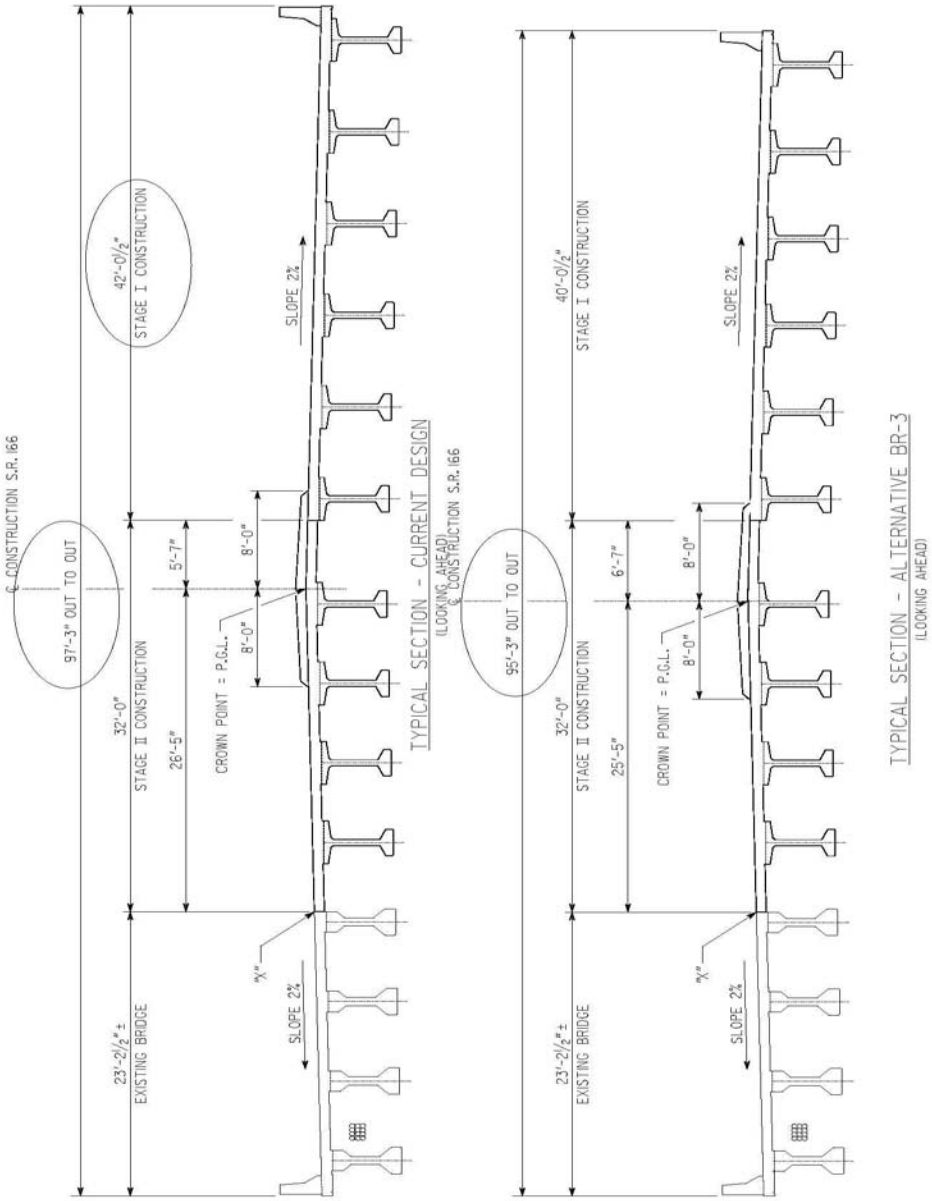

Calculations

Project:	Georgia Department of Transportation STP00-186-1(022) – P.I. No. 721770 SR 166 Widening Douglas/Fulton Counties	Alternative no.: **BR-3**
Description:	Reduce Deck Width from 97'-3" to 95'-3"	SHEET NO.: **3** of **4**

Note:

Reduction from current design = savings for alternative

Cost per SF of new construction (assumed) = $100

Cost for Current Design as provided to the VE Team at the time of the study

Current Design (6 Span – 540' Long – 90' Each Span, 97'-3" Out-to-Out Bridge after 64'-1/2" of New Widening).

Current design also includes demolition of the 26'-5" of the existing bridge deck and replacement of 4 existing beams.

Alternative Design (6 Span – 540' Long – 90' Each Span, 95'-3" Out-to-Out Bridge).

New Bridge Length = 540'

New Bridge Width = 95'-3"

Reduction in Deck area of Bridge (Alternative versus Current Design) = [540' X 2'] = 1080 SF

Other treatments (assumed same for current design & alternative, therefore, not considered).

NOTE:

A more detailed cost analysis may be performed on sufficiently developed alternative bridge plans to be able to itemize major components and realize greater cost savings than that shown in this study.

Cost Worksheet

PROJECT: **Georgia Department of Transportation**
STP00-186-1(022) – P.I. No. 721770
SR 166 Widening
Douglas/Fulton Counties

ALTERNATIVE NO.: **BR-3**

DESCRIPTION: **Reduce Deck Width from 97'-3" to 95'-3"**

SHEET NO.: **4** of **4**

CONSTRUCTION ITEM		ORIGINAL ESTIMATE			PROPOSED ESTIMATE		
ITEM	UNITS	NO. OF UNITS	COST/ UNIT	TOTAL	NO. OF UNITS	COST/ UNIT	TOTAL
Alternative Design (Reduction	SF	1,080	$ 100.00	$ 108,000	0	$ 100.00	$ -
in Deck area)							
Note: Reduction from current design = savings for alternative							
Lump Sum amount for current design as provided to the VE Team.							
Assume $100 per SF of Bridge for New Construction							
Sub-total				$ 108,000			$ -
Cons't Mark-up 10.00%				$ 10,800			$ -
TOTAL				**$ 118,800**			**$ -**

Estimated Savings: $118,800

2.3.4 ALTERNATIVE NUMBER BR-5

Value Analysis Design Alternative

PROJECT:	Georgia Department of Transportation STP00-186-1(022) – P.I. No. 721770 SR 166 Widening Douglas/Fulton Counties	ALTERNATIVE NO.: **BR-5**
DESCRIPTION:	Demolish and Reconstruct Only 15' of Existing Bridge	SHEET NO.: **1** of **4**

Original Design:

The existing 51'-3" wide, 9 span, 540' long bridge on SR 166 carrying 2 lanes across the Chattahoochee River is being partially demolished (28') and widened to the south by 74'-0.5". The widened 97'-3" bridge will accommodate 4 lanes, 10' outside shoulders and a 24' raised median.

Alternative:

In lieu of demolishing the existing bridge by 28' and then widening the remainder to provide the 97'-3" width, the alternative suggests demolishing only 15' existing bridge and widening the remainder to provide the 97'-3".

Opportunities:

- Reduction in cost
- Reduction in construction time
- Ease of construction
- Easier MOT and construction staging
- Reduced demolition required

Risks:

- Redesign of the bridge.

Technical Discussion:

The widening of the existing bridge to the desired 97'-3" of new width can be accomplished by demolishing only 15' of the existing bridge and beginning new construction from that point to the South. A wedge of deck overlay, maximum thickness of 4" on one end, may be poured across the reconstructed 15' portion in order to attain the desired 2% deck slope up to the new Bridge Centerline. Only two existing beams will need to be replaced in the alternative. For a conservative estimate of cost savings, the cost of overlaying the deck in the alternative has been assumed the same as constructing a new deck. Only the savings in not having to replace two beams has been considered.

COST SUMMARY	INITIAL COST	PRESENT WORTH RECURRING COSTS	PRESENT WORTH LIFE-CYCLE COST
ORIGINAL DESIGN	$ 137,606	$ 0	$ 137,606
ALTERNATIVE	$ 0	$ 0	$ 0
SAVINGS	$ 137,606	$ 0	$ 137,606

Illustrations

PROJECT:	Georgia Department of Transportation STP00-186-1(022) – P.I. No. 721770 SR 166 Widening Douglas/Fulton Counties	ALTERNATIVE NO.: **BR-5**
DESCRIPTION:	Demolish and Reconstruct Only 15' of Existing Bridge	SHEET NO.: **2** of **4**

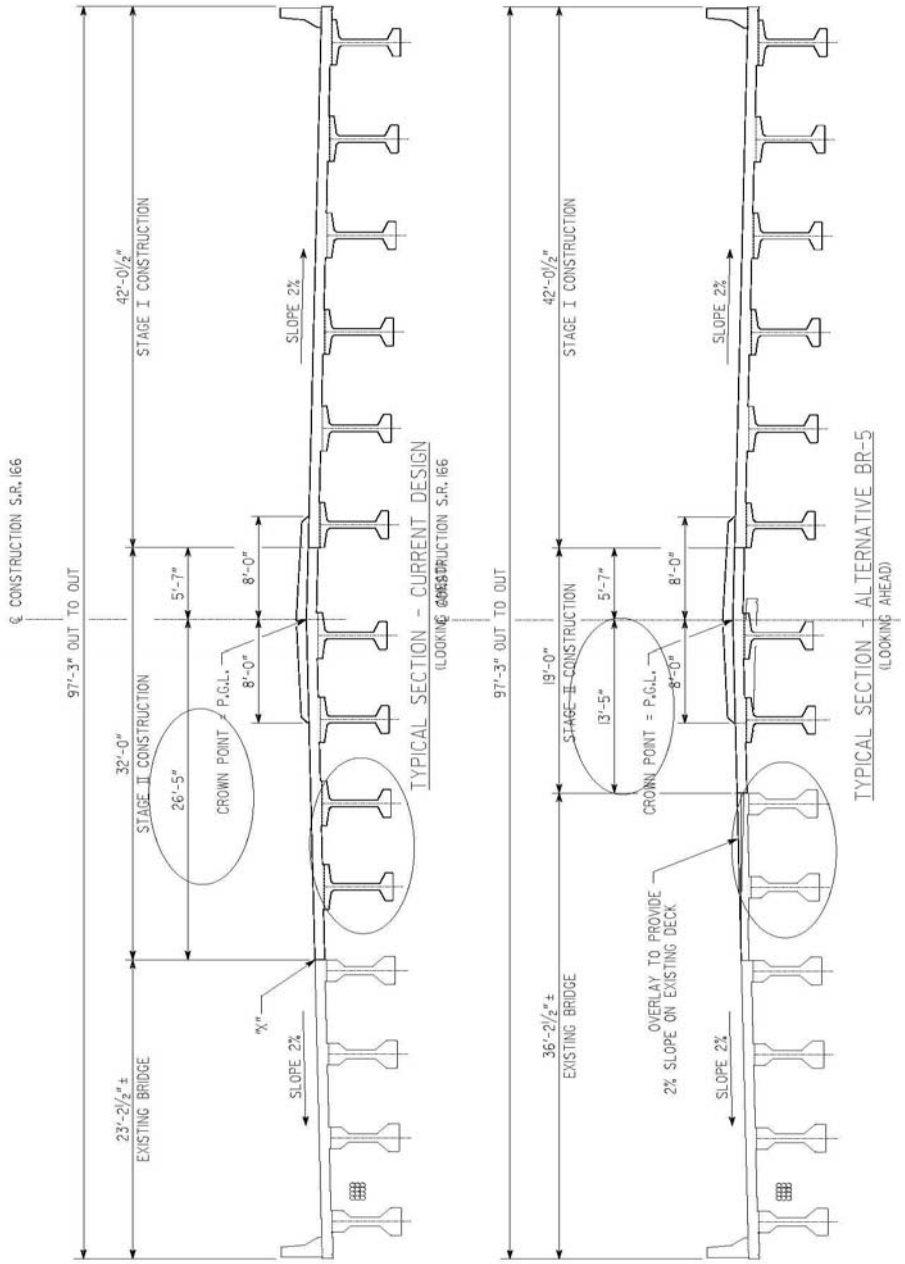

Calculations

PROJECT:	Georgia Department of Transportation STP00-186-1(022) – P.I. No. 721770 SR 166 Widening Douglas/Fulton Counties	ALTERNATIVE NO.: **BR-5**
DESCRIPTION:	Demolish and Reconstruct Only 15' of Existing Bridge	SHEET NO.: **3** of **4**

Note:

1) **Reduction from current design = savings for alternative**
2) **Cost per SF of new construction (assumed) = $100**
3) **Cost for Current Design as provided to the VE Team at the time of the study**

Current Design (6 Span – 540' Long – 90' Each Span, 97-3" Out-to-Out Bridge after 64'-1/2" of New Widening).

Current design also includes demolition and reconstruction of 26'-5" of the existing bridge deck and replacement of 4 existing beams.

Alternative Design (6 Span – 540' Long – 90' Each Span, 97-3" Out-to-Out Bridge after 64'-1/2" of New Widening with replacement of only two existing beams).

Total Length of each AASHTO Beam Line = 90' X 6 = 540' (approximate)

Savings in not replacing 2 interior Beams = 2 X 540' = 1080'(approximate)

Other treatments (assumed same for current design and alternative;, therefore, not considered).

NOTE:
A more detailed cost analysis may be performed on sufficiently developed alternative bridge plans to be able to itemize major components and realize greater cost savings than that shown in this study. Examples: Diaphragm concrete, deck concrete, grooving, etc.). Also, reduced demolition costs in alternative design are an additional saving.

Cost Worksheet

PROJECT:	**Georgia Department of Transportation** **STP00-186-1(022) – P.I. No. 721770** **SR 166 Widening** **Douglas/Fulton Counties**	ALTERNATIVE NO.:	**BR-5**
DESCRIPTION:	**Demolish and Reconstruct Only 15' of Existing Bridge**	SHEET NO.:	**4** of **4**

CONSTRUCTION ITEM		ORIGINAL ESTIMATE			PROPOSED ESTIMATE		
ITEM	UNITS	NO. OF UNITS	COST/ UNIT	TOTAL	NO. OF UNITS	COST/ UNIT	TOTAL
BT 54 Beams	LF	1,080	$ 116	$ 125,096	0	$ 116	$ -
Note: Reduction from current design = savings for alternative							
Lump Sum amount for current design as provided to the VE Team.							
Deck overlay for Alternative considered same as Deck reconstruction in Current design (conservative)							
Sub-total				$ 125,096			$ -
Cons't Mark-up	**10.00%**			$ 12,510			$ -
TOTAL				**$ 137,606**			**$ -**
Estimated Savings:							$137,606

2.3.5 ALTERNATIVE NUMBER RD-4

Value Analysis Design Alternative

PROJECT:	Georgia Department of Transportation STP00-186-1(022) – P.I. No. 721770 SR 166 Widening Douglas/Fulton Counties	ALTERNATIVE NO.:	**RD-4**
DESCRIPTION:	Reduce design speed to 45 mph and utilize an urban typical section	SHEET NO.:	**1** of **4**

Original Design:

The original design proposes constructing a "hybrid" typical section with 2' inside shoulders (2' paved), a 24' raised median, 12' travel lanes and 10' outside shoulders (6'-6" paved).

Alternative:

The alternative design would propose constructing an urban typical section. The typical section would be curb and gutter with a 20' raised median, 12' travel lanes, 4' bike lanes, and a 16' border area.

Opportunities:

- Reduce paving costs.
- Reduce Right-of-Way costs
- Reduce amount of overlap on future projects
- Reduce earthwork

Risks:

- None Apparent

Technical Discussion:
The reduction in design speed would require a re-evaluation of the speed study. The adjacent sections of SR-166 are signed for 55 mph however, with the character of the development in the area and the number of driveways a reduction in speed to 45 mph may be reasonable.

COST SUMMARY	INITIAL COST	PRESENT WORTH RECURRING COSTS	PRESENT WORTH LIFE-CYCLE COST
ORIGINAL DESIGN	$ 1,867,733	$ 0	$ 1,867,733
ALTERNATIVE	$	$ 0	$
SAVINGS	$ 1,867,733	$ 0	$ 1,867,733

Illustrations

PROJECT:	Georgia Department of Transportation STP00-186-1(022) – P.I. No. 721770 SR 166 Widening Douglas/Fulton Counties	ALTERNATIVE NO.: **RD-4**
DESCRIPTION:	Reduce design speed to 45 mph and utilize an urban typical section	SHEET NO.: **2** of **4**

CURRENT DESIGN - RURAL SECTION

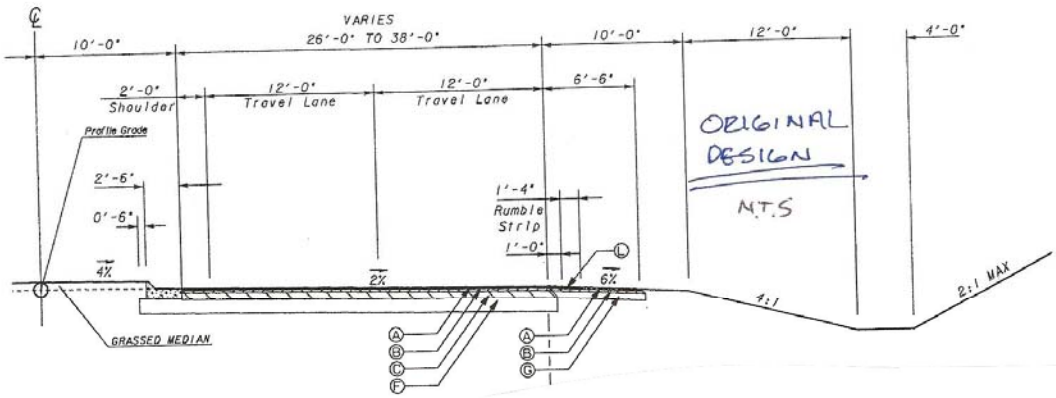

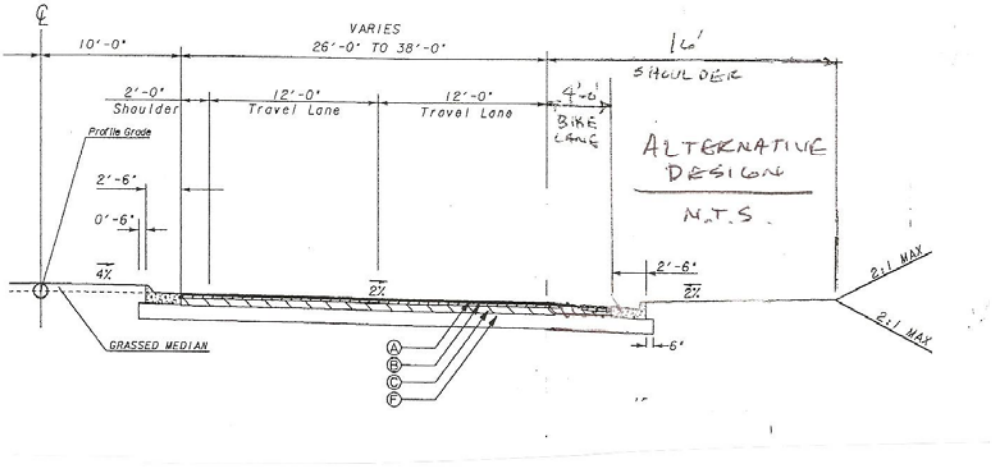

ALTERNATIVE DESIGN - TYPICAL URBAN SECTION

Calculations

PROJECT:	Georgia Department of Transportation STP00-186-1(022) – P.I. No. 721770 SR 166 Widening Douglas/Fulton Counties	ALTERNATIVE NO.: **RD-4**
DESCRIPTION:	Reduce design speed to 45 mph and utilize an urban typical section	SHEET NO.: **3** of **4**

Project Length- 3.309 miles x 5280 LF/mile => 17,472 LF

Right of Way-

Assume a reduction of 36' throughout the project based on a 12' reduction of the typical section backbone and an average of a 2:1 back-slope.

17,472 LF x 24 FT => 419,328 SF / 43,560 SF/Acre => 9.63 Acres

(9.63 AC / 41.29 AC) x $ 7,422,000 => $1,731,021

Right of way: Net cost	=	$1,731,021
Scheduling @ 55%	=	$ 952,062
Court cost @ 60%	=	$1,038,613
Total	=	$3,721,696

Paving-

Assume GAB quantities are unaffected, additional depth under the curb and gutter will offset the amount eliminated by deleting the shoulder paving.

Additional paving –
17,472 LF x 4 FT => 69,888 SF / 9 SF/SY => 7,765 SY
Superpave 25.0mm = [(7,765 SY) x 330#/SY-IN / (2000#/Ton)] => 1,282 TN

Reduced paving –
17,472 LF x 5 FT => 87,360 SF / 9 SF/SY => 9,707 SY
Superpave 12.5mm = [(9,707 SY) x 165#/SY-IN / (2000#/Ton)] => 801 TN
Superpave 19.0mm = [(9,707 SY) x 220#/SY-IN / (2000#/Ton)] => 1,068 TN

Drainage-

Curb and Gutter- 17,472 LF x 2 sides = 34,944 LF
Inlets- 34,944 LF / 300' spacing => 120 EA
Junction Boxes/Manholes => 20 EA
Storm Drain- Assume 1.5 x Project Length => 26,208 LF
Assume reduction in cross drain length is minor

Bridge-

12' x 540' = 6,480 SF

Cost Worksheet

PROJECT:	**Georgia Department of Transportation** **STP00-186-1(022) – P.I. No. 721770** **SR 166 Widening** **Douglas/Fulton Counties**	ALTERNATIVE NO.:	**RD-4**
DESCRIPTION:	**Reduce design speed to 45 mph and utilize an urban typical section**	SHEET NO.:	**4** of **4**

CONSTRUCTION ITEM		ORIGINAL ESTIMATE			PROPOSED ESTIMATE		
ITEM	UNITS	NO. OF UNITS	COST/ UNIT	TOTAL	NO. OF UNITS	COST/ UNIT	TOTAL
12.5 mm Superpave	TN	801	$ 61.24	$ 49,053	0	$ 61.24	$ -
19.0 mm Superpave	TN	1,068	$ 59.17	$ 63,194	0	$ 59.17	$ -
25.0 mm Superpave	TN	0	$ 55.37	$ -	1282	$ 55.37	$ 70,984
Right of Way	LS	1	$ 3,721,696	$ 3,721,696	0	$ -	$ -
Bridge	SF	6,480	$ 100.00	$ 648,000	0	$ 100.00	$ -
Curb & Gutter	LF	0	$ 11.35	$ -	34,944	$ 11.35	$ 396,614
Drop Inlet	EA	0	$ 2,506.71	$ -	120	$ 2,506.71	$ 300,805
Manhole/Junction Box	EA	0	$ 2,500.00	$ -	20	$ 2,500.00	$ 50,000
Storm Drain	LF	0	$ 75.00	$ -	26,208	$ 75.00	$ 1,965,600
							$ -
							$ -
							$ -
							$ -
							$ -
							$ -
Sub-total				$ 4,481,943			$ 2,784,004
Cons't Mark-up 10.00%				$ 448,194			$ 278,400
TOTAL				**$ 4,930,137**			**$ 3,062,404**
Estimated Savings:							$1,867,733

2.3.6 ALTERNATIVE NUMBER RD-9

Value Analysis Design Alternative

PROJECT:	Georgia Department of Transportation STP00-186-1(022) – P.I. No. 721770 SR 166 Widening Douglas/Fulton Counties	ALTERNATIVE NO.:	**RD-9**
DESCRIPTION:	Delete rumble strips, use 4' paved shoulder	SHEET NO.:	**1** of **4**

Original Design:

The original design proposes a 6'-6" paved shoulder separated by rumble strips from the travel lanes.

Alternative:

The alternative suggests eliminating the rumble strips and narrowing the paved shoulder to a 4' width.

Opportunities:

- Reduction in pavement quantities
- Reduction in construction effort

Risks:

- None Apparent

Technical Discussion:

COST SUMMARY	INITIAL COST	PRESENT WORTH RECURRING COSTS	PRESENT WORTH LIFE-CYCLE COST
ORIGINAL DESIGN	$ 2,056,399	$ 0	$ 2,056,399
ALTERNATIVE	$ 1,894,180	$ 0	$ 1,894,180
SAVINGS	$ 162,219	$ 0	$ 162,219

Illustrations

PROJECT:	Georgia Department of Transportation STP00-186-1(022) – P.I. No. 721770 SR 166 Widening Douglas/Fulton Counties	ALTERNATIVE NO.: **RD-9**
DESCRIPTION:	Delete rumble strips, use 4' paved shoulder	SHEET NO.: **2** of **4**

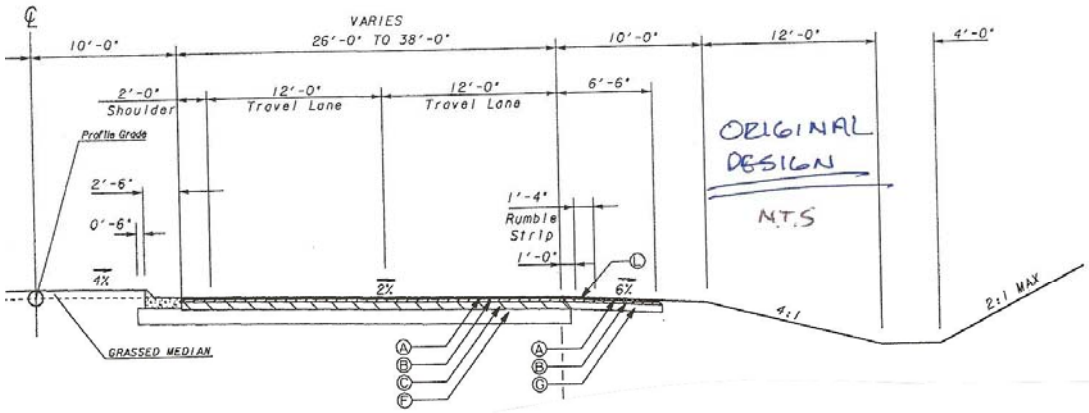

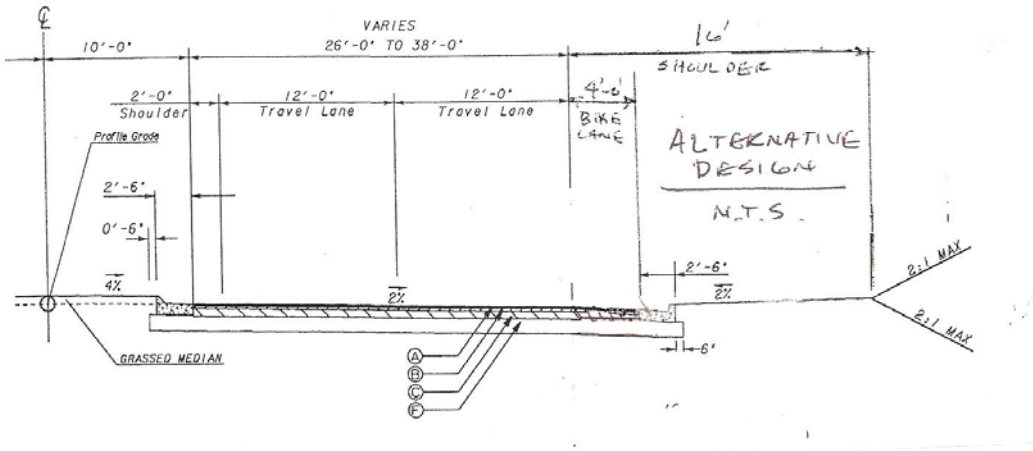

Calculations

PROJECT:	Georgia Department of Transportation STP00-186-1(022) – P.I. No. 721770 SR 166 Widening Douglas/Fulton Counties	ALTERNATIVE NO.: **RD-9**
DESCRIPTION:	Delete rumble strips, use 4' paved shoulder	SHEET NO.: **3** of **4**

Rumble strips +/- 6 GLM on project. Cost derived from GDOT Item Mean Summary dated 1/11/2010.

Reduce 6.5' paved shoulder to 4' paved shoulder throughout project.
STA 105+00- STA 186+50=8150 LF x 2 sides=16300LF x 2.5' width/9=4528 SY
STA 191+90-STA 240+00=4810 LF x 2 sides=9620LF x 2.5'width/9=2672 SY
STA 250+00-STA 280+00=3000 LF x 2 sides=6000LFx 2.5' width/9=1667 SY
Total= 8867 SY paved shoulder reduction

12.5mm Superpave- 165 lb/SY x 8867/2000=731.53 ton reduction
19mm Superpave- 220 lb/SY x 8867/2000=975.37 ton reduction
GAB-6"- 600LB/SY X 8867/2000=2660 ton reduction

Cost Worksheet

PROJECT: **Georgia Department of Transportation**
STP00-186-1(022) – P.I. No. 721770
SR 166 Widening
Douglas/Fulton Counties

ALTERNATIVE NO.: **RD-9**

DESCRIPTION: **Delete rumble strips, use 4' paved shoulder**

SHEET NO.: **4** of **4**

CONSTRUCTION ITEM		ORIGINAL ESTIMATE			PROPOSED ESTIMATE		
ITEM	UNITS	NO. OF UNITS	COST/ UNIT	TOTAL	NO. OF UNITS	COST/ UNIT	TOTAL
Indentation Rumble Strips	GLM	6	$ 988.60	$ 5,932	0	$ 988.60	$ -
GAB-6"	TN	57,000	$ 14.67	$ 836,190	54340	$ 14.67	$ 797,168
12.5mm Superpave	TN	7,500	$ 61.24	$ 459,300	6768	$ 61.24	$ 414,472
19mm Superpave	TN	9,600	$ 59.17	$ 568,032	8625	$ 59.17	$ 510,341
Sub-total				$ 1,869,454			$ 1,721,981
Cons't Mark-up 10.00%				$ 186,945			$ 172,198
TOTAL				**$ 2,056,399**			**$ 1,894,180**
Estimated Savings:							$162,219

2.3.7 ALTERNATIVE NUMBER RD-16

Value Analysis Design Alternative

PROJECT:	Georgia Department of Transportation STP00-186-1(022) – P.I. No. 721770 SR 166 Widening Douglas/Fulton Counties	ALTERNATIVE NO.:	**RD-16**
DESCRIPTIO	End Project at Station 271 + 11.60	SHEET NO.:	**1** of **4**

Original Design:

The original design proposes reconstructing and overlaying the roadway for approximately 1800' east of the pavement transitions for the intersection of SR 70.

Alternative:

The alternative design proposes shortening the project ~900' from Station 280+00 to Station 271 + 11.60

Opportunities:

- Reduce paving costs.
- Reduce Right-of-Way costs
- Reduce amount of overlap on future projects
- Reduce earthwork

Risks:

- None Apparent

Technical Discussion:
The profile grade can be slightly modified to allow the proposed profile to tie to the existing profile at the PVT for the last vertical curve.

COST SUMMARY	INITIAL COST	PRESENT WORTH RECURRING COSTS	PRESENT WORTH LIFE-CYCLE COST
ORIGINAL DESIGN	$ 331,456	$ 0	$ 331,456
ALTERNATIVE	$ 0	$ 0	$ 0
SAVINGS	$ 331,456	$ 0	$ 331,456

Illustrations

PROJECT: Georgia Department of Transportation
STP00-186-1(022) – P.I. No. 721770
SR 166 Widening
Douglas/ Fulton Counties

ALTERNATIVE NO.:

RD-16

DESCRIPT

SHEET NO.: **2** of **4**

End Project at Station 271 + 11.60

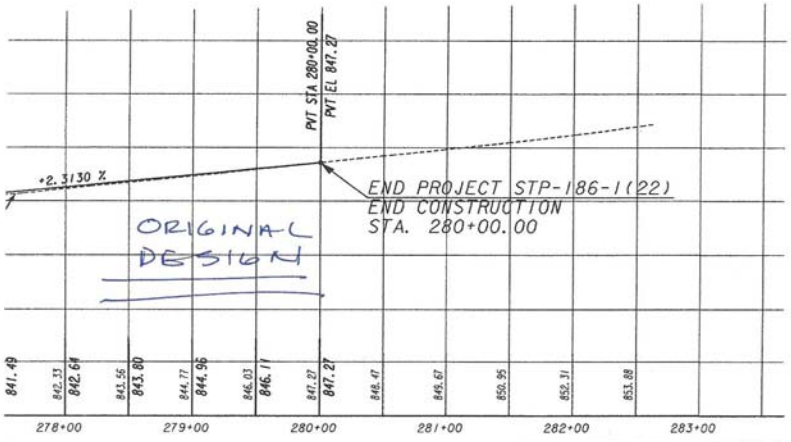

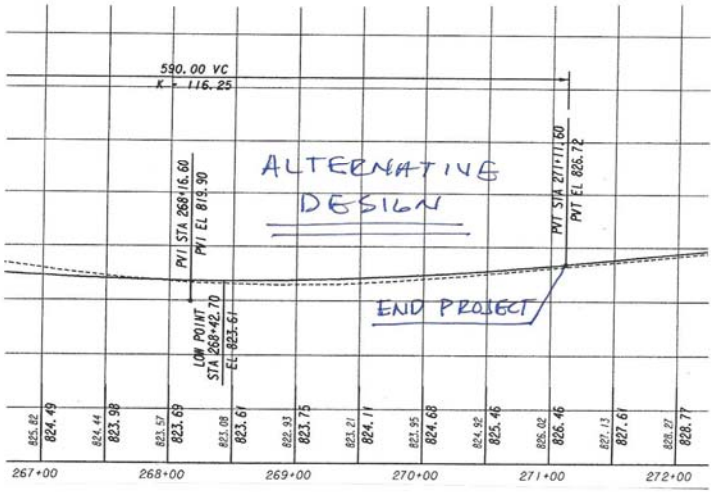

Calculations

PROJECT:	Georgia Department of Transportation STP00-186-1(022) – P.I. No. 721770 SR 166 Widening Douglas/Fulton Counties	ALTERNATIVE NO.: **RD-16**
DESCRIPTION:	End Project at Station 271 + 11.60	SHEET NO.: **3** of **4**

Station 280+00 – Station 271+12 => 890 LF

Right of Way-

Assume residential – Average width: 140' proposed / 80' existing
60' x 890' = 53,400 SF / 43,560 SF/AC => 1.25 Acres
1.25 AC x $100,000=> $125,000

Right of way: Net cost	=	$125,000
Scheduling @ 55%	=	$68,750
Court cost @ 60%	=	$75,000
Total	=	$268,750

Paving-

Wearing layer- (37' x 890') / (9 SY/SF) => 3,659 SY
Shoulder base- (13' x 890') / (9 SY/SF) => 1,286 SY (11,570SF)

Superpave 12.5mm = [(3,659 SY) x 165#/SY-IN / (2000#/Ton)] => 302 TN
Superpave 19.0mm = [(1,286 SY) x 220#/SY-IN / (2000#/Ton)] => 142 TN
6" GAB = (11,570SF SF) x (0.5 ft depth) x(135#/cf)) / (2000#/Ton)= 391 TN

Cost Worksheet

PROJECT: **Georgia Department of Transportation**
STP00-186-1(022) – P.I. No. 721770
SR 166 Widening
Douglas/ Fulton Counties

ALTERNATIVE NO.: **RD-16**

DESCRIPTION: **End Project at Station 271 + 11.60**

SHEET NO.: **4** of **4**

CONSTRUCTION ITEM		ORIGINAL ESTIMATE			PROPOSED ESTIMATE		
ITEM	UNITS	NO. OF UNITS	COST/ UNIT	TOTAL	NO. OF UNITS	COST/ UNIT	TOTAL
12.5 mm Superpave	TN	302	$ 61.24	$ 18,494	0	$ 61.24	$ -
19.0 mm Superpave	TN	141	$ 59.17	$ 8,343	0	$ 59.17	$ -
GAB	TN	391	$ 14.67	$ 5,736	0	$ 14.67	$ -
Right of Way	LS	1	$268,750	$ 268,750	0	$ -	$ -
							$ -
							$ -
							$ -
							$ -
							$ -
							$ -
							$ -
							$ -
							$ -
							$ -
							$ -
							$ -
							$ -
							$ -
Sub-total				$ 301,323			$ -
Cons't Mark-up 10.00%				$ 30,132			$ -
TOTAL				**$ 331,456**			**$ -**

Estimated Savings: $331,456

2.3.8 ALTERNATIVE NUMBER RD-24

Value Analysis Design Alternative

PROJECT:	Georgia Department of Transportation STP00-186-1(022) – P.I. No. 721770 SR 166 Widening Douglas/Fulton Counties	ALTERNATIVE NO.:	**RD-24**
DESCRIPTION:	Shorten vertical curve at PVI STA 136+09.68	SHEET NO.: **1** of **4**	

Original Design:

The original design shows a 1700' vertical curve from PVC STA 127+59.68 to PVT STA 144+59.68.

Alternative:

The alternative recommends shortening the vertical curve to 800'.

Opportunities:

- Reduction in ROW required
- Reduction in earthwork quantities

Risks:

- None Apparent

Technical Discussion:

The alternative proposes reducing the length of the vertical curve in question from 1700' to 800' to reduce the vertical profile grade a maximum of 5' in this section. The reduction in profile grade will also allow narrower slope ties to be made, reducing the width in ROW required in this area. See calculations sheet for alternative curve data.

COST SUMMARY	INITIAL COST	PRESENT WORTH RECURRING COSTS	PRESENT WORTH LIFE-CYCLE COST
ORIGINAL DESIGN	$ 27,086,983	$ 0	$ 27,086,983
ALTERNATIVE	$ 26,899,298	$ 0	$ 26,899,298
SAVINGS	$ 187,685	$ 0	$ 187,685

Illustrations

PROJECT:	Georgia Department of Transportation STP00-186-1(022) – P.I. No. 721770 SR 166 Widening Douglas/Fulton Counties	ALTERNATIVE NO.: **RD-24**
DESCRIPTION:	Shorten vertical curve at PVI STA 136+09.68	SHEET NO.: **2** of **4**

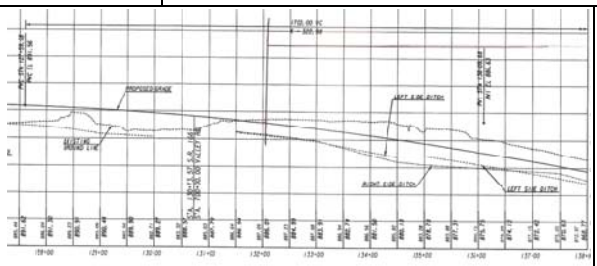

CURRENT DESIGN 1700' VC

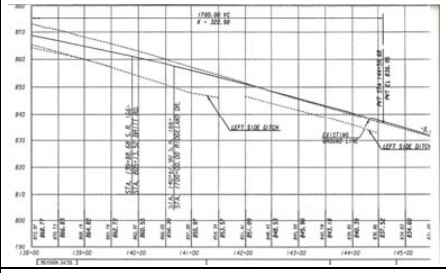

ALTERNATIVE DESIGN 800' VC

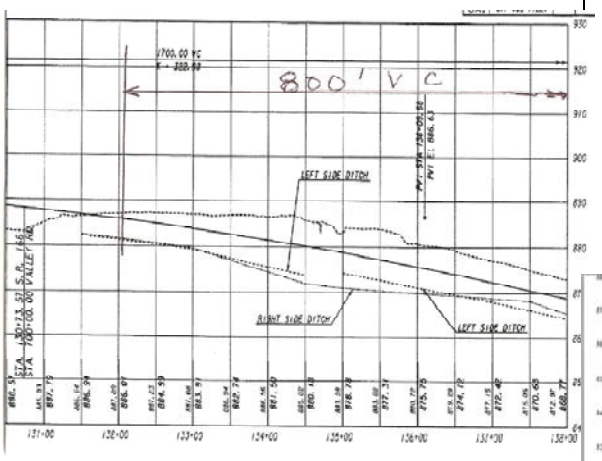

ALTERNATIVE DESIGN 800' VC

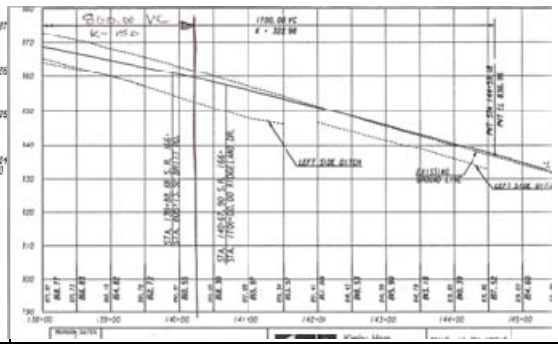

Calculations

PROJECT:	Georgia Department of Transportation STP00-186-1(022) – P.I. No. 721770 SR 166 Widening Douglas/Fulton Counties	ALTERNATIVE NO.: **RD-24**
DESCRIPTION:	Shorten vertical curve at PVI STA 136+09.68	SHEET NO.: **3** of **4**

ROW cost information gathered from Preliminary ROW Cost Estimate given to the team dated November 20, 2009. ROW savings include raw residential land cost burdened with scheduling contingency, and admin/court costs. No relocations or damages were assumed.

-Length= PVC STA 127+59.68 to PVT STA 144+59.68.=> 1700'
-Depth average- 0' at both ties, 5' max: 2.5' avg depth reduction by increasing profile grade.
-Average width of reduction=150' based on cross sections provided

Reduction in unclassified excavation:
1700' x 2.5' x 150'/27= 23,611 CY reduction in Unclassified Excavation.

Reduction in ROW required:
The shift in PGL averages 2.5' upward throughout 1700'. Slope ties average 2:1 on both left and right sides throughout this area. So, and average of 5' savings in ROW per side may be realized by making slope ties in shorter widths due to an increase in the profile grade line.
1700' length x 10' width= 17,000 SF/43,560 SF/AC=0.39 AC saved
0.39 AC x $100,000/AC= $39,000
Scheduling Contingency-55%= $21,450
Admin/Court Cost-60%= $36,270

TOTAL- $96,720 ROW cost savings

Curve Data:
Original-
PVI STA 136+09.68 EL.- 886.63
PVC STA 127+59.68 EL.- 891.56
PVT STA 144+59.69 EL.- 836.96
LC- 1700'
k-322.98
G1= -0.5802
G2= -5.8436

Alternative-
PVI STA 136+09.68 EL.- 886.63
PVC STA 132+09.68 EL.-888.95
PVT STA 140+09.68 EL.-863.26
LC- 800'
k= 151.99
G1= -0.5802
G2= -5.8436

Cost Worksheet

PROJECT: **Georgia Department of Transportation**
STP00-186-1(022) – P.I. No. 721770
SR 166 Widening
Douglas/Fulton Counties

ALTERNATIVE NO.: **RD- 24**

DESCRIPTION: **Shorten vertical curve at PVI STA 136+09.68**

SHEET NO.: **4** of **4**

CONSTRUCTION ITEM		ORIGINAL ESTIMATE			PROPOSED ESTIMATE		
ITEM	UNITS	NO. OF UNITS	COST/ UNIT	TOTAL	NO. OF UNITS	COST/ UNIT	TOTAL
Unclassified Excavation	CY	281,000	$ 3.13	$ 879,530	257,389	$ 3.13	$ 805,628
ROW required	LS	1	$ 23,745,000	$ 23,745,000	1	$ 23,648,280	$ 23,648,280
Sub-total				$ 24,624,530			$ 24,453,908
Cons't Mark-up	**10.00%**			$ 2,462,453			$ 2,445,391
TOTAL				**$ 27,086,983**			**$ 26,899,298**

Estimated Savings: $187,685

3 PROJECT DESCRIPTION

3.1 NEED AND PURPOSE

The project STP00-0186-01(022); PI#: 721770- SR 166 Widening, Douglas/Fulton Counties consists of the widening and reconstruction of SR 166 from Old Lower River Road in Douglas County to Fulton Industrial Boulevard/ SR 70 in Fulton County. The existing 2 and 3 lane rural roadway would be reconstructed to four 12-foot travel lanes divided by a 24-foot wide raised median with 10-foot wide shoulders (6.5 foot paved) left and right.

3.2 KICK-OFF PRESENTATION BY KIMLEY-HORN

Mr. Gary Newton, PE, Kimley-Horn & Associates, made a presentation to the VE Team on Monday morning the 13th, of the VE Study as part of the information phase. He described the project and its constraints. He discussed the environmental permitting status and needs of the project.

4 VALUE ENGINEERING PROCESS

4.1 WORK SHOP TEAM

PBS&J's Value Engineering (VE) team performed a VE study September 13-16, 2010 in the offices of Georgia Department of Transportation, Atlanta, Georgia. The team followed the SAVE International's six-step Value Engineering job plan as outlined in this section. The VE Study team consisted of the following members:

Les Thomas, P.E., CVS	Team Leader
Luke Clarke, P.E., AVS	Team Highway Design Engineer
Ramesh Kalvakaalva, P.E., AVS	Team Structural Engineer
Kevin Martin, Esq., AVS	Team Construction Specialist

4.2 SIX-STEP VALUE ENGINEERING JOB PLAN

The VE team followed the SAVE International's six-step Value Engineering job plan:

Information Phase
Function Analysis Phase
Creative Phase
Evaluation Phase
Development Phase
Presentation Phase

Information Phase— during this phase of the VE Team's work, the team received a briefing from the GDOT staff members and their design team, Kimley Horn. This briefing included discussions of the design intent behind the project, the cost concerns, and the physical project limitations. In the working session that followed, the VE team developed cost models from the cost data provided by the designers and familiarized themselves with the construction drawings and other data that was made available to the team. The VE Team then visited the project site.

Function Analysis Phase— during this phase the VE Team determined the "**Functions**" of the project. This was accompanied by reviewing the project by asking the questions such as: "*what is the project supposed to do?"* and "*how is it supposed to accomplish this purpose"* In the Value Engineering vernacular, the answers to these questions are cast in the form of active verbs and measurable nouns. These verb/noun pairs form the basis of the function analysis that distinguishes a Value Engineering effort from a potentially damaging cost-cutting exercise. A Functional Analysis System Technique (FAST) diagram was prepared highlighting the projects required functions.

Creative Phase — The VE Team performed a brainstorming session to identify ideas that might help meet the project objectives. These ideas fell into the following major headings:

- Roadway Vertical and Horizontal Alignment
- Bridge
- Right-of-Way
- The brainstorming session identified thirty (30) ideas. See page 1-7 for listing.

Evaluation Phase— Once the VE team identified the creative ideas, it was necessary to decide which alternatives should be carried forward. This is the work of the Evaluation or Judgment phase. The VE team reflected back on the project constraints and objectives shared with the team by the owner's representatives and the design team members. This guidance emerged on the first day of the study at the kick-off meeting. From that guidance, the team was able to select ideas that they believed would improve the project by a matrix process. The VE team used the following values as measures of whether or not an alternative had enough merit to be carried forward in the VE process:

- First Costs
- Permit-ability
- Constructability
- Reliability
- Operating Costs

Development Phase— During this phase, the VE team developed each of the selected alternatives whose score was 4 or higher because of time constraints. This effort included a detailed explanation of the idea with sketches as appropriate to clarify the idea from the original concept, advantages and disadvantages, a technical explanation and an estimation of the cost and resultant savings if implemented (see the tabbed section titled ***Study Results***).

Presentation Phase— As noted earlier, the team made an informal "out-briefing" on the last day of the workshop. This presentation was designed to inform the owners and the designers of the initial findings of the VE study. This written report is intended to formalize those findings.

The following is a flow chart that represents the work done prior to, during, and after the VE workshop is completed on site:

Source: SAVE International

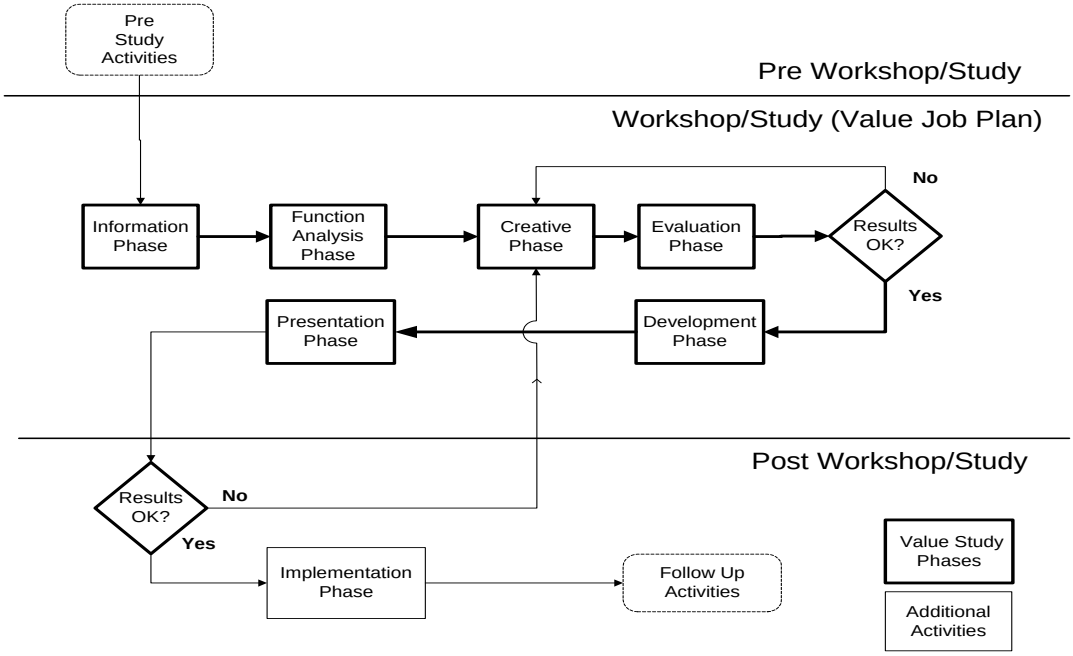

Figure 4-1 – Value Engineering Job Plan

4.3 VE WORKSHOP AGENDA

VALUE ENGINEERING STUDY AGENDA

SR 166 Widening Douglas/Fulton Counties

September 13-16, 2010

Pre-Workshop Activities VE team leader organizes study coordinates with the owner and designer to attain the project objectives and materials necessary. The VE team receives and reviews all project documents. The team develops a Pareto chart and/or cost model for the project.

Day One

9:00-10:30 Design Team Presentation (Information Phase)
Introduction of participants, owner, designer, and VE team members
Presentation of the project by the design engineer including:

- History and background
- Design Criteria and Constraints
- Special needs
- Current Construction Completion Schedule
- Project Cost Estimate if available and Budget Constraints

Owner Presentation – special requirements, definition of life-cycle period and interest rate for life-cycle costs
Review VE Pareto chart/cost model
Discussion, questions and answers
Overview of the VE process and agenda – Workshop goals and project goals

10:30-12:00 VE Team reviews project (Information Phase)
Review design team's presentation
Review agenda and goals of the study
Visit project site

1:00-2:30 Function Analysis Phase
Analyze Cost Model – Pareto
Identify basic and secondary functions
Complete Function Matrix/FAST diagram

2:30-5:00 Creative Phase
Brainstorming of alternative ideas

Day Two

8:00-10:00 Evaluation Phase
Establish criteria for evaluation
Rank ideas

- Identify "best" ideas for development
- Identify those ideas that will become design suggestions
- Identify a "champion" for each idea to be developed

10:00-5:00 Development Phase
Develop alternative ideas design suggestions with assessment of original design and write up new alternatives including:

- Opportunities and risks
- Illustrations
- Calculations
- Cost worksheets
- Life-cycle cost analysis

Day Three

8:00-5:00 Development Phase
Continue developing alternative ideas
Continue developing design suggestions
Prepare for presentation to owners and designers

Day Four

8:00-5:00 Development Phase
Continue developing alternative ideas
Continue developing design suggestions
Prepare for presentation to owners and designers

Day Five

8:00-9:00 Prepare presentation

9:00-10:00 VE team presentation

4.4 CONSTRUCTION CAPITAL COST ESTIMATE

The VE Team was provided with a construction cost estimate dated August 30, 2010. A estimate of the right-of-way acquisition cost was also given to the team. The team used this information to concentrate its efforts towards the area of the project having the least value.

4.5 PARETO CHARTS

PARETO CHART - COST HISTOGRAM

PROJECT: **Georgia Department of Transportation**
STP00-0186-01(022) - P.I. No. 721770
Douglas/Fulton Counties

PROJECT ELEMENT	COST	PERCENT	CUM. PERCENT
Bridge	3,400,000	30.84%	30.84%
Asphalt Concrete	3,097,470	28.10%	58.93%
Unclassified Excavation	879,530	7.98%	66.91%
Base	836,190	7.58%	74.50%
Storm Drain Pipes	574,055	5.21%	79.70%
Clearing & Grubbing	400,000	3.63%	83.33%
Curb & Gutter	353,200	3.20%	86.54%
Erosion Control Items-Temporary	234,454	2.13%	88.66%
Found Backfill	194,500	1.76%	90.43%
Miscellaneous Roadway Items	153,284	1.39%	91.82%
Traffic Control	150,000	1.36%	93.18%
Signing & Marking Items	140,213	1.27%	94.45%
Guardrails	123,032	1.12%	95.56%
Catch Basin	112,252	1.02%	96.58%
Miscellaneous Drainage Items	95,436	0.87%	97.45%
Erosion Control Items-Permanent	78,582	0.71%	98.16%
Concrete Approach Slab	75,603	0.69%	98.85%
Field Engineers Office	64,657	0.59%	99.43%
Concrete Sidewalk	62,425	0.57%	100.00%
Subtotal not including ROW costs	**$ 11,024,883**	**100.00%**	
E & C Rate @ 10%	**$ 1,102,488**		
Subtotal =	**$ 12,127,371**		
Total Construction Cost =	**$ 12,127,371**		
Right-of-Way =	**$ 23,745,000**		
Reimb. Utilities =	**$ 717,868**		
TOTAL	**$ 36,590,239**	**Comp Mark-up:**	10%

Pareto - SR 166 Widening; Douglas/Fulton Counties

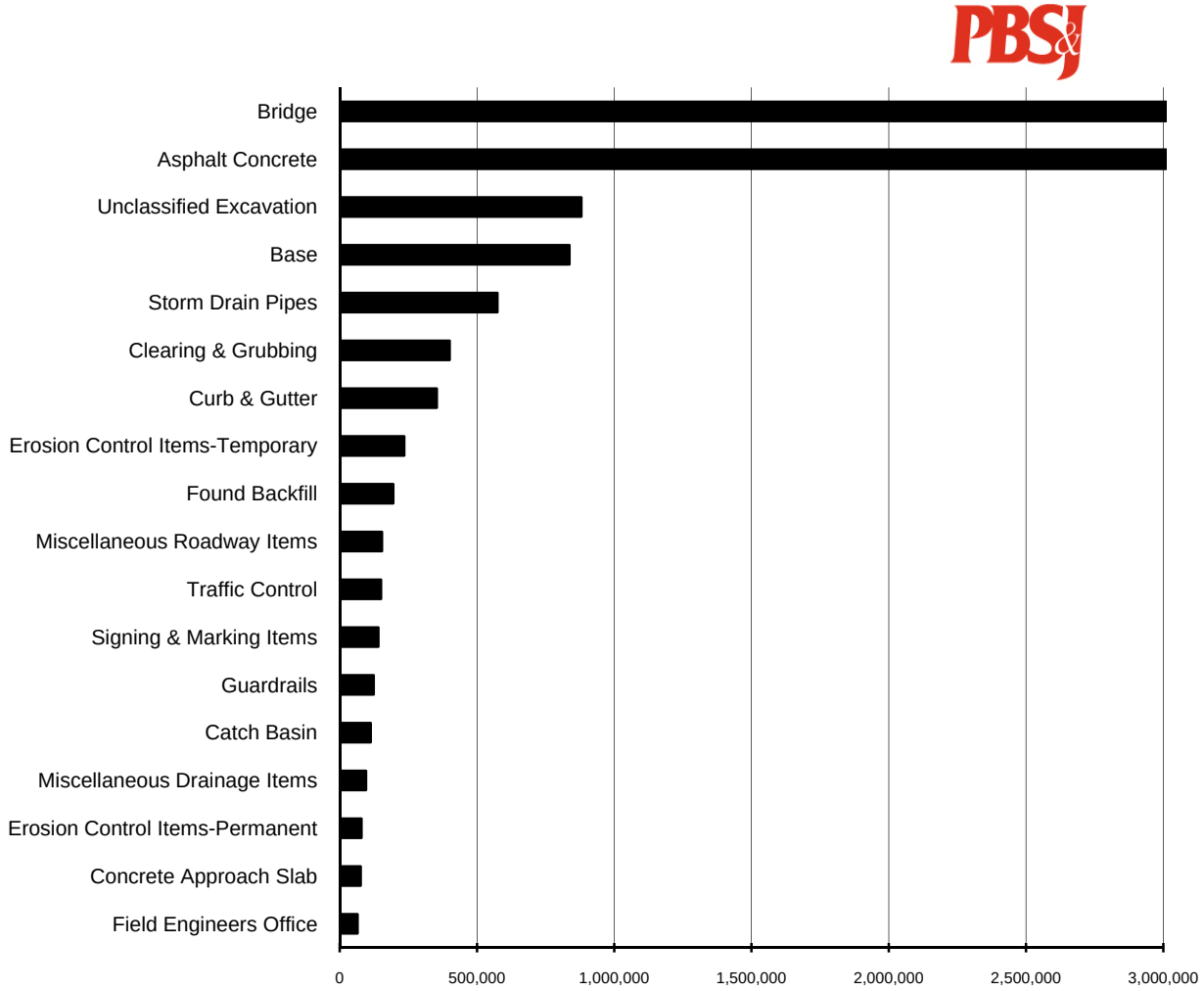

4.6 FUNCTIONAL ANALYSIS SYSTEM TECHNIQUE (FAST) DIAGRAM

FUNCTIONAL ANALYSIS SYSTEMS TECHNIQUE (FAST)

SR-166 Widening

Project No. STP00-0186-01(022); PI#: 721770

Georgia Department of Transportation

Douglas/Fulton Counties

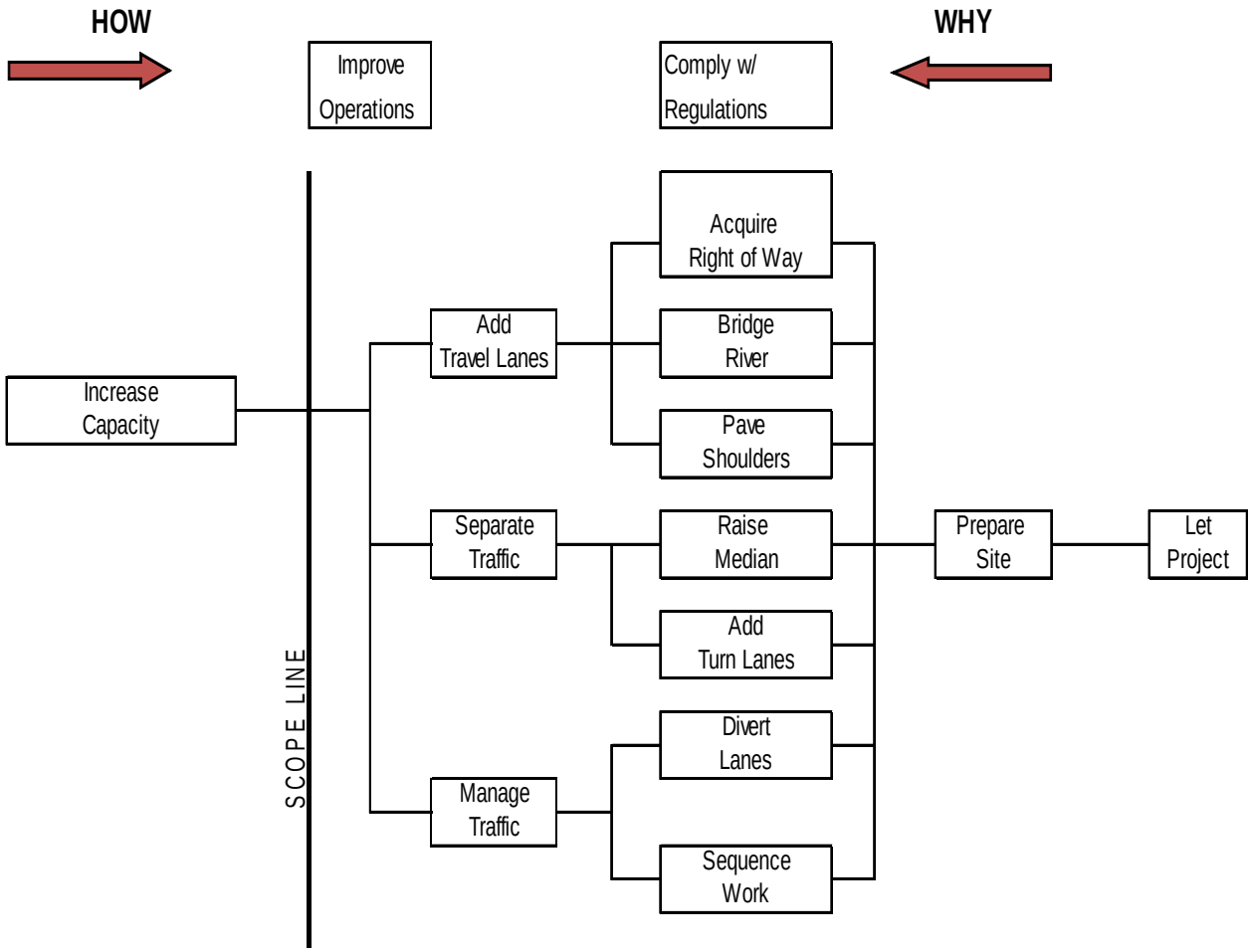

4.7 ATTENDANCE SHEET FOR DESIGNERS AND VE TEAM PRESENTATIONS

DESIGNER PRESENTATION

Geogia Department of Transportation	MEETING PARTICIPANTS	September 13, 2010

STP00-0186-01(022) - P.I. No. 721770 Douglas/Fulton Counties

NAME		ORGANIZATION & TITLE	E-MAIL	PHONE
Matt Sanders	GDOT Keeping Georgia on the Move	GDOT-Engineering Services	msanders@DOT.GA.GOV	404-631-1752
Ken Werho	GDOT Keeping Georgia on the Move	GDOT-Traffic Operations	kwerho@dot.ga.gov	404-635-8144
Bill DuVall	GDOT Keeping Georgia on the Move	GDOT-Bridge Design	bduvall@dot.ga.gov	404-631-1883
Krystal Stovall-Dixon	GDOT Keeping Georgia on the Move	GDOT-Program Delivery	kstovall-dixon@dot.ga.gov	404-631-1572
Gary Newton		Kimley-Horn	gary.vewton@kimley-horn.com	678-533-3902
Michael K. Hill	GDOT Keeping Georgia on the Move	GDOT-D7A3	mkhill@dot.ga.gov	404-559-6699
Luke Clarke	PBS&J	PBS&J	lwclarke@pbsj.com	205-969-3776
Kevin Martin	PBS&J	PBS&J	klmartin@PBSJ.com	205-969-2776
Ramesh Kalvakaalva	CSI	Civil Services, Inc.	rameshk@civilservicesinc.com	770-312-2019
Les Thomas	PBS&J	PBS&J	lmthomas@pbsj.com	678-677-6420
Sam Pugh	GDOT Keeping Georgia on the Move	GDOT-Environmental Services	spugh@dot.ga.gov	404-631-1167

VE TEAM PRESENTATION

Geogia Department of Transportation	MEETING PARTICIPANTS			September 16, 2010
STP00-0186-01(022) - P.I. No. 721770 Douglas/Fulton Counties				
NAME		ORGANIZATION & TITLE	E-MAIL	PHONE
Lisa L. Myers	GDOT Keeping Georgia on the Move	GDOT-Engineering Services	lmyers@dot.ga.gov	404-631-1770
Matt Sanders	GDOT Keeping Georgia on the Move	GDOT-Engineering Services	msanders@dot.ga.gov	404-631-1752
Ron Wishon	GDOT Keeping Georgia on the Move	GDOT-Engineering Services	rwishon@dot.ga.gov	404-631-1753
Krystal Stovall-Dixon	GDOT Keeping Georgia on the Move	GDOT-Program Delivery	kstovall-dixon@dot.ga.gov	404-631-1572
Gary Newton		Kimley-Horn	gary.vewton@kimley-horn.com	678-533-3902
Luke Clarke	PBS&J	PBS&J	lwclarke@pbsj.com	205-969-3776
Kevin Martin	PBS&J	PBS&J	klmartin@PBSJ.com	205-969-2776
Ramesh Kalvakaalva	CSI	Civil Services, Inc.	rameshk@civilservicesinc.com	770-312-2019
Les Thomas	PBS&J	PBS&J	lmthomas@pbsj.com	678-677-6420