D.O.T. 66

DEPARTMENT OF TRANSPORTATION
STATE OF GEORGIA

INTERDEPARTMENT CORRESPONDENCE

FILE FR-074-2(21) and BHF-074-2(22)
Clayton/Fayette Counties
P. I. Nos. 721290 and 721295

OFFICE Preconstruction

DATE March 17, 1989

FROM R. L. Alston, P.E., Assistant Director of Preconstruction

TO Paul Mullins, District Engineer - Atlanta

SUBJECT NOTICE OF LOCATION AND DESIGN APPROVAL

Attached for your further handling is the approved Location and Design Report on the above subject project.

Also attached is the Notice of Location and Design Approval. This is your authorization to proceed with advertisement.

RLA:cj

Attachment

cc: Charles Lewis
Bob Humphrey
Frank Danchetz
Gene Skeen
Walker Scott
Paul Liles

D.O.T. 66

DEPARTMENT OF TRANSPORTATION
STATE OF GEORGIA

INTERDEPARTMENT CORRESPONDENCE

FILE FR-074-2(21) ~~Fayette/Clayton~~ Clayton/Fayette Counties
BHF-074-2(22) Fayette/Clayton Counties
P.I. Nos. 721290 & 721295

OFFICE Atlanta, Georgia

DATE March 3, 1989

FROM Walker W. Scott, Jr., P.E., State Road & Airport Design Engineer WWS/DHE

TO Alva R. Byrom, P.E., State Highway Engineer

SUBJECT LOCATION AND DESIGN REPORT APPROVAL

DESCRIPTION: SR 85 widening from SR 279 in Fayette County north 4.1 miles to Roberts Drive in Clayton County. Widen existing bridges at Camp Creek.

PROJECT PROPOSAL: Add one lane in each direction on the outside to the existing four lanes. Retain the existing 40 foot wide grassed median.

ESTIMATED COST:	Constr/Infl/E&C	R/W	TOTAL
APPROVED: (FR-074-2(21)	$ 3,440,000 ✓	$ 1,600,000 ✓	$ 4,746,000
CURRENT	$ 4,183,000 ✓	$ 1,600,000	$ 5,783,238
Current: (BHF-074-2(22)	$ 294,000 ✓	$ 0	$ 294,000
Approved:	$ 294,000 ✓	$ 0	$ 294,000

LGPA requested for utilities 1-5-88.

CONCEPT APPROVAL DATE: ✓ September 29, 1988

CONCEPT UPDATE: ✓ N/A

ENVIRONMENTAL ASSESSMENT APPROVAL DATE: ✓ February 17, 1989

PUBLIC HEARING RESULTS: ✓ 57 Attended; 4 Opposed; 39 Supported; 1 Uncommitted/Conditional.

RECOMEMNDATIONS: ✓ That we approve this project Location and Design and that the attached "Notice" be approved for advertising.

ATTACHMENTS: Sketch Map, Typical Section, Cost Estimate, Notice.

RECOMMEND: G. C. Lewis
G. Charles Lewis, Director of Preconstruction

APPROVED: Alva R Byrom
Alva R. Byrom, State Highway Engineer

NOTICE OF LOCATION AND DESIGN APPROVAL

PROJECT: FR-074-2(21) Fayette/Calyton Counties
BHF-074-2(22) Fayette/Clayton Counties
P.I. Nos. 721290 & 721295

NOTICE is hereby given that the Georgia Department of Transportation has approved the Location and Design of the above projects.

Projects FR-074-2(21) and BHF-074-2(22), Fayette/Clayton Counties, provide for the roadway and bridge widening of SR 85 from two lanes in each direction to three lanes in each direction from SR 279 north 4.1 miles to Roberts Drive.

The existing forty-foot wide grassed median will be retained; the new travel lanes will be added to the outside.

The purpose fo these projects is to provide for additional travel capacity and to improve safety.

Drawings of the proposed projects are on file and are available for public inspection at the Georgia Department of Transportation, Room 444, No. 2 Capitol Square, Atlanta, Georgia 30334.

Any written request in reference to this Notice may be referred to:

Walker W. Scott, Jr., P.E.
State Road & Airport Design Engineer
GEORGIA DEPARTMENT OF TRANSPORTATION
Room 444
No. 2 Capitol Square
Atlanta, Georgia 30334-1002

Telephone: (404) 656-5386

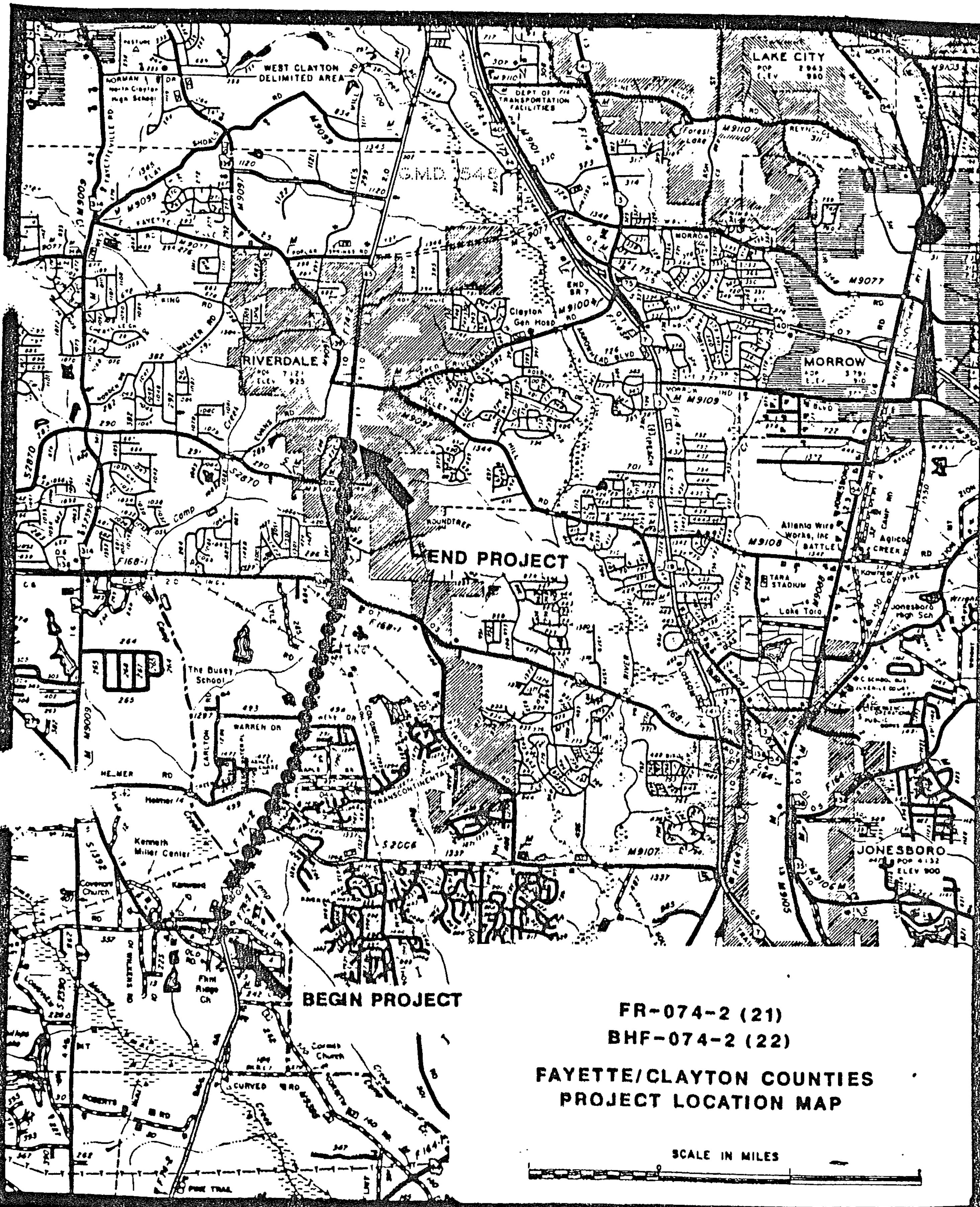
FR-074-2 (21)
BHF-074-2 (22)
FAYETTE/CLAYTON COUNTIES
PROJECT LOCATION MAP
SCALE IN MILES
BEGIN PROJECT
END PROJECT
LAKE CITY
RIVERDALE
MORROW
JONESBORO
WEST CLAYTON DELIMITED AREA
DEPT OF TRANSPORTATION FACILITIES
Clayton Gen Hosp
The Busey School
Kenneth Miller Center
Atlanta Wire Works, Inc
TARA STADIUM
Lake Tara
Jonesboro High Sch
TRANSCONTINENTAL
HELMER RD
WARREN DR
ROUNDTREE
BATTLE CREEK
G.M.D. 1548

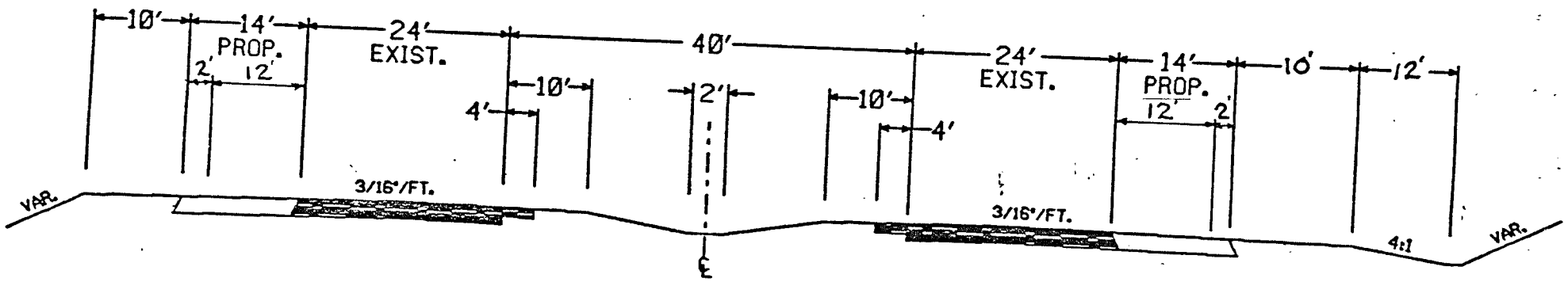

TYPICAL CROSS SECTION
PROJECT FR-074-2(21)
FAYETTE-CLAYTON COUNTIES

PRELIMINARY COST ESTIMATE

DATE ~~7-26-88~~ MAR 3, 1989

PROJECT NO. BHF-074-2(22) FAYETTE-CLAYTON

P.I. NO. 721295

PROJECT DESCRIPTION WIDEN EXIST BRIDGE ON OUTSIDE ONLY OF NBL ON S.R 85 @ CAMP CREEK

PROPOSED CONCEPT

EXISTING ROADWAY (If Applicable)

TRAFFIC: Existing Design

( ) PROGRAMMING PROCESS ( ) CONCEPT DEVELOPMENT ( ) DURING PROJECT DEVELOPMENT

PROJECT COSTS

A. RIGHT OF WAY

1. PROPERTY (Land and Easements) $
2. DISPLACEMENTS $
3. OTHER COSTS $

SUBTOTAL $

B. REIMBURSABLE UTILITIES

1. RAILROAD $
2. TRANSMISSION LINES $
3. SERVICES $

SUBTOTAL $

C. MAJOR STRUCTURES

1. WALLS $
2. BRIDGE STREAM CROSSINGS 163 X 30 X 50.00 NBL ONLY Camp CR ~~163 x 52.5 x 60~~ $ ~~513,450.00~~ 244,500.00
3. BRIDGE OVER/UNDERPASS $
4. BOX CULVERTS $

SUBTOTAL $

D. GRADING AND DRAINAGE

1. EARTHWORK $ _____

2. DRAINAGE

a. Cross Drain Pipes (exc. box culverts) $ _____

b. Curb and Gutter $ _____

c. Longitudinal System (Incl. Catch Basins) $ _____

SUBTOTAL $ _____

E. BASE AND PAVING

1. AGGREGATE BASE $ _____

2. ASPHALT PAVING $ _____

3. CONCRETE PAVING $ _____

4. OTHER $ _____

SUBTOTAL $ _____

F. LUMP ITEMS

1. TRAFFIC CONTROL $ _____

2. CLEARING AND GRUBBING $ _____

3. LANDSCAPING $ _____

4. EROSION CONTROL $ _____

5. DETOURS (Incl. Temp. Bridges) $ _____

SUBTOTAL $ _____

G. MISCELLANEOUS

1. LIGHTING $ _____

2. SIGNING - STRIPING $ _____

3. GUARDRAIL $ _____

4. OTHER $ _____

SUBTOTAL $ _____

H. SPECIAL FEATURES $ _____

ESTIMATE SUMMARY

A. RIGHT OF WAY $ _____

B. REIMBURSABLE UTILITIES $ _____

CONSTRUCTION COST SUMMARY

C. MAJOR STRUCTURES $ ~~513,450.00~~ $244,500.00

D. GRADING AND DRAINAGE $ _____

E. BASE AND PAVING $ _____

F. LUMP ITEMS $ _____

G. MISCELLANEOUS $ _____

H. SPECIAL FEATURES $ _____

SUBTOTAL CONSTRUCTION COST $ ~~513,450.00~~ $244,500.00

E. & C. (10%) $ ~~51,345.00~~ $24450.00

(24R) INFLATION (5% per year) $ ~~51,345.00~~ $24450.00

TOTAL CONSTRUCTION COST $ ~~616,140.00~~ $293,400.00

GRAND TOTAL PROJECT COST $ ~~616,140.00~~ $293,400.00

PRELIMINARY COST ESTIMATE

DATE ~~9-26-88~~ MAR 3, 1989

PROJECT NO. FR-074-2(21) FAYETTE-CLAYTON

P.I. NO. 721 290

PROJECT DESCRIPTION ADD ONE 14' LN IN EACH DIRECTION ON THE OUTSIDE OF THE EXIST 4 LN ROADWAY, RETAIN 40' MEDIAN AND WIDEN EXIST. SBL BRIDGE @ CAMP CREEK ON THE OUTSIDE (Project EXTENDS FROM SR 279 TO ROBERTS DR) 4.1 MILES – 1 1/2" OVERLAY

PROPOSED CONCEPT

EXISTING ROADWAY (If Applicable) 4 LNS WITH 40' MEDIAN

TRAFFIC: Existing Design

( ) PROGRAMMING PROCESS ( ) CONCEPT DEVELOPMENT ( ) DURING PROJECT DEVELOPMENT

PROJECT COSTS

A. RIGHT OF WAY

1. PROPERTY (Land and Easements) $
2. DISPLACEMENTS $
3. OTHER COSTS $

SUBTOTAL $

B. REIMBURSABLE UTILITIES

1. RAILROAD $
2. TRANSMISSION LINES $
3. SERVICES $

SUBTOTAL $

C. MAJOR STRUCTURES

1. WALLS $
2. BRIDGE STREAM CROSSINGS 163 x 13 x 50.00 $ ~~102,060.00~~ 105,950.00
   SBL ONLY CAMP CR. ~~162 x 10.5 x 60.00~~ =
3. BRIDGE OVER/UNDERPASS $
4. BOX CULVERTS $ 14147.00

SUBTOTAL $ ~~116,207.00~~ 120,097.00

D. GRADING AND DRAINAGE

1. EARTHWORK — UNC EXC = 20000 x 3.00 = 60,000.00; BOR = 125,000 x 3.00 = 375,000.00 — $ 435,000.00

2. DRAINAGE

a. Cross Drain Pipes (exc. box culverts) — $ 53352.00

b. Curb and Gutter — $ 76,000.00

c. Longitudinal System (Incl. Catch Basins) — $ 52,000.00

SUBTOTAL — $ 616,352.00

E. BASE AND PAVING

1. AGGREGATE BASE — 51762 — $ 595,263.00

12" Gr. Aggr ~~45300~~ x $11.50 / TON = $ ~~520,950.00~~

2. ASPHALT PAVING 50533 — $ 2,021,320.00

(1 1/2" ~~1 1/2~~ OVERLAY) 9 1/4" ASPHALT ~~34827~~ x 40.00 / TON = $ ~~1,393,080.00~~

3. CONCRETE PAVING — $

4. OTHER — $

SUBTOTAL — $ 2,616,583.00 ~~1,914,030.00~~

F. LUMP ITEMS

1. TRAFFIC CONTROL — $ 50,000.00

2. CLEARING AND GRUBBING — $ 28,000.00
40 Acs @ 700.00

3. LANDSCAPING — $

4. EROSION CONTROL — $

5. DETOURS (Incl. Temp. Bridges) — $

SUBTOTAL — $ 78,000.00

G. MISCELLANEOUS

1. LIGHTING — $

2. SIGNING - STRIPING — $ 35,000.00

3. GUARDRAIL — $ 20,000.00
2000' @ 10.00

4. OTHER — $

SUBTOTAL — $ 55,000.00

H. SPECIAL FEATURES — $

ESTIMATE SUMMARY

A.	RIGHT OF WAY	$ NOT AVAILABLE
B.	REIMBURSABLE UTILITIES	$ " " COUNTY FUNDED

CONSTRUCTION COST SUMMARY

C.	MAJOR STRUCTURES	$ ~~116,207.00~~	120,097.00
D.	GRADING AND DRAINAGE	$ 616,352.00	
E.	BASE AND PAVING	$ 1,914,030.00	2,616,583.00
F.	LUMP ITEMS	$ 78,000.00	
G.	MISCELLANEOUS	$ 55,000.00	
H.	SPECIAL FEATURES	$	
	SUBTOTAL CONSTRUCTION COST	$ ~~2,779,589.00~~	3,486,032.00
	E. & C. (10%)	$ ~~277,959.00~~	348,603.00
	2 yrs INFLATION (5% per year)	$ ~~277,959.00~~	348,603.00
	TOTAL CONSTRUCTION COST	$ ~~3,335,507.00~~	4,183,238.00
	GRAND TOTAL PROJECT COST		$ 4,183,238.00 ~~$ 3,335,507.00~~

R/W Cost Est.

Rodney R. Tarrer

DATE OF ESTIMATE: 8/4/88 BY: L.E. Pachoud, Jr.

TYPE ESTIMATE: Preliminary

PROJECT: FR-074-2(21)Fayette-Clayton (SR 85)

P.I.

EXISTING R/W 170' REQUIRED R/W Variable (177' - 197')

ESTIMATED NUMBER OF PARCELS: 30±

PROJECT TERMINI: SR 279 - South End

Roberts Drive - North End

PROJECT DESCRIPTION: Widening of SR 85

Estiamted Length - 4 miles ±

TYPE OF LAND USE: Commercial VALUE APPLIED S.F. BASIS: $6.00

145,000 s.f. @ $6.00/s.f. $ 870,000.00

TOTAL LAND COST: $ 870,000.00

IMPROVEMENTS IMPACTED AND COST: (IF APPLICABLE) Total $ 93,500.00

1 mobile home $15,000.00; 1 - Flag Monopole Outdr. Adv. Sign $35,000.00;

Store & canopy with 4 pumps $40,000.00

1 - 10 x 36 Outdr. Adv. Sign $3,500.00

RELOCATION COST: (IF APPLICABLE) Total $ 45,000.00

2 Units @ $22,500 each

CONSEQUENTIAL DAMAGES: (IF APPLICABLE)

NET COST $1,008,500.00

ADM./COURT COST FACTOR 45 % SAY $ 453,800.00

INFLATION FACTOR 10 % $ 146,200.00

TOTAL COST $1,608,500.00