ORIGINAL TO GENERAL FILES

D.O.T. 66

DEPARTMENT OF TRANSPORTATION
STATE OF GEORGIA

INTERDEPARTMENT CORRESPONDENCE

FILE P. I. Nos. 720815- / 720817-, Clayton County
STP-037-2(54) / BHF-037-2(55)
SR 42 Widening

OFFICE Preconstruction

DATE March 23, 2006

FROM for Margaret B. Pirkle, P.E., Assistant Director of Preconstruction

TO SEE DISTRIBUTION

SUBJECT **APPROVED PROJECT CONCEPT REPORT**

Attached for your files is the approval for subject project.

MBP/cj

Attachment

DISTRIBUTION:

Brian Summers
Harvey Keepler
Ken Thompson
Jamie Simpson
Michael Henry
Keith Golden
Joe Palladi (file copy)
Paul Liles
Babs Abubakari
Bryant Poole
BOARD MEMBER

D.O.T. 66

DEPARTMENT OF TRANSPORTATION
STATE OF GEORGIA

INTERDEPARTMENT CORRESPONDENCE

FILE P.I. Nos, 720815-/720817-, Clayton County
STP-037-2(54) / BHF-037-2(55)
SR 42 Widening

OFFICE Preconstruction

DATE March 20, 2006

FROM Margaret B. Pirkle, P.E., Assistant Director of Preconstruction

TO David E. Studstill, Jr., P.E., Chief Engineer

SUBJECT PROJECT CONCEPT REPORT

These combined projects are the widening and reconstruction of SR 42 from the existing four lane section just north of Lake Harbin Road to the existing four lane just south of Anvil Block Road. The total project length is 3.20 miles. The purpose of this project is to improve the safety and operation of SR 42 in Clayton County and also connect the existing four lane section to the south with the existing four lane section to the north. State Route 42 in Clayton County is a major north-south route that runs from I-285 south to I-675 and the Henry County line. In 2002, 2003, and 2004, the last three years accident data is available, there were 387 accidents reported along SR 42 within the project limits. The accident rate for all three years was significantly above the statewide average for this type of facility. The projected AADT for SR 42 is 17,340 VPD in 2013. It is anticipated that the AADT will increase to 25,092 VPD in design year 2033. This is an increase of 45% for this section of roadway.

The proposed construction will provide four, 12' lanes with a 20' raised median, 5' sidewalks and 16' urban shoulders for the entire project length. All intersections with substandard slew angles will be corrected. Project BHF-037-2(55) has been appropriated to replace the double 10" x 12" box culvert at Upton Creek with a bridge structure. All remaining existing culverts will be extended. A Norfolk Southern Railroad spur track bridge over SR 42 near Tony Road will be removed. The existing, not-in-use railroad spur track bridge is owned by the Army and operated by the Norfolk Southern Railroad Company.

Environmental concerns include requiring a COE 404 Permit; an Environmental Assessment will be prepared; a public hearing open house will be held; time saving procedures are not appropriate.

The estimated costs for these projects are:

STP-037-2(54), P.I. No. 720815-

	PROPOSED	APPROVED	FUNDING	PROG DATE
Construction (includes E&C and inflation)	$21,355,000	$6,390,000	L240	2013
Right-of-Way	$16,596,000	$16,596,000	L240	2007
Utilities*	$ 154,000			

P. I. Nos. 720815-/720817-
March 20, 2006

BHF-037-2(55), P.I. No. 720817

	PROPOSED	APPROVED	FUNDING	PROG DATE
Construction (includes E&C and inflation)	$637,000	$213,000	LICO	2013
Right-of-Way & Utilities*	-0-	-0-		

*Clayton County refused LGPA for utilities; rescission letter sent to Clayton County 3-8-05.

I recommend this project concept be approved.

MBP:JDQ/cj

Attachment

CONCUR _____
Buddy Gratton, P.E., Director of Preconstruction

APPROVE _____
David E. Studstill, Jr., P.E., Chief Engineer

DEPARTMENT OF TRANSPORTATION
STATE OF GEORGIA

Office of Road Design

PROJECT CONCEPT REPORT

Project Number: STP-037-2(54), BHF-037-2(55)
County: CLAYTON
P. I. Number: 720815, 720817

Federal Route Number: 23
State Route Number: 42

Recommendation for approval:

DATE 3/2/06 — James M. Davidson
Project Manager

DATE 3/2/06 — [illegible]
Office Head/District Engineer

The concept as presented herein and submitted for approval is consistent with that which is included in the Regional Transportation Improvement Program (RTP) and the State Transportation Improvement Program (STIP).

DATE _____ — State Transportation Planning Administrator

DATE _____ — State Transportation Financial Management Administrator

DATE _____ — State Environmental/Location Engineer

DATE 3-8-06 — [illegible]
State Traffic Safety & Design Engineer

DATE _____ — District Engineer

DATE _____ — Project Review Engineer

DATE _____ — State Bridge Design Engineer

DEPARTMENT OF TRANSPORTATION
STATE OF GEORGIA

Office of Road Design

PROJECT CONCEPT REPORT

Project Number: STP-037-2(54), BHF-037-2(55)
County: CLAYTON
P. I. Number: 720815, 720817

Federal Route Number: 23
State Route Number: 42

Recommendation for approval:

DATE 3/2/06 — James M. Davidson
Project Manager

DATE 3/2/06 — [illegible]
Office Head/District Engineer

The concept as presented herein and submitted for approval is consistent with that which is included in the Regional Transportation Improvement Program (RTP) and the State Transportation Improvement Program (STIP).

DATE _____ — State Transportation Planning Administrator

DATE _____ — State Transportation Financial Management Administrator

DATE _____ — State Environmental/Location Engineer

DATE _____ — State Traffic Safety & Design Engineer

DATE _____ — District Engineer

DATE _____ — Project Review Engineer

DATE 3/11/06 — Paul V. Liles Jr.
State Bridge Design Engineer

DEPARTMENT OF TRANSPORTATION
STATE OF GEORGIA

Office of Road Design

PROJECT CONCEPT REPORT

Project Number: STP-037-2(54), BHF-037-2(55)
County: CLAYTON
P. I. Number: 720815, 720817

Federal Route Number: 23
State Route Number: 42

Recommendation for approval:

DATE 3/2/06 — James M. Davidson
Project Manager

DATE 3/2/06 — [illegible]
Office Head/District Engineer

The concept as presented herein and submitted for approval is consistent with that which is included in the Regional Transportation Improvement Program (RTP) and the State Transportation Improvement Program (STIP).

DATE _____ — State Transportation Planning Administrator

DATE _____ — State Transportation Financial Management Administrator

DATE _____ — State Environmental/Location Engineer

DATE _____ — State Traffic Safety & Design Engineer

DATE _____ — District Engineer

DATE _____ — Project Review Engineer

DATE _____ — State Bridge Design Engineer

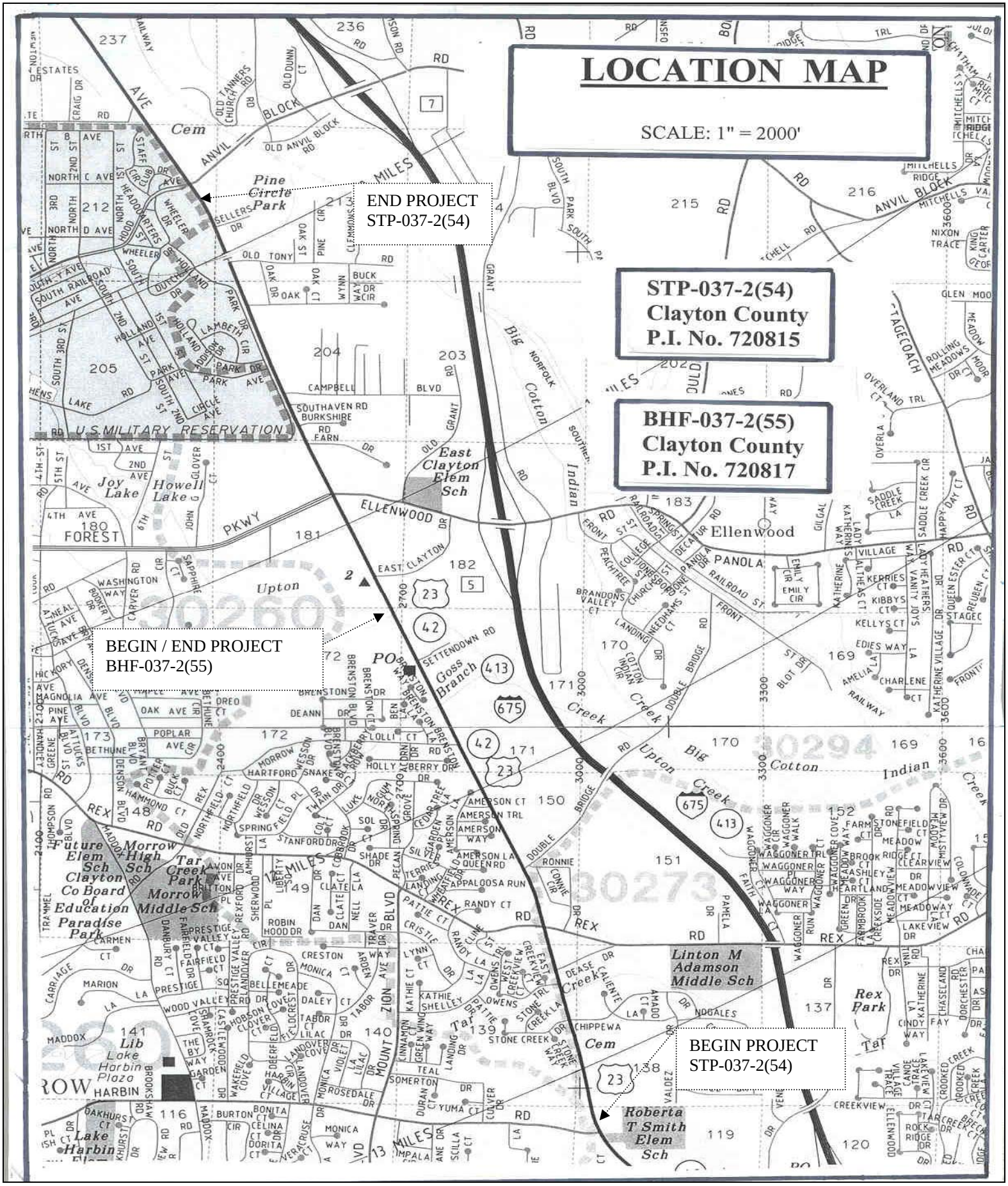
LOCATION MAP
SCALE: 1" = 2000'
END PROJECT
STP-037-2(54)
STP-037-2(54)
Clayton County
P.I. No. 720815
BHF-037-2(55)
Clayton County
P.I. No. 720817
BEGIN / END PROJECT
BHF-037-2(55)
BEGIN PROJECT
STP-037-2(54)
Pine Circle Park
U.S. MILITARY RESERVATION
East Clayton Elem Sch
Joy Lake
Howell Lake
Upton
Ellenwood
Goss Branch
Big Cotton Indian Creek
Future Elem Sch
Morrow High Sch
Tar Creek Park
Clayton Co Board of Education
Morrow Middle Sch
Paradise Park
Linton M Adamson Middle Sch
Rex Park
Lib Lake Harbin Plaza
Lake Harbin
Roberta T Smith Elem Sch

Need and Purpose For STP-037-2(54) Clayton County:

Background

The Atlanta Regional Commission (ARC) adopted the 2030 Regional Transportation Plan (RTP) for the 18-county Atlanta Metropolitan area and portions of 5 additional counties in December 2004. The Plan addresses travel needs through the year 2030. The RTP is the direct result of a comprehensive, cooperative, and continuous planning process conducted by ARC, local governments, Georgia Regional Transportation Authority (GRTA), air quality planning partners and the Georgia Department of Transportation in cooperation with the Federal Highway and Federal Transit Administrations. The approved 2030 RTP recommends the widening on SR 42 from Lake Harbin Rd to Anvil Block Rd and recommends the replacement of the double box culvert at Upton Creek with a bridge.

Existing Conditions

The existing SR 42 has two 12' travel lanes, one in each direction with variable width grassed shoulders. The posted speed limit is 45 mph and the maximum grade of the roadway is 6%.

Projects in the area in the 6 year Construction Work Program

- TIP/RTP # AR-433B, CM-675-1(1), PI # 714095, ATMS/I-675 Comm/Surveil from I-75 to I-285 in Clayton County, Preliminary Engineering (PE) is scheduled for 2006, and Construction is scheduled for 2007. This project will add fiber optic cable, surveillance cameras and changeable message signs from I-75 South to I-285 South.

- TIP/RTP # CL-239, STP-9103(5), PI # 751790, Panola Rd from Bouldercrest Rd to Stagecoach Rd in Clayton County, Preliminary Engineering (PE) is scheduled for 2006, ROW is Local, and Construction is scheduled for Long Range. This project consists of widening Panola Rd from a two-lane road to a four lane facility with two lanes in each direction.

Travel Demand and Operational Characteristics

The projected AADT for SR 42 is 17,340 vpd in 2013. It is anticipated that the AADT will increase to 25,092 vpd in design year of 2033. This is an increase of approximately 45% for this section of roadway. SR 42 is classified as an Urban Minor Arterial.

Community Issues

Clayton County is part of the Atlanta metropolitan area and is a rapidly growing residential area. The 2000 Census listed the population in Clayton County as 236,517. During the 1990 Census year, Clayton County had a population of 182,055. Between 1990 and 2000, Clayton County gained 54,462 residents, a 29.9 percent increase which continues a trend for net population increase for the Atlanta region. Hartsfield-Jackson International Airport is the economic engine that drives growth for the area. Clayton County has excellent access to I-75, I-85 and I-285 and with a third of all jobs related to the transportation industry. The 2010 population projection for Clayton County is 271,229. The 2000 census data shows the racial makeup of Clayton County is 51% Black, 38% White, 7% Hispanic, and 4% Asian. These factors would not impact the proposed project. The land uses in the vicinity of the project is a mix of high density commercial and low and medium residential property.

Safety

In 2002, 2003 and 2004, the last three years accident data is available, there were 387 accidents reported along SR 42 within the proposed project limits. The accident rate for all three years was significantly above the statewide average rate per million vehicle miles traveled (MVMT) for this type of facility. For 2002, the total number of accidents on SR 42 was 122, with 69 injuries and no fatalities. For 2003, the total number of accidents on SR 42 was 151, with 70 injuries and no fatalities. For 2004, the total number of accidents on SR 42 was 114, with 52 injuries and no fatalities.

SR 42	2002	2003	2004
Total Accidents	122	151	114
Accidents Per 100 MVMT	726	899	666
Statewide Accidents Per 100 MVMT	568	572	490
Accident Ratio % >< statewide average	27.8%>	57.2%>	35.9%>

The above accident data indicates SR 42, for the proposed project, experiences accidents at a rate that is significantly above statewide averages. The majority of these accidents were classified as “angle intersecting” and “rear end”.

Logical Termini

The proposed project concept for STP-037-2(54) consists of the widening of the roadway on SR 42 and BHF-037-2-(55) is the replacing of the double box culvert at Upton Creek with a bridge. The southern terminus of this project ties to the existing four lane section at Lake Harbin Rd. The northern terminus of this project ties to the existing four lane section just south of Anvil Block Rd. The total length of the projects is approximately 3.2 miles and lies within unincorporated Clayton County. This is a gap project between two completed roadway projects.

Need and Purpose

The purpose of this project is to improve the safety and operation of SR 42 in Clayton County and also to connect the existing four lane section to the south with the existing four-lane section to the north. SR 42 in Clayton County is a major north-south route that runs from I-285 south to I-675 and the Henry County line. This project will establish a new vertical alignment since the current sight distance appears to be an issue. This project will enhance connectivity for both pedestrian and vehicular traffic from surrounding neighborhoods and the commercial districts along SR 42. This project will provide safety, additional mobility, and operational benefits as well as provide the public with a safer driving environment.

Description of the proposed project:

This project consists of the widening and reconstruction of 3.2 miles of existing 2-lane rural section into a 4-lane urban section. The project begins at mile marker 1.9, just north of Lake Harbin Rd and ends at mile marker 5.1, just south of the Anvil block road intersection. The entire project lies within unincorporated Clayton County. Project BHF-037-2(55) has been appropriated in the eventuality that a bridge will be needed to replace the double 10 ft by 12ft box culvert at Upton Creek. If the hydraulic study determines that the culvert should remain then the culvert will be extended and project BHF-037-2(55) will be deleted.

Logical termini. The southern terminus is just north of Lake Harbin Road. The northern terminus is just south of Anvil Block Road.

Project STP-037-2(54) is a gap project between two completed roadway projects – it will link the existing 4-lane section to the south to the existing 4-lane section to the north. Improvements will not be made to the beginning and ending intersections, because these intersections have already been upgraded under previous projects. Vertical sight distance is an issue for the existing road, so a new vertical alignment will be established. Most of the existing pavement will not be retained.

The project begins north of Lake Harbin Road with symmetrical widening until just beyond the Rex Road intersection. SR 42 will be widened to the east side from this point until it reaches Upton Creek. At Upton Creek widening will continue on the west side of SR 42 until it reaches Southaven road. At this point, symmetrical widening will continue to the end of the project. The existing pavement may be retained from Southaven Road to the end of the project because the vertical alignment appears to be acceptable.

All intersections with substandard skew angles will be corrected. Specifically, the 5 intersections with substandard skews are: Rex Rd., Old Rex Morrow Rd., Forest Pkwy/ Ellenwood Rd., Farn Dr. and Old Tony Rd. In addition to realignment, the intersections at Rex Rd. and Forest Pkwy/ Ellenwood Rd. will require significant vertical alignment improvements in order to correct intersection sight distance issues and improve driver expectancy.

All existing culverts will be extended. A Norfolk Southern Railway spur track bridge near Old Tony Road will be removed due to deficiencies. Whether the bridge will be replaced is under evaluation and study.

Is the project located in a Non-attainment area? __x__Yes _____ No.

The proposed project lies within the Region's Air Quality Conformity Analysis and conforms to the Atlanta Regional Commission's Regional Transportation Plan (RTP) – project numbers CL-012A and CL-012B. The logical termini and number of lanes in this Concept Report conform to the ARC's model.

PDP Classification: Major __x__ Minor _____

Federal Oversight: Full Oversight ( ), Exempt (x), State Funded( ), or Other ( )

Functional Classification: Urban Minor Arterial

U. S. Route Number(s): **23** **State Route Number(s):** **42**

Traffic (AADT):
Current Year: (2005) **15000** Design Year: (2032) **24600**

Existing design features:

- Typical Section: *Two 12-ft lanes, variable width grassed shoulder.*
- Posted speed 45 mph Minimum radius for curve: 1637'
- Maximum super-elevation rate for curve: 6%
- Maximum grade: 6% SR 42
- Width of right of way: 80' typically
- Major structures: 1. Bridge culvert (Dbl. & Sing. 7x6) at Tar Creek
  2. Bridge Culvert (Dbl. 10x12) at Upton Creek
  3. Railroad Overpass at Fort Gillem (to be evaluated & studied)
- Major interchanges or intersections along the project: *Forest Parkway/Ellenwood Dr.*
- Existing length of roadway segment and the beginning mile logs for each county segment. *3.2 miles in length, Begin mile log 1.9, End mile log 5.1*

Proposed Design Features:

- Proposed typical section: *4-12' lanes with a 20' raised median and 16' urban shoulders.*
- Proposed Design Speed Mainline 45 mph
- Proposed Maximum grade Mainline 5 % Maximum grade allowable 7%.
- Proposed Maximum grade Side Street 6 % Maximum grade allowable 9%.
- Proposed Maximum grade driveway 15 %
- Proposed Minimum radius for curve 1637' Minimum radius allowable 700'
- Proposed Maximum super-elevation rate for curve: 6%
- Proposed Maximum degree of curve 3.5° Maximum degree allowable: 8.18°
- Right of way
  - Width variable: 100' to 150'
  - Easements: Temporary (x), Permanent (x), Utility (x), Other ( ).
  - Type of access control: Full ( ), Partial ( ), By Permit (x), Other ( )
  - Number of parcels: 150 +/- Number of displacements:
    - Business: 9
    - Residences: 9
    - Mobile homes: unknown
    - Other:
- Structures:

- Retaining walls: *Retaining walls are expected.*

- Major intersections and interchanges. *Forest Parkway/Ellenwood Drive, Rex Road*
- Traffic control during construction: *Detours are not expected. Traffic will be staged along the project.*
- Design Exceptions to controlling criteria anticipated:

	UNDETERMINED	YES	NO
HORIZONTAL ALIGNMENT:	( )	( )	(X)
ROADWAY WIDTH:	( )	( )	(X)
SHOULDER WIDTH:	( )	( )	(X)
VERTICAL GRADES:	( )	( )	(X)
CROSS SLOPES:	( )	( )	(X)
STOPPING SIGHT DISTANCE:	( )	( )	(X)
SUPERELEVATION RATES:	( )	( )	(X)
HORIZONTAL CLEARANCE:	(X)	( )	( )
SPEED DESIGN:	( )	( )	(X)
VERTICAL CLEARANCE:	( )	( )	(X)
BRIDGE WIDTH:	( )	( )	(X)
BRIDGE STRUCTURAL CAPACITY:	( )	( )	(X)

Clayton County has expressed a desire to retain the existing building at the NE corner of Rex Rd and SR 42 (Rainwater's Grocery). This property is not considered historic by the DOT, but Clayton County desires it be treated as historic. If this building were retained, it may be within the clear zone.

- Design Variances: *None Expected.*
- Environmental concerns: *A 404 permit may be needed in order to obtain required right-of-way in front of a historical house as well as Ft. Gillem. Underground storage tanks (UST's) may be within the proposed project limits; an evaluation is not complete at this time. The Norfolk Southern Railway spur track bridge over SR 42 was built circa 1941, so a 4f permit may be needed prior to its demolition. The Upton Creek crossing at SR 42 is located within the 100- year floodplain. Two other crossings are within the 500-year floodplain.*

- Level of environmental analysis:
  - Are Time Savings Procedures appropriate? Yes ( ), No (x),
  - Categorical exclusion ( ),
  - Environmental Assessment/Finding of No Significant Impact (FONSI) (x), or
  - Environmental Impact Statement (EIS) ( ).
- Utility involvements:
  - Atlanta Gas Light Company
  - BellSouth
  - Clayton County Transportation & Development
  - Clayton County Water Authority
  - Comcast Cable
  - Georgia Power Company
  - Norfolk Southern Railway

Project responsibilities:

- Design, GDOT
- Right of Way Acquisition, GDOT

- Relocation of Utilities, GDOT
- Letting to contract, GDOT
- Supervision of construction, GDOT
- Providing material pits, GDOT
- Providing detours. GDOT

Coordination

- Initial Concept Meeting was held 5-Jan 2005. Minutes are attached.
- Concept meeting was held 26-Sept 2005. Minutes are attached.
- The P.I.O.H. was held 12-Jan 2006 at The Rock Baptist Church in Rex, GA.
- P. A. R. meetings, dates and results. *N/A*
- FEMA, USCG, and/or TVA – *Coordination with FEMA will be necessary. The Upton Creek crossing is located within the 100 yr floodplain; Tar Creek and a tributary to Upton Creek are located within the 500 yr. Floodplain.*
- Local government comments. (*See Initial Concept meeting minutes) A driveway location study is requested for the elementary school across from Lake Harbin Road. The County would like to see the existing driveway improved to tie-in at Lake Harbin Road.*
- Other projects in the area: *CM-0004-00(500) – Sidewalk improvements along Lake Harbin Rd. Clayton County is beginning PE work on a driveway reconstruction at the Lake Harbin Rd. intersection. The County is also planning on widening Mt Zion Road from I-75 to Rex Rd.*
- Other coordination to date. *Permission from the U.S. Army Corps of Engineers Real Estate Division is needed to demolish the existing railroad spur track bridge. Permission was previously granted, but expired in 2003.*
- Railroads: *The existing, not-in-use railroad spur track bridge is owned by the Army and operated by Norfolk-Southern Railway Company. Norfolk-Southern has given us written permission to remove the track and bridge within the limits of the project.*

Scheduling – Responsible Parties' Estimate

- Time to complete the environmental process: ____18____months.
- Time to complete preliminary construction plans: ____9____months.
- Time to complete right of way plans: ____3____months.
- Time to complete the Section 404 Permit: ____6____months.
- Time to complete final construction plans: ____4____months.
- Time to complete to purchase right of way: ____12____months.
- List other major items that will affect the project schedule: n/a

Other alternates considered:

Alternate 1 – Symmetrical widening and retain the existing pavement. This alternative is not viable because of the existing vertical alignment as well as the poor intersection sight distance throughout the project.

Alternate 2 – Symmetrical widening with new vertical alignment. This alternative is not considered because this alternate requires more displacements, on both sides of the road, rather than fewer displacements on one side of the road.

considered because this alternate requires more displacements, on both sides of the road, rather than fewer displacements on one side of the road.

Alternate 3 –Originally, the project was proposed to widen to the west side at the beginning of the project, then widen to the East near the end of the project. This original alignment was shown at a public information meeting held on 07/24/1997. This original alignment is not feasible because new developments have been built along the west side of SR 42 since 1997 and significantly more displacements will occur if the original alignment is used.

Alternate 4 – No build. The existing roadway would continue to operate at a deficient level of service (LOS) while handling increasingly higher traffic volumes.

Comments:

The railroad bridge is an unused spur track that once entered on to Ft. Gillem. The vertical and horizontal clearances for this bridge are substandard. Additionally, the substandard clearances contribute to the poor intersection sight distance at the Old Tony Road intersection, just south of the bridge. The U.S. Army Corp of Engineers previously approved the removal and non-replacement of the bridge; however, this granted permission expired in April of 2003 (a letter was sent to the Department of the Army, Savannah District, Corps of Engineers, in December of 2005 to request an extension of the previously granted permission). The decision whether to replace or simply remove the bridge is currently under evaluation & study.

Attachments:

1. Cost Estimates:
    a. Construction including E&C,
    b. Right of Way, and
    c. Utilities.
2. Typical sections,
3. Accident summaries,
4. Capacity analysis,
5. Minutes from the Initial Concept meeting; Concept Team meetings, and P.I.O.H.
6. LGPA's or PMA's,
7. Conforming plan's network schematics showing thru lanes (Note: This attachment is required for non-attainment areas only), and
8. FEMA Floodplain maps.
9. Other items referred to in the body of the report.

PRELIMINARY COST ESTIMATE
OFFICE OF ROAD DESIGN

DATE: August 22, 2005

PREPARED BY: Peter B. Emmanuel
Scott MacLean

PROJECT NO: STP-037-2(54), Clayton County

P.I. NO: 720815

PROJECT NAME: Proposed Widening & Reconstruction of U.S. 23/S.R. 42

PROJECT LENGTH 3.2 MILES

PROJECT DESCRIPTION: 4-Lane Urban , 2-12' travel lanes in each direction with a 20' raised concrete median, type "C" median cross-over, right turn lanes, and 16' urban shoulder with sidewalk.

Existing Roadway
2-12' lanes, one each direction, with variable width grassed shoulder.

TRAFFIC:

Current Design Year: 2012 **Daily Volume (AADT):** 8,500

Future Design Year: 2032 **Daily Volume (AADT):** 12,500

Typical Section(s) Used in Estimate	Typical Section Length
Urban Widening: From 2 To 4-Lanes with 20 ft Raised Median Widen Symmetrical	3.2 MILES

PROJECT COSTS

RIGHT OF WAY:

1. PROPERTY - LAND (12.8 acres)	$939,502
2. PROPERTY - EASEMENT (9.3 acres)	$341,304
3. IMPROVEMENTS (signs, fencing, residences, businesses, etc.)	$2,974,000
4. RELOCATIONS (10 residential; 9 commercial)	$425,000
5. DAMAGES (proximity - 5 parcels; cost to cures - 9 parcels)	$100,000
6. SCHEDULING CONTINGENCY; ADM/COURT COSTS; INFLATION	$11,815,679
SUBTOTAL	$16,595,485

REIMBURSABLE UTILITIES: $154,000

Railroad/Transmission Lines/Services

SUBTOTAL $154,000

CONSTRUCTION

	QUANTITY	UNIT	UNIT COST	TOTAL
A. MAJOR STRUCTURES:				
1. Bridge Culvert (Double & Single 7' x 6') @ Tar Creek:				
Class A Concrete:	320	CY @	$514.00	$164,480
Bar Reinf Steel:	8,000	LB @	$0.81	$6,480
2. Bridge (100' x 88') over Upton Creek:	LS	LS	$500,000.00	$500,000
3. Plain Retaining Wall, Class A Concrete:	200	CY @	$513.00	$102,600
			SUBTOTAL	$773,560
B. GRADING AND EARTHWORK	500,000.0	CY	$5.00	$2,500,000
			SUBTOTAL	$2,500,000
C. DRAINAGE				
1. Longitudinal System (Including Catch Basin):	126	EA @	$2,000.00	$252,000
2. Storm Drain Pipe:	40,000	LF @	$33.40	$1,336,000
3. Flared End Section:	72	EA @	$1,000.00	$72,000
4. 48" Pipe Culvert:	124	EA @	$165.00	$20,460
			SUBTOTAL	$1,680,460
D. BASE AND PAVING				
1. Asphalt Paving (Thickness & Spread Rate):				
12.5 mm Superpave - 1 1/2" (165 LB/SY)	16,379	TN @	$45.00	$737,055
19 mm Superpave - 3" (330 LB/SY)	29,756	TN @	$52.00	$1,547,312
25 mm Superpave - 6" (660 LB/SY)	59,513	TN @	$51.00	$3,035,163
Bituminous Tack Coat	17,250	GL @	$1.75	$30,188
2. Graded Aggregate Base, 12":	119,025	TN @	$15.00	$1,785,375
3. Pvmt. Reinf. Fabric Strips, TP 2, Incl. Bitum Binder:	44,534	LF @	$6.00	$267,203
4. Asphaltic Concrete Leveling:	1,150	TN @	$55.00	$63,250
			SUBTOTAL	$7,465,546
E. CONCRETE WORK				
1. Curb and Gutter, 6" x 30", Type 2:	38,000	LF @	$16.00	$608,000
2. Curb and Gutter, 6" x 30", Type 7:	33,022	LF @	$12.00	$396,264
3. Sidewalk (4" Concrete):	20,000	SY @	$31.00	$620,000
4. Median Paving				
(4" thick with Type 7 curb face):	24,170	SY @	$25.00	$604,250
5. Concrete Valley Gutter, (6" thick):	1,740	SY @	$30.00	$52,200
(150 Parcels, 1/2 Residential, 1/2 Commercial):				
6. Driveway Concrete (6" thick):	2,850	SY @	$25.00	$71,250
			SUBTOTAL	$2,351,964

	QUANTITY	UNIT	UNIT COST	TOTAL
F. SIGNS AND STRIPING				
1. Striping (Pvm't marking, Traffic stripe, and etc.) :	LS	LS	$45,000.00	$45,000
2. Roadside Signs:	LS	LS	$56,000.00	$56,000
3. Raised P'vmt Markers:	LS	LS	$6,000.00	$6,000
4. ATMS:	LS	LS	$262,000.00	$262,000
			SUBTOTAL	$369,000
G. TRAFFIC SIGNALS				
1. Installations (including strain poles):	5	EA @	$80,000.00	$400,000
			SUBTOTAL	$400,000
H. GUARDRAIL				
1. Type "T":	1,244	LF @	$41.00	$51,004
2. Type "W":	470	LF @	$17.00	$7,990
3. Type 1 Anchorage:	20	EA @	$560.00	$11,200
4. Type 12 Anchorage:	20	EA @	$1,700.00	$34,000
			SUBTOTAL	$104,194
I. LIGHTING SYSTEM: STP-037-2(54)	LS	LS	$210,000.00	$210,000
J. TRAFFIC CONTROL: STP-037-2(54)	LS	LS	$350,000.00	$350,000
K. CLEARING AND GRUBBING:	40.0	AC @	$5,000.00	$200,000
L. LANDSCAPING:	5.0	AC @	$1,104.08	$5,521
M. EROSION CONTROL:				
1. Permanent Grassing:	6	AC @	$878.00	$4,847
2. Temporary Grassing:	3	AC @	$515.00	$1,422
3. Mulch:	490	TN @	$245.00	$120,109
4. Liquid Lime:	14	GL @	$20.00	$276
5. Fertilizer Nitrogen Content:	276	LB @	$1.75	$483
6. Agricultural Lime:	11	TN @	$62.00	$685
7. Fertilizer Mixed Grade:	6	TN @	$276.00	$1,524
8. Blocked Sod Between Curb & Gutter & Sidewalk:	33,171	SY @	$9.00	$298,539
9. Temporary Silt Fence Type "A":	46,200	LF @	$2.00	$92,400
10. Maintenance of Temporary Silt Fence Type "A":	46,200	LF @	$1.43	$66,066
11. Construct & Remove Inlet Sediment Trap:	142	EA @	$185.75	$26,358
12. Maintenance of Inlet Sediment Trap:	142	EA @	$93.38	$13,251
13. Water Quality Monitoring & Sampling:	2	EA @	$1,600.00	$3,200
14. Water Quality Inspections:	18	MO @	$850.00	$15,300
15. Stone Dumped RipRap Type 1:	1,349	SY @	$47.70	$64,329
16. Construct & Remove Sediment Basin, Type 1:	2	EA @	$6,000.00	$12,000
17. Maintenance of Temporary Sediment Basin, Type 1:	2	EA @	$900.00	$1,800
18. Construct & Remove Temporary Ditch Checks:	22	EA @	$190.00	$4,180
19. Construct & Remove Silt Control Gate Type "2":	6	EA @	$500.00	$2,750
20. Maintenance of Silt Control Gate Type "2":	6	EA @	$140.00	$770
21. Construction Exit:	4	EA @	$1,300.00	$5,200
			SUBTOTAL	$735,489
N. MISCELLANEOUS ITEMS:				
1. Field Engineer's Office (Type 3):	1	EA @	$60,000.00	$60,000
2. Right-of-Way Markers:	300	EA @	$74.00	$22,200
			SUBTOTAL	$82,200
O. SPECIAL FEATURES:				
1. Remove RR Tracks near Old Tony Rd.	200	LF @	$210.00	$42,000
			SUBTOTAL	$42,000

ESTIMATE SUMMARY

Right of Way:	**$16,595,485**
Reimbursable Utilities:	**$154,000**

CONSTRUCTION COST SUMMARY

A. Major Structures:	$773,560
B. Grading And Earthwork:	$2,500,000
C. Drainage:	$1,680,460
D. Base And Paving:	$7,465,546
E. Concrete Work:	$2,351,964
F. Signs and Stripping:	$369,000
G. Traffic Signal:	$400,000
H. Guardrail:	$104,194
I. Lighting System:	$210,000
J. Traffic Control:	$350,000
K. Clearing And Grubbing:	$200,000
L. Landscaping:	$5,521
M. Erosion Control:	$735,489
N. Miscellaneous Items:	$82,200
O. Special Features:	$42,000
SUBTOTAL ROADWAY ITEMS:	**$17,269,934**
TOTAL CONSTRUCTION ESTIMATE:	**$17,269,934**
3 YEARS OF INFLATION @ 5% PER YEAR:	**$2,722,174**
10% E & C:	**$1,999,211**
TOTAL:	**$21,991,319**
PROJECT TOTAL INCLUDING R/W and UTILITIES:	**$38,740,804**

STATE	PROJECT NUMBER	SHEET NO.	TOTAL SHEETS
GA.	STP-037-2(54)		

CONCEPT REPORT:
TYPICAL SECTION
SR 42

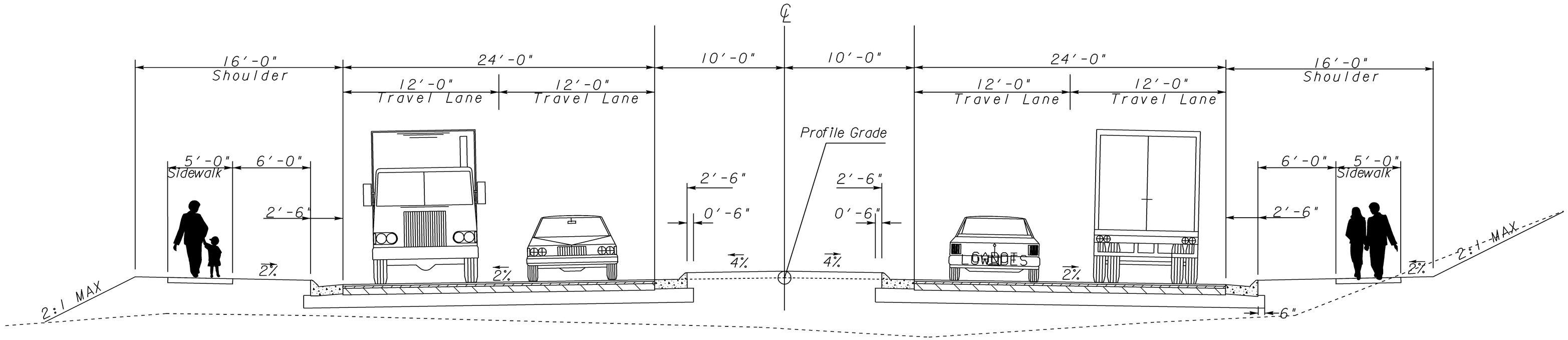

TANGENT SECTION WITH NORMAL CROWN

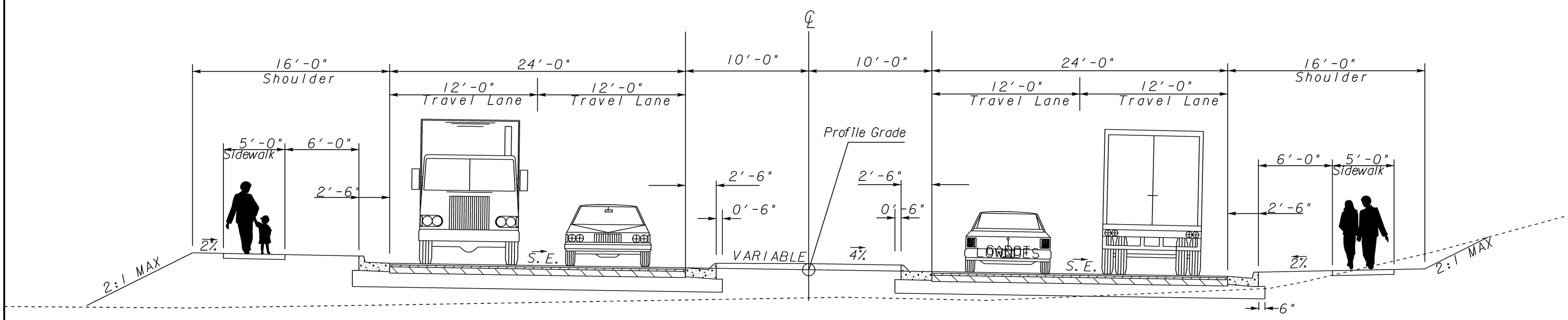

SUPER ELEVATED SECTION

STP-037-2(54)
CLAYTON CO.

SR 42 FROM LAKE HARBIN RD. TO ANVIL BLOCK RD.

QUERY SUMMARY
CLAYTON COUNTY, SR 42
From Lake Harbin Rd to Anvil Block Rd
For Year(s): 2002, 2003, 2004

Year	County	Route Type	Route Number	Beginning Milelog	Ending Milelog	No. Accidents	No. Vehicles	No. Injuries	No. Fatalities
2002	Clayton	State Route	004200	1.83	5.33	122	247	69	0
					2002 SubTotal	122	247	69	0
2003	Clayton	State Route	004200	1.83	5.33	151	300	70	0
					2003 SubTotal	151	300	70	0
2004	Clayton	State Route	004200	1.83	5.33	114	231	52	0
					2004 SubTotal	114	231	52	0
					All Year(s)Total	**387**	**778**	**191**	**0**

ACCIDENT RATE CALCULATION for year(s) 2002,2003,2004

Year	County	Rt Type	Route Num	Low Milelog	High Milelog	ADT	Distance	Vehicle Miles
2002	Clayton	1	004200	1.83	2.54	11,200	0.71	7,952
2002	Clayton	1	004200	2.54	4.15	12,300	1.61	19,803
2002	Clayton	1	004200	4.15	5.3	15,500	1.15	17,825
2002	Clayton	1	004200	5.3	5.33	15,100	0.03	453

Total Vehicle Miles: 46,033	Total Accidents: 122	Accident Rate: 726
Average ADT: 13,152	Total Injuries: 69	Injury Rate: 411
Length in Miles: 3.50	Total Fatalities: 0	Fatality Rate: 0.00

NOTE: Rates are per 100 Million Vehicle Miles

Year	County	Rt Type	Route Num	Low Milelog	High Milelog	ADT	Distance	Vehicle Miles
2003	Clayton	1	004200	1.83	2.54	11,200	0.71	7,952
2003	Clayton	1	004200	2.54	4.15	12,300	1.61	19,803
2003	Clayton	1	004200	4.15	5.3	15,500	1.15	17,825
2003	Clayton	1	004200	5.3	5.33	15,100	0.03	453

Total Vehicle Miles: 46,033	Total Accidents: 151	Accident Rate: 899
Average ADT: 13,152	Total Injuries: 70	Injury Rate: 417
Length in Miles: 3.50	Total Fatalities: 0	Fatality Rate: 0.00

NOTE: Rates are per 100 Million Vehicle Miles

Year	County	Rt Type	Route Num	Low Milelog	High Milelog	ADT	Distance	Vehicle Miles
2004	Clayton	1	004200	1.83	2.54	12,510	0.71	8,882
2004	Clayton	1	004200	2.54	4.15	12,830	1.61	20,656
2004	Clayton	1	004200	4.15	5.3	14,690	1.15	16,893
2004	Clayton	1	004200	5.3	5.33	16,200	0.03	486

Total Vehicle Miles: 46,918	Total Accidents: 114	Accident Rate: 666
Average ADT: 13,405	Total Injuries: 52	Injury Rate: 304
Length in Miles: 3.50	Total Fatalities: 0	Fatality Rate: 0.00

NOTE: Rates are per 100 Million Vehicle Miles

HCS CAPACITY ANALYSIS

FOR EXISTING CONDITIONS

SUMMARY OF INTERSECTIONS ANALYZED

INTERSECTION	LEVEL OF SERVICE
Lake Harbin Road and SR 42	**C** D in NB left
Rex Road and SR 42	**C** D in EB left and NB left
Forest Parkway – Ellenwood Road and SR42	**C**
Campbell Road and SR 42	**B** D in EB and WB
Anvil Block – Hood Avenue and SR 42	**D**

HCS2000: Signalized Intersections Release 4.1c

Analyst: Scott M.
Agency:
Date: 6/20/05
Period:
Project ID:
E/W St:

Inter.: Lake Harbin Road @ SR 42
Area Type: All other areas
Jurisd:
Year : 2005

N/S St:

SIGNALIZED INTERSECTION SUMMARY

	Eastbound			Westbound			Northbound			Southbound		
	L	T	R	L	T	R	L	T	R	L	T	R
No. Lanes	1	0	1	0	0	0	1	2	0	1	2	1
LGConfig	L		R				L	T		L	T	R
Volume	57		396				320	405		20	433	75
Lane Width	12.0		12.0				12.0	12.0		12.0	12.0	12.0
RTOR Vol			50									50

Duration 0.25 Area Type: All other areas

Signal Operations

Phase Combination	1	2	3	4			5	6	7	8
EB Left	A				NB	Left	A			
Thru						Thru		P		
Right	A					Right				
Peds						Peds				
WB Left					SB	Left	A			
Thru						Thru		P		
Right						Right		P		
Peds						Peds				
NB Right					EB	Right				
SB Right					WB	Right				
Green	35.6						25.5	26.9		
Yellow	3.0						3.0	3.0		
All Red	1.0						1.0	1.0		

Cycle Length: 100.0 sec

Intersection Performance Summary

Appr/ Lane Grp	Lane Group Capacity	Adj Sat Flow Rate (s)	Ratios v/c	g/C	Lane Group Delay	LOS	Approach Delay	LOS
Eastbound								
L	643	1805	0.10	0.36	21.6	C		
							29.0	C
R	575	1615	0.67	0.36	30.2	C		
Westbound								
Northbound								
L	460	1805	0.77	0.25	42.6	D		
T	971	3610	0.46	0.27	32.1	C	36.7	D
Southbound								
L	460	1805	0.05	0.25	28.1	C		
T	971	3610	0.50	0.27	32.6	C	32.2	C
R	434	1615	0.06	0.27	27.5	C		

Intersection Delay = 33.4 (sec/veh) Intersection LOS = C

HCS2000: Signalized Intersections Release 4.1c

Gdot
Gdot
#2 Capitol Square

Atlanta, Georgia 30334
Phone: Fax:
E-Mail:

OPERATIONAL ANALYSIS

Analyst: Scott M.
Agency/Co.:
Date Performed: 6/20/05
Analysis Time Period:
Intersection: Lake Harbin Road @ SR 42
Area Type: All other areas
Jurisdiction:
Analysis Year: 2005
Project ID:

East/West Street North/South Street

VOLUME DATA

	Eastbound			Westbound			Northbound			Southbound		
	L	T	R	L	T	R	L	T	R	L	T	R
Volume	57		396				320	405		20	433	75
% Heavy Veh	0		0				0	0		0	0	0
PHF	0.90		0.90				0.90	0.90		0.90	0.90	0.90
PK 15 Vol	16		110				89	113		6	120	21
Hi Ln Vol												
% Grade		0						0			0	
Ideal Sat	1900		1900				1900	1900		1900	1900	1900
ParkExist												
NumPark												
No. Lanes	1	0	1	0	0	0	1	2	0	1	2	1
LGConfig	L		R				L	T		L	T	R
Lane Width	12.0		12.0				12.0	12.0		12.0	12.0	12.0
RTOR Vol			50									50
Adj Flow	63		384				356	450		22	481	28
%InSharedLn												
Prop LTs								0.000			0.000	
Prop RTs			1.000				0.000			0.000		1.000
Peds Bikes	0			0			0			0		
Buses	0		0				0	0		0	0	0
%InProtPhase												
Duration	0.25											

Area Type: All other areas

OPERATING PARAMETERS

	Eastbound			Westbound			Northbound			Southbound		
	L	T	R	L	T	R	L	T	R	L	T	R
Init Unmet	0.0		0.0				0.0	0.0		0.0	0.0	0.0

Arriv. Type	3	3				3	3		3	3	3	
Unit Ext.	3.0	3.0				3.0	3.0		3.0	3.0	3.0	
I Factor	1.000					1.000			1.000			
Lost Time	2.0	2.0				2.0	2.0		2.0	2.0	2.0	
Ext of g	2.0	2.0				2.0	2.0		2.0	2.0	2.0	
Ped Min g	3.2			3.2		3.2			3.2			

PHASE DATA

Phase Combination	1	2	3	4	5	6	7	8
EB Left	A				NB Left	A		
Thru					Thru		P	
Right	A				Right			
Peds					Peds			
WB Left					SB Left	A		
Thru					Thru		P	
Right					Right		P	
Peds					Peds			
NB Right					EB Right			
SB Right					WB Right			
Green	35.6				25.5	26.9		
Yellow	3.0				3.0	3.0		
All Red	1.0				1.0	1.0		

Cycle Length: 100.0 se

VOLUME ADJUSTMENT AND SATURATION FLOW WORKSHEET

Volume Adjustment

	Eastbound			Westbound			Northbound			Southbound		
	L	T	R	L	T	R	L	T	R	L	T	R
Volume, V	57		396				320	405		20	433	75
PHF	0.90		0.90				0.90	0.90		0.90	0.90	0.90
Adj flow	63		384				356	450		22	481	28
No. Lanes	1	0	1	0	0	0	1	2	0	1	2	1
Lane group	L		R				L	T		L	T	R
Adj flow	63		384				356	450		22	481	28
Prop LTs								0.000			0.000	
Prop RTs			1.000				0.000			0.000		1.000

Saturation Flow Rate (see Exhibit 16-7 to determine the adjustment factors)

	Eastbound			Westbound			Northbound			Southbound		
LG	L		R				L	T		L	T	R
So	1900		1900				1900	1900		1900	1900	1900
Lanes	1	0	1	0	0	0	1	2	0	1	2	1
fW	1.000		1.000				1.000	1.000		1.000	1.000	1.00
fHV	1.000		1.000				1.000	1.000		1.000	1.000	1.00
fG	1.000		1.000				1.000	1.000		1.000	1.000	1.00
fP	1.000		1.000				1.000	1.000		1.000	1.000	1.00
fBB	1.000		1.000				1.000	1.000		1.000	1.000	1.00
fA	1.00		1.00				1.00	1.00		1.00	1.00	1.00
fLU	1.00		1.00				1.00	0.95		1.00	0.95	1.00

fRT		0.850			1.000		1.000	0.85	
fLT	0.950			0.950	1.000	0.950	1.000		
Sec.									
fLpb	1.000			1.000	1.000	1.000	1.000		
fRpb		1.000			1.000		1.000	1.00	
S	1805	1615		1805	3610	1805	3610	1615	
Sec.									

CAPACITY AND LOS WORKSHEET

Capacity Analysis and Lane Group Capacity

Appr/ Mvmt	Lane Group	Adj Flow Rate (v)	Adj Sat Flow Rate (s)	Flow Ratio (v/s)	Green Ratio (g/C)	--Lane Group-- Capacity (c)	v/c Ratio
Eastbound							
Prot							
Perm							
Left	L	63	1805	0.03	0.36	643	0.10
Prot							
Perm							
Thru							
Right	R	384	1615	# 0.24	0.36	575	0.67
Westbound							
Prot							
Perm							
Left							
Prot							
Perm							
Thru							
Right							
Northbound							
Prot							
Perm							
Left	L	356	1805	# 0.20	0.25	460	0.77
Prot							
Perm							
Thru	T	450	3610	0.12	0.27	971	0.46
Right							
Southbound							
Prot							
Perm							
Left	L	22	1805	0.01	0.25	460	0.05
Prot							
Perm							
Thru	T	481	3610	# 0.13	0.27	971	0.50
Right	R	28	1615	0.02	0.27	434	0.06

Sum of flow ratios for critical lane groups, Yc = Sum (v/s) = 0.57
Total lost time per cycle, L = 12.00 sec
Critical flow rate to capacity ratio, Xc = (Yc)(C)/(C-L) = 0.65

Control Delay and LOS Determination

Appr/ Lane Grp	Ratios v/c	g/C	Unf Del d1	Prog Adj Fact	Lane Grp Cap	Incremental Factor k	Del d2	Res Del d3	Lane Group Delay	LOS	Approach Delay	LOS
Eastbound												
L	0.10	0.36	21.5	1.000	643	0.11	0.1	0.0	21.6	C		
											29.0	C

R	0.67	0.36	27.2	1.000	575	0.24	3.0	0.0	30.2	C		
Westbound												
Northbound												
L	0.77	0.25	34.6	1.000	460	0.32	8.0	0.0	42.6	D		
T	0.46	0.27	30.5	1.000	971	0.50	1.6	0.0	32.1	C	36.7	D
Southbound												
L	0.05	0.25	28.1	1.000	460	0.11	0.0	0.0	28.1	C		
T	0.50	0.27	30.8	1.000	971	0.50	1.8	0.0	32.6	C	32.2	C
R	0.06	0.27	27.2	1.000	434	0.50	0.3	0.0	27.5	C		

Intersection delay = 33.4 (sec/veh) Intersection LOS = C

SUPPLEMENTAL PERMITTED LT WORKSHEET
for exclusive lefts

Input

	EB	WB	NB	SB
Cycle length, C 100.0 sec				
Total actual green time for LT lane group, G (s)				
Effective permitted green time for LT lane group, g(s)				
Opposing effective green time, go (s)				
Number of lanes in LT lane group, N				
Number of lanes in opposing approach, No				
Adjusted LT flow rate, VLT (veh/h)				
Proportion of LT in LT lane group, PLT				
Proportion of LT in opposing flow, PLTo				
Adjusted opposing flow rate, Vo (veh/h)				
Lost time for LT lane group, tL				
Computation				
LT volume per cycle, LTC=VLTC/3600				
Opposing lane util. factor, fLUo			0.95	0.9
Opposing flow, Volc=VoC/[3600(No)fLUo] (veh/ln/cyc)				
gf=G[exp(- a * (LTC ** b))]-tl, gf<=g				
Opposing platoon ratio, Rpo (refer Exhibit 16-11)				
Opposing Queue Ratio, qro=Max[1-Rpo(go/C),0]				
gq, (see Exhibit C16-4,5,6,7,8)				
gu=g-gq if gq>=gf, or = g-gf if gq<gf				
n=Max(gq-gf)/2,0)				
PTHo=1-PLTo				
PL*=PLT[1+(N-1)g/(gf+gu/EL1+4.24)]				
EL1 (refer to Exhibit C16-3)				
EL2=Max((1-Ptho**n)/Plto, 1.0)				
fmin=2(1+PL)/g or fmin=2(1+Pl)/g				
gdiff=max(gq-gf,0)				
fm=[gf/g]+[gu/g]/[1+PL(EL1-1)], (min=fmin;max=1.00)				
flt=fm=[gf/g]+[gu/g]/[1+PL(EL1-1)]+[gdiff/g]/[1+PL(EL2-1)],(fmin<=fm<=1.00)				
or flt=[fm+0.91(N-1)]/N**				
Left-turn adjustment, fLT				

For special case of single-lane approach opposed by multilane approach, see text.

* If Pl>=1 for shared left-turn lanes with N>1, then assume de-facto left-turn lane and redo calculations.

** For permitted left-turns with multiple exclusive left-turn lanes, flt=fm.
For special case of multilane approach opposed by single-lane approach
or when gf>gq, see text.

SUPPLEMENTAL PERMITTED LT WORKSHEET
for shared lefts

Input

	EB	WB	NB	SB
Cycle length, C 100.0 sec				
Total actual green time for LT lane group, G (s)				
Effective permitted green time for LT lane group, g(s)				
Opposing effective green time, go (s)				
Number of lanes in LT lane group, N				
Number of lanes in opposing approach, No				
Adjusted LT flow rate, VLT (veh/h)				
Proportion of LT in LT lane group, PLT			0.000	0.0
Proportion of LT in opposing flow, PLTo				
Adjusted opposing flow rate, Vo (veh/h)				
Lost time for LT lane group, tL				
Computation				
LT volume per cycle, LTC=VLTC/3600				
Opposing lane util. factor, fLUo			0.95	0.9
Opposing flow, Volc=VoC/[3600(No)fLUo] (veh/ln/cyc)				
gf=G[exp(- a * (LTC ** b))]-tl, gf<=g				
Opposing platoon ratio, Rpo (refer Exhibit 16-11)				
Opposing Queue Ratio, qro=Max[1-Rpo(go/C),0]				
gq, (see Exhibit C16-4,5,6,7,8)				
gu=g-gq if gq>=gf, or = g-gf if gq<gf				
n=Max(gq-gf)/2,0)				
PTHo=1-PLTo				
PL*=PLT[1+(N-1)g/(gf+gu/EL1+4.24)]				
EL1 (refer to Exhibit C16-3)				
EL2=Max((1-Ptho**n)/Plto, 1.0)				
fmin=2(1+PL)/g or fmin=2(1+Pl)/g				
gdiff=max(gq-gf,0)				
fm=[gf/g]+[gu/g]/[1+PL(EL1-1)], (min=fmin;max=1.00)				
flt=fm=[gf/g]+[gu/g]/[1+PL(EL1-1)]+[gdiff/g]/[1+PL(EL2-1)],(fmin<=fm<=1.00)				
or flt=[fm+0.91(N-1)]/N**				
Left-turn adjustment, fLT				

For special case of single-lane approach opposed by multilane approach,
see text.
* If Pl>=1 for shared left-turn lanes with N>1, then assume de-facto
  left-turn lane and redo calculations.
** For permitted left-turns with multiple exclusive left-turn lanes, flt=fm.
For special case of multilane approach opposed by single-lane approach
or when gf>gq, see text.

SUPPLEMENTAL PEDESTRIAN-BICYCLE EFFECTS WORKSHEET

Permitted Left Turns

	EB	WB	NB	SB
Effective pedestrian green time, gp (s)				
Conflicting pedestrian volume, Vped (p/h)				
Pedestrian flow rate, Vpedg (p/h)				
OCCpedg				
Opposing queue clearing green, gq (s)				
Eff. ped. green consumed by opp. veh. queue, gq/gp				
OCCpedu				

Opposing flow rate, Vo (veh/h)
OCCr
Number of cross-street receiving lanes, Nrec
Number of turning lanes, Nturn
ApbT
Proportion of left turns, PLT
Proportion of left turns using protected phase, PLTA
Left-turn adjustment, fLpb
Permitted Right Turns
Effective pedestrian green time, gp (s)
Conflicting pedestrian volume, Vped (p/h)
Conflicting bicycle volume, Vbic (bicycles/h)
Vpedg
OCCpedg
Effective green, g (s)
Vbicg
OCCbicg
OCCr
Number of cross-street receiving lanes, Nrec
Number of turning lanes, Nturn
ApbT
Proportion right-turns, PRT
Proportion right-turns using protected phase, PRTA
Right turn adjustment, fRpb

SUPPLEMENTAL UNIFORM DELAY WORKSHEET

	EBLT	WBLT	NBLT	SBLT
Cycle length, C	100.0 sec			
Adj. LT vol from Vol Adjustment Worksheet, v				
v/c ratio from Capacity Worksheet, X				
Protected phase effective green interval, g (s)				
Opposing queue effective green interval, gq				
Unopposed green interval, gu				
Red time r=(C-g-gq-gu)				
Arrival rate, qa=v/(3600(max[X,1.0]))				
Protected ph. departure rate, Sp=s/3600				
Permitted ph. departure rate, Ss=s(gq+gu)/(gu*3600)				
XPerm				
XProt				
Case				
Queue at beginning of green arrow, Qa				
Queue at beginning of unsaturated green, Qu				
Residual queue, Qr				
Uniform Delay, d1				

DELAY/LOS WORKSHEET WITH INITIAL QUEUE

Appr/ Lane Group	Initial Unmet Demand Q veh	Dur. Unmet Demand t hrs.	Uniform Delay Unadj. ds	Uniform Delay Adj. d1 sec	Initial Queue Param. u	Final Unmet Demand Q veh	Initial Queue Delay d3 sec	Lane Group Delay d sec
Eastbound								

Westbound

Northbound

Southbound

Intersection Delay 33.4 sec/veh Intersection LOS C

BACK OF QUEUE WORKSHEET

	Eastbound			Westbound			Northbound			Southbound		
LaneGroup	L		R				L	T		L	T	R
Init Queue	0.0		0.0				0.0	0.0		0.0	0.0	0.0
Flow Rate	63		384				356	236		22	253	28
So	1900		1900				1900	1900		1900	1900	1900
No.Lanes	1	0	1	0	0	0	1	2	0	1	2	1
SL	1805		1615				1805	1900		1805	1900	1615
LnCapacity	643		575				460	511		460	511	434
Flow Ratio	0.03		0.24				0.20	0.12		0.01	0.13	0.02
v/c Ratio	0.10		0.67				0.77	0.46		0.05	0.50	0.06
Grn Ratio	0.36		0.36				0.25	0.27		0.25	0.27	0.27
I Factor		1.000						1.000			1.000	
AT or PVG	3		3				3	3		3	3	3
Pltn Ratio	1.00		1.00				1.00	1.00		1.00	1.00	1.00
PF2	1.00		1.00				1.00	1.00		1.00	1.00	1.00
Q1	1.2		9.0				9.2	5.5		0.5	5.9	0.6
kB	0.6		0.5				0.5	0.8		0.5	0.8	0.7
Q2	0.1		1.0				1.4	0.6		0.0	0.7	0.0
Q Average	1.2		10.0				10.6	6.1		0.5	6.7	0.6
Q Spacing	25.0		25.0				25.0	25.0		25.0	25.0	25.0
Q Storage	0		0				0	0		0	0	0
Q S Ratio												
70th Percentile Output:												
fB%	1.2		1.2				1.2	1.2		1.2	1.2	1.3
BOQ	1.5		11.8				12.5	7.5		0.6	8.2	0.8
QSRatio												
85th Percentile Output:												
fB%	1.6		1.5				1.5	1.5		1.6	1.5	1.7
BOQ	2.0		15.2				16.0	9.1		0.8	9.9	1.0
QSRatio												
90th Percentile Output:												
fB%	1.8		1.6				1.6	1.6		1.8	1.6	1.9
BOQ	2.2		16.5				17.3	10.1		0.9	10.9	1.2
QSRatio												
95th Percentile Output:												
fB%	2.1		1.8				1.8	1.9		2.1	1.9	2.5
BOQ	2.5		18.5				19.4	11.6		1.0	12.4	1.6
QSRatio												
98th Percentile Output:												

fB%	2.6	2.2		2.1	2.1	2.7	2.1	3.0
BOQ	3.2	21.7		22.7	13.1	1.3	14.0	1.9
QSRatio								

ERROR MESSAGES

No errors to report.

HCS2000: Signalized Intersections Release 4.1c

Analyst: qScott M.
Agency:
Date: 6/21/05
Period:
Project ID:
E/W St:

Inter.: Rex Rd @ SR 42
Area Type: All other areas
Jurisd:
Year :

N/S St:

SIGNALIZED INTERSECTION SUMMARY

	Eastbound			Westbound			Northbound			Southbound		
	L	T	R	L	T	R	L	T	R	L	T	R
No. Lanes	1	1	1	1	1	0	1	1	0	1	1	1
LGConfig	L	T	R	L	TR		L	TR		L	T	R
Volume	113	279	179	28	160	85	179	207	0	79	305	122
Lane Width	12.0	12.0	12.0	12.0	12.0		12.0	12.0		12.0	12.0	12.0
RTOR Vol			25			25			25			50

Duration 0.25 Area Type: All other areas

Signal Operations

Phase Combination	1	2	3	4	5	6	7	8
EB Left	P				NB Left	P		
Thru		P			Thru	P		
Right		P			Right	P		
Peds					Peds			
WB Left	P				SB Left	P		
Thru		P			Thru	P		
Right		P			Right	P		
Peds					Peds			
NB Right					EB Right			
SB Right					WB Right			
Green	9.0	20.2			13.6	23.2		
Yellow	3.0	3.0			3.0	3.0		
All Red	1.0	1.0			1.0	1.0		

Cycle Length: 82.0 sec

Intersection Performance Summary

Appr/ Lane Grp	Lane Group Capacity	Adj Sat Flow Rate (s)	Ratios v/c	Ratios g/C	Lane Group Delay	Lane Group LOS	Approach Delay	Approach LOS
Eastbound								
L	198	1805	0.64	0.11	49.5	D		
T	468	1900	0.66	0.25	35.0+	D	36.5	D
R	398	1615	0.43	0.25	29.4	C		
Westbound								
L	198	1805	0.16	0.11	34.7	C		
TR	449	1822	0.55	0.25	31.6	C	32.0	C
Northbound								
L	299	1805	0.67	0.17	43.2	D		
TR	538	1900	0.43	0.28	26.5	C	34.2	C
Southbound								
L	299	1805	0.29	0.17	32.5	C		
T	538	1900	0.63	0.28	31.2	C	30.1	C
R	457	1615	0.18	0.28	23.0	C		

Intersection Delay = 33.5 (sec/veh) Intersection LOS = C

HCS2000: Signalized Intersections Release 4.1c

Gdot
Gdot
#2 Capitol Square

Atlanta, Georgia 30334
Phone: Fax:
E-Mail:

OPERATIONAL ANALYSIS

Analyst: qScott M.
Agency/Co.:
Date Performed: 6/21/05
Analysis Time Period:
Intersection: Rex Rd @ SR 42
Area Type: All other areas
Jurisdiction:
Analysis Year:
Project ID:

East/West Street North/South Street

VOLUME DATA

	Eastbound			Westbound			Northbound			Southbound		
	L	T	R	L	T	R	L	T	R	L	T	R
Volume	113	279	179	28	160	85	179	207	0	79	305	122
% Heavy Veh	0	0	0	0	0	0	0	0	0	0	0	0
PHF	0.90	0.90	0.90	0.90	0.90	0.90	0.90	0.90	0.90	0.90	0.90	0.90
PK 15 Vol	31	78	50	8	44	24	50	58	0	22	85	34
Hi Ln Vol												
% Grade		0			0			0			0	
Ideal Sat	1900	1900	1900	1900	1900		1900	1900		1900	1900	1900
ParkExist												
NumPark												
No. Lanes	1	1	1	1	1	0	1	1	0	1	1	1
LGConfig	L	T	R	L	TR		L	TR		L	T	R
Lane Width	12.0	12.0	12.0	12.0	12.0		12.0	12.0		12.0	12.0	12.0
RTOR Vol			25			25			25			50
Adj Flow	126	310	171	31	245		199	230		88	339	80
%InSharedLn												
Prop LTs		0.000			0.000			0.000			0.000	
Prop RTs		0.000	1.000		0.273			0.000			0.000	1.000
Peds Bikes	0			0			0			0		
Buses	0	0	0	0	0		0	0		0	0	0
%InProtPhase												

Duration 0.25 Area Type: All other areas

OPERATING PARAMETERS

	Eastbound			Westbound			Northbound			Southbound		
	L	T	R	L	T	R	L	T	R	L	T	R
Init Unmet	0.0	0.0	0.0	0.0	0.0		0.0	0.0		0.0	0.0	0.0

Arriv. Type	3	3	3	3	3		3	3		3	3	3
Unit Ext.	3.0	3.0	3.0	3.0	3.0		3.0	3.0		3.0	3.0	3.0
I Factor		1.000			1.000			1.000			1.000	
Lost Time	2.0	2.0	2.0	2.0	2.0		2.0	2.0		2.0	2.0	2.0
Ext of g	2.0	2.0	2.0	2.0	2.0		2.0	2.0		2.0	2.0	2.0
Ped Min g		3.2			3.2			3.2			3.2	

PHASE DATA

Phase Combination	1	2	3	4	5	6	7	8
EB Left	P				NB Left	P		
Thru		P			Thru		P	
Right		P			Right		P	
Peds					Peds			
WB Left	P				SB Left	P		
Thru		P			Thru		P	
Right		P			Right		P	
Peds					Peds			
NB Right					EB Right			
SB Right					WB Right			
Green	9.0	20.2			13.6	23.2		
Yellow	3.0	3.0			3.0	3.0		
All Red	1.0	1.0			1.0	1.0		

Cycle Length: 82.0 se

VOLUME ADJUSTMENT AND SATURATION FLOW WORKSHEET

Volume Adjustment

	Eastbound			Westbound			Northbound			Southbound		
	L	T	R	L	T	R	L	T	R	L	T	R
Volume, V	113	279	179	28	160	85	179	207	0	79	305	122
PHF	0.90	0.90	0.90	0.90	0.90	0.90	0.90	0.90	0.90	0.90	0.90	0.90
Adj flow	126	310	171	31	178	67	199	230	0	88	339	80
No. Lanes	1	1	1	1	1	0	1	1	0	1	1	1
Lane group	L	T	R	L	TR		L	TR		L	T	R
Adj flow	126	310	171	31	245		199	230		88	339	80
Prop LTs		0.000			0.000			0.000			0.000	
Prop RTs	0.000		1.000	0.273			0.000			0.000		1.000

Saturation Flow Rate (see Exhibit 16-7 to determine the adjustment factors)

	Eastbound			Westbound			Northbound			Southbound		
LG	L	T	R	L	TR		L	TR		L	T	R
So	1900	1900	1900	1900	1900		1900	1900		1900	1900	1900
Lanes	1	1	1	1	1	0	1	1	0	1	1	1
fW	1.000	1.000	1.000	1.000	1.000		1.000	1.000		1.000	1.000	1.00
fHV	1.000	1.000	1.000	1.000	1.000		1.000	1.000		1.000	1.000	1.00
fG	1.000	1.000	1.000	1.000	1.000		1.000	1.000		1.000	1.000	1.00
fP	1.000	1.000	1.000	1.000	1.000		1.000	1.000		1.000	1.000	1.00
fBB	1.000	1.000	1.000	1.000	1.000		1.000	1.000		1.000	1.000	1.00
fA	1.00	1.00	1.00	1.00	1.00		1.00	1.00		1.00	1.00	1.00
fLU	1.00	1.00	1.00	1.00	1.00		1.00	1.00		1.00	1.00	1.00

fRT		1.000	0.850		0.959		1.000		1.000	0.85
fLT	0.950	1.000		0.950	1.000	0.950	1.000	0.950	1.000	
Sec.										
fLpb	1.000	1.000		1.000	1.000	1.000	1.000	1.000	1.000	
fRpb		1.000	1.000		1.000		1.000		1.000	1.00
S	1805	1900	1615	1805	1822	1805	1900	1805	1900	1615
Sec.										

CAPACITY AND LOS WORKSHEET

Capacity Analysis and Lane Group Capacity

Appr/ Mvmt	Lane Group	Adj Flow Rate (v)	Adj Sat Flow Rate (s)	Flow Ratio (v/s)	Green Ratio (g/C)	--Lane Group-- Capacity (c)	v/c Ratio
Eastbound							
Prot							
Perm							
Left	L	126	1805	# 0.07	0.11	198	0.64
Prot							
Perm							
Thru	T	310	1900	# 0.16	0.25	468	0.66
Right	R	171	1615	0.11	0.25	398	0.43
Westbound							
Prot							
Perm							
Left	L	31	1805	0.02	0.11	198	0.16
Prot							
Perm							
Thru	TR	245	1822	0.13	0.25	449	0.55
Right							
Northbound							
Prot							
Perm							
Left	L	199	1805	# 0.11	0.17	299	0.67
Prot							
Perm							
Thru	TR	230	1900	0.12	0.28	538	0.43
Right							
Southbound							
Prot							
Perm							
Left	L	88	1805	0.05	0.17	299	0.29
Prot							
Perm							
Thru	T	339	1900	# 0.18	0.28	538	0.63
Right	R	80	1615	0.05	0.28	457	0.18

Sum of flow ratios for critical lane groups, Yc = Sum (v/s) = 0.52
Total lost time per cycle, L = 16.00 sec
Critical flow rate to capacity ratio, Xc = (Yc)(C)/(C-L) = 0.65

Control Delay and LOS Determination

Appr/ Lane Grp	Ratios v/c	g/C	Unf Del d1	Prog Adj Fact	Lane Grp Cap	Incremental Factor k	Del d2	Res Del d3	Lane Group Delay	LOS	Approach Delay	LOS
Eastbound												
L	0.64	0.11	34.9	1.000	198	0.50	14.6	0.0	49.5	D		
T	0.66	0.25	27.8	1.000	468	0.50	7.2	0.0	35.0+	D	36.5	D

R	0.43	0.25	26.0	1.000	398	0.50	3.4	0.0	29.4	C		
Westbound												
L	0.16	0.11	33.1	1.000	198	0.50	1.7	0.0	34.7	C		
TR	0.55	0.25	26.9	1.000	449	0.50	4.7	0.0	31.6	C	32.0	C
Northbound												
L	0.67	0.17	32.1	1.000	299	0.50	11.2	0.0	43.2	D		
TR	0.43	0.28	24.0	1.000	538	0.50	2.5	0.0	26.5	C	34.2	C
Southbound												
L	0.29	0.17	30.0	1.000	299	0.50	2.5	0.0	32.5	C		
T	0.63	0.28	25.7	1.000	538	0.50	5.5	0.0	31.2	C	30.1	C
R	0.18	0.28	22.2	1.000	457	0.50	0.8	0.0	23.0	C		

Intersection delay = 33.5 (sec/veh) Intersection LOS = C

SUPPLEMENTAL PERMITTED LT WORKSHEET
for exclusive lefts

Input

		EB	WB	NB	SB
Cycle length, C	82.0 sec				
Total actual green time for LT lane group, G (s)					
Effective permitted green time for LT lane group, g(s)					
Opposing effective green time, go (s)					
Number of lanes in LT lane group, N					
Number of lanes in opposing approach, No					
Adjusted LT flow rate, VLT (veh/h)					
Proportion of LT in LT lane group, PLT					
Proportion of LT in opposing flow, PLTo					
Adjusted opposing flow rate, Vo (veh/h)					
Lost time for LT lane group, tL					
Computation					
LT volume per cycle, LTC=VLTC/3600					
Opposing lane util. factor, fLUo		1.00	1.00	1.00	1.0
Opposing flow, Volc=VoC/[3600(No)fLUo] (veh/ln/cyc)					
gf=G[exp(- a * (LTC ** b))]-tl, gf<=g					
Opposing platoon ratio, Rpo (refer Exhibit 16-11)					
Opposing Queue Ratio, qro=Max[1-Rpo(go/C),0]					
gq, (see Exhibit C16-4,5,6,7,8)					
gu=g-gq if gq>=gf, or = g-gf if gq<gf					
n=Max(gq-gf)/2,0)					
PTHo=1-PLTo					
PL*=PLT[1+(N-1)g/(gf+gu/EL1+4.24)]					
EL1 (refer to Exhibit C16-3)					
EL2=Max((1-Ptho**n)/Plto, 1.0)					
fmin=2(1+PL)/g or fmin=2(1+Pl)/g					
gdiff=max(gq-gf,0)					
fm=[gf/g]+[gu/g]/[1+PL(EL1-1)], (min=fmin;max=1.00)					
flt=fm=[gf/g]+[gu/g]/[1+PL(EL1-1)]+[gdiff/g]/[1+PL(EL2-1)],(fmin<=fm<=1.00)					
or flt=[fm+0.91(N-1)]/N**					
Left-turn adjustment, fLT					

For special case of single-lane approach opposed by multilane approach, see text.

* If Pl>=1 for shared left-turn lanes with N>1, then assume de-facto left-turn lane and redo calculations.

** For permitted left-turns with multiple exclusive left-turn lanes, flt=fm.
For special case of multilane approach opposed by single-lane approach
or when gf>gq, see text.

SUPPLEMENTAL PERMITTED LT WORKSHEET
for shared lefts

Input

	EB	WB	NB	SB
Cycle length, C 82.0 sec				
Total actual green time for LT lane group, G (s)				
Effective permitted green time for LT lane group, g(s)				
Opposing effective green time, go (s)				
Number of lanes in LT lane group, N				
Number of lanes in opposing approach, No				
Adjusted LT flow rate, VLT (veh/h)				
Proportion of LT in LT lane group, PLT	0.000	0.000	0.000	0.0
Proportion of LT in opposing flow, PLTo				
Adjusted opposing flow rate, Vo (veh/h)				
Lost time for LT lane group, tL				
Computation				
LT volume per cycle, LTC=VLTC/3600				
Opposing lane util. factor, fLUo	1.00	1.00	1.00	1.0
Opposing flow, Volc=VoC/[3600(No)fLUo] (veh/ln/cyc)				
gf=G[exp(- a * (LTC ** b))]-tl, gf<=g				
Opposing platoon ratio, Rpo (refer Exhibit 16-11)				
Opposing Queue Ratio, qro=Max[1-Rpo(go/C),0]				
gq, (see Exhibit C16-4,5,6,7,8)				
gu=g-gq if gq>=gf, or = g-gf if gq<gf				
n=Max(gq-gf)/2,0)				
PTHo=1-PLTo				
PL*=PLT[1+(N-1)g/(gf+gu/EL1+4.24)]				
EL1 (refer to Exhibit C16-3)				
EL2=Max((1-Ptho**n)/Plto, 1.0)				
fmin=2(1+PL)/g or fmin=2(1+Pl)/g				
gdiff=max(gq-gf,0)				
fm=[gf/g]+[gu/g]/[1+PL(EL1-1)], (min=fmin;max=1.00)				
flt=fm=[gf/g]+[gu/g]/[1+PL(EL1-1)]+[gdiff/g]/[1+PL(EL2-1)],(fmin<=fm<=1.00)				
or flt=[fm+0.91(N-1)]/N**				
Left-turn adjustment, fLT				

For special case of single-lane approach opposed by multilane approach,
see text.
* If Pl>=1 for shared left-turn lanes with N>1, then assume de-facto
left-turn lane and redo calculations.
** For permitted left-turns with multiple exclusive left-turn lanes, flt=fm.
For special case of multilane approach opposed by single-lane approach
or when gf>gq, see text.

SUPPLEMENTAL PEDESTRIAN-BICYCLE EFFECTS WORKSHEET

Permitted Left Turns

	EB	WB	NB	SB
Effective pedestrian green time, gp (s)				
Conflicting pedestrian volume, Vped (p/h)				
Pedestrian flow rate, Vpedg (p/h)				
OCCpedg				
Opposing queue clearing green, gq (s)				
Eff. ped. green consumed by opp. veh. queue, gq/gp				
OCCpedu				

Opposing flow rate, Vo (veh/h)
OCCr
Number of cross-street receiving lanes, Nrec
Number of turning lanes, Nturn
ApbT
Proportion of left turns, PLT
Proportion of left turns using protected phase, PLTA
Left-turn adjustment, fLpb
Permitted Right Turns
Effective pedestrian green time, gp (s)
Conflicting pedestrian volume, Vped (p/h)
Conflicting bicycle volume, Vbic (bicycles/h)
Vpedg
OCCpedg
Effective green, g (s)
Vbicg
OCCbicg
OCCr
Number of cross-street receiving lanes, Nrec
Number of turning lanes, Nturn
ApbT
Proportion right-turns, PRT
Proportion right-turns using protected phase, PRTA
Right turn adjustment, fRpb

SUPPLEMENTAL UNIFORM DELAY WORKSHEET

	EBLT	WBLT	NBLT	SBLT
Cycle length, C	82.0 sec			
Adj. LT vol from Vol Adjustment Worksheet, v				
v/c ratio from Capacity Worksheet, X				
Protected phase effective green interval, g (s)				
Opposing queue effective green interval, gq				
Unopposed green interval, gu				
Red time r=(C-g-gq-gu)				
Arrival rate, qa=v/(3600(max[X,1.0]))				
Protected ph. departure rate, Sp=s/3600				
Permitted ph. departure rate, Ss=s(gq+gu)/(gu*3600)				
XPerm				
XProt				
Case				
Queue at beginning of green arrow, Qa				
Queue at beginning of unsaturated green, Qu				
Residual queue, Qr				
Uniform Delay, d1				

DELAY/LOS WORKSHEET WITH INITIAL QUEUE

Appr/ Lane Group	Initial Unmet Demand Q veh	Dur. Unmet Demand t hrs.	Uniform Delay Unadj. ds	Uniform Delay Adj. d1 sec	Initial Queue Param. u	Final Unmet Demand Q veh	Initial Queue Delay d3 sec	Lane Group Delay d sec
Eastbound								

Westbound

Northbound

Southbound

Intersection Delay 33.5 sec/veh Intersection LOS C

BACK OF QUEUE WORKSHEET

	Eastbound			Westbound			Northbound			Southbound		
LaneGroup	L	T	R	L	TR		L	TR		L	T	R
Init Queue	0.0	0.0	0.0	0.0	0.0		0.0	0.0		0.0	0.0	0.0
Flow Rate	126	310	171	31	245		199	230		88	339	80
So	1900	1900	1900	1900	1900		1900	1900		1900	1900	1900
No.Lanes	1	1	1	1	1	0	1	1	0	1	1	1
SL	1805	1900	1615	1805	1822		1805	1900		1805	1900	1615
LnCapacity	198	468	398	198	449		299	538		299	538	457
Flow Ratio	0.07	0.16	0.11	0.02	0.13		0.11	0.12		0.05	0.18	0.05
v/c Ratio	0.64	0.66	0.43	0.16	0.55		0.67	0.43		0.29	0.63	0.18
Grn Ratio	0.11	0.25	0.25	0.11	0.25		0.17	0.28		0.17	0.28	0.28
I Factor		1.000			1.000			1.000			1.000	
AT or PVG	3	3	3	3	3		3	3		3	3	3
Pltn Ratio	1.00	1.00	1.00	1.00	1.00		1.00	1.00		1.00	1.00	1.00
PF2	1.00	1.00	1.00	1.00	1.00		1.00	1.00		1.00	1.00	1.00
Q1	2.7	6.4	3.3	0.6	4.9		4.3	4.3		1.8	6.7	1.4
kB	0.3	0.6	0.6	0.3	0.6		0.5	0.7		0.5	0.7	0.6
Q2	0.6	1.2	0.4	0.1	0.7		0.9	0.5		0.2	1.1	0.1
Q Average	3.3	7.5	3.7	0.7	5.6		5.1	4.8		1.9	7.9	1.5
Q Spacing	25.0	25.0	25.0	25.0	25.0		25.0	25.0		25.0	25.0	25.0
Q Storage	0	0	0	0	0		0	0		0	0	0
Q S Ratio												
70th Percentile Output:												
fB%	1.3	1.2	1.2	1.3	1.2		1.2	1.2		1.3	1.2	1.3
BOQ	4.1	9.2	4.6	0.9	6.9		6.3	5.9		2.5	9.6	1.9
QSRatio												
85th Percentile Output:												
fB%	1.6	1.5	1.5	1.7	1.5		1.5	1.5		1.6	1.5	1.6
BOQ	5.2	11.0	5.7	1.2	8.4		7.7	7.2		3.1	11.5	2.4
QSRatio												
90th Percentile Output:												
fB%	1.8	1.6	1.7	1.9	1.7		1.7	1.7		1.8	1.6	1.9
BOQ	5.8	12.1	6.4	1.4	9.3		8.6	8.1		3.6	12.6	2.8
QSRatio												
95th Percentile Output:												
fB%	2.1	1.8	2.1	2.5	1.9		2.0	2.0		2.3	1.8	2.3
BOQ	7.0	13.7	7.7	1.7	10.7		10.0	9.5		4.4	14.2	3.5
QSRatio												
98th Percentile Output:												

fB%	2.5	2.0	2.4	3.0	2.2		2.2	2.3		2.7	2.0	2.8
BOQ	8.2	15.3	8.9	2.1	12.2		11.4	10.9		5.3	15.8	4.2
QSRatio												

ERROR MESSAGES

No errors to report.

HCS2000: Signalized Intersections Release 4.1c

Analyst: Scott M.
Agency:
Date: 6/21/05
Period:
Project ID:
E/W St:

Inter.: Forest Pkwy / Ellenwood Rd
Area Type: All other areas
Jurisd:
Year : 2005

N/S St:

SIGNALIZED INTERSECTION SUMMARY

	Eastbound			Westbound			Northbound			Southbound		
	L	T	R	L	T	R	L	T	R	L	T	R
No. Lanes	1	2	0	1	2	0	1	1	1	1	1	1
LGConfig	L	TR		L	TR		L	T	R	L	T	R
Volume	132	496	107	145	556	57	104	237	160	85	294	117
Lane Width	12.0	12.0		12.0	12.0		12.0	12.0	12.0	12.0	12.0	12.0
RTOR Vol			50			50			50			50

Duration 0.25 Area Type: All other areas

Signal Operations

Phase Combination	1	2	3	4		5	6	7	8
EB Left	P	P			NB Left	P	P		
Thru		P			Thru		P		
Right		P			Right		P		
Peds					Peds				
WB Left	P	P			SB Left	P	P		
Thru		P			Thru		P		
Right		P			Right		P		
Peds					Peds				
NB Right					EB Right				
SB Right					WB Right				
Green	6.8	34.1				6.3	33.2		
Yellow	3.0	3.0				3.0	3.0		
All Red	1.0	1.0				1.0	1.0		

Cycle Length: 96.4 sec

Intersection Performance Summary

Appr/ Lane Grp	Lane Group Capacity	Adj Sat Flow Rate (s)	Ratios v/c	g/C	Lane Group Delay	LOS	Approach Delay	LOS
Eastbound								
L	324	1805	0.45	0.47	20.7	C		
TR	1257	3554	0.49	0.35	25.7	C	24.7	C
Westbound								
L	329	1805	0.49	0.47	21.4	C		
TR	1275	3603	0.49	0.35	25.7	C	24.8	C
Northbound								
L	375	1805	0.31	0.45	18.8	B		
T	654	1900	0.40	0.34	25.9	C	23.6	C
R	556	1615	0.22	0.34	23.3	C		
Southbound								
L	428	1805	0.22	0.45	17.2	B		
T	654	1900	0.50	0.34	27.7	C	24.9	C
R	556	1615	0.13	0.34	22.2	C		

Intersection Delay = 24.6 (sec/veh) Intersection LOS = C

HCS2000: Signalized Intersections Release 4.1c

Gdot
Gdot
#2 Capitol Square

Atlanta, Georgia 30334
Phone: Fax:
E-Mail:

OPERATIONAL ANALYSIS

Analyst: Scott M.
Agency/Co.:
Date Performed: 6/21/05
Analysis Time Period:
Intersection: Forest Pkwy / Ellenwood Rd
Area Type: All other areas
Jurisdiction:
Analysis Year: 2005
Project ID:

East/West Street North/South Street

VOLUME DATA

	Eastbound			Westbound			Northbound			Southbound		
	L	T	R	L	T	R	L	T	R	L	T	R
Volume	132	496	107	145	556	57	104	237	160	85	294	117
% Heavy Veh	0	0	0	0	0	0	0	0	0	0	0	0
PHF	0.90	0.90	0.90	0.90	0.90	0.90	0.90	0.90	0.90	0.90	0.90	0.90
PK 15 Vol	37	138	30	40	154	16	29	66	44	24	82	33
Hi Ln Vol												
% Grade		0			0			0			0	
Ideal Sat	1900	1900		1900	1900		1900	1900	1900	1900	1900	1900
ParkExist												
NumPark												
No. Lanes	1	2	0	1	2	0	1	1	1	1	1	1
LGConfig	L	TR		L	TR		L	T	R	L	T	R
Lane Width	12.0	12.0		12.0	12.0		12.0	12.0	12.0	12.0	12.0	12.0
RTOR Vol			50			50			50			50
Adj Flow	147	614		161	626		116	263	122	94	327	74
%InSharedLn												
Prop LTs	1.000	0.000		1.000	0.000		1.000	0.000		1.000	0.000	
Prop RTs		0.103			0.013			0.000	1.000		0.000	1.000
Peds Bikes	0			0			0			0		
Buses	0	0		0	0		0	0	0	0	0	0
%InProtPhase	0.0			0.0			0.0			0.0		

Duration 0.25 Area Type: All other areas

OPERATING PARAMETERS

	Eastbound			Westbound			Northbound			Southbound		
	L	T	R	L	T	R	L	T	R	L	T	R
Init Unmet	0.0	0.0		0.0	0.0		0.0	0.0	0.0	0.0	0.0	0.0

Arriv. Type	3	3		3	3		3	3	3		3	3	3			
Unit Ext.	3.0	3.0		3.0	3.0		3.0	3.0	3.0		3.0	3.0	3.0			
I Factor		1.000			1.000			1.000				1.000				
Lost Time	2.0	2.0		2.0	2.0		2.0	2.0	2.0		2.0	2.0	2.0			
Ext of g	2.0	2.0		2.0	2.0		2.0	2.0	2.0		2.0	2.0	2.0			
Ped Min g		3.2			3.2			3.2				3.2				

PHASE DATA

Phase Combination		1	2	3	4			5	6	7	8
EB	Left	P	P			NB	Left	P	P		
	Thru		P				Thru		P		
	Right		P				Right		P		
	Peds						Peds				
WB	Left	P	P			SB	Left	P	P		
	Thru		P				Thru		P		
	Right		P				Right		P		
	Peds						Peds				
NB	Right					EB	Right				
SB	Right					WB	Right				
Green		6.8	34.1					6.3	33.2		
Yellow		3.0	3.0					3.0	3.0		
All Red		1.0	1.0					1.0	1.0		

Cycle Length: 96.4 se

VOLUME ADJUSTMENT AND SATURATION FLOW WORKSHEET

Volume Adjustment

	Eastbound			Westbound			Northbound			Southbound		
	L	T	R	L	T	R	L	T	R	L	T	R
Volume, V	132	496	107	145	556	57	104	237	160	85	294	117
PHF	0.90	0.90	0.90	0.90	0.90	0.90	0.90	0.90	0.90	0.90	0.90	0.90
Adj flow	147	551	63	161	618	8	116	263	122	94	327	74
No. Lanes	1	2	0	1	2	0	1	1	1	1	1	1
Lane group	L	TR		L	TR		L	T	R	L	T	R
Adj flow	147	614		161	626		116	263	122	94	327	74
Prop LTs	1.000	0.000		1.000	0.000		1.000	0.000		1.000	0.000	
Prop RTs	0.103			0.013			0.000	1.000		0.000	1.000	

Saturation Flow Rate (see Exhibit 16-7 to determine the adjustment factors)

	Eastbound			Westbound			Northbound			Southbound		
LG	L	TR		L	TR		L	T	R	L	T	R
So	1900	1900		1900	1900		1900	1900	1900	1900	1900	1900
Lanes	1	2	0	1	2	0	1	1	1	1	1	1
fW	1.000	1.000		1.000	1.000		1.000	1.000	1.000	1.000	1.000	1.00
fHV	1.000	1.000		1.000	1.000		1.000	1.000	1.000	1.000	1.000	1.00
fG	1.000	1.000		1.000	1.000		1.000	1.000	1.000	1.000	1.000	1.00
fP	1.000	1.000		1.000	1.000		1.000	1.000	1.000	1.000	1.000	1.00
fBB	1.000	1.000		1.000	1.000		1.000	1.000	1.000	1.000	1.000	1.00
fA	1.00	1.00		1.00	1.00		1.00	1.00	1.00	1.00	1.00	1.00
fLU	1.00	0.95		1.00	0.95		1.00	1.00	1.00	1.00	1.00	1.00

fRT		0.985		0.998		1.000	0.850		1.000	0.85
fLT	0.950	1.000	0.950	1.000	0.950	1.000		0.950	1.000	
Sec.	0.263		0.269		0.351			0.423		
fLpb	1.000	1.000	1.000	1.000	1.000	1.000		1.000	1.000	
fRpb		1.000		1.000		1.000	1.000		1.000	1.00
S	1805	3554	1805	3603	1805	1900	1615	1805	1900	1615
Sec.	499		512		666			804		

CAPACITY AND LOS WORKSHEET

Capacity Analysis and Lane Group Capacity

Appr/ Mvmt	Lane Group	Adj Flow Rate (v)	Adj Sat Flow Rate (s)	Flow Ratio (v/s)	Green Ratio (g/C)	--Lane Group-- Capacity (c)	v/c Ratio
Eastbound							
Prot		127	1805	0.07	0.071	127	1.00
Perm		20	499	0.04	0.395	197	0.10
Left	L	147			0.47	324	0.45
Prot							
Perm							
Thru	TR	614	3554	0.17	0.35	1257	0.49
Right							
Westbound							
Prot		127	1805	# 0.07	0.071	127	1.00
Perm		34	512	0.07	0.395	202	0.17
Left	L	161			0.47	329	0.49
Prot							
Perm							
Thru	TR	626	3603	# 0.17	0.35	1275	0.49
Right							
Northbound							
Prot		116	1805	# 0.06	0.065	118	0.98
Perm		0	666	0.00	0.386	257	0.00
Left	L	116			0.45	375	0.31
Prot							
Perm							
Thru	T	263	1900	0.14	0.34	654	0.40
Right	R	122	1615	0.08	0.34	556	0.22
Southbound							
Prot		94	1805	0.05	0.065	118	0.80
Perm		0	804	0.00	0.386	310	0.00
Left	L	94			0.45	428	0.22
Prot							
Perm							
Thru	T	327	1900	# 0.17	0.34	654	0.50
Right	R	74	1615	0.05	0.34	556	0.13

Sum of flow ratios for critical lane groups, Yc = Sum (v/s) = 0.48
Total lost time per cycle, L = 16.00 sec
Critical flow rate to capacity ratio, Xc = (Yc)(C)/(C-L) = 0.58

Control Delay and LOS Determination

Appr/ Lane Grp	Ratios v/c	g/C	Unf Del d1	Prog Adj Fact	Lane Grp Cap	Incremental Factor k	Del d2	Res Del d3	Lane Group Delay	LOS	Approach Delay	LOS
Eastbound												
L	0.45	0.47	16.2	1.000	324	0.50	4.5	0.0	20.7	C		
TR	0.49	0.35	24.3	1.000	1257	0.50	1.4	0.0	25.7	C	24.7	C

Westbound												
L	0.49	0.47	16.3	1.000	329	0.50	5.1	0.0	21.4	C		
TR	0.49	0.35	24.4	1.000	1275	0.50	1.4	0.0	25.7	C	24.8	C
Northbound												
L	0.31	0.45	16.7	1.000	375	0.50	2.1	0.0	18.8	B		
T	0.40	0.34	24.0	1.000	654	0.50	1.8	0.0	25.9	C	23.6	C
R	0.22	0.34	22.4	1.000	556	0.50	0.9	0.0	23.3	C		
Southbound												
L	0.22	0.45	16.0	1.000	428	0.50	1.2	0.0	17.2	B		
T	0.50	0.34	25.0	1.000	654	0.50	2.7	0.0	27.7	C	24.9	C
R	0.13	0.34	21.7	1.000	556	0.50	0.5	0.0	22.2	C		

Intersection delay = 24.6 (sec/veh) Intersection LOS = C

SUPPLEMENTAL PERMITTED LT WORKSHEET
for exclusive lefts

Input

	EB	WB	NB	SB
Cycle length, C 96.4 sec				
Total actual green time for LT lane group, G (s)	44.9	44.9	43.5	43.
Effective permitted green time for LT lane group, g(s)	38.1	38.1	37.2	37.
Opposing effective green time, go (s)	34.1	34.1	33.2	33.
Number of lanes in LT lane group, N	1	1	1	1
Number of lanes in opposing approach, No	2	2	1	1
Adjusted LT flow rate, VLT (veh/h)	147	161	116	94
Proportion of LT in LT lane group, PLT	1.000	1.000	1.000	1.0
Proportion of LT in opposing flow, PLTo	0.00	0.00	0.00	0.0
Adjusted opposing flow rate, Vo (veh/h)	626	614	327	263
Lost time for LT lane group, tL	4.00	4.00	4.00	4.0
Computation				
LT volume per cycle, LTC=VLTC/3600	3.94	4.31	3.11	2.5
Opposing lane util. factor, fLUo	0.95	0.95	1.00	1.0
Opposing flow, Volc=VoC/[3600(No)fLUo] (veh/ln/cyc)	8.82	8.65	8.76	7.0
gf=G[exp(- a * (LTC ** b))]-tl, gf<=g	0.0	0.0	0.0	0.0
Opposing platoon ratio, Rpo (refer Exhibit 16-11)	1.00	1.00	1.00	1.0
Opposing Queue Ratio, qro=Max[1-Rpo(go/C),0]	0.65	0.65	0.66	0.6
gq, (see Exhibit C16-4,5,6,7,8)	13.96	13.63	14.03	10.
gu=g-gq if gq>=gf, or = g-gf if gq<gf	24.14	24.47	23.17	26.
n=Max(gq-gf)/2,0)	6.98	6.82	7.02	5.4
PTHo=1-PLTo	1.00	1.00	1.00	1.0
PL*=PLT[1+(N-1)g/(gf+gu/EL1+4.24)]	1.00	1.00	1.00	1.0
EL1 (refer to Exhibit C16-3)	2.41	2.38	1.78	1.6
EL2=Max((1-Ptho**n)/Plto, 1.0)				
fmin=2(1+PL)/g or fmin=2(1+Pl)/g	0.10	0.10	0.11	0.1
gdiff=max(gq-gf,0)	0.00	0.00	0.00	0.0
fm=[gf/g]+[gu/g]/[1+PL(EL1-1)], (min=fmin;max=1.00)	0.26	0.27	0.35	0.4
flt=fm=[gf/g]+[gu/g]/[1+PL(EL1-1)]+[gdiff/g]/[1+PL(EL2-1)],(fmin<=fm<=1.00)				
or flt=[fm+0.91(N-1)]/N**				
Left-turn adjustment, fLT	0.263	0.269	0.351	0.4

For special case of single-lane approach opposed by multilane approach, see text.

* If Pl>=1 for shared left-turn lanes with N>1, then assume de-facto left-turn lane and redo calculations.

** For permitted left-turns with multiple exclusive left-turn lanes, flt=fm.
For special case of multilane approach opposed by single-lane approach
or when gf>gq, see text.

SUPPLEMENTAL PERMITTED LT WORKSHEET
for shared lefts

Input

	EB	WB	NB	SB
Cycle length, C 96.4 sec				
Total actual green time for LT lane group, G (s)				
Effective permitted green time for LT lane group, g(s)				
Opposing effective green time, go (s)				
Number of lanes in LT lane group, N				
Number of lanes in opposing approach, No				
Adjusted LT flow rate, VLT (veh/h)				
Proportion of LT in LT lane group, PLT	0.000	0.000	0.000	0.0
Proportion of LT in opposing flow, PLTo				
Adjusted opposing flow rate, Vo (veh/h)				
Lost time for LT lane group, tL				
Computation				
LT volume per cycle, LTC=VLTC/3600				
Opposing lane util. factor, fLUo	0.95	0.95	1.00	1.0
Opposing flow, Volc=VoC/[3600(No)fLUo] (veh/ln/cyc)				
gf=G[exp(- a * (LTC ** b))]-tl, gf<=g				
Opposing platoon ratio, Rpo (refer Exhibit 16-11)				
Opposing Queue Ratio, qro=Max[1-Rpo(go/C),0]				
gq, (see Exhibit C16-4,5,6,7,8)				
gu=g-gq if gq>=gf, or = g-gf if gq<gf				
n=Max(gq-gf)/2,0)				
PTHo=1-PLTo				
PL*=PLT[1+(N-1)g/(gf+gu/EL1+4.24)]				
EL1 (refer to Exhibit C16-3)				
EL2=Max((1-Ptho**n)/Plto, 1.0)				
fmin=2(1+PL)/g or fmin=2(1+Pl)/g				
gdiff=max(gq-gf,0)				
fm=[gf/g]+[gu/g]/[1+PL(EL1-1)], (min=fmin;max=1.00)				
flt=fm=[gf/g]+[gu/g]/[1+PL(EL1-1)]+[gdiff/g]/[1+PL(EL2-1)],(fmin<=fm<=1.00)				
or flt=[fm+0.91(N-1)]/N**				
Left-turn adjustment, fLT				

For special case of single-lane approach opposed by multilane approach,
see text.
* If Pl>=1 for shared left-turn lanes with N>1, then assume de-facto
left-turn lane and redo calculations.
** For permitted left-turns with multiple exclusive left-turn lanes, flt=fm.
For special case of multilane approach opposed by single-lane approach
or when gf>gq, see text.

SUPPLEMENTAL PEDESTRIAN-BICYCLE EFFECTS WORKSHEET

Permitted Left Turns

	EB	WB	NB	SB
Effective pedestrian green time, gp (s)				
Conflicting pedestrian volume, Vped (p/h)				
Pedestrian flow rate, Vpedg (p/h)				
OCCpedg				
Opposing queue clearing green, gq (s)				
Eff. ped. green consumed by opp. veh. queue, gq/gp				
OCCpedu				

Opposing flow rate, Vo (veh/h)
OCCr
Number of cross-street receiving lanes, Nrec
Number of turning lanes, Nturn
ApbT
Proportion of left turns, PLT
Proportion of left turns using protected phase, PLTA
Left-turn adjustment, fLpb
Permitted Right Turns
Effective pedestrian green time, gp (s)
Conflicting pedestrian volume, Vped (p/h)
Conflicting bicycle volume, Vbic (bicycles/h)
Vpedg
OCCpedg
Effective green, g (s)
Vbicg
OCCbicg
OCCr
Number of cross-street receiving lanes, Nrec
Number of turning lanes, Nturn
ApbT
Proportion right-turns, PRT
Proportion right-turns using protected phase, PRTA
Right turn adjustment, fRpb

SUPPLEMENTAL UNIFORM DELAY WORKSHEET

		EBLT	WBLT	NBLT	SBLT
Cycle length, C	96.4 sec				
Adj. LT vol from Vol Adjustment Worksheet, v		147	161	116	94
v/c ratio from Capacity Worksheet, X		0.45	0.49	0.31	0.22
Protected phase effective green interval, g (s)		6.8	6.8	6.3	6.3
Opposing queue effective green interval, gq		13.96	13.63	14.03	10.8
Unopposed green interval, gu		24.14	24.47	23.17	26.3
Red time r=(C-g-gq-gu)		51.5	51.5	52.9	52.9
Arrival rate, qa=v/(3600(max[X,1.0]))		0.04	0.04	0.03	0.03
Protected ph. departure rate, Sp=s/3600		0.501	0.501	0.501	0.50
Permitted ph. departure rate, Ss=s(gq+gu)/(gu*3600)		0.22	0.22	0.30	0.31
XPerm		0.29	0.31	0.17	0.12
XProt		0.70	0.76	0.60	0.49
Case		1	1	1	1
Queue at beginning of green arrow, Qa		2.10	2.30	1.70	1.38
Queue at beginning of unsaturated green, Qu		0.57	0.61	0.45	0.28
Residual queue, Qr		0.00	0.00	0.00	0.00
Uniform Delay, d1		16.2	16.3	16.7	16.0

DELAY/LOS WORKSHEET WITH INITIAL QUEUE

Appr/ Lane Group	Initial Unmet Demand Q veh	Dur. Unmet Demand t hrs.	Uniform Delay Unadj. ds	Uniform Delay Adj. d1 sec	Initial Queue Param. u	Final Unmet Demand Q veh	Initial Queue Delay d3 sec	Lane Group Delay d sec
Eastbound								

Westbound

Northbound

Southbound

Intersection Delay 24.6 sec/veh Intersection LOS C

BACK OF QUEUE WORKSHEET

	Eastbound			Westbound			Northbound			Southbound		
LaneGroup	L	TR		L	TR		L	T	R	L	T	R
Init Queue	0.0	0.0		0.0	0.0		0.0	0.0	0.0	0.0	0.0	0.0
Flow Rate	147	323		161	329		116	263	122	94	327	74
So	1900	1900		1900	1900		1900	1900	1900	1900	1900	1900
No.Lanes	1	2	0	1	2	0	1	1	1	1	1	1
SL	1805	1870		1805	1896		1805	1900	1615	1805	1900	1615
LnCapacity	324	661		329	671		375	654	556	428	654	556
Flow Ratio	0.08	0.17		0.09	0.17		0.06	0.14	0.08	0.05	0.17	0.05
v/c Ratio	0.45	0.49		0.49	0.49		0.31	0.40	0.22	0.22	0.50	0.13
Grn Ratio	0.47	0.35		0.47	0.35		0.45	0.34	0.34	0.45	0.34	0.34
I Factor		1.000			1.000			1.000			1.000	
AT or PVG	3	3		3	3		3	3	3	3	3	3
Pltn Ratio	1.00	1.00		1.00	1.00		1.00	1.00	1.00	1.00	1.00	1.00
PF2	1.00	1.00		1.00	1.00		1.00	1.00	1.00	1.00	1.00	1.00
Q1	2.2	6.8		2.4	6.9		1.7	5.4	2.3	1.4	6.9	1.4
kB	1.1	0.9		1.1	0.9		1.0	0.9	0.8	1.0	0.9	0.8
Q2	0.8	0.8		1.0	0.9		0.5	0.6	0.2	0.3	0.9	0.1
Q Average	3.0	7.6		3.4	7.7		2.2	6.0	2.5	1.7	7.8	1.5
Q Spacing	25.0	25.0		25.0	25.0		25.0	25.0	25.0	25.0	25.0	25.0
Q Storage	0	0		0	0		0	0	0	0	0	0
Q S Ratio												
70th Percentile Output:												
fB%	1.3	1.2		1.3	1.2		1.3	1.2	1.3	1.3	1.2	1.3
BOQ	3.8	9.3		4.2	9.5		2.8	7.3	3.2	2.2	9.5	1.9
QSRatio												
85th Percentile Output:												
fB%	1.6	1.5		1.6	1.5		1.6	1.5	1.6	1.6	1.5	1.6
BOQ	4.7	11.1		5.2	11.3		3.5	8.9	4.0	2.7	11.4	2.4
QSRatio												
90th Percentile Output:												
fB%	1.8	1.6		1.8	1.6		1.8	1.7	1.8	1.9	1.6	1.9
BOQ	5.4	12.2		5.9	12.4		4.0	9.8	4.6	3.1	12.5	2.8
QSRatio												
95th Percentile Output:												
fB%	2.1	1.8		2.1	1.8		2.2	1.9	2.2	2.3	1.8	2.3
BOQ	6.5	13.8		7.1	14.0		4.9	11.3	5.6	3.9	14.1	3.5
QSRatio												
98th Percentile Output:												

fB%	2.5	2.0	2.5	2.0	2.7	2.2	2.6	2.8	2.0	2.8
BOQ	7.6	15.4	8.3	15.6	5.9	12.8	6.6	4.7	15.7	4.2
QSRatio										

ERROR MESSAGES

No errors to report.

HCS2000: Signalized Intersections Release 4.1c

Analyst: Scott M.
Agency:
Date: 6/22/05
Period:
Project ID:
E/W St:

Inter.: Campbell Blvd
Area Type: All other areas
Jurisd:
Year : 2005

N/S St:

SIGNALIZED INTERSECTION SUMMARY

	Eastbound			Westbound			Northbound			Southbound		
	L	T	R	L	T	R	L	T	R	L	T	R
No. Lanes	0	1	0	1	0	1	1	1	0	1	1	0
LGConfig		LTR		L		R	L	TR		L	TR	
Volume	10	12	0	57		75	18	345	55	10	496	0
Lane Width		12.0		12.0		12.0	12.0	12.0		12.0	12.0	
RTOR Vol			25			25			25			25

Duration 0.25 Area Type: All other areas

Signal Operations

Phase Combination	1	2	3	4			5	6	7	8
EB Left	P				NB	Left	P	P		
Thru	P					Thru		P		
Right	P					Right		P		
Peds						Peds				
WB Left		P			SB	Left	P	P		
Thru						Thru		P		
Right		P				Right		P		
Peds						Peds				
NB Right					EB	Right				
SB Right					WB	Right				
Green	6.7	7.2					6.1	51.9		
Yellow	3.0	3.0					3.0	3.0		
All Red	1.0	1.0					1.0	1.0		

Cycle Length: 87.9 sec

Intersection Performance Summary

Appr/ Lane Grp	Lane Group Capacity	Adj Sat Flow Rate (s)	Ratios v/c	Ratios g/C	Lane Group Delay	Lane Group LOS	Approach Delay	Approach LOS
Eastbound								
LTR	142	1857	0.17	0.08	40.6	D	40.6	D
Westbound								
L	148	1805	0.43	0.08	47.1	D		
							47.6	D
R	132	1615	0.42	0.08	48.1	D		
Northbound								
L	521	1805	0.04	0.71	5.5	A		
TR	1108	1877	0.38	0.59	10.4	B	10.2	B
Southbound								
L	631	1805	0.02	0.71	4.6	A		
TR	1122	1900	0.49	0.59	11.9	B	11.8	B

Intersection Delay = 15.5 (sec/veh) Intersection LOS = B

HCS2000: Signalized Intersections Release 4.1c

Gdot
Gdot
#2 Capitol Square

Atlanta, Georgia 30334
Phone: Fax:
E-Mail:

OPERATIONAL ANALYSIS

Analyst: Scott M.
Agency/Co.:
Date Performed: 6/22/05
Analysis Time Period:
Intersection: Campbell Blvd
Area Type: All other areas
Jurisdiction:
Analysis Year: 2005
Project ID:

East/West Street North/South Street

VOLUME DATA

	Eastbound			Westbound			Northbound			Southbound		
	L	T	R	L	T	R	L	T	R	L	T	R
Volume	10	12	0	57		75	18	345	55	10	496	0
% Heavy Veh	0	0	0	0		0	0	0	0	0	0	0
PHF	0.90	0.90	0.90	0.90		0.90	0.90	0.90	0.90	0.90	0.90	0.90
PK 15 Vol	3	3	0	16		21	5	96	15	3	138	0
Hi Ln Vol												
% Grade		0			0			0			0	
Ideal Sat		1900		1900		1900	1900	1900		1900	1900	
ParkExist												
NumPark												
No. Lanes	0	1	0	1	0	1	1	1	0	1	1	0
LGConfig		LTR		L		R	L	TR		L	TR	
Lane Width		12.0		12.0		12.0	12.0	12.0		12.0	12.0	
RTOR Vol			25			25			25			25
Adj Flow		24		63		56	20	416		11	551	
%InSharedLn												
Prop LTs		0.458					1.000	0.000		1.000	0.000	
Prop RTs	0.000					1.000	0.079			0.000		
Peds Bikes	0			0			0			0		
Buses		0		0		0	0	0		0	0	
%InProtPhase							0.0			0.0		

Duration 0.25 Area Type: All other areas

OPERATING PARAMETERS

	Eastbound			Westbound			Northbound			Southbound		
	L	T	R	L	T	R	L	T	R	L	T	R
Init Unmet		0.0		0.0		0.0	0.0	0.0		0.0	0.0	

Arriv. Type	3	3 3	3 3	3 3
Unit Ext.	3.0	3.0 3.0	3.0 3.0	3.0 3.0
I Factor	1.000	1.000	1.000	1.000
Lost Time	2.0	2.0 2.0	2.0 2.0	2.0 2.0
Ext of g	2.0	2.0 2.0	2.0 2.0	2.0 2.0
Ped Min g	3.2	3.2	3.2	3.2

PHASE DATA

Phase Combination	1	2	3	4	5	6	7	8
EB Left	P				NB Left	P	P	
Thru	P				Thru		P	
Right	P				Right		P	
Peds					Peds			
WB Left		P			SB Left	P	P	
Thru					Thru		P	
Right		P			Right		P	
Peds					Peds			
NB Right					EB Right			
SB Right					WB Right			
Green	6.7	7.2			6.1	51.9		
Yellow	3.0	3.0			3.0	3.0		
All Red	1.0	1.0			1.0	1.0		

Cycle Length: 87.9 se

VOLUME ADJUSTMENT AND SATURATION FLOW WORKSHEET

Volume Adjustment

	Eastbound			Westbound			Northbound			Southbound		
	L	T	R	L	T	R	L	T	R	L	T	R
Volume, V	10	12	0	57		75	18	345	55	10	496	0
PHF	0.90	0.90	0.90	0.90		0.90	0.90	0.90	0.90	0.90	0.90	0.90
Adj flow	11	13	0	63		56	20	383	33	11	551	0
No. Lanes	0	1	0	1	0	1	1	1	0	1	1	0
Lane group		LTR		L		R	L	TR		L	TR	
Adj flow		24		63		56	20	416		11	551	
Prop LTs		0.458					1.000	0.000		1.000	0.000	
Prop RTs		0.000				1.000		0.079			0.000	

Saturation Flow Rate (see Exhibit 16-7 to determine the adjustment factors)

	Eastbound			Westbound			Northbound			Southbound		
LG	LTR			L		R	L	TR		L	TR	
So	1900			1900		1900	1900	1900		1900	1900	
Lanes	0	1	0	1	0	1	1	1	0	1	1	0
fW		1.000		1.000		1.000	1.000	1.000		1.000	1.000	
fHV		1.000		1.000		1.000	1.000	1.000		1.000	1.000	
fG		1.000		1.000		1.000	1.000	1.000		1.000	1.000	
fP		1.000		1.000		1.000	1.000	1.000		1.000	1.000	
fBB		1.000		1.000		1.000	1.000	1.000		1.000	1.000	
fA		1.00		1.00		1.00	1.00	1.00		1.00	1.00	
fLU		1.00		1.00		1.00	1.00	1.00		1.00	1.00	

fRT	1.000		0.850		0.988		1.000
fLT	0.978	0.950		0.950	1.000	0.950	1.000
Sec.				0.328		0.418	
fLpb	1.000	1.000		1.000	1.000	1.000	1.000
fRpb	1.000		1.000		1.000		1.000
S	1857	1805	1615	1805	1877	1805	1900
Sec.				623		795	

CAPACITY AND LOS WORKSHEET

Capacity Analysis and Lane Group Capacity

Appr/ Mvmt	Lane Group	Adj Flow Rate (v)	Adj Sat Flow Rate (s)		Flow Ratio (v/s)	Green Ratio (g/C)	--Lane Group-- Capacity (c)	v/c Ratio
Eastbound								
Prot								
Perm								
Left								
Prot								
Perm								
Thru	LTR	24	1857	#	0.01	0.08	142	0.17
Right								
Westbound								
Prot								
Perm								
Left	L	63	1805	#	0.03	0.08	148	0.43
Prot								
Perm								
Thru								
Right	R	56	1615		0.03	0.08	132	0.42
Northbound								
Prot		20	1805	#	0.01	0.069	125	0.16
Perm		0	623		0.00	0.636	396	0.00
Left	L	20				0.71	521	0.04
Prot								
Perm								
Thru	TR	416	1877		0.22	0.59	1108	0.38
Right								
Southbound								
Prot		11	1805		0.01	0.069	125	0.09
Perm		0	795		0.00	0.636	506	0.00
Left	L	11				0.71	631	0.02
Prot								
Perm								
Thru	TR	551	1900	#	0.29	0.59	1122	0.49
Right								

Sum of flow ratios for critical lane groups, Yc = Sum (v/s) = 0.35
Total lost time per cycle, L = 16.00 sec
Critical flow rate to capacity ratio, Xc = (Yc)(C)/(C-L) = 0.43

Control Delay and LOS Determination

Appr/ Lane Grp	Ratios v/c	g/C	Unf Del d1	Prog Adj Fact	Lane Grp Cap	Incremental Factor k	Del d2	Res Del d3	Lane Group Delay	LOS	Approach Delay	LOS
Eastbound												
LTR	0.17	0.08	38.0	1.000	142	0.50	2.6	0.0	40.6	D	40.6	D

Westbound												
L	0.43	0.08	38.4	1.000	148	0.50	8.7	0.0	47.1	D		
											47.6	D
R	0.42	0.08	38.4	1.000	132	0.50	9.7	0.0	48.1	D		
Northbound												
L	0.04	0.71	5.3	1.000	521	0.50	0.1	0.0	5.5	A		
TR	0.38	0.59	9.5	1.000	1108	0.50	1.0	0.0	10.4	B	10.2	B
Southbound												
L	0.02	0.71	4.5	1.000	631	0.50	0.1	0.0	4.6	A		
TR	0.49	0.59	10.4	1.000	1122	0.50	1.5	0.0	11.9	B	11.8	B

Intersection delay = 15.5 (sec/veh) Intersection LOS = B

SUPPLEMENTAL PERMITTED LT WORKSHEET
for exclusive lefts

Input

	EB	WB	NB	SB
Cycle length, C 87.9 sec				
Total actual green time for LT lane group, G (s)			62.0	62.
Effective permitted green time for LT lane group, g(s)			55.9	55.
Opposing effective green time, go (s)			51.9	51.
Number of lanes in LT lane group, N			1	1
Number of lanes in opposing approach, No			1	1
Adjusted LT flow rate, VLT (veh/h)			20	11
Proportion of LT in LT lane group, PLT			1.000	1.0
Proportion of LT in opposing flow, PLTo			0.00	0.0
Adjusted opposing flow rate, Vo (veh/h)			551	416
Lost time for LT lane group, tL			4.00	4.0
Computation				
LT volume per cycle, LTC=VLTC/3600			0.49	0.2
Opposing lane util. factor, fLUo		1.00	1.00	1.0
Opposing flow, Volc=VoC/[3600(No)fLUo] (veh/ln/cyc)			13.45	10.
gf=G[exp(- a * (LTC ** b))]-tl, gf<=g			0.0	0.0
Opposing platoon ratio, Rpo (refer Exhibit 16-11)			1.00	1.0
Opposing Queue Ratio, qro=Max[1-Rpo(go/C),0]			0.41	0.4
gq, (see Exhibit C16-4,5,6,7,8)			15.88	10.
gu=g-gq if gq>=gf, or = g-gf if gq<gf			40.02	45.
n=Max(gq-gf)/2,0)			7.94	5.4
PTHo=1-PLTo			1.00	1.0
PL*=PLT[1+(N-1)g/(gf+gu/EL1+4.24)]			1.00	1.0
EL1 (refer to Exhibit C16-3)			2.18	1.9
EL2=Max((1-Ptho**n)/Plto, 1.0)				
fmin=2(1+PL)/g or fmin=2(1+Pl)/g			0.07	0.0
gdiff=max(gq-gf,0)			0.00	0.0
fm=[gf/g]+[gu/g]/[1+PL(EL1-1)], (min=fmin;max=1.00)			0.33	0.4
flt=fm=[gf/g]+[gu/g]/[1+PL(EL1-1)]+[gdiff/g]/[1+PL(EL2-1)],(fmin<=fm<=1.00)				
or flt=[fm+0.91(N-1)]/N**				
Left-turn adjustment, fLT			0.328	0.4

For special case of single-lane approach opposed by multilane approach, see text.

* If Pl>=1 for shared left-turn lanes with N>1, then assume de-facto left-turn lane and redo calculations.

** For permitted left-turns with multiple exclusive left-turn lanes, flt=fm.
For special case of multilane approach opposed by single-lane approach
or when gf>gq, see text.

SUPPLEMENTAL PERMITTED LT WORKSHEET
for shared lefts

Input

	EB	WB	NB	SB
Cycle length, C 87.9 sec				
Total actual green time for LT lane group, G (s)				
Effective permitted green time for LT lane group, g(s)				
Opposing effective green time, go (s)				
Number of lanes in LT lane group, N				
Number of lanes in opposing approach, No				
Adjusted LT flow rate, VLT (veh/h)				
Proportion of LT in LT lane group, PLT	0.458		0.000	0.0
Proportion of LT in opposing flow, PLTo				
Adjusted opposing flow rate, Vo (veh/h)				
Lost time for LT lane group, tL				
Computation				
LT volume per cycle, LTC=VLTC/3600				
Opposing lane util. factor, fLUo		1.00	1.00	1.0
Opposing flow, Volc=VoC/[3600(No)fLUo] (veh/ln/cyc)				
gf=G[exp(- a * (LTC ** b))]-tl, gf<=g				
Opposing platoon ratio, Rpo (refer Exhibit 16-11)				
Opposing Queue Ratio, qro=Max[1-Rpo(go/C),0]				
gq, (see Exhibit C16-4,5,6,7,8)				
gu=g-gq if gq>=gf, or = g-gf if gq<gf				
n=Max(gq-gf)/2,0)				
PTHo=1-PLTo				
PL*=PLT[1+(N-1)g/(gf+gu/EL1+4.24)]				
EL1 (refer to Exhibit C16-3)				
EL2=Max((1-Ptho**n)/Plto, 1.0)				
fmin=2(1+PL)/g or fmin=2(1+Pl)/g				
gdiff=max(gq-gf,0)				
fm=[gf/g]+[gu/g]/[1+PL(EL1-1)], (min=fmin;max=1.00)				
flt=fm=[gf/g]+[gu/g]/[1+PL(EL1-1)]+[gdiff/g]/[1+PL(EL2-1)],(fmin<=fm<=1.00)				
or flt=[fm+0.91(N-1)]/N**				
Left-turn adjustment, fLT				

For special case of single-lane approach opposed by multilane approach,
see text.
* If Pl>=1 for shared left-turn lanes with N>1, then assume de-facto
left-turn lane and redo calculations.
** For permitted left-turns with multiple exclusive left-turn lanes, flt=fm.
For special case of multilane approach opposed by single-lane approach
or when gf>gq, see text.

SUPPLEMENTAL PEDESTRIAN-BICYCLE EFFECTS WORKSHEET

Permitted Left Turns

	EB	WB	NB	SB
Effective pedestrian green time, gp (s)				
Conflicting pedestrian volume, Vped (p/h)				
Pedestrian flow rate, Vpedg (p/h)				
OCCpedg				
Opposing queue clearing green, gq (s)				
Eff. ped. green consumed by opp. veh. queue, gq/gp				
OCCpedu				

Opposing flow rate, Vo (veh/h)
OCCr
Number of cross-street receiving lanes, Nrec
Number of turning lanes, Nturn
ApbT
Proportion of left turns, PLT
Proportion of left turns using protected phase, PLTA
Left-turn adjustment, fLpb
Permitted Right Turns
Effective pedestrian green time, gp (s)
Conflicting pedestrian volume, Vped (p/h)
Conflicting bicycle volume, Vbic (bicycles/h)
Vpedg
OCCpedg
Effective green, g (s)
Vbicg
OCCbicg
OCCr
Number of cross-street receiving lanes, Nrec
Number of turning lanes, Nturn
ApbT
Proportion right-turns, PRT
Proportion right-turns using protected phase, PRTA
Right turn adjustment, fRpb

SUPPLEMENTAL UNIFORM DELAY WORKSHEET

	EBLT	WBLT	NBLT	SBLT
Cycle length, C 87.9 sec				
Adj. LT vol from Vol Adjustment Worksheet, v			20	11
v/c ratio from Capacity Worksheet, X			0.04	0.02
Protected phase effective green interval, g (s)			6.1	6.1
Opposing queue effective green interval, gq			15.88	10.8
Unopposed green interval, gu			40.02	45.0
Red time r=(C-g-gq-gu)			25.9	25.9
Arrival rate, qa=v/(3600(max[X,1.0]))			0.01	0.00
Protected ph. departure rate, Sp=s/3600			0.501	0.50
Permitted ph. departure rate, Ss=s(gq+gu)/(gu*3600)			0.24	0.27
XPerm			0.03	0.01
XProt			0.06	0.03
Case			1	1
Queue at beginning of green arrow, Qa			0.14	0.08
Queue at beginning of unsaturated green, Qu			0.09	0.03
Residual queue, Qr			0.00	0.00
Uniform Delay, d1			5.3	4.5

DELAY/LOS WORKSHEET WITH INITIAL QUEUE

Appr/ Lane Group	Initial Unmet Demand Q veh	Dur. Unmet Demand t hrs.	Uniform Delay Unadj. ds	Uniform Delay Adj. d1 sec	Initial Queue Param. u	Final Unmet Demand Q veh	Initial Queue Delay d3 sec	Lane Group Delay d sec
Eastbound								

Westbound

Northbound

Southbound

Intersection Delay 15.5 sec/veh Intersection LOS B

BACK OF QUEUE WORKSHEET

	Eastbound	Westbound		Northbound		Southbound	
LaneGroup	LTR	L	R	L	TR	L	TR
Init Queue	0.0	0.0	0.0	0.0	0.0	0.0	0.0
Flow Rate	24	63	56	20	416	11	551
So	1900	1900	1900	1900	1900	1900	1900
No.Lanes	0 1 0	1 0	1	1	1 0	1	1 0
SL	1857	1805	1615	1805	1877	1805	1900
LnCapacity	142	148	132	521	1108	631	1122
Flow Ratio	0.01	0.03	0.03	0.01	0.22	0.01	0.29
v/c Ratio	0.17	0.43	0.42	0.04	0.38	0.02	0.49
Grn Ratio	0.08	0.08	0.08	0.71	0.59	0.71	0.59
I Factor	1.000	1.000			1.000		1.000
AT or PVG	3	3	3	3	3	3	3
Pltn Ratio	1.00	1.00	1.00	1.00	1.00	1.00	1.00
PF2	1.00	1.00	1.00	1.00	1.00	1.00	1.00
Q1	0.5	1.5	1.3	0.1	5.3	0.1	7.8
kB	0.3	0.3	0.3	1.3	1.2	1.3	1.2
Q2	0.1	0.2	0.2	0.1	0.7	0.0	1.2
Q Average	0.6	1.7	1.5	0.2	6.1	0.1	8.9
Q Spacing	25.0	25.0	25.0	25.0	25.0	25.0	25.0
Q Storage	0	0	0	0	0	0	0
Q S Ratio							
70th Percentile Output:							
fB%	1.3	1.3	1.3	1.3	1.2	1.3	1.2
BOQ	0.8	2.1	1.9	0.3	7.5	0.1	10.8
QSRatio							
85th Percentile Output:							
fB%	1.7	1.6	1.6	1.7	1.5	1.7	1.5
BOQ	1.0	2.7	2.4	0.3	9.0	0.2	12.9
QSRatio							
90th Percentile Output:							
fB%	1.9	1.9	1.9	2.0	1.6	2.0	1.6
BOQ	1.2	3.1	2.8	0.4	10.0	0.2	14.1
QSRatio							
95th Percentile Output:							
fB%	2.5	2.3	2.3	2.6	1.9	2.6	1.8
BOQ	1.5	3.9	3.5	0.5	11.5	0.3	15.8
QSRatio							
98th Percentile Output:							

fB%	3.0	2.8	2.8	3.1	2.1	3.2	2.0	
BOQ	1.8	4.7	4.2	0.6	13.0	0.3	17.4	
QSRatio								

ERROR MESSAGES

No errors to report.

HCS2000: Signalized Intersections Release 4.1c

Analyst: Scott M.
Agency:
Date: 6/22/05
Period:
Project ID:
E/W St:

Inter.: Anvil Block Rd
Area Type: All other areas
Jurisd:
Year : 2005

N/S St:

SIGNALIZED INTERSECTION SUMMARY

	Eastbound			Westbound			Northbound			Southbound		
	L	T	R	L	T	R	L	T	R	L	T	R
No. Lanes	1	1	0	1	2	0	1	2	1	1	2	1
LGConfig	L	TR		L	TR		L	T	R	L	T	R
Volume	25	100	25	375	375	675	125	775	225	275	375	75
Lane Width	12.0	12.0		12.0	12.0		12.0	12.0	12.0	12.0	12.0	12.0
RTOR Vol			25			50			25			25

Duration 0.25 Area Type: All other areas

Signal Operations

Phase Combination	1	2	3	4	5	6	7	8
EB Left	P	P			NB Left P	P		
Thru		P			Thru	P		
Right		P			Right	P		
Peds					Peds			
WB Left	P	P			SB Left P	P		
Thru		P			Thru	P		
Right		P			Right	P		
Peds					Peds			
NB Right					EB Right			
SB Right					WB Right			
Green	6.3	38.4			12.5	25.9		
Yellow	3.0	3.0			3.0	3.0		
All Red	1.0	1.0			1.0	1.0		

Cycle Length: 99.1 sec

Intersection Performance Summary

Appr/ Lane Grp	Lane Group Capacity	Adj Sat Flow Rate (s)	Ratios v/c	g/C	Lane Group Delay	LOS	Approach Delay	LOS
Eastbound								
L	192	1805	0.15	0.49	19.1	B		
TR	736	1900	0.15	0.39	20.2	C	20.0-	B
Westbound								
L	620	1805	0.67	0.49	26.5	C		
TR	1268	3272	0.88	0.39	36.8	D	34.0	C
Northbound								
L	420	1805	0.33	0.43	20.3	C		
T	943	3610	0.91	0.26	50.1	D	44.1	D
R	422	1615	0.53	0.26	36.0	D		
Southbound								
L	305	1805	1.00	0.43	79.2	E		
T	943	3610	0.44	0.26	32.1	C	50.3	D
R	422	1615	0.13	0.26	28.7	C		

Intersection Delay = 40.3 (sec/veh) Intersection LOS = D

HCS2000: Signalized Intersections Release 4.1c

Gdot
Gdot
#2 Capitol Square

Atlanta, Georgia 30334
Phone: Fax:
E-Mail:

OPERATIONAL ANALYSIS

Analyst: Scott M.
Agency/Co.:
Date Performed: 6/22/05
Analysis Time Period:
Intersection: Anvil Block Rd
Area Type: All other areas
Jurisdiction:
Analysis Year: 2005
Project ID:

East/West Street North/South Street

VOLUME DATA

	Eastbound			Westbound			Northbound			Southbound		
	L	T	R	L	T	R	L	T	R	L	T	R
Volume	25	100	25	375	375	675	125	775	225	275	375	75
% Heavy Veh	0	0	0	0	0	0	0	0	0	0	0	0
PHF	0.90	0.90	0.90	0.90	0.90	0.90	0.90	0.90	0.90	0.90	0.90	0.90
PK 15 Vol	7	28	7	104	104	188	35	215	63	76	104	21
Hi Ln Vol												
% Grade		0			0			0			0	
Ideal Sat	1900	1900		1900	1900		1900	1900	1900	1900	1900	1900
ParkExist												
NumPark												
No. Lanes	1	1	0	1	2	0	1	2	1	1	2	1
LGConfig	L	TR		L	TR		L	T	R	L	T	R
Lane Width	12.0	12.0		12.0	12.0		12.0	12.0	12.0	12.0	12.0	12.0
RTOR Vol			25			50			25			25
Adj Flow	28	111		417	1111		139	861	222	306	417	56
%InSharedLn												
Prop LTs	1.000	0.000		1.000	0.000		1.000	0.000		1.000	0.000	
Prop RTs		0.000			0.625			0.000	1.000		0.000	1.000
Peds Bikes		0			0			0			0	
Buses	0	0		0	0		0	0	0	0	0	0
%InProtPhase	0.0			0.0			0.0			0.0		

Duration 0.25 Area Type: All other areas

OPERATING PARAMETERS

	Eastbound			Westbound			Northbound			Southbound		
	L	T	R	L	T	R	L	T	R	L	T	R
Init Unmet	0.0	0.0		0.0	0.0		0.0	0.0	0.0	0.0	0.0	0.0

Arriv. Type	3	3		3	3		3	3	3		3	3	3			
Unit Ext.	3.0	3.0		3.0	3.0		3.0	3.0	3.0		3.0	3.0	3.0			
I Factor		1.000			1.000			1.000				1.000				
Lost Time	2.0	2.0		2.0	2.0		2.0	2.0	2.0		2.0	2.0	2.0			
Ext of g	2.0	2.0		2.0	2.0		2.0	2.0	2.0		2.0	2.0	2.0			
Ped Min g		3.2			3.2			3.2				3.2				

PHASE DATA

Phase Combination		1	2	3	4			5	6	7	8
EB	Left	P	P			NB	Left	P	P		
	Thru		P				Thru		P		
	Right		P				Right		P		
	Peds						Peds				
WB	Left	P	P			SB	Left	P	P		
	Thru		P				Thru		P		
	Right		P				Right		P		
	Peds						Peds				
NB	Right					EB	Right				
SB	Right					WB	Right				
Green		6.3	38.4					12.5	25.9		
Yellow		3.0	3.0					3.0	3.0		
All Red		1.0	1.0					1.0	1.0		

Cycle Length: 99.1 se

VOLUME ADJUSTMENT AND SATURATION FLOW WORKSHEET

Volume Adjustment

	Eastbound			Westbound			Northbound			Southbound		
	L	T	R	L	T	R	L	T	R	L	T	R
Volume, V	25	100	25	375	375	675	125	775	225	275	375	75
PHF	0.90	0.90	0.90	0.90	0.90	0.90	0.90	0.90	0.90	0.90	0.90	0.90
Adj flow	28	111	0	417	417	694	139	861	222	306	417	56
No. Lanes	1	1	0	1	2	0	1	2	1	1	2	1
Lane group	L	TR		L	TR		L	T	R	L	T	R
Adj flow	28	111		417	1111		139	861	222	306	417	56
Prop LTs	1.000	0.000		1.000	0.000		1.000	0.000		1.000	0.000	
Prop RTs	0.000			0.625			0.000		1.000	0.000		1.000

Saturation Flow Rate (see Exhibit 16-7 to determine the adjustment factors)

	Eastbound			Westbound			Northbound			Southbound		
LG	L	TR		L	TR		L	T	R	L	T	R
So	1900	1900		1900	1900		1900	1900	1900	1900	1900	1900
Lanes	1	1	0	1	2	0	1	2	1	1	2	1
fW	1.000	1.000		1.000	1.000		1.000	1.000	1.000	1.000	1.000	1.00
fHV	1.000	1.000		1.000	1.000		1.000	1.000	1.000	1.000	1.000	1.00
fG	1.000	1.000		1.000	1.000		1.000	1.000	1.000	1.000	1.000	1.00
fP	1.000	1.000		1.000	1.000		1.000	1.000	1.000	1.000	1.000	1.00
fBB	1.000	1.000		1.000	1.000		1.000	1.000	1.000	1.000	1.000	1.00
fA	1.00	1.00		1.00	1.00		1.00	1.00	1.00	1.00	1.00	1.00
fLU	1.00	1.00		1.00	0.95		1.00	0.95	1.00	1.00	0.95	1.00

fRT		1.000		0.906		1.000	0.850		1.000	0.85
fLT	0.950	1.000	0.950	1.000	0.950	1.000		0.950	1.000	
Sec.	0.094		0.621		0.335			0.134		
fLpb	1.000	1.000	1.000	1.000	1.000	1.000		1.000	1.000	
fRpb		1.000		1.000		1.000	1.000		1.000	1.00
S	1805	1900	1805	3272	1805	3610	1615	1805	3610	1615
Sec.	179		1180		637			254		

CAPACITY AND LOS WORKSHEET

Capacity Analysis and Lane Group Capacity

Appr/ Mvmt	Lane Group	Adj Flow Rate (v)	Adj Sat Flow Rate (s)	Flow Ratio (v/s)	Green Ratio (g/C)	--Lane Group-- Capacity (c)	v/c Ratio
Eastbound							
Prot		28	1805	0.02	0.064	115	0.24
Perm		0	179	0.00	0.428	77	0.00
Left	L	28			0.49	192	0.15
Prot							
Perm							
Thru	TR	111	1900	0.06	0.39	736	0.15
Right							
Westbound							
Prot		115	1805	# 0.06	0.064	115	1.00
Perm		302	1180	0.26	0.428	505	0.60
Left	L	417			0.49	620	0.67
Prot							
Perm							
Thru	TR	1111	3272	# 0.34	0.39	1268	0.88
Right							
Northbound							
Prot		139	1805	0.08	0.126	228	0.61
Perm		0	637	0.00	0.302	192	0.00
Left	L	139			0.43	420	0.33
Prot							
Perm							
Thru	T	861	3610	0.24	0.26	943	0.91
Right	R	222	1615	0.14	0.26	422	0.53
Southbound							
Prot		228	1805	# 0.13	0.126	228	1.00
Perm		78	254	# 0.31	0.302	77	1.01
Left	L	306			0.43	305	1.00
Prot							
Perm							
Thru	T	417	3610	0.12	0.26	943	0.44
Right	R	56	1615	0.03	0.26	422	0.13

Sum of flow ratios for critical lane groups, Yc = Sum (v/s) = 0.84
Total lost time per cycle, L = 12.00 sec
Critical flow rate to capacity ratio, Xc = (Yc)(C)/(C-L) = 0.95

Control Delay and LOS Determination

Appr/ Lane Grp	Ratios v/c	g/C	Unf Del d1	Prog Adj Fact	Lane Grp Cap	Incremental Factor k	Del d2	Res Del d3	Lane Group Delay	LOS	Approach Delay	LOS
Eastbound												
L	0.15	0.49	17.5	1.000	192	0.50	1.6	0.0	19.1	B		
TR	0.15	0.39	19.7	1.000	736	0.50	0.4	0.0	20.2	C	20.0-	B

Westbound												
L	0.67	0.49	20.8	1.000	620	0.50	5.7	0.0	26.5	C		
TR	0.88	0.39	28.1	1.000	1268	0.50	8.7	0.0	36.8	D	34.0	C
Northbound												
L	0.33	0.43	18.2	1.000	420	0.50	2.1	0.0	20.3	C		
T	0.91	0.26	35.5	1.000	943	0.50	14.6	0.0	50.1	D	44.1	D
R	0.53	0.26	31.3	1.000	422	0.50	4.6	0.0	36.0	D		
Southbound												
L	1.00	0.43	26.8	1.000	305	0.50	52.4	0.0	79.2	E		
T	0.44	0.26	30.6	1.000	943	0.50	1.5	0.0	32.1	C	50.3	D
R	0.13	0.26	28.0	1.000	422	0.50	0.7	0.0	28.7	C		

Intersection delay = 40.3 (sec/veh) Intersection LOS = D

SUPPLEMENTAL PERMITTED LT WORKSHEET
for exclusive lefts

Input

	EB	WB	NB	SB
Cycle length, C 99.1 sec				
Total actual green time for LT lane group, G (s)	48.7	48.7	42.4	42.
Effective permitted green time for LT lane group, g(s)	42.4	42.4	29.9	29.
Opposing effective green time, go (s)	38.4	38.4	25.9	25.
Number of lanes in LT lane group, N	1	1	1	1
Number of lanes in opposing approach, No	2	1	2	2
Adjusted LT flow rate, VLT (veh/h)	28	417	139	306
Proportion of LT in LT lane group, PLT	1.000	1.000	1.000	1.0
Proportion of LT in opposing flow, PLTo	0.00	0.00	0.00	0.0
Adjusted opposing flow rate, Vo (veh/h)	1111	111	417	861
Lost time for LT lane group, tL	4.00	4.00	4.00	4.0
Computation				
LT volume per cycle, LTC=VLTC/3600	0.77	11.48	3.83	8.4
Opposing lane util. factor, fLUo	0.95	1.00	0.95	0.9
Opposing flow, Volc=VoC/[3600(No)fLUo] (veh/ln/cyc)	16.10	3.06	6.04	12.
gf=G[exp(- a * (LTC ** b))]-tl, gf<=g	0.0	0.0	0.0	0.0
Opposing platoon ratio, Rpo (refer Exhibit 16-11)	1.00	1.00	1.00	1.0
Opposing Queue Ratio, qro=Max[1-Rpo(go/C),0]	0.61	0.61	0.74	0.7
gq, (see Exhibit C16-4,5,6,7,8)	29.21	4.00	10.16	24.
gu=g-gq if gq>=gf, or = g-gf if gq<gf	13.19	38.40	19.74	5.2
n=Max(gq-gf)/2,0)	14.60	2.00	5.08	12.
PTHo=1-PLTo	1.00	1.00	1.00	1.0
PL*=PLT[1+(N-1)g/(gf+gu/EL1+4.24)]	1.00	1.00	1.00	1.0
EL1 (refer to Exhibit C16-3)	3.90	1.46	1.97	3.0
EL2=Max((1-Ptho**n)/Plto, 1.0)				
fmin=2(1+PL)/g or fmin=2(1+Pl)/g	0.09	0.09	0.13	0.1
gdiff=max(gq-gf,0)	0.00	0.00	0.00	0.0
fm=[gf/g]+[gu/g]/[1+PL(EL1-1)], (min=fmin;max=1.00)	0.09	0.62	0.34	0.1
flt=fm=[gf/g]+[gu/g]/[1+PL(EL1-1)]+[gdiff/g]/[1+PL(EL2-1)],(fmin<=fm<=1.00)				
or flt=[fm+0.91(N-1)]/N**				
Left-turn adjustment, fLT	0.094	0.621	0.335	0.1

For special case of single-lane approach opposed by multilane approach, see text.

* If Pl>=1 for shared left-turn lanes with N>1, then assume de-facto left-turn lane and redo calculations.

** For permitted left-turns with multiple exclusive left-turn lanes, flt=fm.
For special case of multilane approach opposed by single-lane approach
or when gf>gq, see text.

SUPPLEMENTAL PERMITTED LT WORKSHEET
for shared lefts

Input

	EB	WB	NB	SB
Cycle length, C 99.1 sec				
Total actual green time for LT lane group, G (s)				
Effective permitted green time for LT lane group, g(s)				
Opposing effective green time, go (s)				
Number of lanes in LT lane group, N				
Number of lanes in opposing approach, No				
Adjusted LT flow rate, VLT (veh/h)				
Proportion of LT in LT lane group, PLT	0.000	0.000	0.000	0.0
Proportion of LT in opposing flow, PLTo				
Adjusted opposing flow rate, Vo (veh/h)				
Lost time for LT lane group, tL				
Computation				
LT volume per cycle, LTC=VLTC/3600				
Opposing lane util. factor, fLUo	0.95	1.00	0.95	0.9
Opposing flow, Volc=VoC/[3600(No)fLUo] (veh/ln/cyc)				
gf=G[exp(- a * (LTC ** b))]-tl, gf<=g				
Opposing platoon ratio, Rpo (refer Exhibit 16-11)				
Opposing Queue Ratio, qro=Max[1-Rpo(go/C),0]				
gq, (see Exhibit C16-4,5,6,7,8)				
gu=g-gq if gq>=gf, or = g-gf if gq<gf				
n=Max(gq-gf)/2,0)				
PTHo=1-PLTo				
PL*=PLT[1+(N-1)g/(gf+gu/EL1+4.24)]				
EL1 (refer to Exhibit C16-3)				
EL2=Max((1-Ptho**n)/Plto, 1.0)				
fmin=2(1+PL)/g or fmin=2(1+Pl)/g				
gdiff=max(gq-gf,0)				
fm=[gf/g]+[gu/g]/[1+PL(EL1-1)], (min=fmin;max=1.00)				
flt=fm=[gf/g]+[gu/g]/[1+PL(EL1-1)]+[gdiff/g]/[1+PL(EL2-1)],(fmin<=fm<=1.00)				
or flt=[fm+0.91(N-1)]/N**				
Left-turn adjustment, fLT				

For special case of single-lane approach opposed by multilane approach,
see text.
* If Pl>=1 for shared left-turn lanes with N>1, then assume de-facto
  left-turn lane and redo calculations.
** For permitted left-turns with multiple exclusive left-turn lanes, flt=fm.
For special case of multilane approach opposed by single-lane approach
or when gf>gq, see text.

SUPPLEMENTAL PEDESTRIAN-BICYCLE EFFECTS WORKSHEET

Permitted Left Turns

	EB	WB	NB	SB
Effective pedestrian green time, gp (s)				
Conflicting pedestrian volume, Vped (p/h)				
Pedestrian flow rate, Vpedg (p/h)				
OCCpedg				
Opposing queue clearing green, gq (s)				
Eff. ped. green consumed by opp. veh. queue, gq/gp				
OCCpedu				

Opposing flow rate, Vo (veh/h)
OCCr
Number of cross-street receiving lanes, Nrec
Number of turning lanes, Nturn
ApbT
Proportion of left turns, PLT
Proportion of left turns using protected phase, PLTA
Left-turn adjustment, fLpb
Permitted Right Turns
Effective pedestrian green time, gp (s)
Conflicting pedestrian volume, Vped (p/h)
Conflicting bicycle volume, Vbic (bicycles/h)
Vpedg
OCCpedg
Effective green, g (s)
Vbicg
OCCbicg
OCCr
Number of cross-street receiving lanes, Nrec
Number of turning lanes, Nturn
ApbT
Proportion right-turns, PRT
Proportion right-turns using protected phase, PRTA
Right turn adjustment, fRpb

SUPPLEMENTAL UNIFORM DELAY WORKSHEET

		EBLT	WBLT	NBLT	SBLT
Cycle length, C	99.1 sec				
Adj. LT vol from Vol Adjustment Worksheet, v		28	417	139	306
v/c ratio from Capacity Worksheet, X		0.15	0.67	0.33	1.00
Protected phase effective green interval, g (s)		6.3	6.3	12.5	12.5
Opposing queue effective green interval, gq		29.21	4.00	10.16	24.6
Unopposed green interval, gu		13.19	38.40	19.74	5.27
Red time r=(C-g-gq-gu)		50.4	50.4	56.7	56.7
Arrival rate, qa=v/(3600(max[X,1.0]))		0.01	0.12	0.04	0.08
Protected ph. departure rate, Sp=s/3600		0.501	0.501	0.501	0.50
Permitted ph. departure rate, Ss=s(gq+gu)/(gu*3600)		0.16	0.36	0.27	0.40
XPerm		0.16	0.35	0.22	1.20
XProt		0.14	2.08	0.43	0.94
Case		1	2	1	3
Queue at beginning of green arrow, Qa		0.39	5.84	2.19	5.23
Queue at beginning of unsaturated green, Qu		0.23	4.75	0.39	2.09
Residual queue, Qr		0.00	3.41	0.00	0.42
Uniform Delay, d1		17.5	20.8	18.2	26.8

DELAY/LOS WORKSHEET WITH INITIAL QUEUE

Appr/ Lane Group	Initial Unmet Demand Q veh	Dur. Unmet Demand t hrs.	Uniform Delay Unadj. ds	Uniform Delay Adj. d1 sec	Initial Queue Param. u	Final Unmet Demand Q veh	Initial Queue Delay d3 sec	Lane Group Delay d sec
Eastbound								

Westbound

Northbound

Southbound

Intersection Delay 40.3 sec/veh Intersection LOS D

BACK OF QUEUE WORKSHEET

	Eastbound			Westbound			Northbound			Southbound		
LaneGroup	L	TR		L	TR		L	T	R	L	T	R
Init Queue	0.0	0.0		0.0	0.0		0.0	0.0	0.0	0.0	0.0	0.0
Flow Rate	28	111		417	584		139	453	222	306	219	56
So	1900	1900		1900	1900		1900	1900	1900	1900	1900	1900
No.Lanes	1	1	0	1	2	0	1	2	1	1	2	1
SL	1805	1900		1805	1722		1805	1900	1615	1805	1900	1615
LnCapacity	192	736		620	667		420	496	422	305	496	422
Flow Ratio	0.02	0.06		0.23	0.34		0.08	0.24	0.14	0.17	0.12	0.03
v/c Ratio	0.15	0.15		0.67	0.88		0.33	0.91	0.53	1.00	0.44	0.13
Grn Ratio	0.49	0.39		0.49	0.39		0.43	0.26	0.26	0.43	0.26	0.26
I Factor		1.000			1.000			1.000			1.000	
AT or PVG	3	3		3	3		3	3	3	3	3	3
Pltn Ratio	1.00	1.00		1.00	1.00		1.00	1.00	1.00	1.00	1.00	1.00
PF2	1.00	1.00		1.00	1.00		1.00	1.00	1.00	1.00	1.00	1.00
Q1	0.4	2.0		6.1	14.9		2.3	12.1	5.2	5.5	5.0	1.2
kB	1.1	1.0		1.1	0.9		1.0	0.7	0.7	1.0	0.7	0.7
Q2	0.2	0.2		2.1	4.5		0.5	4.4	0.7	6.3	0.6	0.1
Q Average	0.6	2.2		8.2	19.4		2.8	16.5	6.0	11.8	5.6	1.3
Q Spacing	25.0	25.0		25.0	25.0		25.0	25.0	25.0	25.0	25.0	25.0
Q Storage	0	0		0	0		0	0	0	0	0	0
Q S Ratio												
70th Percentile Output:												
fB%	1.3	1.3		1.2	1.2		1.3	1.2	1.2	1.2	1.2	1.3
BOQ	0.8	2.7		10.0	23.3		3.5	19.8	7.3	14.3	6.9	1.6
QSRatio												
85th Percentile Output:												
fB%	1.7	1.6		1.5	1.4		1.6	1.4	1.5	1.4	1.5	1.6
BOQ	1.0	3.4		12.0	27.3		4.4	23.2	8.9	16.9	8.4	2.1
QSRatio												
90th Percentile Output:												
fB%	1.9	1.8		1.6	1.5		1.8	1.5	1.7	1.5	1.7	1.9
BOQ	1.1	3.9		13.1	29.3		5.0	25.0	9.8	18.3	9.3	2.4
QSRatio												
95th Percentile Output:												
fB%	2.5	2.2		1.8	1.6		2.2	1.6	1.9	1.7	1.9	2.4
BOQ	1.5	4.9		14.8	31.5		6.0	26.9	11.3	20.0	10.8	3.0
QSRatio												
98th Percentile Output:												

fB%	3.0	2.7	2.0	1.7	2.6	1.8	2.2	1.8	2.2	2.9
BOQ	1.8	5.8	16.4	33.6	7.1	28.9	12.8	21.8	12.3	3.7
QSRatio										

ERROR MESSAGES

No errors to report.

HCS CAPACITY ANALYSIS

FOR PROPOSED CONDITIONS

SUMMARY OF INTERSECTIONS ANALYZED

INTERSECTION	LEVEL OF SERVICE
Lake Harbin Road and SR 42	**C**
Rex Road and SR 42	**D** E in WB Through
Forest Parkway – Ellenwood Road and SR42	**C**
Campbell Road and SR 42	**C**
Anvil Block – Hood Avenue and SR 42	**C**

Discussion: This section of SR 42 lies within a heavily congested urban corridor. Being a corridor made of several closely spaced intersections this facility is better modeled using CORSIM. Also some discussion is needed to determine the best solution for the Rex Road intersection. Preliminary HCS runs suggest adding an additional lane for the west and east bound movements can reduce the delay to a level C. More study is needed however to determine the length of this lane.

HCS2000: Signalized Intersections Release 4.1c

Analyst: Scott M.
Agency:
Date: 6/22/05
Period: am
Project ID:
E/W St:

Inter.: Lake Harbin FUTURE
Area Type: All other areas
Jurisd:
Year : 2032

N/S St:

SIGNALIZED INTERSECTION SUMMARY

	Eastbound			Westbound			Northbound			Southbound		
	L	T	R	L	T	R	L	T	R	L	T	R
No. Lanes	1	0	1	0	0	0	2	2	0	1	2	1
LGConfig	L		R				L	T		L	T	R
Volume	125		575				850	1075		5	600	125
Lane Width	12.0		12.0				12.0	12.0		12.0	12.0	12.0
RTOR Vol			50									100

Duration 0.25 Area Type: All other areas

Signal Operations

Phase Combination	1	2	3	4			5	6	7	8
EB Left	P				NB	Left	P	P		
Thru						Thru		P		
Right	P					Right				
Peds						Peds				
WB Left					SB	Left	P	P		
Thru						Thru		P		
Right						Right		P		
Peds						Peds				
NB Right					EB	Right	P			
SB Right					WB	Right				
Green	17.0						25.0	36.1		
Yellow	3.0						3.0	3.0		
All Red	1.0						1.0	1.0		

Cycle Length: 90.1 sec

Intersection Performance Summary

Appr/ Lane Grp	Lane Group Capacity	Adj Sat Flow Rate (s)	Ratios v/c	g/C	Lane Group Delay	LOS	Approach Delay	LOS
Eastbound								
L	341	1805	0.41	0.19	35.7	D		
							24.6	C
R	825	1615	0.71	0.51	21.9	C		
Westbound								
Northbound								
L	1354	3502	0.70	0.72	12.6	B		
T	1446	3610	0.83	0.40	29.7	C	22.1	C
Southbound								
L	586	1805	0.01	0.72	8.2	A		
T	1446	3610	0.46	0.40	20.9	C	20.6	C
R	647	1615	0.04	0.40	16.6	B		

Intersection Delay = 22.3 (sec/veh) Intersection LOS = C

HCS2000: Signalized Intersections Release 4.1c

Gdot
Gdot
#2 Capitol Square

Atlanta, Georgia 30334
Phone: Fax:
E-Mail:

OPERATIONAL ANALYSIS

Analyst: Scott M.
Agency/Co.:
Date Performed: 6/22/05
Analysis Time Period: am
Intersection: Lake Harbin FUTURE
Area Type: All other areas
Jurisdiction:
Analysis Year: 2032
Project ID:

East/West Street North/South Street

VOLUME DATA

	Eastbound			Westbound			Northbound			Southbound		
	L	T	R	L	T	R	L	T	R	L	T	R
Volume	125		575				850	1075		5	600	125
% Heavy Veh	0		0				0	0		0	0	0
PHF	0.90		0.90				0.90	0.90		0.90	0.90	0.90
PK 15 Vol	35		160				236	299		2	167	35
Hi Ln Vol												
% Grade		0						0			0	
Ideal Sat	1900		1900				1900	1900		1900	1900	1900
ParkExist												
NumPark												
No. Lanes	1	0	1	0	0	0	2	2	0	1	2	1
LGConfig	L		R				L	T		L	T	R
Lane Width	12.0		12.0				12.0	12.0		12.0	12.0	12.0
RTOR Vol			50									100
Adj Flow	139		583				944	1194		6	667	28
%InSharedLn												
Prop LTs							1.000	0.000		1.000	0.000	
Prop RTs			1.000					0.000			0.000	1.000
Peds Bikes	0			0			0			0		
Buses	0		0				0	0		0	0	0
%InProtPhase							0.0			0.0		

Duration 0.25 Area Type: All other areas

OPERATING PARAMETERS

	Eastbound			Westbound			Northbound			Southbound		
	L	T	R	L	T	R	L	T	R	L	T	R
Init Unmet	0.0		0.0				0.0	0.0		0.0	0.0	0.0

Arriv. Type	3	3				3	3		3	3	3	
Unit Ext.	3.0	3.0				3.0	3.0		3.0	3.0	3.0	
I Factor		1.000					1.000			1.000		
Lost Time	2.0	2.0				2.0	2.0		2.0	2.0	2.0	
Ext of g	2.0	2.0				2.0	2.0		2.0	2.0	2.0	
Ped Min g		3.2			3.2		3.2			3.2		

PHASE DATA

Phase Combination	1	2	3	4	5	6	7	8
EB Left	P				NB Left	P	P	
Thru					Thru		P	
Right	P				Right			
Peds					Peds			
WB Left					SB Left	P	P	
Thru					Thru		P	
Right					Right		P	
Peds					Peds			
NB Right					EB Right	P		
SB Right					WB Right			
Green	17.0					25.0	36.1	
Yellow	3.0					3.0	3.0	
All Red	1.0					1.0	1.0	

Cycle Length: 90.1 se

VOLUME ADJUSTMENT AND SATURATION FLOW WORKSHEET

Volume Adjustment

	Eastbound			Westbound			Northbound			Southbound		
	L	T	R	L	T	R	L	T	R	L	T	R
Volume, V	125		575				850	1075		5	600	125
PHF	0.90		0.90				0.90	0.90		0.90	0.90	0.90
Adj flow	139		583				944	1194		6	667	28
No. Lanes	1	0	1	0	0	0	2	2	0	1	2	1
Lane group	L		R				L	T		L	T	R
Adj flow	139		583				944	1194		6	667	28
Prop LTs							1.000	0.000		1.000	0.000	
Prop RTs			1.000					0.000			0.000	1.000

Saturation Flow Rate (see Exhibit 16-7 to determine the adjustment factors)

	Eastbound			Westbound			Northbound			Southbound		
LG	L		R				L	T		L	T	R
So	1900		1900				1900	1900		1900	1900	1900
Lanes	1	0	1	0	0	0	2	2	0	1	2	1
fW	1.000		1.000				1.000	1.000		1.000	1.000	1.00
fHV	1.000		1.000				1.000	1.000		1.000	1.000	1.00
fG	1.000		1.000				1.000	1.000		1.000	1.000	1.00
fP	1.000		1.000				1.000	1.000		1.000	1.000	1.00
fBB	1.000		1.000				1.000	1.000		1.000	1.000	1.00
fA	1.00		1.00				1.00	1.00		1.00	1.00	1.00
fLU	1.00		1.00				0.97	0.95		1.00	0.95	1.00

fRT		0.850			1.000		1.000	0.85	
fLT	0.950			0.950	1.000	0.950	1.000		
Sec.				0.233		0.100			
fLpb	1.000			1.000	1.000	1.000	1.000		
fRpb		1.000			1.000		1.000	1.00	
S	1805	1615		3502	3610	1805	3610	1615	
Sec.				859		190			

CAPACITY AND LOS WORKSHEET

Capacity Analysis and Lane Group Capacity

Appr/ Mvmt	Lane Group	Adj Flow Rate (v)	Adj Sat Flow Rate (s)	Flow Ratio (v/s)	Green Ratio (g/C)	--Lane Group-- Capacity (c)	v/c Ratio
Eastbound							
Prot							
Perm							
Left	L	139	1805	0.08	0.19	341	0.41
Prot							
Perm							
Thru							
Right	R	583	1615	# 0.36	0.51	825	0.71
Westbound							
Prot							
Perm							
Left							
Prot							
Perm							
Thru							
Right							
Northbound							
Prot		944	3502	0.27	0.277	972	0.97
Perm		0	859	0.00	0.445	382	0.00
Left	L	944			0.72	1354	0.70
Prot							
Perm							
Thru	T	1194	3610	# 0.33	0.40	1446	0.83
Right							
Southbound							
Prot		6	1805	0.00	0.277	501	0.01
Perm		0	190	0.00	0.445	85	0.00
Left	L	6			0.72	586	0.01
Prot							
Perm							
Thru	T	667	3610	0.18	0.40	1446	0.46
Right	R	28	1615	0.02	0.40	647	0.04

Sum of flow ratios for critical lane groups, Yc = Sum (v/s) = 0.69
Total lost time per cycle, L = 8.00 sec
Critical flow rate to capacity ratio, Xc = (Yc)(C)/(C-L) = 0.76

Control Delay and LOS Determination

Appr/ Lane Grp	Ratios v/c	g/C	Unf Del d1	Prog Adj Fact	Lane Grp Cap	Incremental Factor k	Del d2	Res Del d3	Lane Group Delay	LOS	Approach Delay	LOS
Eastbound												
L	0.41	0.19	32.1	1.000	341	0.50	3.6	0.0	35.7	D		
											24.6	C

R	0.71	0.51	16.9	1.000	825	0.50	5.1	0.0	21.9	C		
Westbound												
Northbound												
L	0.70	0.72	9.6	1.000	1354	0.50	3.0	0.0	12.6	B		
T	0.83	0.40	24.2	1.000	1446	0.50	5.5	0.0	29.7	C	22.1	C
Southbound												
L	0.01	0.72	8.2	1.000	586	0.50	0.0	0.0	8.2	A		
T	0.46	0.40	19.9	1.000	1446	0.50	1.1	0.0	20.9	C	20.6	C
R	0.04	0.40	16.5	1.000	647	0.50	0.1	0.0	16.6	B		

Intersection delay = 22.3 (sec/veh) Intersection LOS = C

SUPPLEMENTAL PERMITTED LT WORKSHEET
for exclusive lefts

Input

	EB	WB	NB	SB
Cycle length, C 90.1 sec				
Total actual green time for LT lane group, G (s)			65.1	65.
Effective permitted green time for LT lane group, g(s)			40.1	40.
Opposing effective green time, go (s)			36.1	36.
Number of lanes in LT lane group, N			2	1
Number of lanes in opposing approach, No			2	2
Adjusted LT flow rate, VLT (veh/h)			944	6
Proportion of LT in LT lane group, PLT			1.000	1.0
Proportion of LT in opposing flow, PLTo			0.00	0.0
Adjusted opposing flow rate, Vo (veh/h)			667	119
Lost time for LT lane group, tL			4.00	4.0
Computation				
LT volume per cycle, LTC=VLTC/3600			23.63	0.1
Opposing lane util. factor, fLUo			0.95	0.9
Opposing flow, Volc=VoC/[3600(No)fLUo] (veh/ln/cyc)			8.79	15.
gf=G[exp(- a * (LTC ** b))]-tl, gf<=g			0.0	0.0
Opposing platoon ratio, Rpo (refer Exhibit 16-11)			1.00	1.0
Opposing Queue Ratio, qro=Max[1-Rpo(go/C),0]			0.60	0.6
gq, (see Exhibit C16-4,5,6,7,8)			13.08	28.
gu=g-gq if gq>=gf, or = g-gf if gq<gf			27.02	11.
n=Max(gq-gf)/2,0)			6.54	14.
PTHo=1-PLTo			1.00	1.0
PL*=PLT[1+(N-1)g/(gf+gu/EL1+4.24)]			3.67	1.0
EL1 (refer to Exhibit C16-3)			2.51	4.2
EL2=Max((1-Ptho**n)/Plto, 1.0)				
fmin=2(1+PL)/g or fmin=2(1+Pl)/g			0.23	0.1
gdiff=max(gq-gf,0)			0.00	0.0
fm=[gf/g]+[gu/g]/[1+PL(EL1-1)], (min=fmin;max=1.00)			0.23	0.1
flt=fm=[gf/g]+[gu/g]/[1+PL(EL1-1)]+[gdiff/g]/[1+PL(EL2-1)],(fmin<=fm<=1.00)				
or flt=[fm+0.91(N-1)]/N**				
Left-turn adjustment, fLT			0.233	0.1

For special case of single-lane approach opposed by multilane approach, see text.

* If Pl>=1 for shared left-turn lanes with N>1, then assume de-facto left-turn lane and redo calculations.

** For permitted left-turns with multiple exclusive left-turn lanes, flt=fm.
For special case of multilane approach opposed by single-lane approach
or when gf>gq, see text.

SUPPLEMENTAL PERMITTED LT WORKSHEET
for shared lefts

Input

	EB	WB	NB	SB
Cycle length, C 90.1 sec				
Total actual green time for LT lane group, G (s)				
Effective permitted green time for LT lane group, g(s)				
Opposing effective green time, go (s)				
Number of lanes in LT lane group, N				
Number of lanes in opposing approach, No				
Adjusted LT flow rate, VLT (veh/h)				
Proportion of LT in LT lane group, PLT			0.000	0.0
Proportion of LT in opposing flow, PLTo				
Adjusted opposing flow rate, Vo (veh/h)				
Lost time for LT lane group, tL				
Computation				
LT volume per cycle, LTC=VLTC/3600				
Opposing lane util. factor, fLUo			0.95	0.9
Opposing flow, Volc=VoC/[3600(No)fLUo] (veh/ln/cyc)				
gf=G[exp(- a * (LTC ** b))]-tl, gf<=g				
Opposing platoon ratio, Rpo (refer Exhibit 16-11)				
Opposing Queue Ratio, qro=Max[1-Rpo(go/C),0]				
gq, (see Exhibit C16-4,5,6,7,8)				
gu=g-gq if gq>=gf, or = g-gf if gq<gf				
n=Max(gq-gf)/2,0)				
PTHo=1-PLTo				
PL*=PLT[1+(N-1)g/(gf+gu/EL1+4.24)]				
EL1 (refer to Exhibit C16-3)				
EL2=Max((1-Ptho**n)/Plto, 1.0)				
fmin=2(1+PL)/g or fmin=2(1+Pl)/g				
gdiff=max(gq-gf,0)				
fm=[gf/g]+[gu/g]/[1+PL(EL1-1)], (min=fmin;max=1.00)				
flt=fm=[gf/g]+[gu/g]/[1+PL(EL1-1)]+[gdiff/g]/[1+PL(EL2-1)],(fmin<=fm<=1.00)				
or flt=[fm+0.91(N-1)]/N**				
Left-turn adjustment, fLT				

For special case of single-lane approach opposed by multilane approach,
see text.
* If Pl>=1 for shared left-turn lanes with N>1, then assume de-facto
left-turn lane and redo calculations.
** For permitted left-turns with multiple exclusive left-turn lanes, flt=fm.
For special case of multilane approach opposed by single-lane approach
or when gf>gq, see text.

SUPPLEMENTAL PEDESTRIAN-BICYCLE EFFECTS WORKSHEET

Permitted Left Turns

	EB	WB	NB	SB
Effective pedestrian green time, gp (s)				
Conflicting pedestrian volume, Vped (p/h)				
Pedestrian flow rate, Vpedg (p/h)				
OCCpedg				
Opposing queue clearing green, gq (s)				
Eff. ped. green consumed by opp. veh. queue, gq/gp				
OCCpedu				

Opposing flow rate, Vo (veh/h)
OCCr
Number of cross-street receiving lanes, Nrec
Number of turning lanes, Nturn
ApbT
Proportion of left turns, PLT
Proportion of left turns using protected phase, PLTA
Left-turn adjustment, fLpb
Permitted Right Turns
Effective pedestrian green time, gp (s)
Conflicting pedestrian volume, Vped (p/h)
Conflicting bicycle volume, Vbic (bicycles/h)
Vpedg
OCCpedg
Effective green, g (s)
Vbicg
OCCbicg
OCCr
Number of cross-street receiving lanes, Nrec
Number of turning lanes, Nturn
ApbT
Proportion right-turns, PRT
Proportion right-turns using protected phase, PRTA
Right turn adjustment, fRpb

SUPPLEMENTAL UNIFORM DELAY WORKSHEET

	EBLT	WBLT	NBLT	SBLT
Cycle length, C 90.1 sec				
Adj. LT vol from Vol Adjustment Worksheet, v			944	6
v/c ratio from Capacity Worksheet, X			0.70	0.01
Protected phase effective green interval, g (s)			25.0	25.0
Opposing queue effective green interval, gq			13.08	28.9
Unopposed green interval, gu			27.02	11.1
Red time r=(C-g-gq-gu)			25.0	25.0
Arrival rate, qa=v/(3600(max[X,1.0]))			0.26	0.00
Protected ph. departure rate, Sp=s/3600			0.973	0.50
Permitted ph. departure rate, Ss=s(gq+gu)/(gu*3600)			0.35	0.19
XPerm			1.10	0.03
XProt			0.54	0.01
Case			3	1
Queue at beginning of green arrow, Qa			7.50	0.04
Queue at beginning of unsaturated green, Qu			3.43	0.05
Residual queue, Qr			0.95	0.00
Uniform Delay, d1			9.6	8.2

DELAY/LOS WORKSHEET WITH INITIAL QUEUE

Appr/ Lane Group	Initial Unmet Demand Q veh	Dur. Unmet Demand t hrs.	Uniform Delay Unadj. ds	Uniform Delay Adj. d1 sec	Initial Queue Param. u	Final Unmet Demand Q veh	Initial Queue Delay d3 sec	Lane Group Delay d sec
Eastbound								

Westbound

Northbound

Southbound

Intersection Delay 22.3 sec/veh Intersection LOS C

BACK OF QUEUE WORKSHEET

	Eastbound			Westbound			Northbound			Southbound		
LaneGroup	L		R				L	T		L	T	R
Init Queue	0.0		0.0				0.0	0.0		0.0	0.0	0.0
Flow Rate	139		583				486	628		6	351	28
So	1900		1900				1900	1900		1900	1900	1900
No.Lanes	1	0	1	0	0	0	2	2	0	1	2	1
SL	1805		1615				1805	1900		1805	1900	1615
LnCapacity	341		825				697	761		586	761	647
Flow Ratio	0.08		0.36				0.27	0.33		0.00	0.18	0.02
v/c Ratio	0.41		0.71				0.70	0.83		0.01	0.46	0.04
Grn Ratio	0.19		0.51				0.72	0.40		0.72	0.40	0.40
I Factor		1.000						1.000			1.000	
AT or PVG	3		3				3	3		3	3	3
Pltn Ratio	1.00		1.00				1.00	1.00		1.00	1.00	1.00
PF2	1.00		1.00				1.00	1.00		1.00	1.00	1.00
Q1	3.1		11.2				4.2	14.1		0.0	6.5	0.4
kB	0.5		1.0				1.4	0.9		1.4	0.9	0.8
Q2	0.4		2.2				2.9	3.7		0.0	0.8	0.0
Q Average	3.4		13.4				7.0	17.7		0.1	7.3	0.5
Q Spacing	25.0		25.0				25.0	25.0		25.0	25.0	25.0
Q Storage	0		0				0	0		0	0	0
Q S Ratio												
70th Percentile Output:												
fB%	1.3		1.2				1.2	1.2		1.3	1.2	1.3
BOQ	4.3		16.2				8.6	21.3		0.1	8.9	0.6
QSRatio												
85th Percentile Output:												
fB%	1.6		1.4				1.5	1.4		1.7	1.5	1.7
BOQ	5.3		19.1				10.4	25.0		0.1	10.7	0.8
QSRatio												
90th Percentile Output:												
fB%	1.8		1.5				1.6	1.5		2.0	1.6	2.0
BOQ	6.0		20.6				11.4	26.9		0.1	11.7	0.9
QSRatio												
95th Percentile Output:												
fB%	2.1		1.7				1.8	1.6		2.6	1.8	2.5
BOQ	7.2		22.4				13.0	28.9		0.1	13.3	1.2
QSRatio												
98th Percentile Output:												

fB%	2.5	1.8		2.1	1.7	3.2	2.1	3.1
BOQ	8.4	24.2		14.6	30.9	0.2	14.9	1.4
QSRatio								

ERROR MESSAGES

No errors to report.

HCS2000: Signalized Intersections Release 4.1c

Analyst: Scott M.
Agency:
Date: 6/24/05
Period: am
Project ID:
E/W St:

Inter.: Rex Rd
Area Type: All other areas
Jurisd:
Year : 2032

N/S St:

SIGNALIZED INTERSECTION SUMMARY

	Eastbound			Westbound			Northbound			Southbound		
	L	T	R	L	T	R	L	T	R	L	T	R
No. Lanes	2	1	1	1	1	1	2	2	1	1	2	1
LGConfig	L	T	R	L	T	R	L	T	R	L	T	R
Volume	300	375	200	75	800	225	475	690	50	175	335	200
Lane Width	12.0	12.0	12.0	12.0	12.0	12.0	12.0	12.0	12.0	12.0	12.0	12.0
RTOR Vol			50			50			50			50

Duration 0.25 Area Type: All other areas

Signal Operations

Phase Combination	1	2	3	4			5	6	7	8
EB Left	P				NB	Left	P			
Thru	P					Thru		P		
Right	P					Right		P		
Peds						Peds				
WB Left	P				SB	Left	P			
Thru	P					Thru		P		
Right	P					Right		P		
Peds						Peds				
NB Right	P				EB	Right				
SB Right	P				WB	Right				
Green	40.0						15.0	20.0		
Yellow	3.0						3.0	3.0		
All Red	1.0						1.0	1.0		

Cycle Length: 87.0 sec

Intersection Performance Summary

Appr/ Lane Grp	Lane Group Capacity	Adj Sat Flow Rate (s)	Ratios v/c	g/C	Lane Group Delay	LOS	Approach Delay	LOS
Eastbound								
L	777	1690	0.43	0.46	17.5	B		
T	874	1900	0.48	0.46	18.1	B	17.3	B
R	743	1615	0.22	0.46	14.9	B		
Westbound								
L	337	734	0.25	0.46	16.1	B		
T	874	1900	1.02	0.46	58.3	E	48.1	D
R	743	1615	0.26	0.46	15.3	B		
Northbound								
L	604	3502	0.87	0.17	51.2	D		
T	830	3610	0.92	0.23	50.2	D	50.6	D
R	1188	1615	0.00	0.74	3.0	A		
Southbound								
L	311	1805	0.62	0.17	42.5	D		
T	830	3610	0.45	0.23	30.5	C	27.6	C
R	1188	1615	0.14	0.74	3.6	A		

Intersection Delay = 38.4 (sec/veh) Intersection LOS = D

HCS2000: Signalized Intersections Release 4.1c

Gdot
Gdot
#2 Capitol Square

Atlanta, Georgia 30334
Phone: Fax:
E-Mail:

OPERATIONAL ANALYSIS

Analyst:	Scott M.
Agency/Co.:	
Date Performed:	6/24/05
Analysis Time Period:	am
Intersection:	Rex Rd
Area Type:	All other areas
Jurisdiction:	
Analysis Year:	2032
Project ID:	

East/West Street North/South Street

VOLUME DATA

	Eastbound			Westbound			Northbound			Southbound		
	L	T	R	L	T	R	L	T	R	L	T	R
Volume	300	375	200	75	800	225	475	690	50	175	335	200
% Heavy Veh	0	0	0	0	0	0	0	0	0	0	0	0
PHF	0.90	0.90	0.90	0.90	0.90	0.90	0.90	0.90	0.90	0.90	0.90	0.90
PK 15 Vol	83	104	56	21	222	63	132	192	14	49	93	56
Hi Ln Vol												
% Grade		0			0			0			0	
Ideal Sat	1900	1900	1900	1900	1900	1900	1900	1900	1900	1900	1900	1900
ParkExist												
NumPark												
No. Lanes	2	1	1	1	1	1	2	2	1	1	2	1
LGConfig	L	T	R	L	T	R	L	T	R	L	T	R
Lane Width	12.0	12.0	12.0	12.0	12.0	12.0	12.0	12.0	12.0	12.0	12.0	12.0
RTOR Vol			50			50			50			50
Adj Flow	333	417	167	83	889	194	528	767	0	194	372	167
%InSharedLn												
Prop LTs	1.000	0.000		1.000	0.000			0.000			0.000	
Prop RTs		0.000	1.000		0.000	1.000		0.000	1.000		0.000	1.000
Peds Bikes		0			0			0			0	
Buses	0	0	0	0	0	0	0	0	0	0	0	0
%InProtPhase												

Duration 0.25 Area Type: All other areas

OPERATING PARAMETERS

	Eastbound			Westbound			Northbound			Southbound		
	L	T	R	L	T	R	L	T	R	L	T	R
Init Unmet	0.0	0.0	0.0	0.0	0.0	0.0	0.0	0.0	0.0	0.0	0.0	0.0

Arriv. Type	3	3	3	3	3	3	3	3	3	3	3	3
Unit Ext.	3.0	3.0	3.0	3.0	3.0	3.0	3.0	3.0	3.0	3.0	3.0	3.0
I Factor		1.000			1.000			1.000			1.000	
Lost Time	2.0	2.0	2.0	2.0	2.0	2.0	2.0	2.0	2.0	2.0	2.0	2.0
Ext of g	2.0	2.0	2.0	2.0	2.0	2.0	2.0	2.0	2.0	2.0	2.0	2.0
Ped Min g		3.2			3.2			3.2			3.2	

PHASE DATA

Phase Combination	1	2	3	4	5	6	7	8
EB Left	P				NB Left	P		
Thru	P				Thru		P	
Right	P				Right		P	
Peds					Peds			
WB Left	P				SB Left	P		
Thru	P				Thru		P	
Right	P				Right		P	
Peds					Peds			
NB Right	P				EB Right			
SB Right	P				WB Right			
Green	40.0				15.0	20.0		
Yellow	3.0				3.0	3.0		
All Red	1.0				1.0	1.0		

Cycle Length: 87.0 se

VOLUME ADJUSTMENT AND SATURATION FLOW WORKSHEET

Volume Adjustment

	Eastbound			Westbound			Northbound			Southbound		
	L	T	R	L	T	R	L	T	R	L	T	R
Volume, V	300	375	200	75	800	225	475	690	50	175	335	200
PHF	0.90	0.90	0.90	0.90	0.90	0.90	0.90	0.90	0.90	0.90	0.90	0.90
Adj flow	333	417	167	83	889	194	528	767	0	194	372	167
No. Lanes	2	1	1	1	1	1	2	2	1	1	2	1
Lane group	L	T	R	L	T	R	L	T	R	L	T	R
Adj flow	333	417	167	83	889	194	528	767	0	194	372	167
Prop LTs	1.000	0.000		1.000	0.000			0.000			0.000	
Prop RTs		0.000	1.000		0.000	1.000		0.000	1.000		0.000	1.000

Saturation Flow Rate (see Exhibit 16-7 to determine the adjustment factors)

	Eastbound			Westbound			Northbound			Southbound		
LG	L	T	R	L	T	R	L	T	R	L	T	R
So	1900	1900	1900	1900	1900	1900	1900	1900	1900	1900	1900	1900
Lanes	2	1	1	1	1	1	2	2	1	1	2	1
fW	1.000	1.000	1.000	1.000	1.000	1.000	1.000	1.000	1.000	1.000	1.000	1.00
fHV	1.000	1.000	1.000	1.000	1.000	1.000	1.000	1.000	1.000	1.000	1.000	1.00
fG	1.000	1.000	1.000	1.000	1.000	1.000	1.000	1.000	1.000	1.000	1.000	1.00
fP	1.000	1.000	1.000	1.000	1.000	1.000	1.000	1.000	1.000	1.000	1.000	1.00
fBB	1.000	1.000	1.000	1.000	1.000	1.000	1.000	1.000	1.000	1.000	1.000	1.00
fA	1.00	1.00	1.00	1.00	1.00	1.00	1.00	1.00	1.00	1.00	1.00	1.00
fLU	0.97	1.00	1.00	1.00	1.00	1.00	0.97	0.95	1.00	1.00	0.95	1.00

fRT		1.000	0.850		1.000	0.850		1.000	0.850		1.000	0.85
fLT	0.459	1.000		0.387	1.000		0.950	1.000		0.950	1.000	
Sec.												
fLpb	1.000	1.000		1.000	1.000		1.000	1.000		1.000	1.000	
fRpb		1.000	1.000		1.000	1.000		1.000	1.000		1.000	1.00
S	1690	1900	1615	734	1900	1615	3502	3610	1615	1805	3610	1615
Sec.												

CAPACITY AND LOS WORKSHEET

Capacity Analysis and Lane Group Capacity

Appr/ Mvmt	Lane Group	Adj Flow Rate (v)	Adj Sat Flow Rate (s)	Flow Ratio (v/s)	Green Ratio (g/C)	--Lane Group-- Capacity (c)	v/c Ratio
Eastbound							
Prot							
Perm							
Left	L	333	1690	0.20	0.46	777	0.43
Prot							
Perm							
Thru	T	417	1900	0.22	0.46	874	0.48
Right	R	167	1615	0.10	0.46	743	0.22
Westbound							
Prot							
Perm							
Left	L	83	734	0.11	0.46	337	0.25
Prot							
Perm							
Thru	T	889	1900	# 0.47	0.46	874	1.02
Right	R	194	1615	0.12	0.46	743	0.26
Northbound							
Prot							
Perm							
Left	L	528	3502	# 0.15	0.17	604	0.87
Prot							
Perm							
Thru	T	767	3610	# 0.21	0.23	830	0.92
Right	R	0	1615	0.00	0.74	1188	0.00
Southbound							
Prot							
Perm							
Left	L	194	1805	0.11	0.17	311	0.62
Prot							
Perm							
Thru	T	372	3610	0.10	0.23	830	0.45
Right	R	167	1615	0.10	0.74	1188	0.14

Sum of flow ratios for critical lane groups, Yc = Sum (v/s) = 0.83
Total lost time per cycle, L = 12.00 sec
Critical flow rate to capacity ratio, Xc = (Yc)(C)/(C-L) = 0.96

Control Delay and LOS Determination

Appr/ Lane Grp	Ratios v/c	g/C	Unf Del d1	Prog Adj Fact	Lane Grp Cap	Incremental Factor k	Del d2	Res Del d3	Lane Group Delay	LOS	Approach Delay	LOS
Eastbound												
L	0.43	0.46	15.8	1.000	777	0.50	1.7	0.0	17.5	B		
T	0.48	0.46	16.3	1.000	874	0.50	1.9	0.0	18.1	B	17.3	B

R	0.22	0.46	14.2	1.000	743	0.50	0.7	0.0	14.9	B		
Westbound												
L	0.25	0.46	14.3	1.000	337	0.50	1.7	0.0	16.1	B		
T	1.02	0.46	23.5	1.000	874	0.50	34.8	0.0	58.3	E	48.1	D
R	0.26	0.46	14.4	1.000	743	0.50	0.9	0.0	15.3	B		
Northbound												
L	0.87	0.17	35.1	1.000	604	0.50	16.1	0.0	51.2	D		
T	0.92	0.23	32.8	1.000	830	0.50	17.5	0.0	50.2	D	50.6	D
R	0.00	0.74	3.0	1.000	1188	0.50	0.0	0.0	3.0	A		
Southbound												
L	0.62	0.17	33.4	1.000	311	0.50	9.1	0.0	42.5	D		
T	0.45	0.23	28.8	1.000	830	0.50	1.7	0.0	30.5	C	27.6	C
R	0.14	0.74	3.4	1.000	1188	0.50	0.2	0.0	3.6	A		

Intersection delay = 38.4 (sec/veh) Intersection LOS = D

SUPPLEMENTAL PERMITTED LT WORKSHEET
for exclusive lefts

Input

	EB	WB	NB	SB
Cycle length, C 87.0 sec				
Total actual green time for LT lane group, G (s)	40.0	40.0		
Effective permitted green time for LT lane group, g(s)	40.0	40.0		
Opposing effective green time, go (s)	40.0	40.0		
Number of lanes in LT lane group, N	2	1		
Number of lanes in opposing approach, No	1	1		
Adjusted LT flow rate, VLT (veh/h)	333	83		
Proportion of LT in LT lane group, PLT	1.000	1.000		
Proportion of LT in opposing flow, PLTo	0.00	0.00		
Adjusted opposing flow rate, Vo (veh/h)	889	417		
Lost time for LT lane group, tL	4.00	4.00		
Computation				
LT volume per cycle, LTC=VLTC/3600	8.05	2.01		
Opposing lane util. factor, fLUo	1.00	1.00	0.95	0.9
Opposing flow, Volc=VoC/[3600(No)fLUo] (veh/ln/cyc)	21.48	10.08		
gf=G[exp(- a * (LTC ** b))]-tl, gf<=g	0.0	0.0		
Opposing platoon ratio, Rpo (refer Exhibit 16-11)	1.00	1.00		
Opposing Queue Ratio, qro=Max[1-Rpo(go/C),0]	0.54	0.54		
gq, (see Exhibit C16-4,5,6,7,8)	36.00	10.17		
gu=g-gq if gq>=gf, or = g-gf if gq<gf	4.00	29.83		
n=Max(gq-gf)/2,0)	18.00	5.09		
PTHo=1-PLTo	1.00	1.00		
PL*=PLT[1+(N-1)g/(gf+gu/EL1+4.24)]	8.17	1.00		
EL1 (refer to Exhibit C16-3)	2.99	1.93		
EL2=Max((1-Ptho**n)/Plto, 1.0)				
fmin=2(1+PL)/g or fmin=2(1+Pl)/g	0.46	0.10		
gdiff=max(gq-gf,0)	0.00	0.00		
fm=[gf/g]+[gu/g]/[1+PL(EL1-1)], (min=fmin;max=1.00)	0.46	0.39		
flt=fm=[gf/g]+[gu/g]/[1+PL(EL1-1)]+[gdiff/g]/[1+PL(EL2-1)],(fmin<=fm<=1.00)				
or flt=[fm+0.91(N-1)]/N**				
Left-turn adjustment, fLT	0.459	0.387		

For special case of single-lane approach opposed by multilane approach, see text.

* If Pl>=1 for shared left-turn lanes with N>1, then assume de-facto left-turn lane and redo calculations.

** For permitted left-turns with multiple exclusive left-turn lanes, flt=fm.
For special case of multilane approach opposed by single-lane approach
or when gf>gq, see text.

SUPPLEMENTAL PERMITTED LT WORKSHEET
for shared lefts

Input

	EB	WB	NB	SB
Cycle length, C 87.0 sec				
Total actual green time for LT lane group, G (s)				
Effective permitted green time for LT lane group, g(s)				
Opposing effective green time, go (s)				
Number of lanes in LT lane group, N				
Number of lanes in opposing approach, No				
Adjusted LT flow rate, VLT (veh/h)				
Proportion of LT in LT lane group, PLT	0.000	0.000	0.000	0.0
Proportion of LT in opposing flow, PLTo				
Adjusted opposing flow rate, Vo (veh/h)				
Lost time for LT lane group, tL				
Computation				
LT volume per cycle, LTC=VLTC/3600				
Opposing lane util. factor, fLUo	1.00	1.00	0.95	0.9
Opposing flow, Volc=VoC/[3600(No)fLUo] (veh/ln/cyc)				
gf=G[exp(- a * (LTC ** b))]-tl, gf<=g				
Opposing platoon ratio, Rpo (refer Exhibit 16-11)				
Opposing Queue Ratio, qro=Max[1-Rpo(go/C),0]				
gq, (see Exhibit C16-4,5,6,7,8)				
gu=g-gq if gq>=gf, or = g-gf if gq<gf				
n=Max(gq-gf)/2,0)				
PTHo=1-PLTo				
PL*=PLT[1+(N-1)g/(gf+gu/EL1+4.24)]				
EL1 (refer to Exhibit C16-3)				
EL2=Max((1-Ptho**n)/Plto, 1.0)				
fmin=2(1+PL)/g or fmin=2(1+Pl)/g				
gdiff=max(gq-gf,0)				
fm=[gf/g]+[gu/g]/[1+PL(EL1-1)], (min=fmin;max=1.00)				
flt=fm=[gf/g]+[gu/g]/[1+PL(EL1-1)]+[gdiff/g]/[1+PL(EL2-1)],(fmin<=fm<=1.00)				
or flt=[fm+0.91(N-1)]/N**				
Left-turn adjustment, fLT				

For special case of single-lane approach opposed by multilane approach,
see text.
* If Pl>=1 for shared left-turn lanes with N>1, then assume de-facto
  left-turn lane and redo calculations.
** For permitted left-turns with multiple exclusive left-turn lanes, flt=fm.
For special case of multilane approach opposed by single-lane approach
or when gf>gq, see text.

SUPPLEMENTAL PEDESTRIAN-BICYCLE EFFECTS WORKSHEET

Permitted Left Turns

	EB	WB	NB	SB
Effective pedestrian green time, gp (s)				
Conflicting pedestrian volume, Vped (p/h)				
Pedestrian flow rate, Vpedg (p/h)				
OCCpedg				
Opposing queue clearing green, gq (s)				
Eff. ped. green consumed by opp. veh. queue, gq/gp				
OCCpedu				

Opposing flow rate, Vo (veh/h)
OCCr
Number of cross-street receiving lanes, Nrec
Number of turning lanes, Nturn
ApbT
Proportion of left turns, PLT
Proportion of left turns using protected phase, PLTA
Left-turn adjustment, fLpb
Permitted Right Turns
Effective pedestrian green time, gp (s)
Conflicting pedestrian volume, Vped (p/h)
Conflicting bicycle volume, Vbic (bicycles/h)
Vpedg
OCCpedg
Effective green, g (s)
Vbicg
OCCbicg
OCCr
Number of cross-street receiving lanes, Nrec
Number of turning lanes, Nturn
ApbT
Proportion right-turns, PRT
Proportion right-turns using protected phase, PRTA
Right turn adjustment, fRpb

SUPPLEMENTAL UNIFORM DELAY WORKSHEET

	EBLT	WBLT	NBLT	SBLT
Cycle length, C	87.0 sec			
Adj. LT vol from Vol Adjustment Worksheet, v				
v/c ratio from Capacity Worksheet, X				
Protected phase effective green interval, g (s)				
Opposing queue effective green interval, gq				
Unopposed green interval, gu				
Red time r=(C-g-gq-gu)				
Arrival rate, qa=v/(3600(max[X,1.0]))				
Protected ph. departure rate, Sp=s/3600				
Permitted ph. departure rate, Ss=s(gq+gu)/(gu*3600)				
XPerm				
XProt				
Case				
Queue at beginning of green arrow, Qa				
Queue at beginning of unsaturated green, Qu				
Residual queue, Qr				
Uniform Delay, d1				

DELAY/LOS WORKSHEET WITH INITIAL QUEUE

Appr/ Lane Group	Initial Unmet Demand Q veh	Dur. Unmet Demand t hrs.	Uniform Delay Unadj. ds	Uniform Delay Adj. d1 sec	Initial Queue Param. u	Final Unmet Demand Q veh	Initial Queue Delay d3 sec	Lane Group Delay d sec
Eastbound								

Westbound

Northbound

Southbound

Intersection Delay 38.4 sec/veh Intersection LOS D

BACK OF QUEUE WORKSHEET

	Eastbound			Westbound			Northbound			Southbound		
LaneGroup	L	T	R	L	T	R	L	T	R	L	T	R
Init Queue	0.0	0.0	0.0	0.0	0.0	0.0	0.0	0.0	0.0	0.0	0.0	0.0
Flow Rate	171	417	167	83	889	194	272	403	0	194	195	167
So	1900	1900	1900	1900	1900	1900	1900	1900	1900	1900	1900	1900
No.Lanes	2	1	1	1	1	1	2	2	1	1	2	1
SL	871	1900	1615	734	1900	1615	1805	1900	1615	1805	1900	1615
LnCapacity	400	874	743	337	874	743	311	436	1188	311	436	1188
Flow Ratio	0.20	0.22	0.10	0.11	0.47	0.12	0.15	0.21	0.00	0.11	0.10	0.10
v/c Ratio	0.43	0.48	0.22	0.25	1.02	0.26	0.87	0.92	0.00	0.62	0.45	0.14
Grn Ratio	0.46	0.46	0.46	0.46	0.46	0.46	0.17	0.23	0.74	0.17	0.23	0.74
I Factor		1.000			1.000			1.000			1.000	
AT or PVG	3	3	3	3	3	3	3	3	3	3	3	3
Pltn Ratio	1.00	1.00	1.00	1.00	1.00	1.00	1.00	1.00	1.00	1.00	1.00	1.00
PF2	1.00	1.00	1.00	1.00	1.00	1.00	1.00	1.00	1.00	1.00	1.00	1.00
Q1	2.8	7.0	2.4	1.2	21.5	2.9	6.4	9.5	0.0	4.3	4.0	1.2
kB	0.6	1.0	0.9	0.5	1.0	0.9	0.5	0.6	1.3	0.5	0.6	1.3
Q2	0.4	0.9	0.3	0.2	11.5	0.3	2.4	4.0	0.0	0.8	0.5	0.2
Q Average	3.2	7.9	2.7	1.4	32.9	3.2	8.8	13.5	0.0	5.1	4.6	1.4
Q Spacing	25.0	25.0	25.0	25.0	25.0	25.0	25.0	25.0	25.0	25.0	25.0	25.0
Q Storage	0	0	0	0	0	0	0	0	0	0	0	0
Q S Ratio												
70th Percentile Output:												
fB%	1.3	1.2	1.3	1.3	1.2	1.3	1.2	1.2	1.3	1.2	1.2	1.3
BOQ	4.0	9.6	3.4	1.8	39.5	4.0	10.7	16.3	0.0	6.4	5.6	1.8
QSRatio												
85th Percentile Output:												
fB%	1.6	1.5	1.6	1.6	1.4	1.6	1.5	1.4	1.7	1.5	1.5	1.6
BOQ	5.0	11.5	4.2	2.3	46.1	5.0	12.7	19.2	0.0	7.7	6.9	2.3
QSRatio												
90th Percentile Output:												
fB%	1.8	1.6	1.8	1.9	1.5	1.8	1.6	1.5	2.0	1.7	1.7	1.9
BOQ	5.7	12.6	4.8	2.6	49.4	5.6	13.9	20.7	0.0	8.6	7.7	2.6
QSRatio												
95th Percentile Output:												
fB%	2.1	1.8	2.2	2.4	1.6	2.1	1.8	1.7	2.6	2.0	2.0	2.4
BOQ	6.8	14.2	5.9	3.3	52.8	6.8	15.6	22.5	0.0	10.1	9.1	3.3
QSRatio												
98th Percentile Output:												

fB%	2.5	2.0	2.6	2.8	1.7	2.5	2.0	1.8	3.2	2.2	2.3	2.8
BOQ	8.0	15.8	6.9	3.9	56.1	7.9	17.2	24.3	0.0	11.5	10.5	4.0
QSRatio												

ERROR MESSAGES

No errors to report.

HCS2000: Signalized Intersections Release 4.1c

Analyst: Scott M.
Agency:
Date: 6/24/05
Period: am
Project ID:
E/W St:

Inter.: Rex Rd
Area Type: All other areas
Jurisd:
Year : 2032

N/S St:

SIGNALIZED INTERSECTION SUMMARY

	Eastbound			Westbound			Northbound			Southbound		
	L	T	R	L	T	R	L	T	R	L	T	R
No. Lanes	2	1	1	1	2	1	2	2	1	2	2	1
LGConfig	L	T	R	L	T	R	L	T	R	L	T	R
Volume	300	375	200	75	800	225	475	690	50	175	335	200
Lane Width	12.0	12.0	12.0	12.0	12.0	12.0	12.0	12.0	12.0	12.0	12.0	12.0
RTOR Vol			50			50			50			50

Duration 0.25 Area Type: All other areas

Signal Operations

Phase Combination		1	2	3	4			5	6	7	8
EB	Left	P	P			NB	Left	P	P		
	Thru		P				Thru		P		
	Right		P				Right		P		
	Peds						Peds				
WB	Left	P	P			SB	Left	P	P		
	Thru		P				Thru		P		
	Right		P				Right		P		
	Peds						Peds				
NB	Right	P				EB	Right				
SB	Right	P				WB	Right				
Green		4.0	26.0					18.0	24.0		
Yellow		3.0	3.0					3.0	3.0		
All Red		1.0	1.0					1.0	1.0		

Cycle Length: 88.0 sec

Intersection Performance Summary

Appr/ Lane Grp	Lane Group Capacity	Adj Sat Flow Rate (s)	Ratios v/c	g/C	Lane Group Delay	LOS	Approach Delay	LOS
Eastbound								
L	692	3502	0.48	0.39	24.0	C		
T	561	1900	0.74	0.30	36.6	D	30.2	C
R	477	1615	0.35	0.30	26.4	C		
Westbound								
L	208	1805	0.40	0.39	25.2	C		
T	1067	3610	0.83	0.30	36.6	D	34.3	C
R	477	1615	0.41	0.30	27.4	C		
Northbound								
L	1041	3502	0.51	0.52	14.1	B		
T	985	3610	0.78	0.27	35.6	D	26.8	C
R	587	1615	0.00	0.36	17.8	B		
Southbound								
L	1189	3502	0.16	0.52	12.9	B		
T	985	3610	0.38	0.27	27.0	C	22.0	C
R	587	1615	0.28	0.36	21.1	C		

Intersection Delay = 28.8 (sec/veh) Intersection LOS = C

HCS2000: Signalized Intersections Release 4.1c

Gdot
Gdot
#2 Capitol Square

Atlanta, Georgia 30334
Phone: Fax:
E-Mail:

OPERATIONAL ANALYSIS

Analyst:	Scott M.
Agency/Co.:	
Date Performed:	6/24/05
Analysis Time Period:	am
Intersection:	Rex Rd
Area Type:	All other areas
Jurisdiction:	
Analysis Year:	2032
Project ID:	

East/West Street North/South Street

VOLUME DATA

	Eastbound			Westbound			Northbound			Southbound		
	L	T	R	L	T	R	L	T	R	L	T	R
Volume	300	375	200	75	800	225	475	690	50	175	335	200
% Heavy Veh	0	0	0	0	0	0	0	0	0	0	0	0
PHF	0.90	0.90	0.90	0.90	0.90	0.90	0.90	0.90	0.90	0.90	0.90	0.90
PK 15 Vol	83	104	56	21	222	63	132	192	14	49	93	56
Hi Ln Vol												
% Grade		0			0			0			0	
Ideal Sat	1900	1900	1900	1900	1900	1900	1900	1900	1900	1900	1900	1900
ParkExist												
NumPark												
No. Lanes	2	1	1	1	2	1	2	2	1	2	2	1
LGConfig	L	T	R	L	T	R	L	T	R	L	T	R
Lane Width	12.0	12.0	12.0	12.0	12.0	12.0	12.0	12.0	12.0	12.0	12.0	12.0
RTOR Vol			50			50			50			50
Adj Flow	333	417	167	83	889	194	528	767	0	194	372	167
%InSharedLn												
Prop LTs	1.000	0.000		1.000	0.000		1.000	0.000		1.000	0.000	
Prop RTs		0.000	1.000		0.000	1.000		0.000	1.000		0.000	1.000
Peds Bikes	0			0			0			0		
Buses	0	0	0	0	0	0	0	0	0	0	0	0
%InProtPhase	0.0			0.0			0.0			0.0		

Duration 0.25 Area Type: All other areas

OPERATING PARAMETERS

	Eastbound			Westbound			Northbound			Southbound		
	L	T	R	L	T	R	L	T	R	L	T	R
Init Unmet	0.0	0.0	0.0	0.0	0.0	0.0	0.0	0.0	0.0	0.0	0.0	0.0

Arriv. Type	3	3	3	3	3	3	3	3	3	3	3	3
Unit Ext.	3.0	3.0	3.0	3.0	3.0	3.0	3.0	3.0	3.0	3.0	3.0	3.0
I Factor		1.000			1.000			1.000			1.000	
Lost Time	2.0	2.0	2.0	2.0	2.0	2.0	2.0	2.0	2.0	2.0	2.0	2.0
Ext of g	2.0	2.0	2.0	2.0	2.0	2.0	2.0	2.0	2.0	2.0	2.0	2.0
Ped Min g		3.2			3.2			3.2			3.2	

PHASE DATA

Phase Combination		1	2	3	4			5	6	7	8
EB	Left	P	P			NB	Left	P	P		
	Thru		P				Thru		P		
	Right		P				Right		P		
	Peds						Peds				
WB	Left	P	P			SB	Left	P	P		
	Thru		P				Thru		P		
	Right		P				Right		P		
	Peds						Peds				
NB	Right	P				EB	Right				
SB	Right	P				WB	Right				
Green		4.0	26.0					18.0	24.0		
Yellow		3.0	3.0					3.0	3.0		
All Red		1.0	1.0					1.0	1.0		

Cycle Length: 88.0 se

VOLUME ADJUSTMENT AND SATURATION FLOW WORKSHEET

Volume Adjustment

	Eastbound			Westbound			Northbound			Southbound		
	L	T	R	L	T	R	L	T	R	L	T	R
Volume, V	300	375	200	75	800	225	475	690	50	175	335	200
PHF	0.90	0.90	0.90	0.90	0.90	0.90	0.90	0.90	0.90	0.90	0.90	0.90
Adj flow	333	417	167	83	889	194	528	767	0	194	372	167
No. Lanes	2	1	1	1	2	1	2	2	1	2	2	1
Lane group	L	T	R	L	T	R	L	T	R	L	T	R
Adj flow	333	417	167	83	889	194	528	767	0	194	372	167
Prop LTs	1.000	0.000		1.000	0.000		1.000	0.000		1.000	0.000	
Prop RTs		0.000	1.000		0.000	1.000		0.000	1.000		0.000	1.000

Saturation Flow Rate (see Exhibit 16-7 to determine the adjustment factors)

	Eastbound			Westbound			Northbound			Southbound		
LG	L	T	R	L	T	R	L	T	R	L	T	R
So	1900	1900	1900	1900	1900	1900	1900	1900	1900	1900	1900	1900
Lanes	2	1	1	1	2	1	2	2	1	2	2	1
fW	1.000	1.000	1.000	1.000	1.000	1.000	1.000	1.000	1.000	1.000	1.000	1.00
fHV	1.000	1.000	1.000	1.000	1.000	1.000	1.000	1.000	1.000	1.000	1.000	1.00
fG	1.000	1.000	1.000	1.000	1.000	1.000	1.000	1.000	1.000	1.000	1.000	1.00
fP	1.000	1.000	1.000	1.000	1.000	1.000	1.000	1.000	1.000	1.000	1.000	1.00
fBB	1.000	1.000	1.000	1.000	1.000	1.000	1.000	1.000	1.000	1.000	1.000	1.00
fA	1.00	1.00	1.00	1.00	1.00	1.00	1.00	1.00	1.00	1.00	1.00	1.00
fLU	0.97	1.00	1.00	1.00	0.95	1.00	0.97	0.95	1.00	0.97	0.95	1.00

fRT		1.000	0.850		1.000	0.850		1.000	0.850		1.000	0.85
fLT	0.950	1.000		0.950	1.000		0.950	1.000		0.950	1.000	
Sec.	0.424			0.195			0.277			0.404		
fLpb	1.000	1.000		1.000	1.000		1.000	1.000		1.000	1.000	
fRpb		1.000	1.000		1.000	1.000		1.000	1.000		1.000	1.00
S	3502	1900	1615	1805	3610	1615	3502	3610	1615	3502	3610	1615
Sec.	1564			371			1020			1488		

CAPACITY AND LOS WORKSHEET

Capacity Analysis and Lane Group Capacity

Appr/ Mvmt	Lane Group	Adj Flow Rate (v)	Adj Sat Flow Rate (s)	Flow Ratio (v/s)	Green Ratio (g/C)	--Lane Group-- Capacity (c)	v/c Ratio
Eastbound							
Prot		159	3502	0.05	0.045	159	1.00
Perm		174	1564	0.11	0.341	533	0.33
Left	L	333			0.39	692	0.48
Prot							
Perm							
Thru	T	417	1900	0.22	0.30	561	0.74
Right	R	167	1615	0.10	0.30	477	0.35
Westbound							
Prot		82	1805	# 0.05	0.045	82	1.00
Perm		1	371	0.00	0.341	126	0.01
Left	L	83			0.39	208	0.40
Prot							
Perm							
Thru	T	889	3610	# 0.25	0.30	1067	0.83
Right	R	194	1615	0.12	0.30	477	0.41
Northbound							
Prot		528	3502	# 0.15	0.205	716	0.74
Perm		0	1020	0.00	0.318	325	0.00
Left	L	528			0.52	1041	0.51
Prot							
Perm							
Thru	T	767	3610	# 0.21	0.27	985	0.78
Right	R	0	1615	0.00	0.36	587	0.00
Southbound							
Prot		194	3502	0.06	0.205	716	0.27
Perm		0	1488	0.00	0.318	473	0.00
Left	L	194			0.52	1189	0.16
Prot							
Perm							
Thru	T	372	3610	0.10	0.27	985	0.38
Right	R	167	1615	0.10	0.36	587	0.28

Sum of flow ratios for critical lane groups, Yc = Sum (v/s) = 0.65
Total lost time per cycle, L = 16.00 sec
Critical flow rate to capacity ratio, Xc = (Yc)(C)/(C-L) = 0.80

Control Delay and LOS Determination

Appr/ Lane Grp	Ratios v/c	g/C	Unf Del d1	Prog Adj Fact	Lane Grp Cap	Incremental Factor k	Del d2	Res Del d3	Lane Group Delay	LOS	Approach Delay	LOS
Eastbound												
L	0.48	0.39	21.6	1.000	692	0.50	2.4	0.0	24.0	C		
T	0.74	0.30	28.0	1.000	561	0.50	8.6	0.0	36.6	D	30.2	C

R	0.35	0.30	24.4	1.000	477	0.50	2.0	0.0	26.4	C		
Westbound												
L	0.40	0.39	19.5	1.000	208	0.50	5.6	0.0	25.2	C		
T	0.83	0.30	29.0	1.000	1067	0.50	7.6	0.0	36.6	D	34.3	C
R	0.41	0.30	24.8	1.000	477	0.50	2.6	0.0	27.4	C		
Northbound												
L	0.51	0.52	12.4	1.000	1041	0.50	1.8	0.0	14.1	B		
T	0.78	0.27	29.5	1.000	985	0.50	6.1	0.0	35.6	D	26.8	C
R	0.00	0.36	17.8	1.000	587	0.50	0.0	0.0	17.8	B		
Southbound												
L	0.16	0.52	12.6	1.000	1189	0.50	0.3	0.0	12.9	B		
T	0.38	0.27	25.9	1.000	985	0.50	1.1	0.0	27.0	C	22.0	C
R	0.28	0.36	19.9	1.000	587	0.50	1.2	0.0	21.1	C		

Intersection delay = 28.8 (sec/veh) Intersection LOS = C

SUPPLEMENTAL PERMITTED LT WORKSHEET
for exclusive lefts

Input

	EB	WB	NB	SB
Cycle length, C 88.0 sec				
Total actual green time for LT lane group, G (s)	34.0	34.0	46.0	46.
Effective permitted green time for LT lane group, g(s)	30.0	30.0	28.0	28.
Opposing effective green time, go (s)	26.0	26.0	24.0	24.
Number of lanes in LT lane group, N	2	1	2	2
Number of lanes in opposing approach, No	2	1	2	2
Adjusted LT flow rate, VLT (veh/h)	333	83	528	194
Proportion of LT in LT lane group, PLT	1.000	1.000	1.000	1.0
Proportion of LT in opposing flow, PLTo	0.00	0.00	0.00	0.0
Adjusted opposing flow rate, Vo (veh/h)	889	417	372	767
Lost time for LT lane group, tL	4.00	4.00	4.00	4.0
Computation				
LT volume per cycle, LTC=VLTC/3600	8.14	2.03	12.91	4.7
Opposing lane util. factor, fLUo	0.95	1.00	0.95	0.9
Opposing flow, Volc=VoC/[3600(No)fLUo] (veh/ln/cyc)	11.44	10.19	4.79	9.8
gf=G[exp(- a * (LTC ** b))]-tl, gf<=g	0.0	0.0	0.0	0.0
Opposing platoon ratio, Rpo (refer Exhibit 16-11)	1.00	1.00	1.00	1.0
Opposing Queue Ratio, qro=Max[1-Rpo(go/C),0]	0.70	0.70	0.73	0.7
gq, (see Exhibit C16-4,5,6,7,8)	21.78	18.69	7.81	18.
gu=g-gq if gq>=gf, or = g-gf if gq<gf	8.22	11.31	20.19	9.5
n=Max(gq-gf)/2,0)	10.89	9.35	3.91	9.2
PTHo=1-PLTo	1.00	1.00	1.00	1.0
PL*=PLT[1+(N-1)g/(gf+gu/EL1+4.24)]	5.37	1.00	2.87	4.6
EL1 (refer to Exhibit C16-3)	3.13	1.93	1.88	2.7
EL2=Max((1-Ptho**n)/Plto, 1.0)				
fmin=2(1+PL)/g or fmin=2(1+Pl)/g	0.42	0.13	0.28	0.4
gdiff=max(gq-gf,0)	0.00	0.00	0.00	0.0
fm=[gf/g]+[gu/g]/[1+PL(EL1-1)], (min=fmin;max=1.00)	0.42	0.20	0.28	0.4
flt=fm=[gf/g]+[gu/g]/[1+PL(EL1-1)]+[gdiff/g]/[1+PL(EL2-1)],(fmin<=fm<=1.00)				
or flt=[fm+0.91(N-1)]/N**				
Left-turn adjustment, fLT	0.424	0.195	0.277	0.4

For special case of single-lane approach opposed by multilane approach, see text.

* If Pl>=1 for shared left-turn lanes with N>1, then assume de-facto left-turn lane and redo calculations.

** For permitted left-turns with multiple exclusive left-turn lanes, flt=fm.
For special case of multilane approach opposed by single-lane approach
or when gf>gq, see text.

SUPPLEMENTAL PERMITTED LT WORKSHEET
for shared lefts

Input

	EB	WB	NB	SB
Cycle length, C 88.0 sec				
Total actual green time for LT lane group, G (s)				
Effective permitted green time for LT lane group, g(s)				
Opposing effective green time, go (s)				
Number of lanes in LT lane group, N				
Number of lanes in opposing approach, No				
Adjusted LT flow rate, VLT (veh/h)				
Proportion of LT in LT lane group, PLT	0.000	0.000	0.000	0.0
Proportion of LT in opposing flow, PLTo				
Adjusted opposing flow rate, Vo (veh/h)				
Lost time for LT lane group, tL				
Computation				
LT volume per cycle, LTC=VLTC/3600				
Opposing lane util. factor, fLUo	0.95	1.00	0.95	0.9
Opposing flow, Volc=VoC/[3600(No)fLUo] (veh/ln/cyc)				
gf=G[exp(- a * (LTC ** b))]-tl, gf<=g				
Opposing platoon ratio, Rpo (refer Exhibit 16-11)				
Opposing Queue Ratio, qro=Max[1-Rpo(go/C),0]				
gq, (see Exhibit C16-4,5,6,7,8)				
gu=g-gq if gq>=gf, or = g-gf if gq<gf				
n=Max(gq-gf)/2,0)				
PTHo=1-PLTo				
PL*=PLT[1+(N-1)g/(gf+gu/EL1+4.24)]				
EL1 (refer to Exhibit C16-3)				
EL2=Max((1-Ptho**n)/Plto, 1.0)				
fmin=2(1+PL)/g or fmin=2(1+Pl)/g				
gdiff=max(gq-gf,0)				
fm=[gf/g]+[gu/g]/[1+PL(EL1-1)], (min=fmin;max=1.00)				
flt=fm=[gf/g]+[gu/g]/[1+PL(EL1-1)]+[gdiff/g]/[1+PL(EL2-1)],(fmin<=fm<=1.00)				
or flt=[fm+0.91(N-1)]/N**				
Left-turn adjustment, fLT				

For special case of single-lane approach opposed by multilane approach,
see text.
* If Pl>=1 for shared left-turn lanes with N>1, then assume de-facto
  left-turn lane and redo calculations.
** For permitted left-turns with multiple exclusive left-turn lanes, flt=fm.
For special case of multilane approach opposed by single-lane approach
or when gf>gq, see text.

SUPPLEMENTAL PEDESTRIAN-BICYCLE EFFECTS WORKSHEET

Permitted Left Turns

	EB	WB	NB	SB
Effective pedestrian green time, gp (s)				
Conflicting pedestrian volume, Vped (p/h)				
Pedestrian flow rate, Vpedg (p/h)				
OCCpedg				
Opposing queue clearing green, gq (s)				
Eff. ped. green consumed by opp. veh. queue, gq/gp				
OCCpedu				

Opposing flow rate, Vo (veh/h)
OCCr
Number of cross-street receiving lanes, Nrec
Number of turning lanes, Nturn
ApbT
Proportion of left turns, PLT
Proportion of left turns using protected phase, PLTA
Left-turn adjustment, fLpb
Permitted Right Turns
Effective pedestrian green time, gp (s)
Conflicting pedestrian volume, Vped (p/h)
Conflicting bicycle volume, Vbic (bicycles/h)
Vpedg
OCCpedg
Effective green, g (s)
Vbicg
OCCbicg
OCCr
Number of cross-street receiving lanes, Nrec
Number of turning lanes, Nturn
ApbT
Proportion right-turns, PRT
Proportion right-turns using protected phase, PRTA
Right turn adjustment, fRpb

SUPPLEMENTAL UNIFORM DELAY WORKSHEET

		EBLT	WBLT	NBLT	SBLT
Cycle length, C	88.0 sec				
Adj. LT vol from Vol Adjustment Worksheet, v		333	83	528	194
v/c ratio from Capacity Worksheet, X		0.48	0.40	0.51	0.16
Protected phase effective green interval, g (s)		4.0	4.0	18.0	18.0
Opposing queue effective green interval, gq		21.78	18.69	7.81	18.5
Unopposed green interval, gu		8.22	11.31	20.19	9.50
Red time r=(C-g-gq-gu)		54.0	54.0	42.0	42.0
Arrival rate, qa=v/(3600(max[X,1.0]))		0.09	0.02	0.15	0.05
Protected ph. departure rate, Sp=s/3600		0.973	0.501	0.973	0.97
Permitted ph. departure rate, Ss=s(gq+gu)/(gu*3600)		1.59	0.27	0.39	1.22
XPerm		0.21	0.22	0.52	0.13
XProt		1.38	0.67	0.50	0.18
Case		2	1	1	1
Queue at beginning of green arrow, Qa		4.99	1.25	6.16	2.26
Queue at beginning of unsaturated green, Qu		1.04	0.43	1.15	1.00
Residual queue, Qr		1.47	0.00	0.00	0.00
Uniform Delay, d1		21.6	19.5	12.4	12.6

DELAY/LOS WORKSHEET WITH INITIAL QUEUE

Appr/ Lane Group	Initial Unmet Demand Q veh	Dur. Unmet Demand t hrs.	Uniform Delay Unadj. ds	Uniform Delay Adj. d1 sec	Initial Queue Param. u	Final Unmet Demand Q veh	Initial Queue Delay d3 sec	Lane Group Delay d sec
Eastbound								

Westbound

Northbound

Southbound

Intersection Delay 28.8 sec/veh Intersection LOS C

BACK OF QUEUE WORKSHEET

	Eastbound			Westbound			Northbound			Southbound		
LaneGroup	L	T	R	L	T	R	L	T	R	L	T	R
Init Queue	0.0	0.0	0.0	0.0	0.0	0.0	0.0	0.0	0.0	0.0	0.0	0.0
Flow Rate	171	417	167	83	467	194	272	403	0	99	195	167
So	1900	1900	1900	1900	1900	1900	1900	1900	1900	1900	1900	1900
No.Lanes	2	1	1	1	2	1	2	2	1	2	2	1
SL	1805	1900	1615	1805	1900	1615	1805	1900	1615	1805	1900	1615
LnCapacity	356	561	477	208	561	477	536	518	587	612	518	587
Flow Ratio	0.09	0.22	0.10	0.05	0.25	0.12	0.15	0.21	0.00	0.05	0.10	0.10
v/c Ratio	0.48	0.74	0.35	0.40	0.83	0.41	0.51	0.78	0.00	0.16	0.38	0.28
Grn Ratio	0.39	0.30	0.30	0.39	0.30	0.30	0.52	0.27	0.36	0.52	0.27	0.36
I Factor		1.000			1.000			1.000			1.000	
AT or PVG	3	3	3	3	3	3	3	3	3	3	3	3
Pltn Ratio	1.00	1.00	1.00	1.00	1.00	1.00	1.00	1.00	1.00	1.00	1.00	1.00
PF2	1.00	1.00	1.00	1.00	1.00	1.00	1.00	1.00	1.00	1.00	1.00	1.00
Q1	2.6	9.2	3.2	1.3	10.7	3.8	3.5	9.1	0.0	1.2	3.9	2.9
kB	0.9	0.8	0.7	0.9	0.8	0.7	1.1	0.7	0.8	1.1	0.7	0.8
Q2	0.8	1.1	0.4	0.4	3.0	0.5	1.1	2.2	0.0	0.2	0.4	0.3
Q Average	3.4	10.3	3.6	1.6	13.6	4.3	4.6	11.3	0.0	1.4	4.3	3.2
Q Spacing	25.0	25.0	25.0	25.0	25.0	25.0	25.0	25.0	25.0	25.0	25.0	25.0
Q Storage	0	0	0	0	0	0	0	0	0	0	0	0
Q S Ratio												
70th Percentile Output:												
fB%	1.3	1.2	1.2	1.3	1.2	1.2	1.2	1.2	1.3	1.3	1.2	1.3
BOQ	4.3	12.5	4.5	2.1	16.5	5.3	5.7	13.6	0.0	1.8	5.3	4.0
QSRatio												
85th Percentile Output:												
fB%	1.6	1.4	1.5	1.6	1.4	1.5	1.5	1.4	1.7	1.6	1.5	1.6
BOQ	5.3	14.8	5.5	2.7	19.4	6.5	7.0	16.1	0.0	2.3	6.5	5.0
QSRatio												
90th Percentile Output:												
fB%	1.8	1.6	1.7	1.9	1.5	1.7	1.7	1.6	2.0	1.9	1.7	1.8
BOQ	6.0	16.1	6.2	3.1	20.9	7.3	7.8	17.5	0.0	2.6	7.3	5.6
QSRatio												
95th Percentile Output:												
fB%	2.1	1.7	2.1	2.3	1.7	2.0	2.0	1.7	2.6	2.4	2.0	2.1
BOQ	7.2	17.8	7.5	3.8	22.7	8.6	9.2	19.2	0.0	3.3	8.7	6.8
QSRatio												
98th Percentile Output:												

fB%	2.5	1.9	2.4	2.8	1.8	2.3	2.3	1.9	3.2	2.8	2.3	2.5
BOQ	8.4	19.5	8.7	4.6	24.5	10.0	10.6	20.9	0.0	4.0	10.0	8.0
QSRatio												

ERROR MESSAGES

No errors to report.

HCS2000: Signalized Intersections Release 4.1c

Analyst: Scott M.
Agency:
Date: 6/24/05
Period: am
Project ID:
E/W St:

Inter.: Forest Pkwy / Ellenwood Rd
Area Type: All other areas
Jurisd:
Year : 2032

N/S St:

SIGNALIZED INTERSECTION SUMMARY

	Eastbound			Westbound			Northbound			Southbound		
	L	T	R	L	T	R	L	T	R	L	T	R
No. Lanes	2	2	1	2	2	1	2	2	2	1	2	1
LGConfig	L	TR	R	L	TR	R	L	T	R	L	T	R
Volume	260	515	100	300	1475	150	275	630	425	110	295	275
Lane Width	12.0	12.0	12.0	12.0	12.0	12.0	12.0	12.0	12.0	12.0	12.0	12.0
RTOR Vol			25			25			50			50

Duration 0.25 Area Type: All other areas

Signal Operations

Phase Combination	1	2	3	4	5	6	7	8
EB Left	P	P			NB Left	P	P	
Thru		P			Thru		P	
Right		P			Right		P	
Peds					Peds			
WB Left	P	P			SB Left	P	P	
Thru		P			Thru		P	
Right		P			Right		P	
Peds					Peds			
NB Right					EB Right			
SB Right					WB Right			
Green	4.0	41.0				6.0	21.0	
Yellow	3.0	3.0				3.0	3.0	
All Red	1.0	1.0				1.0	1.0	

Cycle Length: 88.0 sec

Intersection Performance Summary

Appr/ Lane Grp	Lane Group Capacity	Adj Sat Flow Rate (s)	Ratios v/c	g/C	Lane Group Delay	LOS	Approach Delay	LOS
Eastbound								
L	1105	3502	0.26	0.56	19.7	B		
TR	1682	3610	0.34	0.47	15.5	B	16.6	B
R	752	1615	0.11	0.47	13.5	B		
Westbound								
L	517	3502	0.64	0.56	23.9	C		
TR	1682	3610	0.97	0.47	39.6	D	35.5	D
R	752	1615	0.18	0.47	14.3	B		
Northbound								
L	555	3502	0.55	0.35	24.5	C		
T	861	3610	0.81	0.24	39.9	D	34.9	C
R	678	2842	0.62	0.24	34.0	C		
Southbound								
L	209	1805	0.58	0.35	33.1	C		
T	861	3610	0.38	0.24	29.3	C	33.2	C
R	385	1615	0.65	0.24	38.4	D		

Intersection Delay = 31.6 (sec/veh) Intersection LOS = C

HCS2000: Signalized Intersections Release 4.1c

Gdot
Gdot
#2 Capitol Square

Atlanta, Georgia 30334
Phone: Fax:
E-Mail:

OPERATIONAL ANALYSIS

Analyst:	Scott M.
Agency/Co.:	
Date Performed:	6/24/05
Analysis Time Period:	am
Intersection:	Forest Pkwy / Ellenwood Rd
Area Type:	All other areas
Jurisdiction:	
Analysis Year:	2032
Project ID:	

East/West Street North/South Street

VOLUME DATA

	Eastbound			Westbound			Northbound			Southbound		
	L	T	R	L	T	R	L	T	R	L	T	R
Volume	260	515	100	300	1475	150	275	630	425	110	295	275
% Heavy Veh	0	0	0	0	0	0	0	0	0	0	0	0
PHF	0.90	0.90	0.90	0.90	0.90	0.90	0.90	0.90	0.90	0.90	0.90	0.90
PK 15 Vol	72	143	28	83	410	42	76	175	118	31	82	76
Hi Ln Vol												
% Grade		0			0			0			0	
Ideal Sat	1900	1900	1900	1900	1900	1900	1900	1900	1900	1900	1900	1900
ParkExist												
NumPark												
No. Lanes	2	2	1	2	2	1	2	2	2	1	2	1
LGConfig	L	TR	R	L	TR	R	L	T	R	L	T	R
Lane Width	12.0	12.0	12.0	12.0	12.0	12.0	12.0	12.0	12.0	12.0	12.0	12.0
RTOR Vol			25			25			50			50
Adj Flow	289	572	83	333	1639	139	306	700	417	122	328	250
%InSharedLn			0			0						
Prop LTs	1.000	0.000		1.000	0.000		1.000	0.000		1.000	0.000	
Prop RTs		0.000	1.000		0.000	1.000		0.000	1.000		0.000	1.000
Peds Bikes	0			0			0			0		
Buses	0	0	0	0	0	0	0	0	0	0	0	0
%InProtPhase	0.0			0.0			0.0			0.0		

Duration 0.25 Area Type: All other areas

OPERATING PARAMETERS

	Eastbound			Westbound			Northbound			Southbound		
	L	T	R	L	T	R	L	T	R	L	T	R
Init Unmet	0.0	0.0	0.0	0.0	0.0	0.0	0.0	0.0	0.0	0.0	0.0	0.0

Arriv. Type	3	3	3	3	3	3	3	3	3	3	3	3
Unit Ext.	3.0	3.0	3.0	3.0	3.0	3.0	3.0	3.0	3.0	3.0	3.0	3.0
I Factor		1.000			1.000			1.000			1.000	
Lost Time	2.0	2.0	2.0	2.0	2.0	2.0	2.0	2.0	2.0	2.0	2.0	2.0
Ext of g	2.0	2.0	2.0	2.0	2.0	2.0	2.0	2.0	2.0	2.0	2.0	2.0
Ped Min g		3.2			3.2			3.2			3.2	

PHASE DATA

Phase Combination		1	2	3	4			5	6	7	8
EB	Left	P	P			NB	Left	P	P		
	Thru		P				Thru		P		
	Right		P				Right		P		
	Peds						Peds				
WB	Left	P	P			SB	Left	P	P		
	Thru		P				Thru		P		
	Right		P				Right		P		
	Peds						Peds				
NB	Right					EB	Right				
SB	Right					WB	Right				
Green		4.0	41.0					6.0	21.0		
Yellow		3.0	3.0					3.0	3.0		
All Red		1.0	1.0					1.0	1.0		

Cycle Length: 88.0 se

VOLUME ADJUSTMENT AND SATURATION FLOW WORKSHEET

Volume Adjustment

	Eastbound			Westbound			Northbound			Southbound		
	L	T	R	L	T	R	L	T	R	L	T	R
Volume, V	260	515	100	300	1475	150	275	630	425	110	295	275
PHF	0.90	0.90	0.90	0.90	0.90	0.90	0.90	0.90	0.90	0.90	0.90	0.90
Adj flow	289	572	83	333	1639	139	306	700	417	122	328	250
No. Lanes	2	2	1	2	2	1	2	2	2	1	2	1
Lane group	L	TR	R	L	TR	R	L	T	R	L	T	R
Adj flow	289	572	83	333	1639	139	306	700	417	122	328	250
Prop LTs	1.000	0.000		1.000	0.000		1.000	0.000		1.000	0.000	
Prop RTs		0.000	1.000		0.000	1.000		0.000	1.000		0.000	1.000

Saturation Flow Rate (see Exhibit 16-7 to determine the adjustment factors)

	Eastbound			Westbound			Northbound			Southbound		
LG	L	TR	R	L	TR	R	L	T	R	L	T	R
So	1900	1900	1900	1900	1900	1900	1900	1900	1900	1900	1900	1900
Lanes	2	2	1	2	2	1	2	2	2	1	2	1
fW	1.000	1.000	1.000	1.000	1.000	1.000	1.000	1.000	1.000	1.000	1.000	1.00
fHV	1.000	1.000	1.000	1.000	1.000	1.000	1.000	1.000	1.000	1.000	1.000	1.00
fG	1.000	1.000	1.000	1.000	1.000	1.000	1.000	1.000	1.000	1.000	1.000	1.00
fP	1.000	1.000	1.000	1.000	1.000	1.000	1.000	1.000	1.000	1.000	1.000	1.00
fBB	1.000	1.000	1.000	1.000	1.000	1.000	1.000	1.000	1.000	1.000	1.000	1.00
fA	1.00	1.00	1.00	1.00	1.00	1.00	1.00	1.00	1.00	1.00	1.00	1.00
fLU	0.97	0.95	1.00	0.97	0.95	1.00	0.97	0.95	0.88	1.00	0.95	1.00

fRT		1.000	0.850		1.000	0.850		1.000	0.850		1.000	0.85
fLT	0.950	1.000		0.950	1.000		0.950	1.000		0.950	1.000	
Sec.	0.502			0.190			0.301			0.160		
fLpb	1.000	1.000		1.000	1.000		1.000	1.000		1.000	1.000	
fRpb		1.000	1.000		1.000	1.000		1.000	1.000		1.000	1.00
S	3502	3610	1615	3502	3610	1615	3502	3610	2842	1805	3610	1615
Sec.	1850			700			1111			304		

CAPACITY AND LOS WORKSHEET

Capacity Analysis and Lane Group Capacity

Appr/ Mvmt	Lane Group	Adj Flow Rate (v)	Adj Sat Flow Rate (s)	Flow Ratio (v/s)	Green Ratio (g/C)	--Lane Group-- Capacity (c)	v/c Ratio
Eastbound							
Prot		159	3502	0.05	0.045	159	1.00
Perm		130	1850	0.07	0.511	946	0.14
Left	L	289			0.56	1105	0.26
Prot							
Perm							
Thru	TR	572	3610	0.16	0.47	1682	0.34
Right	R	83	1615	0.05	0.47	752	0.11
Westbound							
Prot		159	3502	# 0.05	0.045	159	1.00
Perm		174	700	0.25	0.511	358	0.49
Left	L	333			0.56	517	0.64
Prot							
Perm							
Thru	TR	1639	3610	# 0.45	0.47	1682	0.97
Right	R	139	1615	0.09	0.47	752	0.18
Northbound							
Prot		239	3502	# 0.07	0.068	239	1.00
Perm		67	1111	0.06	0.284	316	0.21
Left	L	306			0.35	555	0.55
Prot							
Perm							
Thru	T	700	3610	# 0.19	0.24	861	0.81
Right	R	417	2842	0.15	0.24	678	0.62
Southbound							
Prot		122	1805	0.07	0.068	123	0.99
Perm		0	304	0.00	0.284	86	0.00
Left	L	122			0.35	209	0.58
Prot							
Perm							
Thru	T	328	3610	0.09	0.24	861	0.38
Right	R	250	1615	0.15	0.24	385	0.65

Sum of flow ratios for critical lane groups, Yc = Sum (v/s) = 0.76
Total lost time per cycle, L = 16.00 sec
Critical flow rate to capacity ratio, Xc = (Yc)(C)/(C-L) = 0.93

Control Delay and LOS Determination

Appr/ Lane Grp	Ratios v/c	g/C	Unf Del d1	Prog Adj Fact	Lane Grp Cap	Incremental Factor k	Del d2	Res Del d3	Lane Group Delay	LOS	Approach Delay	LOS
Eastbound												
L	0.26	0.56	19.1	1.000	1105	0.50	0.6	0.0	19.7	B		
TR	0.34	0.47	14.9	1.000	1682	0.50	0.6	0.0	15.5	B	16.6	B

R	0.11	0.47	13.2	1.000	752	0.50	0.3	0.0	13.5	B		
Westbound												
L	0.64	0.56	17.8	1.000	517	0.50	6.1	0.0	23.9	C		
TR	0.97	0.47	23.0	1.000	1682	0.50	16.7	0.0	39.6	D	35.5	D
R	0.18	0.47	13.7	1.000	752	0.50	0.5	0.0	14.3	B		
Northbound												
L	0.55	0.35	20.6	1.000	555	0.50	3.9	0.0	24.5	C		
T	0.81	0.24	31.6	1.000	861	0.50	8.3	0.0	39.9	D	34.9	C
R	0.62	0.24	29.9	1.000	678	0.50	4.1	0.0	34.0	C		
Southbound												
L	0.58	0.35	21.7	1.000	209	0.50	11.4	0.0	33.1	C		
T	0.38	0.24	28.1	1.000	861	0.50	1.3	0.0	29.3	C	33.2	C
R	0.65	0.24	30.2	1.000	385	0.50	8.2	0.0	38.4	D		

Intersection delay = 31.6 (sec/veh) Intersection LOS = C

SUPPLEMENTAL PERMITTED LT WORKSHEET
for exclusive lefts

Input

	EB	WB	NB	SB
Cycle length, C 88.0 sec				
Total actual green time for LT lane group, G (s)	49.0	49.0	31.0	31.
Effective permitted green time for LT lane group, g(s)	45.0	45.0	25.0	25.
Opposing effective green time, go (s)	41.0	41.0	21.0	21.
Number of lanes in LT lane group, N	2	2	2	1
Number of lanes in opposing approach, No	2	2	2	2
Adjusted LT flow rate, VLT (veh/h)	289	333	306	122
Proportion of LT in LT lane group, PLT	1.000	1.000	1.000	1.0
Proportion of LT in opposing flow, PLTo	0.00	0.00	0.00	0.0
Adjusted opposing flow rate, Vo (veh/h)	1639	572	328	700
Lost time for LT lane group, tL	4.00	4.00	4.00	4.0
Computation				
LT volume per cycle, LTC=VLTC/3600	7.06	8.14	7.48	2.9
Opposing lane util. factor, fLUo	0.95	0.95	0.95	0.9
Opposing flow, Volc=VoC/[3600(No)fLUo] (veh/ln/cyc)	21.09	7.36	4.22	9.0
gf=G[exp(- a * (LTC ** b))]-tl, gf<=g	0.0	0.0	0.0	0.0
Opposing platoon ratio, Rpo (refer Exhibit 16-11)	1.00	1.00	1.00	1.0
Opposing Queue Ratio, qro=Max[1-Rpo(go/C),0]	0.53	0.53	0.76	0.7
gq, (see Exhibit C16-4,5,6,7,8)	41.00	9.44	7.11	17.
gu=g-gq if gq>=gf, or = g-gf if gq<gf	4.00	35.56	17.89	7.7
n=Max(gq-gf)/2,0)	20.50	4.72	3.55	8.6
PTHo=1-PLTo	1.00	1.00	1.00	1.0
PL*=PLT[1+(N-1)g/(gf+gu/EL1+4.24)]	10.29	3.28	2.77	1.0
EL1 (refer to Exhibit C16-3)	6.64	2.29	1.81	2.5
EL2=Max((1-Ptho**n)/Plto, 1.0)				
fmin=2(1+PL)/g or fmin=2(1+Pl)/g	0.50	0.19	0.30	0.1
gdiff=max(gq-gf,0)	0.00	0.00	0.00	0.0
fm=[gf/g]+[gu/g]/[1+PL(EL1-1)], (min=fmin;max=1.00)	0.50	0.19	0.30	0.1
flt=fm=[gf/g]+[gu/g]/[1+PL(EL1-1)]+[gdiff/g]/[1+PL(EL2-1)],(fmin<=fm<=1.00)				
or flt=[fm+0.91(N-1)]/N**				
Left-turn adjustment, fLT	0.502	0.190	0.301	0.1

For special case of single-lane approach opposed by multilane approach, see text.

* If Pl>=1 for shared left-turn lanes with N>1, then assume de-facto left-turn lane and redo calculations.

** For permitted left-turns with multiple exclusive left-turn lanes, flt=fm.
For special case of multilane approach opposed by single-lane approach
or when gf>gq, see text.

SUPPLEMENTAL PERMITTED LT WORKSHEET
for shared lefts

Input

	EB	WB	NB	SB
Cycle length, C 88.0 sec				
Total actual green time for LT lane group, G (s)				
Effective permitted green time for LT lane group, g(s)				
Opposing effective green time, go (s)				
Number of lanes in LT lane group, N				
Number of lanes in opposing approach, No				
Adjusted LT flow rate, VLT (veh/h)				
Proportion of LT in LT lane group, PLT	0.000	0.000	0.000	0.0
Proportion of LT in opposing flow, PLTo				
Adjusted opposing flow rate, Vo (veh/h)				
Lost time for LT lane group, tL				
Computation				
LT volume per cycle, LTC=VLTC/3600				
Opposing lane util. factor, fLUo	0.95	0.95	0.95	0.9
Opposing flow, Volc=VoC/[3600(No)fLUo] (veh/ln/cyc)				
gf=G[exp(- a * (LTC ** b))]-tl, gf<=g				
Opposing platoon ratio, Rpo (refer Exhibit 16-11)				
Opposing Queue Ratio, qro=Max[1-Rpo(go/C),0]				
gq, (see Exhibit C16-4,5,6,7,8)				
gu=g-gq if gq>=gf, or = g-gf if gq<gf				
n=Max(gq-gf)/2,0)				
PTHo=1-PLTo				
PL*=PLT[1+(N-1)g/(gf+gu/EL1+4.24)]				
EL1 (refer to Exhibit C16-3)				
EL2=Max((1-Ptho**n)/Plto, 1.0)				
fmin=2(1+PL)/g or fmin=2(1+Pl)/g				
gdiff=max(gq-gf,0)				
fm=[gf/g]+[gu/g]/[1+PL(EL1-1)], (min=fmin;max=1.00)				
flt=fm=[gf/g]+[gu/g]/[1+PL(EL1-1)]+[gdiff/g]/[1+PL(EL2-1)],(fmin<=fm<=1.00)				
or flt=[fm+0.91(N-1)]/N**				
Left-turn adjustment, fLT				

For special case of single-lane approach opposed by multilane approach,
see text.
* If Pl>=1 for shared left-turn lanes with N>1, then assume de-facto
  left-turn lane and redo calculations.
** For permitted left-turns with multiple exclusive left-turn lanes, flt=fm.
For special case of multilane approach opposed by single-lane approach
or when gf>gq, see text.

SUPPLEMENTAL PEDESTRIAN-BICYCLE EFFECTS WORKSHEET

Permitted Left Turns

	EB	WB	NB	SB
Effective pedestrian green time, gp (s)				
Conflicting pedestrian volume, Vped (p/h)				
Pedestrian flow rate, Vpedg (p/h)				
OCCpedg				
Opposing queue clearing green, gq (s)				
Eff. ped. green consumed by opp. veh. queue, gq/gp				
OCCpedu				

Opposing flow rate, Vo (veh/h)
OCCr
Number of cross-street receiving lanes, Nrec
Number of turning lanes, Nturn
ApbT
Proportion of left turns, PLT
Proportion of left turns using protected phase, PLTA
Left-turn adjustment, fLpb
Permitted Right Turns
Effective pedestrian green time, gp (s)
Conflicting pedestrian volume, Vped (p/h)
Conflicting bicycle volume, Vbic (bicycles/h)
Vpedg
OCCpedg
Effective green, g (s)
Vbicg
OCCbicg
OCCr
Number of cross-street receiving lanes, Nrec
Number of turning lanes, Nturn
ApbT
Proportion right-turns, PRT
Proportion right-turns using protected phase, PRTA
Right turn adjustment, fRpb

SUPPLEMENTAL UNIFORM DELAY WORKSHEET

		EBLT	WBLT	NBLT	SBLT
Cycle length, C	88.0 sec				
Adj. LT vol from Vol Adjustment Worksheet, v		289	333	306	122
v/c ratio from Capacity Worksheet, X		0.26	0.64	0.55	0.58
Protected phase effective green interval, g (s)		4.0	4.0	6.0	6.0
Opposing queue effective green interval, gq		41.00	9.44	7.11	17.2
Unopposed green interval, gu		4.00	35.56	17.89	7.76
Red time r=(C-g-gq-gu)		39.0	39.0	57.0	57.0
Arrival rate, qa=v/(3600(max[X,1.0]))		0.08	0.09	0.09	0.03
Protected ph. departure rate, Sp=s/3600		0.973	0.973	0.973	0.50
Permitted ph. departure rate, Ss=s(gq+gu)/(gu*3600)		5.78	0.25	0.43	0.27
XPerm		0.16	0.48	0.28	0.40
XProt		0.89	1.02	0.92	0.71
Case		1	2	1	1
Queue at beginning of green arrow, Qa		3.13	3.61	4.85	1.93
Queue at beginning of unsaturated green, Qu		3.29	3.87	0.60	0.58
Residual queue, Qr		0.00	0.09	0.00	0.00
Uniform Delay, d1		19.1	17.8	20.6	21.7

DELAY/LOS WORKSHEET WITH INITIAL QUEUE

Appr/ Lane Group	Initial Unmet Demand Q veh	Dur. Unmet Demand t hrs.	Uniform Delay Unadj. ds	Uniform Delay Adj. d1 sec	Initial Queue Param. u	Final Unmet Demand Q veh	Initial Queue Delay d3 sec	Lane Group Delay d sec
Eastbound								

Westbound

Northbound

Southbound

Intersection Delay 31.6 sec/veh Intersection LOS C

BACK OF QUEUE WORKSHEET

	Eastbound			Westbound			Northbound			Southbound		
LaneGroup	L	TR	R	L	TR	R	L	T	R	L	T	R
Init Queue	0.0	0.0	0.0	0.0	0.0	0.0	0.0	0.0	0.0	0.0	0.0	0.0
Flow Rate	148	301	83	171	862	139	157	368	236	122	172	250
So	1900	1900	1900	1900	1900	1900	1900	1900	1900	1900	1900	1900
No.Lanes	2	2	1	2	2	1	2	2	2	1	2	1
SL	1805	1900	1615	1805	1900	1615	1805	1900	1614	1805	1900	1615
LnCapacity	569	885	752	266	885	752	286	453	385	209	453	385
Flow Ratio	0.08	0.16	0.05	0.09	0.45	0.09	0.09	0.19	0.15	0.07	0.09	0.15
v/c Ratio	0.26	0.34	0.11	0.64	0.97	0.18	0.55	0.81	0.61	0.58	0.38	0.65
Grn Ratio	0.56	0.47	0.47	0.56	0.47	0.47	0.35	0.24	0.24	0.35	0.24	0.24
I Factor		1.000			1.000			1.000			1.000	
AT or PVG	3	3	3	3	3	3	3	3	3	3	3	3
Pltn Ratio	1.00	1.00	1.00	1.00	1.00	1.00	1.00	1.00	1.00	1.00	1.00	1.00
PF2	1.00	1.00	1.00	1.00	1.00	1.00	1.00	1.00	1.00	1.00	1.00	1.00
Q1	1.6	4.7	1.1	1.9	20.6	2.0	2.6	8.5	5.1	2.0	3.5	5.5
kB	1.1	1.0	0.9	1.1	1.0	0.9	0.8	0.6	0.6	0.8	0.6	0.6
Q2	0.4	0.5	0.1	1.8	9.1	0.2	1.0	2.3	0.9	1.1	0.4	1.0
Q Average	2.0	5.2	1.3	3.7	29.7	2.2	3.5	10.8	6.0	3.1	3.9	6.5
Q Spacing	25.0	25.0	25.0	25.0	25.0	25.0	25.0	25.0	25.0	25.0	25.0	25.0
Q Storage	0	0	0	0	0	0	0	0	0	0	0	0
Q S Ratio												
70th Percentile Output:												
fB%	1.3	1.2	1.3	1.2	1.2	1.3	1.2	1.2	1.2	1.3	1.2	1.2
BOQ	2.6	6.4	1.6	4.6	35.7	2.8	4.4	13.1	7.4	3.8	4.9	8.0
QSRatio												
85th Percentile Output:												
fB%	1.6	1.5	1.6	1.5	1.4	1.6	1.5	1.4	1.5	1.6	1.5	1.5
BOQ	3.2	7.8	2.0	5.7	41.7	3.5	5.5	15.5	9.0	4.8	6.0	9.7
QSRatio												
90th Percentile Output:												
fB%	1.8	1.7	1.9	1.7	1.5	1.8	1.7	1.6	1.6	1.8	1.7	1.6
BOQ	3.7	8.7	2.4	6.4	44.7	4.0	6.2	16.8	9.9	5.4	6.8	10.7
QSRatio												
95th Percentile Output:												
fB%	2.3	2.0	2.4	2.1	1.6	2.2	2.1	1.7	1.9	2.1	2.1	1.9
BOQ	4.6	10.1	3.0	7.7	47.7	4.9	7.4	18.6	11.5	6.6	8.1	12.2
QSRatio												
98th Percentile Output:												

fB%	2.7	2.2	2.9	2.4	1.7	2.7	2.4	1.9	2.1	2.5	2.4	2.1
BOQ	5.4	11.6	3.6	8.9	50.7	5.8	8.6	20.3	13.0	7.7	9.3	13.7
QSRatio												

ERROR MESSAGES

No errors to report.

HCS2000: Signalized Intersections Release 4.1c

Analyst: Scott M.
Agency:
Date: 6/24/05
Period: pm
Project ID:
E/W St:

Inter.: Campbell FUTURE
Area Type: All other areas
Jurisd:
Year : 2032

N/S St:

SIGNALIZED INTERSECTION SUMMARY

	Eastbound			Westbound			Northbound			Southbound		
	L	T	R	L	T	R	L	T	R	L	T	R
No. Lanes	0	1	0	0	1	1	1	2	1	1	2	1
LGConfig		LTR			LT	R	L	T	R	L	T	R
Volume	20	10	20	150	0	200	10	685	100	125	1190	10
Lane Width		12.0			12.0	12.0	12.0	12.0	12.0	12.0	12.0	12.0
RTOR Vol			0			50			50			10

Duration 0.25 Area Type: All other areas

Signal Operations

Phase Combination	1	2	3	4		5	6	7	8
EB Left					NB Left	P	P		
Thru	P				Thru		P		
Right	P				Right		P		
Peds					Peds				
WB Left	P				SB Left	P	P		
Thru	P				Thru		P		
Right	P				Right		P		
Peds					Peds				
NB Right					EB Right				
SB Right					WB Right				
Green	10.0					8.0	20.0		
Yellow	3.0					3.0	3.0		
All Red	1.0					1.0	1.0		

Cycle Length: 50.0 sec

Intersection Performance Summary

Appr/ Lane Grp	Lane Group Capacity	Adj Sat Flow Rate (s)	Ratios v/c	Ratios g/C	Lane Group Delay	Lane Group LOS	Approach Delay	Approach LOS
Eastbound								
LTR				0.20				
Westbound								
LT	261	1303	0.64	0.20	29.8	C	26.7	C
R	323	1615	0.52	0.20	23.7	C		
Northbound								
L	441	1805	0.02	0.64	7.0	A		
T	1444	3610	0.53	0.40	12.8	B	12.5	B
R	646	1615	0.09	0.40	9.6	A		
Southbound								
L	502	1805	0.28	0.64	5.8	A		
T	1444	3610	0.92	0.40	24.8	C	23.0	C
R	646	1615	0.00	0.40	9.0	A		

Intersection Delay = (sec/veh) Intersection LOS =

HCS2000: Signalized Intersections Release 4.1c

Gdot
Gdot
#2 Capitol Square

Atlanta, Georgia 30334
Phone: Fax:
E-Mail:

OPERATIONAL ANALYSIS

Analyst: Scott M.
Agency/Co.:
Date Performed: 6/24/05
Analysis Time Period: pm
Intersection: Campbell FUTURE
Area Type: All other areas
Jurisdiction:
Analysis Year: 2032
Project ID:

East/West Street North/South Street

VOLUME DATA

	Eastbound			Westbound			Northbound			Southbound		
	L	T	R	L	T	R	L	T	R	L	T	R
Volume	20	10	20	150	0	200	10	685	100	125	1190	10
% Heavy Veh	0	0	0	0	0	0	0	0	0	0	0	0
PHF	0.90	0.90	0.90	0.90	0.90	0.90	0.90	0.90	0.90	0.90	0.90	0.90
PK 15 Vol	6	3	6	42	0	56	3	190	28	35	331	3
Hi Ln Vol												
% Grade		0			0			0			0	
Ideal Sat		1900			1900	1900	1900	1900	1900	1900	1900	1900
ParkExist												
NumPark												
No. Lanes	0	1	0	0	1	1	1	2	1	1	2	1
LGConfig		LTR			LT	R	L	T	R	L	T	R
Lane Width		12.0			12.0	12.0	12.0	12.0	12.0	12.0	12.0	12.0
RTOR Vol			0			50			50			10
Adj Flow		55			167	167	11	761	56	139	1322	0
%InSharedLn												
Prop LTs		0.400			1.000		1.000	0.000		1.000	0.000	
Prop RTs	0.400			0.000		1.000	0.000		1.000	0.000		1.000
Peds Bikes	0			0			0			0		
Buses		0			0	0	0	0	0	0	0	0
%InProtPhase							0.0			0.0		

Duration 0.25 Area Type: All other areas

OPERATING PARAMETERS

	Eastbound			Westbound			Northbound			Southbound		
	L	T	R	L	T	R	L	T	R	L	T	R
Init Unmet		0.0			0.0	0.0	0.0	0.0	0.0	0.0	0.0	0.0

Arriv. Type	3	3 3	3 3 3	3 3 3
Unit Ext.	3.0	3.0 3.0	3.0 3.0 3.0	3.0 3.0 3.0
I Factor	1.000	1.000	1.000	1.000
Lost Time	2.0	2.0 2.0	2.0 2.0 2.0	2.0 2.0 2.0
Ext of g	2.0	2.0 2.0	2.0 2.0 2.0	2.0 2.0 2.0
Ped Min g	3.2	3.2	3.2	3.2

PHASE DATA

Phase Combination	1	2	3	4	5	6	7	8
EB Left					NB Left	P	P	
Thru			P		Thru		P	
Right			P		Right		P	
Peds					Peds			
WB Left			P		SB Left	P	P	
Thru			P		Thru		P	
Right			P		Right		P	
Peds					Peds			
NB Right					EB Right			
SB Right					WB Right			
Green			10.0			8.0	20.0	
Yellow			3.0			3.0	3.0	
All Red			1.0			1.0	1.0	

Cycle Length: 50.0 se

VOLUME ADJUSTMENT AND SATURATION FLOW WORKSHEET

Volume Adjustment

	Eastbound			Westbound			Northbound			Southbound		
	L	T	R	L	T	R	L	T	R	L	T	R
Volume, V	20	10	20	150	0	200	10	685	100	125	1190	10
PHF	0.90	0.90	0.90	0.90	0.90	0.90	0.90	0.90	0.90	0.90	0.90	0.90
Adj flow	22	11	22	167	0	167	11	761	56	139	1322	0
No. Lanes	0	1	0	0	1	1	1	2	1	1	2	1
Lane group		LTR			LT	R	L	T	R	L	T	R
Adj flow		55			167	167	11	761	56	139	1322	0
Prop LTs		0.400			1.000		1.000	0.000		1.000	0.000	
Prop RTs		0.400			0.000	1.000		0.000	1.000		0.000	1.000

Saturation Flow Rate (see Exhibit 16-7 to determine the adjustment factors)

	Eastbound			Westbound			Northbound			Southbound		
LG	LTR			LT	R		L	T	R	L	T	R
So	1900			1900	1900		1900	1900	1900	1900	1900	1900
Lanes	0 1	0	0	1	1		1	2	1	1	2	1
fW	1.000			1.000	1.000		1.000	1.000	1.000	1.000	1.000	1.00
fHV	1.000			1.000	1.000		1.000	1.000	1.000	1.000	1.000	1.00
fG	1.000			1.000	1.000		1.000	1.000	1.000	1.000	1.000	1.00
fP	1.000			1.000	1.000		1.000	1.000	1.000	1.000	1.000	1.00
fBB	1.000			1.000	1.000		1.000	1.000	1.000	1.000	1.000	1.00
fA	1.00			1.00	1.00		1.00	1.00	1.00	1.00	1.00	1.00
fLU	1.00			1.00	1.00		1.00	0.95	1.00	1.00	0.95	1.00

fRT	0.946	1.000	0.850		1.000	0.850		1.000	0.85
fLT		0.686		0.950	1.000		0.950	1.000	
Sec.				0.167			0.233		
fLpb	1.000	1.000		1.000	1.000		1.000	1.000	
fRpb	1.000	1.000	1.000		1.000	1.000		1.000	1.00
S		1303	1615	1805	3610	1615	1805	3610	1615
Sec.				317			443		

CAPACITY AND LOS WORKSHEET

Capacity Analysis and Lane Group Capacity

Appr/ Mvmt	Lane Group	Adj Flow Rate (v)	Adj Sat Flow Rate (s)	Flow Ratio (v/s)	Green Ratio (g/C)	--Lane Group-- Capacity (c)	v/c Ratio
Eastbound							
Prot							
Perm							
Left							
Prot							
Perm							
Thru	LTR	55			0.20		
Right							
Westbound							
Prot							
Perm							
Left							
Prot							
Perm							
Thru	LT	167	1303	0.13	0.20	261	0.64
Right	R	167	1615	0.10	0.20	323	0.52
Northbound							
Prot		11	1805	0.01	0.160	289	0.04
Perm		0	317	0.00	0.480	152	0.00
Left	L	11			0.64	441	0.02
Prot							
Perm							
Thru	T	761	3610	0.21	0.40	1444	0.53
Right	R	56	1615	0.03	0.40	646	0.09
Southbound							
Prot		139	1805	0.08	0.160	289	0.48
Perm		0	443	0.00	0.480	213	0.00
Left	L	139			0.64	502	0.28
Prot							
Perm							
Thru	T	1322	3610	0.37	0.40	1444	0.92
Right	R	0	1615	0.00	0.40	646	0.00

Sum of flow ratios for critical lane groups, Yc = Sum (v/s) = 0.00
Total lost time per cycle, L = 0.00 sec
Critical flow rate to capacity ratio, Xc = (Yc)(C)/(C-L) = 0.00

Control Delay and LOS Determination

Appr/ Lane Grp	Ratios v/c	g/C	Unf Del d1	Prog Adj Fact	Lane Grp Cap	Incremental Factor k	Del d2	Res Del d3	Lane Group Delay	LOS	Approach Delay	LOS
Eastbound												
LTR	0.20					0.50		0.0				

Westbound

LT	0.64	0.20	18.3	1.000	261	0.50	11.4	0.0	29.8	C	26.7	C
R	0.52	0.20	17.8	1.000	323	0.50	5.8	0.0	23.7	C		
Northbound												
L	0.02	0.64	6.9	1.000	441	0.50	0.1	0.0	7.0	A		
T	0.53	0.40	11.4	1.000	1444	0.50	1.4	0.0	12.8	B	12.5	B
R	0.09	0.40	9.3	1.000	646	0.50	0.3	0.0	9.6	A		
Southbound												
L	0.28	0.64	4.4	1.000	502	0.50	1.4	0.0	5.8	A		
T	0.92	0.40	14.2	1.000	1444	0.50	10.6	0.0	24.8	C	23.0	C
R	0.00	0.40	9.0	1.000	646	0.50	0.0	0.0	9.0	A		

Intersection delay = (sec/veh) Intersection LOS =
Errors exist. See bottom of text report.

SUPPLEMENTAL PERMITTED LT WORKSHEET
for exclusive lefts

Input

	EB	WB	NB	SB
Cycle length, C 50.0 sec				
Total actual green time for LT lane group, G (s)			32.0	32.
Effective permitted green time for LT lane group, g(s)			24.0	24.
Opposing effective green time, go (s)			20.0	20.
Number of lanes in LT lane group, N			1	1
Number of lanes in opposing approach, No			2	2
Adjusted LT flow rate, VLT (veh/h)			11	139
Proportion of LT in LT lane group, PLT			1.000	1.0
Proportion of LT in opposing flow, PLTo			0.00	0.0
Adjusted opposing flow rate, Vo (veh/h)			1322	761
Lost time for LT lane group, tL			4.00	4.0
Computation				
LT volume per cycle, LTC=VLTC/3600			0.15	1.9
Opposing lane util. factor, fLUo	1.00	1.00	0.95	0.9
Opposing flow, Volc=VoC/[3600(No)fLUo] (veh/ln/cyc)			9.66	5.5
gf=G[exp(- a * (LTC ** b))]-tl, gf<=g			0.0	0.0
Opposing platoon ratio, Rpo (refer Exhibit 16-11)			1.00	1.0
Opposing Queue Ratio, qro=Max[1-Rpo(go/C),0]			0.60	0.6
gq, (see Exhibit C16-4,5,6,7,8)			18.90	8.5
gu=g-gq if gq>=gf, or = g-gf if gq<gf			5.10	15.
n=Max(gq-gf)/2,0)			9.45	4.2
PTHo=1-PLTo			1.00	1.0
PL*=PLT[1+(N-1)g/(gf+gu/EL1+4.24)]			1.00	1.0
EL1 (refer to Exhibit C16-3)			4.82	2.7
EL2=Max((1-Ptho**n)/Plto, 1.0)				
fmin=2(1+PL)/g or fmin=2(1+Pl)/g			0.17	0.1
gdiff=max(gq-gf,0)			0.00	0.0
fm=[gf/g]+[gu/g]/[1+PL(EL1-1)], (min=fmin;max=1.00)			0.17	0.2
flt=fm=[gf/g]+[gu/g]/[1+PL(EL1-1)]+[gdiff/g]/[1+PL(EL2-1)],(fmin<=fm<=1.00)				
or flt=[fm+0.91(N-1)]/N**				
Left-turn adjustment, fLT			0.167	0.2

For special case of single-lane approach opposed by multilane approach, see text.

* If Pl>=1 for shared left-turn lanes with N>1, then assume de-facto left-turn lane and redo calculations.

** For permitted left-turns with multiple exclusive left-turn lanes, flt=fm.
For special case of multilane approach opposed by single-lane approach
or when gf>gq, see text.

SUPPLEMENTAL PERMITTED LT WORKSHEET
for shared lefts

Input

	EB	WB	NB	SB
Cycle length, C 50.0 sec				
Total actual green time for LT lane group, G (s)		10.0		
Effective permitted green time for LT lane group, g(s)		10.0		
Opposing effective green time, go (s)		10.0		
Number of lanes in LT lane group, N		1		
Number of lanes in opposing approach, No		1		
Adjusted LT flow rate, VLT (veh/h)		167		
Proportion of LT in LT lane group, PLT	0.400	1.000	0.000	0.0
Proportion of LT in opposing flow, PLTo		0.40		
Adjusted opposing flow rate, Vo (veh/h)		55		
Lost time for LT lane group, tL		4.00		
Computation				
LT volume per cycle, LTC=VLTC/3600		2.32		
Opposing lane util. factor, fLUo	1.00	1.00	0.95	0.9
Opposing flow, Volc=VoC/[3600(No)fLUo] (veh/ln/cyc)		0.76		
gf=G[exp(- a * (LTC ** b))]-tl, gf<=g		0.0		
Opposing platoon ratio, Rpo (refer Exhibit 16-11)		1.00		
Opposing Queue Ratio, qro=Max[1-Rpo(go/C),0]		0.80		
gq, (see Exhibit C16-4,5,6,7,8)		0.00		
gu=g-gq if gq>=gf, or = g-gf if gq<gf		10.00		
n=Max(gq-gf)/2,0)		0.00		
PTHo=1-PLTo		0.60		
PL*=PLT[1+(N-1)g/(gf+gu/EL1+4.24)]		1.00		
EL1 (refer to Exhibit C16-3)		1.46		
EL2=Max((1-Ptho**n)/Plto, 1.0)		1.00		
fmin=2(1+PL)/g or fmin=2(1+Pl)/g		0.40		
gdiff=max(gq-gf,0)		0.00		
fm=[gf/g]+[gu/g]/[1+PL(EL1-1)], (min=fmin;max=1.00)		0.69		
flt=fm=[gf/g]+[gu/g]/[1+PL(EL1-1)]+[gdiff/g]/[1+PL(EL2-1)],(fmin<=fm<=1.00)				
or flt=[fm+0.91(N-1)]/N**				
Left-turn adjustment, fLT		0.686		

For special case of single-lane approach opposed by multilane approach,
see text.
* If Pl>=1 for shared left-turn lanes with N>1, then assume de-facto
left-turn lane and redo calculations.
** For permitted left-turns with multiple exclusive left-turn lanes, flt=fm.
For special case of multilane approach opposed by single-lane approach
or when gf>gq, see text.

SUPPLEMENTAL PEDESTRIAN-BICYCLE EFFECTS WORKSHEET

Permitted Left Turns

	EB	WB	NB	SB
Effective pedestrian green time, gp (s)				
Conflicting pedestrian volume, Vped (p/h)				
Pedestrian flow rate, Vpedg (p/h)				
OCCpedg				
Opposing queue clearing green, gq (s)				
Eff. ped. green consumed by opp. veh. queue, gq/gp				
OCCpedu				

Opposing flow rate, Vo (veh/h)
OCCr
Number of cross-street receiving lanes, Nrec
Number of turning lanes, Nturn
ApbT
Proportion of left turns, PLT
Proportion of left turns using protected phase, PLTA
Left-turn adjustment, fLpb
Permitted Right Turns
Effective pedestrian green time, gp (s)
Conflicting pedestrian volume, Vped (p/h)
Conflicting bicycle volume, Vbic (bicycles/h)
Vpedg
OCCpedg
Effective green, g (s)
Vbicg
OCCbicg
OCCr
Number of cross-street receiving lanes, Nrec
Number of turning lanes, Nturn
ApbT
Proportion right-turns, PRT
Proportion right-turns using protected phase, PRTA
Right turn adjustment, fRpb

SUPPLEMENTAL UNIFORM DELAY WORKSHEET

	EBLT	WBLT	NBLT	SBLT
Cycle length, C 50.0 sec				
Adj. LT vol from Vol Adjustment Worksheet, v			11	139
v/c ratio from Capacity Worksheet, X			0.02	0.28
Protected phase effective green interval, g (s)			8.0	8.0
Opposing queue effective green interval, gq			18.90	8.59
Unopposed green interval, gu			5.10	15.4
Red time r=(C-g-gq-gu)			18.0	18.0
Arrival rate, qa=v/(3600(max[X,1.0]))			0.00	0.04
Protected ph. departure rate, Sp=s/3600			0.501	0.50
Permitted ph. departure rate, Ss=s(gq+gu)/(gu*3600)			0.41	0.19
XPerm			0.03	0.31
XProt			0.02	0.25
Case			1	1
Queue at beginning of green arrow, Qa			0.06	0.69
Queue at beginning of unsaturated green, Qu			0.06	0.33
Residual queue, Qr			0.00	0.00
Uniform Delay, d1			6.9	4.4

DELAY/LOS WORKSHEET WITH INITIAL QUEUE

Appr/ Lane Group	Initial Unmet Demand Q veh	Dur. Unmet Demand t hrs.	Uniform Delay Unadj. ds	Uniform Delay Adj. d1 sec	Initial Queue Param. u	Final Unmet Demand Q veh	Initial Queue Delay d3 sec	Lane Group Delay d sec
Eastbound								

Westbound

Northbound

Southbound

Intersection Delay sec/veh Intersection LOS

BACK OF QUEUE WORKSHEET

	Eastbound			Westbound		Northbound			Southbound		
LaneGroup		LTR		LT	R	L	T	R	L	T	R
Init Queue		0.0		0.0	0.0	0.0	0.0	0.0	0.0	0.0	0.0
Flow Rate		55		167	167	11	400	56	139	695	0
So		1900		1900	1900	1900	1900	1900	1900	1900	1900
No.Lanes	0	1	0	0 1	1	1	2	1	1	2	1
SL				1303	1615	1805	1900	1615	1805	1900	1615
LnCapacity				261	323	441	760	646	502	760	646
Flow Ratio				0.13	0.10	0.01	0.21	0.03	0.08	0.37	0.00
v/c Ratio				0.64	0.52	0.02	0.53	0.09	0.28	0.91	0.00
Grn Ratio		0.20		0.20	0.20	0.64	0.40	0.40	0.64	0.40	0.40
I Factor		1.000		1.000			1.000			1.000	
AT or PVG		3		3	3	3	3	3	3	3	3
Pltn Ratio				1.00	1.00	1.00	1.00	1.00	1.00	1.00	1.00
PF2				1.00	1.00	1.00	1.00	1.00	1.00	1.00	1.00
Q1				2.1	2.1	0.1	4.2	0.5	0.7	9.1	0.0
kB				0.3	0.3	0.8	0.6	0.6	0.8	0.6	0.6
Q2				0.5	0.4	0.0	0.7	0.1	0.3	4.4	0.0
Q Average				2.6	2.4	0.1	4.9	0.5	1.0	13.5	0.0
Q Spacing		25.0		25.0	25.0	25.0	25.0	25.0	25.0	25.0	25.0
Q Storage		0		0	0	0	0	0	0	0	0
Q S Ratio											
70th Percentile Output:											
fB%				1.3	1.3	1.3	1.2	1.3	1.3	1.2	1.3
BOQ				3.3	3.1	0.1	6.1	0.7	1.3	16.3	0.0
QSRatio											
85th Percentile Output:											
fB%				1.6	1.6	1.7	1.5	1.7	1.6	1.4	1.7
BOQ				4.1	3.9	0.1	7.4	0.9	1.7	19.2	0.0
QSRatio											
90th Percentile Output:											
fB%				1.8	1.8	2.0	1.7	1.9	1.9	1.5	2.0
BOQ				4.7	4.4	0.2	8.3	1.0	2.0	20.7	0.0
QSRatio											
95th Percentile Output:											
fB%				2.2	2.2	2.6	2.0	2.5	2.4	1.7	2.6
BOQ				5.7	5.4	0.2	9.7	1.3	2.5	22.5	0.0
QSRatio											
98th Percentile Output:											

fB%			2.6	2.6	3.2	2.3	3.0	2.9	1.8	3.2	
BOQ			6.8	6.4	0.2	11.1	1.6	3.1	24.3	0.0	
QSRatio											

ERROR MESSAGES

East bound left has no green time.
East bound left is shared but does not move with the adjacent movement.

HCS2000: Signalized Intersections Release 4.1c

Analyst: Scott M.
Agency:
Date: 6/22/05
Period: pm
Project ID:
E/W St:

Inter.: Anvil Block Rd
Area Type: All other areas
Jurisd:
Year : 2032

N/S St:

SIGNALIZED INTERSECTION SUMMARY

	Eastbound			Westbound			Northbound			Southbound		
	L	T	R	L	T	R	L	T	R	L	T	R
No. Lanes	1	2	1	2	2	0	1	2	1	2	2	1
LGConfig	L	T	R	L	TR		L	T	R	L	T	R
Volume	75	375	150	275	125	325	50	575	300	650	1000	25
Lane Width	12.0	12.0	12.0	12.0	12.0		12.0	12.0	12.0	12.0	12.0	12.0
RTOR Vol			50			50			50			25

Duration 0.25 Area Type: All other areas

Signal Operations

Phase Combination	1	2	3	4	5	6	7	8
EB Left	P	P			NB Left	P	P	
Thru		P			Thru		P	
Right		P			Right		P	
Peds					Peds			
WB Left	P	P			SB Left	P	P	
Thru		P			Thru		P	
Right		P			Right		P	
Peds					Peds			
NB Right					EB Right			
SB Right					WB Right			
Green	4.0	22.0				22.0	44.0	
Yellow	3.0	3.0				3.0	3.0	
All Red	1.0	1.0				1.0	1.0	

Cycle Length: 108.0 sec

Intersection Performance Summary

Appr/ Lane Grp	Lane Group Capacity	Adj Sat Flow Rate (s)	Ratios v/c	g/C	Lane Group Delay	LOS	Approach Delay	LOS
Eastbound								
L	185	1805	0.45	0.28	38.0	D		
T	735	3610	0.57	0.20	41.9	D	40.9	D
R	329	1615	0.34	0.20	39.5	D		
Westbound								
L	419	3502	0.73	0.28	49.7	D		
TR	660	3238	0.67	0.20	45.1	D	47.0	D
Northbound								
L	457	1805	0.12	0.65	5.5	A		
T	1471	3610	0.43	0.41	21.4	C	20.7	C
R	658	1615	0.42	0.41	22.3	C		
Southbound								
L	1023	3502	0.71	0.65	9.5	A		
T	1471	3610	0.76	0.41	27.9	C	20.7	C
R	658	1615	0.00	0.41	19.0	B		

Intersection Delay = 28.4 (sec/veh) Intersection LOS = C

HCS2000: Signalized Intersections Release 4.1c

Gdot
Gdot
#2 Capitol Square

Atlanta, Georgia 30334
Phone: Fax:
E-Mail:

OPERATIONAL ANALYSIS

Analyst: Scott M.
Agency/Co.:
Date Performed: 6/22/05
Analysis Time Period: pm
Intersection: Anvil Block Rd
Area Type: All other areas
Jurisdiction:
Analysis Year: 2032
Project ID:

East/West Street North/South Street

VOLUME DATA

	Eastbound			Westbound			Northbound			Southbound		
	L	T	R	L	T	R	L	T	R	L	T	R
Volume	75	375	150	275	125	325	50	575	300	650	1000	25
% Heavy Veh	0	0	0	0	0	0	0	0	0	0	0	0
PHF	0.90	0.90	0.90	0.90	0.90	0.90	0.90	0.90	0.90	0.90	0.90	0.90
PK 15 Vol	21	104	42	76	35	90	14	160	83	181	278	7
Hi Ln Vol												
% Grade		0			0			0			0	
Ideal Sat	1900	1900	1900	1900	1900		1900	1900	1900	1900	1900	1900
ParkExist												
NumPark												
No. Lanes	1	2	1	2	2	0	1	2	1	2	2	1
LGConfig	L	T	R	L	TR		L	T	R	L	T	R
Lane Width	12.0	12.0	12.0	12.0	12.0		12.0	12.0	12.0	12.0	12.0	12.0
RTOR Vol			50			50			50			25
Adj Flow	83	417	111	306	445		56	639	278	722	1111	0
%InSharedLn												
Prop LTs	1.000	0.000		1.000	0.000		1.000	0.000		1.000	0.000	
Prop RTs		0.000	1.000		0.688			0.000	1.000		0.000	1.000
Peds Bikes		0			0			0			0	
Buses	0	0	0	0	0		0	0	0	0	0	0
%InProtPhase	0.0			0.0			0.0			0.0		

Duration 0.25 Area Type: All other areas

OPERATING PARAMETERS

	Eastbound			Westbound			Northbound			Southbound		
	L	T	R	L	T	R	L	T	R	L	T	R
Init Unmet	0.0	0.0	0.0	0.0	0.0		0.0	0.0	0.0	0.0	0.0	0.0

Arriv. Type	4	4	4	4	4		4	4	4	4	4	4
Unit Ext.	3.0	3.0	3.0	3.0	3.0		3.0	3.0	3.0	3.0	3.0	3.0
I Factor		1.000			1.000			1.000			1.000	
Lost Time	2.0	2.0	2.0	2.0	2.0		2.0	2.0	2.0	2.0	2.0	2.0
Ext of g	2.0	2.0	2.0	2.0	2.0		2.0	2.0	2.0	2.0	2.0	2.0
Ped Min g		3.2			3.2			3.2			3.2	

PHASE DATA

Phase Combination		1	2	3	4			5	6	7	8
EB	Left	P	P			NB	Left	P	P		
	Thru		P				Thru		P		
	Right		P				Right		P		
	Peds						Peds				
WB	Left	P	P			SB	Left	P	P		
	Thru		P				Thru		P		
	Right		P				Right		P		
	Peds						Peds				
NB	Right					EB	Right				
SB	Right					WB	Right				
Green		4.0	22.0					22.0	44.0		
Yellow		3.0	3.0					3.0	3.0		
All Red		1.0	1.0					1.0	1.0		

Cycle Length: 108.0 se

VOLUME ADJUSTMENT AND SATURATION FLOW WORKSHEET

Volume Adjustment

	Eastbound			Westbound			Northbound			Southbound		
	L	T	R	L	T	R	L	T	R	L	T	R
Volume, V	75	375	150	275	125	325	50	575	300	650	1000	25
PHF	0.90	0.90	0.90	0.90	0.90	0.90	0.90	0.90	0.90	0.90	0.90	0.90
Adj flow	83	417	111	306	139	306	56	639	278	722	1111	0
No. Lanes	1	2	1	2	2	0	1	2	1	2	2	1
Lane group	L	T	R	L	TR		L	T	R	L	T	R
Adj flow	83	417	111	306	445		56	639	278	722	1111	0
Prop LTs	1.000	0.000		1.000	0.000		1.000	0.000		1.000	0.000	
Prop RTs	0.000	1.000		0.688			0.000	1.000		0.000	1.000	

Saturation Flow Rate (see Exhibit 16-7 to determine the adjustment factors)

	Eastbound			Westbound			Northbound			Southbound		
LG	L	T	R	L	TR		L	T	R	L	T	R
So	1900	1900	1900	1900	1900		1900	1900	1900	1900	1900	1900
Lanes	1	2	1	2	2	0	1	2	1	2	2	1
fW	1.000	1.000	1.000	1.000	1.000		1.000	1.000	1.000	1.000	1.000	1.00
fHV	1.000	1.000	1.000	1.000	1.000		1.000	1.000	1.000	1.000	1.000	1.00
fG	1.000	1.000	1.000	1.000	1.000		1.000	1.000	1.000	1.000	1.000	1.00
fP	1.000	1.000	1.000	1.000	1.000		1.000	1.000	1.000	1.000	1.000	1.00
fBB	1.000	1.000	1.000	1.000	1.000		1.000	1.000	1.000	1.000	1.000	1.00
fA	1.00	1.00	1.00	1.00	1.00		1.00	1.00	1.00	1.00	1.00	1.00
fLU	1.00	0.95	1.00	0.97	0.95		1.00	0.95	1.00	0.97	0.95	1.00

fRT		1.000	0.850		0.897		1.000	0.850		1.000	0.85
fLT	0.950	1.000		0.950	1.000	0.950	1.000		0.950	1.000	
Sec.	0.259			0.326		0.105			0.189		
fLpb	1.000	1.000		1.000	1.000	1.000	1.000		1.000	1.000	
fRpb		1.000	1.000		1.000		1.000	1.000		1.000	1.00
S	1805	3610	1615	3502	3238	1805	3610	1615	3502	3610	1615
Sec.	492			1201		200			698		

CAPACITY AND LOS WORKSHEET

Capacity Analysis and Lane Group Capacity

Appr/ Mvmt	Lane Group	Adj Flow Rate (v)	Adj Sat Flow Rate (s)	Flow Ratio (v/s)	Green Ratio (g/C)	--Lane Group-- Capacity (c)	v/c Ratio
Eastbound							
Prot		67	1805	0.04	0.037	67	1.00
Perm		16	492	0.03	0.241	118	0.14
Left	L	83			0.28	185	0.45
Prot							
Perm							
Thru	T	417	3610	0.12	0.20	735	0.57
Right	R	111	1615	0.07	0.20	329	0.34
Westbound							
Prot		130	3502	# 0.04	0.037	130	1.00
Perm		176	1201	# 0.15	0.241	289	0.61
Left	L	306			0.28	419	0.73
Prot							
Perm							
Thru	TR	445	3238	0.14	0.20	660	0.67
Right							
Northbound							
Prot		56	1805	0.03	0.204	368	0.15
Perm		0	200	0.00	0.444	89	0.00
Left	L	56			0.65	457	0.12
Prot							
Perm							
Thru	T	639	3610	0.18	0.41	1471	0.43
Right	R	278	1615	0.17	0.41	658	0.42
Southbound							
Prot		713	3502	# 0.20	0.204	713	1.00
Perm		9	698	0.01	0.444	310	0.03
Left	L	722			0.65	1023	0.71
Prot							
Perm							
Thru	T	1111	3610	# 0.31	0.41	1471	0.76
Right	R	0	1615	0.00	0.41	658	0.00

Sum of flow ratios for critical lane groups, Yc = Sum (v/s) = 0.70
Total lost time per cycle, L = 12.00 sec
Critical flow rate to capacity ratio, Xc = (Yc)(C)/(C-L) = 0.78

Control Delay and LOS Determination

Appr/ Lane Grp	Ratios v/c	g/C	Unf Del d1	Prog Adj Fact	Lane Grp Cap	Incremental Factor k	Del d2	Res Del d3	Lane Group Delay	LOS	Approach Delay	LOS
Eastbound												
L	0.45	0.28	30.3	1.000	185	0.50	7.7	0.0	38.0	D		
T	0.57	0.20	38.7	1.000	735	0.50	3.2	0.0	41.9	D	40.9	D

R	0.34	0.20	36.8	1.000	329	0.50	2.8	0.0	39.5	D		
Westbound												
L	0.73	0.28	39.0	1.000	419	0.50	10.7	0.0	49.7	D		
TR	0.67	0.20	39.7	1.000	660	0.50	5.4	0.0	45.1	D	47.0	D
Northbound												
L	0.12	0.65	11.1	0.444	457	0.50	0.5	0.0	5.5	A		
T	0.43	0.41	23.0	0.886	1471	0.50	0.9	0.0	21.4	C	20.7	C
R	0.42	0.41	22.9	0.886	658	0.50	2.0	0.0	22.3	C		
Southbound												
L	0.71	0.65	12.1	0.444	1023	0.50	4.1	0.0	9.5	A		
T	0.76	0.41	27.4	0.886	1471	0.50	3.7	0.0	27.9	C	20.7	C
R	0.00	0.41	19.0	1.000	658	0.50	0.0	0.0	19.0	B		

Intersection delay = 28.4 (sec/veh) Intersection LOS = C

SUPPLEMENTAL PERMITTED LT WORKSHEET
for exclusive lefts

Input

	EB	WB	NB	SB
Cycle length, C 108.0 sec				
Total actual green time for LT lane group, G (s)	30.0	30.0	70.0	70.
Effective permitted green time for LT lane group, g(s)	26.0	26.0	48.0	48.
Opposing effective green time, go (s)	22.0	22.0	44.0	44.
Number of lanes in LT lane group, N	1	2	1	2
Number of lanes in opposing approach, No	2	2	2	2
Adjusted LT flow rate, VLT (veh/h)	83	306	56	722
Proportion of LT in LT lane group, PLT	1.000	1.000	1.000	1.0
Proportion of LT in opposing flow, PLTo	0.00	0.00	0.00	0.0
Adjusted opposing flow rate, Vo (veh/h)	445	417	1111	639
Lost time for LT lane group, tL	4.00	4.00	4.00	4.0
Computation				
LT volume per cycle, LTC=VLTC/3600	2.49	9.18	1.68	21.
Opposing lane util. factor, fLUo	0.95	0.95	0.95	0.9
Opposing flow, Volc=VoC/[3600(No)fLUo] (veh/ln/cyc)	7.03	6.58	17.54	10.
gf=G[exp(- a * (LTC ** b))]-tl, gf<=g	0.0	0.0	0.0	0.0
Opposing platoon ratio, Rpo (refer Exhibit 16-11)	1.33	1.33	1.33	1.3
Opposing Queue Ratio, qro=Max[1-Rpo(go/C),0]	0.73	0.73	0.46	0.4
gq, (see Exhibit C16-4,5,6,7,8)	12.38	11.45	28.27	12.
gu=g-gq if gq>=gf, or = g-gf if gq<gf	13.62	14.55	19.73	35.
n=Max(gq-gf)/2,0)	6.19	5.73	14.14	6.1
PTHo=1-PLTo	1.00	1.00	1.00	1.0
PL*=PLT[1+(N-1)g/(gf+gu/EL1+4.24)]	1.00	3.24	1.00	3.5
EL1 (refer to Exhibit C16-3)	2.02	1.97	3.90	2.4
EL2=Max((1-Ptho**n)/Plto, 1.0)				
fmin=2(1+PL)/g or fmin=2(1+Pl)/g	0.15	0.33	0.08	0.1
gdiff=max(gq-gf,0)	0.00	0.00	0.00	0.0
fm=[gf/g]+[gu/g]/[1+PL(EL1-1)], (min=fmin;max=1.00)	0.26	0.33	0.11	0.1
flt=fm=[gf/g]+[gu/g]/[1+PL(EL1-1)]+[gdiff/g]/[1+PL(EL2-1)],(fmin<=fm<=1.00)				
or flt=[fm+0.91(N-1)]/N**				
Left-turn adjustment, fLT	0.259	0.326	0.105	0.1

For special case of single-lane approach opposed by multilane approach, see text.

* If Pl>=1 for shared left-turn lanes with N>1, then assume de-facto left-turn lane and redo calculations.

** For permitted left-turns with multiple exclusive left-turn lanes, flt=fm.
For special case of multilane approach opposed by single-lane approach
or when gf>gq, see text.

SUPPLEMENTAL PERMITTED LT WORKSHEET
for shared lefts

Input

	EB	WB	NB	SB
Cycle length, C 108.0 sec				
Total actual green time for LT lane group, G (s)				
Effective permitted green time for LT lane group, g(s)				
Opposing effective green time, go (s)				
Number of lanes in LT lane group, N				
Number of lanes in opposing approach, No				
Adjusted LT flow rate, VLT (veh/h)				
Proportion of LT in LT lane group, PLT	0.000	0.000	0.000	0.0
Proportion of LT in opposing flow, PLTo				
Adjusted opposing flow rate, Vo (veh/h)				
Lost time for LT lane group, tL				
Computation				
LT volume per cycle, LTC=VLTC/3600				
Opposing lane util. factor, fLUo	0.95	0.95	0.95	0.9
Opposing flow, Volc=VoC/[3600(No)fLUo] (veh/ln/cyc)				
gf=G[exp(- a * (LTC ** b))]-tl, gf<=g				
Opposing platoon ratio, Rpo (refer Exhibit 16-11)				
Opposing Queue Ratio, qro=Max[1-Rpo(go/C),0]				
gq, (see Exhibit C16-4,5,6,7,8)				
gu=g-gq if gq>=gf, or = g-gf if gq<gf				
n=Max(gq-gf)/2,0)				
PTHo=1-PLTo				
PL*=PLT[1+(N-1)g/(gf+gu/EL1+4.24)]				
EL1 (refer to Exhibit C16-3)				
EL2=Max((1-Ptho**n)/Plto, 1.0)				
fmin=2(1+PL)/g or fmin=2(1+Pl)/g				
gdiff=max(gq-gf,0)				
fm=[gf/g]+[gu/g]/[1+PL(EL1-1)], (min=fmin;max=1.00)				
flt=fm=[gf/g]+[gu/g]/[1+PL(EL1-1)]+[gdiff/g]/[1+PL(EL2-1)],(fmin<=fm<=1.00)				
or flt=[fm+0.91(N-1)]/N**				
Left-turn adjustment, fLT				

For special case of single-lane approach opposed by multilane approach,
see text.
* If Pl>=1 for shared left-turn lanes with N>1, then assume de-facto
  left-turn lane and redo calculations.
** For permitted left-turns with multiple exclusive left-turn lanes, flt=fm.
For special case of multilane approach opposed by single-lane approach
or when gf>gq, see text.

SUPPLEMENTAL PEDESTRIAN-BICYCLE EFFECTS WORKSHEET

Permitted Left Turns

	EB	WB	NB	SB
Effective pedestrian green time, gp (s)				
Conflicting pedestrian volume, Vped (p/h)				
Pedestrian flow rate, Vpedg (p/h)				
OCCpedg				
Opposing queue clearing green, gq (s)				
Eff. ped. green consumed by opp. veh. queue, gq/gp				
OCCpedu				

Opposing flow rate, Vo (veh/h)
OCCr
Number of cross-street receiving lanes, Nrec
Number of turning lanes, Nturn
ApbT
Proportion of left turns, PLT
Proportion of left turns using protected phase, PLTA
Left-turn adjustment, fLpb
Permitted Right Turns
Effective pedestrian green time, gp (s)
Conflicting pedestrian volume, Vped (p/h)
Conflicting bicycle volume, Vbic (bicycles/h)
Vpedg
OCCpedg
Effective green, g (s)
Vbicg
OCCbicg
OCCr
Number of cross-street receiving lanes, Nrec
Number of turning lanes, Nturn
ApbT
Proportion right-turns, PRT
Proportion right-turns using protected phase, PRTA
Right turn adjustment, fRpb

SUPPLEMENTAL UNIFORM DELAY WORKSHEET

	EBLT	WBLT	NBLT	SBLT
Cycle length, C 108.0 sec				
Adj. LT vol from Vol Adjustment Worksheet, v	83	306	56	722
v/c ratio from Capacity Worksheet, X	0.45	0.73	0.12	0.71
Protected phase effective green interval, g (s)	4.0	4.0	22.0	22.0
Opposing queue effective green interval, gq	12.38	11.45	28.27	12.2
Unopposed green interval, gu	13.62	14.55	19.73	35.7
Red time r=(C-g-gq-gu)	78.0	78.0	38.0	38.0
Arrival rate, qa=v/(3600(max[X,1.0]))	0.02	0.09	0.02	0.20
Protected ph. departure rate, Sp=s/3600	0.501	0.973	0.501	0.97
Permitted ph. departure rate, Ss=s(gq+gu)/(gu*3600)	0.26	0.60	0.14	0.26
XPerm	0.17	0.25	0.28	1.03
XProt	0.94	1.79	0.08	0.56
Case	1	2	1	3
Queue at beginning of green arrow, Qa	1.80	6.63	0.59	7.94
Queue at beginning of unsaturated green, Qu	0.29	5.56	0.44	2.46
Residual queue, Qr	0.00	3.08	0.00	0.32
Uniform Delay, d1	30.3	39.0	11.1	12.1

DELAY/LOS WORKSHEET WITH INITIAL QUEUE

Appr/ Lane Group	Initial Unmet Demand Q veh	Dur. Unmet Demand t hrs.	Uniform Delay Unadj. ds	Uniform Delay Adj. d1 sec	Initial Queue Param. u	Final Unmet Demand Q veh	Initial Queue Delay d3 sec	Lane Group Delay d sec
Eastbound								

Westbound

Northbound

Southbound

Intersection Delay 28.4 sec/veh Intersection LOS C

BACK OF QUEUE WORKSHEET

	Eastbound			Westbound			Northbound			Southbound		
LaneGroup	L	T	R	L	TR		L	T	R	L	T	R
Init Queue	0.0	0.0	0.0	0.0	0.0		0.0	0.0	0.0	0.0	0.0	0.0
Flow Rate	83	219	111	157	234		56	336	278	372	584	0
So	1900	1900	1900	1900	1900		1900	1900	1900	1900	1900	1900
No.Lanes	1	2	1	2	2	0	1	2	1	2	2	1
SL	1805	1900	1615	1805	1704		1805	1900	1615	1805	1900	1615
LnCapacity	185	386	329	215	347		457	774	658	527	774	658
Flow Ratio	0.05	0.12	0.07	0.09	0.14		0.03	0.18	0.17	0.21	0.31	0.00
v/c Ratio	0.45	0.57	0.34	0.73	0.67		0.12	0.43	0.42	0.71	0.75	0.00
Grn Ratio	0.28	0.20	0.20	0.28	0.20		0.65	0.41	0.41	0.65	0.41	0.41
I Factor		1.000			1.000			1.000			1.000	
AT or PVG	4	4	4	4	4		4	4	4	4	4	4
Pltn Ratio	1.33	1.33	1.33	1.33	1.33		1.33	1.33	1.33	1.33	1.33	1.00
PF2	0.89	0.96	0.94	0.90	0.97		0.39	0.83	0.83	0.42	0.90	1.00
Q1	1.6	5.7	2.7	3.1	6.3		0.2	6.0	4.9	1.9	13.6	0.0
kB	0.8	0.7	0.6	0.8	0.6		1.4	1.1	1.0	1.4	1.1	1.0
Q2	0.4	0.8	0.3	1.7	0.4		0.2	0.8	0.7	3.0	3.0	0.0
Q Average	2.0	6.5	3.0	4.9	6.6		0.4	6.8	5.6	4.9	16.5	0.0
Q Spacing	25.0	25.0	25.0	25.0	25.0		25.0	25.0	25.0	25.0	25.0	25.0
Q Storage	0	0	0	0	0		0	0	0	0	0	0
Q S Ratio												
70th Percentile Output:												
fB%	1.3	1.2	1.3	1.2	1.2		1.3	1.2	1.2	1.2	1.2	1.3
BOQ	2.5	8.0	3.7	6.1	8.1		0.6	8.4	7.0	6.1	19.9	0.0
QSRatio												
85th Percentile Output:												
fB%	1.6	1.5	1.6	1.5	1.5		1.7	1.5	1.5	1.5	1.4	1.7
BOQ	3.2	9.6	4.7	7.4	9.8		0.7	10.1	8.4	7.5	23.3	0.0
QSRatio												
90th Percentile Output:												
fB%	1.8	1.6	1.8	1.7	1.6		2.0	1.6	1.7	1.7	1.5	2.0
BOQ	3.6	10.6	5.3	8.3	10.8		0.9	11.1	9.4	8.3	25.1	0.0
QSRatio												
95th Percentile Output:												
fB%	2.3	1.9	2.2	2.0	1.9		2.5	1.9	1.9	2.0	1.6	2.6
BOQ	4.5	12.2	6.4	9.7	12.3		1.1	12.7	10.9	9.8	27.1	0.0
QSRatio												
98th Percentile Output:												

fB%	2.7	2.1	2.5	2.3	2.1		3.1	2.1	2.2	2.3	1.8	3.2
BOQ	5.4	13.7	7.5	11.1	13.9		1.3	14.2	12.3	11.2	29.0	0.0
QSRatio												

ERROR MESSAGES

No errors to report.

Minutes Of Meeting – Initial Concept Meeting
Tuesday, January 5, 2005

STP-037-2(54) Clayton County; P.I. No. 720815
BHP-037-2(55) Clayton County; P.I. No. 720817

Location: Area Engineers' office – 940 Virginia Avenue, Hapeville GA

Project Description: Widening & reconstruction of US 23/ SR 42 from Lake Harbin Road to a point south of Anvil Block Road.

The purpose of this Initial Concept Meeting was to bring together stakeholders involved in the project. Representatives from the Georgia Department of Transportation (GDOT), Clayton County Government, and the Atlanta Regional Commission (A.R.C.) were present. A sign-in sheet showing all attendees is attached to this document. The meeting began at about 10:15am at the Hapeville Area Office (District 7, Area 3).

Brad McManus welcomed everyone. He then spoke of the proposed State Route 42 widening, which is about 3.2 miles. The proposed Typical Section calls for a 4-lane divided highway with a 20' raised concrete median. Brad asked for everyone to introduce themselves to the group.

Brad Ehrman mentioned a new concept report was being done for this project because the original one was outdated. Brad cited the accident history at some intersections and that there was an existing ADT of 14,000. The 2010 projection was 16,500 and 26,500 in the year 2030. Brad said OEL would begin current traffic counts this month. He mentioned the existing roadway is 2 lanes and that the design speed for the new project would be 45mph. No vertical design data has been made available. The clear zone distance is 28'. Also, the bridge (bridge culvert) at Upton Creek would be included in the proposed project.

Mike Lankford asked about the existing railroad bridge at Ft. Gillem. Brad responded it would be removed and that GDOT had an approved permit from the US Army, but it has expired. A new permit will be needed.

Brad Ehrman said preliminary indications showed 8 residences and 8 commercial properties would be displaced. This, however, is pending the completion of the Environmental and Historical studies.

Wade Woodward spoke of the utilities present including the railroad bridge, power lines, gas lines, and water.

Scott MacLean asked about the LGPA. After the meeting, Road Design determined it had been signed on October 3, 2002.

Jeff Metarko requested that mast arm structures be used for the traffic signals on the project.

Brad Ehrman spoke of the project alternatives. One alternative was to widen to the west side; another, to widen the road symmetrically. Both would involve more right-of-way acquisitions. Brad mentioned an environmental analysis and a historical study would have to be completed prior to any decisions regarding the roadway location.

Nancy Petrie mentioned the church site with cemetery as potentially historical (near Chippewa Drive). Also, there is a church property just north of Anvil Block Road – this, however, may not be within the project limits. Nancy also mentioned she noted 3 streams: Tar Creek, Upton Creek, and a tributary of Upton Creek.

Brad Ehrman spoke about the Ft. Gillem property and how its boundary is classified as historic.

Brad McManus inquired about whether right-of-way, if needed, at Ft. Gillem would be categorized 4(f) due to being a federal property.

Brad Ehrman stated there were no preliminary indications of hazardous waste sites on the proposed project, but there were leaking UST's in an old report. These UST's are at the Rex Road and Ellenwood Road intersections.

Brad Ehrman mentioned upcoming projects in the vicinity. One milling/overlay maintenance project is slated for June '05.

Regan Hammond mentioned if the project called for sidewalks. Scott mentioned sidewalks were proposed along both sides of the roadway. Regan added there is an upcoming enhancement project on Lake Harbin Road from Maddox to State Route 42 (P.I. #0004500).

Jeff Metarko spoke of two upcoming projects on Mt. Zion Road from I-75 to Rex Road (these, however, do not affect the proposed SR 42 widening). He asked about ATMS items such as fiber optic cable, CCTV, and detection systems. He mentioned the County is using video detection instead of traffic loops for signalized intersections. Jeff asked about the signal warrants at SR 42 and Old Rex-Morrow Road. He also asked that a median opening be used at the fire station and appropriate flashers with warning signs.

Jeff Metarko mentioned the insufficient sight distance at Double Bridge Road and SR 42. He requested appropriate flashers with warning signs at the school as well. Jeff added the County had a Consultant doing a study to realign the school driveway with Lake Harbin Road and whether this could be included in the scope of the proposed project. There have been accidents reported in this vicinity, he said.

Jeff Metarko stated a very large residential development was planned for the Anvil Block Road / I-675 area. Also mentioned was the potential historic status of the Rainwater's

General Merchandise store located at the northeast corner of Rex Road and State Route 42.

Brad McManus spoke about the project schedule, which likely will be pushed back six months. Preliminary plans were likely to be completed by 2006.

Wade Woodard mentioned existing subsurface utilities as well as O/H utilities in the area of the proposed project.

Regan Hammond inquired about sidewalks, and Brad McManus said this project did include sidewalks on both sides of the roadway. She also asked about pedestrian amenities by the school, including crosswalks, sidewalks, and ped heads.

List of those present at the Initial Concept Meeting:

Brad McManus, GDOT Road Design
Scott MacLean, GDOT Road Design
Brad Ehrman, GDOT Road Design
Wade Woodard, GDOT District 7 Utilities
Jerry Milligan, GDOT R/W
Nancy Petrie, GDOT Environment/Location
Regan Hammond, Atlanta Regional Commission
Jeff Metarko, Clayton County Government
Mike Lankford, GDOT Area 3 Engineer

MINUTES OF MEETING: Concept Team Meeting
Date: September 26, 2005

Project: STP-037-2(54) P.I. 720815 Clayton County
Project: BHF-037-2(55) P.I. 720817 Clayton County

Location: Road Design Conference Room, Atlanta GA

Project Description: Widening & reconstruction of US 23/ SR 42 from Lake Harbin Road to a point south of Anvil Block Road.

The meeting got underway about 10:20am. A sign-in sheet was circulated.

Brad began the meeting by having everyone introduce themselves. He spoke briefly of the project. Topics included were the Atlanta Regional Commission project history, accident history, project termini, horizontal alignment, and the 45-mph design speed. He said there were no known wetlands along the project that would be impacted.

Brad asked Scott to talk about the project's history and timeline, which he did (see attached sheet for topics he discussed).

Andy talked about several new residential developments along Double Bridge Road, which will add significant traffic in that area.

Brad spoke of the *Typical Section* for the proposed roadway (4-lane divided with a 20' raised median, sidewalks and 16' urban shoulders). Access would be by permit. There are approx. 110 parcels along the project; there will be about 13 relocations. Proposed right-of-way width will vary. A bridge may be needed at Upton Creek but this would depend on the findings in the Hydraulic Study.

Scott asked Andy whether the County had any long-range plans for improving Rex Road. There was not. Andy mentioned Mt. Zion Blvd. would be an appropriate western termini point if Rex Road was to be improved under this project. Brad said he wasn't sure how far the Department's responsibility extended along side roads.

Nabil commented on storage lengths of turn bays, e.g., right turn storage on westbound Rex Road at State Route 42.

Andy discussed how the County plans to develop Forest Parkway / Ellenwood Road into an east-west connector. This corridor would stretch from the Old National Highway area in College Park, through Clayton County and continue into Henry County. Andy and Jeff asked whether consideration had been given to using a median on both Forest Parkway and Ellenwood Road as the approach the project. Also discussed was the likelihood of this east-west connector (which, in part, is State Route 331) being brought *on-system* by the Department.

Jeff asked whether a median opening was provided at the Clayton County Fire Station, located just south of Forest Parkway/Ellenwood Road. There will be.

Scott asked Andy whether the County had received any notice as to whether the existing Ellenwood Post Office would stay in its current location on State Route 42. He was unaware of plans to relocate it and build elsewhere.

Brad mentioned the construction cost of the project was estimated at $22 million. R/W is July 2006 and the scheduled Let date is 2010.

Jerry mentioned 18 to 24 months would be a good estimate for the 110 parcels of right-of-way to be acquired.

Scott mentioned Ft. Gillem is currently on the closure list by the B.R.A.C. Committee. He said both Norfolk-Southern Railway and the U.S. Army (who owns the railroad spur track bridge) had no objections to the bridge being permanently removed.

Scott mentioned that it was doubtful that Rainwater's General Merchandise store could avoid being severely impacted by the proposed project.

Jeff mentioned the existing driveway to R.T. Smith Elem School and how the County would like to see that aligned with Lake Harbin Road as part of this project. A *Traffic & Pedestrian Access Study* was presented to the Department, completed by the County's consultant. Jeff mentioned how this location is a documented safety issue.

Jeff asked whether Old Rex Morrow Road would have a traffic signal. Brad mentioned a signal warrant study would have to be done by the District office. Jeff said there was a proposed residential subdivision along the east side of State Route 42, directly across from Old Rex Morrow Road. Jeff mentioned he could possibly provide us with a Preliminary Plat of the development, which he estimated was 100 or more lots.

List of those present at the Concept Team Meeting:

Brad McManus, Georgia DOT Road Design
Scott MacLean, Georgia DOT Road Design
Nabil Raad, Georgia DOT Traffic Operations
Jerry Milligan, Georgia DOT Right Of Way
Andy Adams, Clayton County Transportation & Development
Jeff Metarko, Clayton County Transportation & Development

MINUTES OF MEETING: Public Information Open House
Date: January 12, 2006

Project: STP-037-2(54) P.I. 720815 Clayton County
Project: BHF-037-2(55) P.I. 720817 Clayton County

Location: The Rock Baptist Church on Hwy 42 in Rex, GA

Project Description: Widening & reconstruction of US 23/ SR 42 from Lake Harbin Road to a point south of Anvil Block Road.

The P.I.O.H. began promptly at 4pm. There were three (3) displays set up on easels for the public to view.

Property owners were able to view the displays, ask questions and comment on the proposed project.

Lisa Favors of the Office of Environment Location sent a transcript of the comments received; there were 73 citizens to attend the P.I.O.H. A court reporter was present.

The P.I.O.H. promptly ended at 7pm.

A bridge may be needed at Upton Creek depending upon the Hydraulic Study by GDOT.

In the two weeks following the P.I.O.H., the Area Engineers office had 2 citizens come by.

Jeff Metarko asked again whether Old Rex Morrow Road would have a traffic signal. Brad mentioned a signal warrant study would have to be done by the District office. Jeff said there was a proposed residential subdivision along the east side of State Route 42, directly across from Old Rex Morrow Road. The developer of the proposed subdivision was not in attendance.

List of those present at the P.I.O.H.

Brad McManus, **GDOT Road Design**
Scott MacLean, **GDOT Road Design**
Mike Davidson, **GDOT Road Design**
Tiffany Powers, **GDOT Road Design**
Andy Adams, **Clayton County Transportation**
Jeff Metarko, **Clayton County Transportation**
Kristina Nash, **Office of Environment / Location**
Jennifer Mathis, **Office of Environment / Location**
Debbie Gibby, **Office of Environment / Location**
Bruce Savage, **District R/W**
Sherry Phillips, **District R/W**
Marshall Troup, **District Planning & Programming**

Mike

DEPARTMENT OF TRANSPORTATION
STATE OF GEORGIA

INTERDEPARTMENT CORRESPONDENCE

FILE P. I. No. 720815 & 720817 **OFFICE** Environment/Location

DATE February 7, 2006

FROM Harvey D. Keepler, State Environmental/Location Engineer

TO DISTRIBUTION BELOW

SUBJECT Project STP-037-2(54) & BHF-037-2(55), Clayton County, Summary of Comments Received During the Public Comment Period – Widening of US 23/SR 42 and Bridge Over Upton Creek

COMMENT TOTALS:

A total of 73 people attended the Public Information Open House (PIOH) held for the subject project on January 12, 2006. From those attending, twenty three (23) comment forms and no verbal statements were received. Three (3) additional comments were received during the ten-day comment period following the meeting, for a total of twenty six (26) comments. They are summarized as follows:

No. Opposed	No. In Support	Uncommitted	Conditional
4	18	1	3

MAJOR CONCERNS:

Concerns were expressed regarding the absence of bike lanes along this corridor.
Concerns were expressed regarding the problems with drainage of run-off water.
Concerns were expressed regarding the need for traffic light at the intersection of SR 42 and Oak Circle.

OFFICIALS:

None were in attendance.

DISPOSITION OF COMMENTS:

The following offices are requested to respond to the comments listed:

Road Design	1, 3, *6, 8, 9, **10, 15, 16
Environmental	2, 4, 5, 7, 11 - 14, 17 – 26

*This comment may require coordination with the Office of Traffic Operations.
**This comment may require coordination with the Office of Planning.

Please email responses to these comments to Lisa Favors (lisa.favors@dot.state.ga.us) by February 28, 2006. All responses will be combined in one letter and sent out by this office.

Attached is a complete transcript of the comments received during the comment period and a copy of the PIOH handout.

If you have any questions about the comments, please call Lisa Favors at (404) 699-6883.

HDK/lf

Attachments

DISTRIBUTION:
Mike Davidson
Don Brown
Keith Golden
Bryant Poole
Joe Palladi, P.E.
Greg Hood

Department of Transportation

HAROLD E. LINNENKOHL
COMMISSIONER
(404) 656-5206

DAVID E. STUDSTILL, JR., P.E.
CHIEF ENGINEER
(404) 656-5277

State of Georgia
#2 Capitol Square, S.W.
Atlanta, Georgia 30334-1002

LARRY E. DENT
DEPUTY COMMISSIONER
(404) 656-5212

EARL L. MAHFUZ
TREASURER
(404) 656-5224

January 12, 2006

Thank you for attending the public information open house for STP-037-2(54) & BHF-037-2(55), P.I. Nos. 720815 & 720817, the proposed widening and reconstruction of SR 42 from just north of Lake Harbin Road to just south of Anvil Block Road and spanning of Upton Creek at SR 42. In this handout package you will find a project description, location map and comment card.

As you enter the room, you will notice displays of the proposed projects. Department of Transportation (DOT) representatives, who can be identified by the name tags they are wearing, are available to discuss the projects and answer your questions. Please take this opportunity to discuss the projects with a DOT representative. There will be no formal presentation.

A court reporter will be available for those persons who would like to make a verbal statement about the projects. You may also complete a comment card and deposit it into the box provided here or send in written comments about the projects until January 23, 2006. Written comments should be sent to Mr. Harvey D. Keepler, State Environmental/Location Engineer, Georgia Department of Transportation, 3993 Aviation Circle, Atlanta, Georgia 30336-1593. Comments can also be made via the web at ***www.dot.state.ga.us***. Click on **Public Outreach** from the list of Featured Links. All comments will be made a part of the projects records. We hope you will take advantage of one of these opportunities to let the Department know your view of the proposal.

The displays and plans will be available for review for ten days after the public information open house at the Georgia Department of Transportation Area Three office located at 940 Virginia Avenue, Hapeville, GA. A copy of all comments received will be available for public review at this same location and at the Office of Environment/Location, 3993 Aviation Circle, Atlanta, as soon as compilation is completed.

Again, thank you for attending this public information open house and for giving us your comments.

Sincerely,

Buddy Gratton

Buddy Gratton, P.E.
Director of Preconstruction

BG/lf

Attachments

Project Description

STP-037-2(54) and BHF-037-2(55)
Clayton
P.I. # 720815 & 720817

Project STP-037-2(54) consists of the widening and reconstruction of SR 42 beginning at mile marker 1.9 just north of Lake Harbin Road and ending just south of the Anvil Block Road intersection at mile marker 5.1. The existing roadway is a two-lane facility with 12-ft travel lanes with variable width grassed shoulders. The proposed project would widen the existing facility to four 12-ft travel lanes with two lanes in each direction, with a 20-ft raised median, and 16-ft urban shoulders. The abandoned railroad bridge over SR 42 that was used to serve Fort Gillem would be removed. The existing bridge culverts at Tar Creek and Upton Creek would be extended to the width of the proposed widening. Project BHF-037-2(55) is the spanning of Upton Creek where it intersects SR 42. The existing double 10 x 12-ft bridge culvert would be spanned to accommodate the proposed widening.

The widening would begin north of Lake Harbin Road with symmetrical widening until a point just north of the intersection of Rex Road/CR 29. At this point, the widening would shift to the east side of the existing roadway and extend on that side until it reaches Upton Creek. At Upton Creek widening would continue on the west side of SR 42 until it reaches Southaven Road. From this point, the widening would become symmetrical for the remainder of the project.

Several intersections would be slightly realigned to tie into SR 42 at standard skew angles. They are Rex Road, Old Rex Morrow Road, Forest Parkway/Ellenwood Road, Farn Drive and Old Tony Road.

The existing right-of-way on SR 42 is 80 feet in width. The proposed widening would require 100 to 150 feet of right-of-way for implementation. The length of the proposed project is approximately 3.2 miles and lies entirely within unincorporated Clayton County.

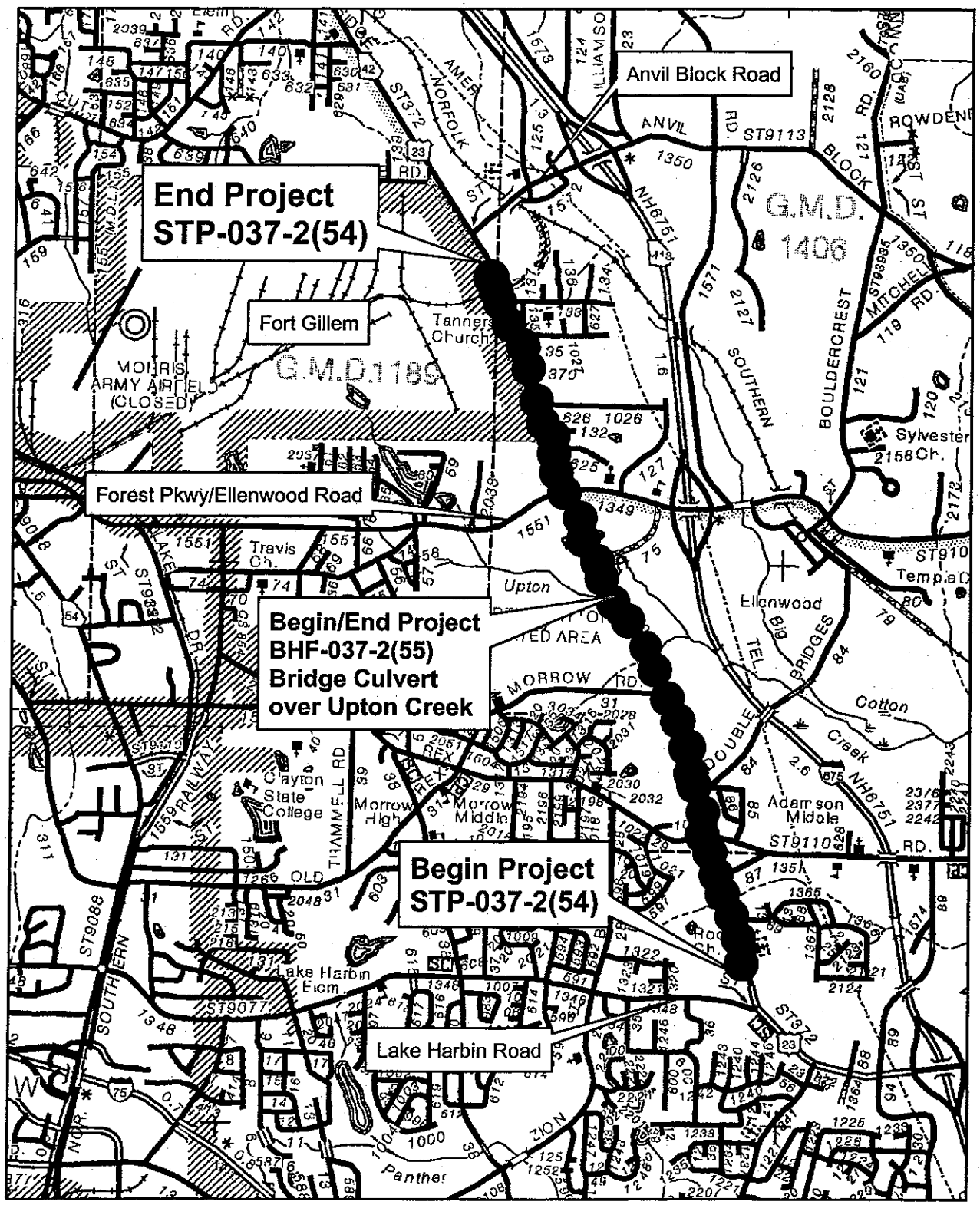

Project Location Map
STP-037-2(54) & BHF-037-2(55)
Clayton County
P.I. No. 720815 & 720817

N

Georgia Department of Transportation

Public Information Open House Comment Card

Projects STP-037-2(54) & BHF-037-2(55), Clayton County, P.I. Nos. 720815 & 720817

Please print responses.

Name _____

Address _____

_____

_____

Do you support the project? ☐ *For* ☐ *Against* ☐ *Conditional* ☐ *Uncommitted*

Comments _____

_____

_____

_____

_____

How did you hear about this meeting? ☐ *Radio* ☐ *Newspaper* ☐ *Signs* ☐ *Word of Mouth*

Was the location of the meeting convenient for you to attend? ☐ Yes ☐ No

If no, please suggest a general location that is more convenient to your community.

_____

Was the time of the meeting convenient for you to attend? ☐ Yes ☐ No

If no, please suggest a time frame that is more convenient for you. _____

Were your questions answered by the DOT personnel? ☐ Yes ☐ No

Do you understand the project after attending this meeting? ☐ Yes ☐ No

Please share your suggestions on improving the way Georgia DOT conducts public meetings?

_____

_____

_____

_____

Mail To:

Mr. Harvey D. Keepler, State Environmental/Location Engineer
Georgia Department of Transportation
3993 Aviation Circle
Atlanta, GA 30336-1593

Georgia Department of Transportation

Public Information Open House Comment Card

Projects STP-037-2(54) & BHF-037-2(55), Clayton County, P.I. Nos. 720815 & 720817

Please print responses.

Name Mary G Patterson

Address 6203 Crow Ct. Rex Ga 30273

Do you support the project? ☐ *For* ☑ *Against* ☐ *Conditional* ☐ *Uncommitted*

Comments What impact will this have on the water that was in my yard. The plat final not shown

How did you hear about this meeting? ☐ *Radio* ☐ *Newspaper* ☑ *Signs* ☐ *Word of Mouth*

Was the location of the meeting convenient for you to attend? ☑ Yes ☐ No

If no, please suggest a general location that is more convenient to your community.

Was the time of the meeting convenient for you to attend? ☑ Yes ☐ No

If no, please suggest a time frame that is more convenient for you.

Were your questions answered by the DOT personnel? ☐ Yes ☐ No

Do you understand the project after attending this meeting? ☐ Yes ☐ No

Please share your suggestions on improving the way Georgia DOT conducts public meetings?

Mail To:

Mr. Harvey D. Keepler, State Environmental/Location Engineer
Georgia Department of Transportation
3993 Aviation Circle
Atlanta, GA 30336-1593

2

Georgia Department of Transportation

Public Information Open House Comment Card

Projects STP-037-2(54) & BHF-037-2(55), Clayton County,

P.I. Nos. 720815 & 720817

Please print responses.

Name WAYNE FIELDER

Address P.O. BOX 792
REX, GA. 30273-0792
770-960-0700

Do you support the project? ☐ *For* ☒ *Against* ☐ *Conditional* ☐ *Uncommitted*

Comments HAVENT WE ALREADY DESTROYED ENOUGH NATURE. WHEN IS IT GOING TO STOP. WE NEED TO LEARN TO LIVE WITH NATURE, NOT DESTROY IT. GOD WILL TAKE HIS EARTH BACK. DO YA'LL NOT UNDERSTAND THIS

How did you hear about this meeting? ☐ *Radio* ☐ *Newspaper* ☒ *Signs* ☐ *Word of Mouth*

Was the location of the meeting convenient for you to attend? ☒ Yes ☐ No

If no, please suggest a general location that is more convenient to your community.

Was the time of the meeting convenient for you to attend? ☒ Yes ☐ No

If no, please suggest a time frame that is more convenient for you.

Were your questions answered by the DOT personnel? ☒ Yes ☐ No

Do you understand the project after attending this meeting? ☒ Yes ☐ No

Please share your suggestions on improving the way Georgia DOT conducts public meetings?

LEAVE THIS PROJECT ALONE - LEAVE US ALONE. TALK YOUR GREEDY LOVING PEOPLE + BOTHER SOMEBODY ELSE.

Mail To:

Mr. Harvey D. Keepler, State Environmental/Location Engineer
Georgia Department of Transportation
3993 Aviation Circle
Atlanta, GA 30336-1593

3

Rex Nursery
P.O. Box 545
Rex, Georgia 30273

Tel. 961-6790

FAX 961-9003

January 18, 2006

Harvey K Keepler
State Environmental/Location Engineer
Georgia Department of Transportation
3993 Aviation Circle
Atlanta Ga.30336-1593

Reference: Proposed widening of STATE ROAD 42 STARTING AT LAKE HARBIN ROAD NORTH IN FRONT OF REX NURSERY.

INGRESS-EGRESS:

Because we have daily deliveries of merchandise on 18 wheel tractor-trailers, we have to have two median cuts whereby these trucks can enter from north or southbound lanes and exit to north or southbound lanes since there will not be room for these trucks to turn around. At present trucks can enter and exit with ease because we have two driveways, approximately 550 feet apart, from which trucks can come and go.

WATER RUNOFF:

After previous widening at intersection of Highway 42 and Lake Harbin Rd runoff water was increased causing damage to residence and flooding property despite the much larger culvert that **WE** installed at the recommendation of D O T engineer.
Flooding also occurs at housing development adjoining our property , on North boundary, due to runoff..

Due to the amount of right of way and easement DOTproposes to acquire, our business will be damaged irreparably.
If you have any questions please call us for clarification.

Yours truly
Helenne B Garber
Helenne B. Garber

4

Georgia Department of Transportation

Public Information Open House Comment Card

Projects STP-037-2(54) & BHF-037-2(55), Clayton County, P.I. Nos. 720815 & 720817

Please print responses.

Name Kevin Durr

Address 3403 Rock Creek Dr.
Rex 30273

Do you support the project? ☐ *For* ☑ *Against* ☐ *Conditional* ☐ *Uncommitted*

Comments

How did you hear about this meeting? ☐ *Radio* ☐ *Newspaper* ☑ *Signs* ☐ *Word of Mouth*

Was the location of the meeting convenient for you to attend? ☑ Yes ☐ No

If no, please suggest a general location that is more convenient to your community.

Was the time of the meeting convenient for you to attend? ☑ Yes ☐ No

If no, please suggest a time frame that is more convenient for you.

Were your questions answered by the DOT personnel? ☑ Yes ☐ No

Do you understand the project after attending this meeting? ☑ Yes ☐ No

Please share your suggestions on improving the way Georgia DOT conducts public meetings?

Mail To:
Mr. Harvey D. Keepler, State Environmental/Location Engineer
Georgia Department of Transportation
3993 Aviation Circle
Atlanta, GA 30336-1593

5

Georgia Department of Transportation

Public Information Open House Comment Card

Projects STP-037-2(54) & BHF-037-2(55), Clayton County,

P.I. Nos. 720815 & 720817

Please print responses.

Name Lottie Cooley

Address 6199 Hwy 42
Rex Ga
30273

Do you support the project? ☐ *For* ☐ *Against* ☐ *Conditional* ☑ *Uncommitted*

Comments

How did you hear about this meeting? ☐ *Radio* ☐ *Newspaper* ☑ *Signs* ☐ *Word of Mouth*

Was the location of the meeting convenient for you to attend? ☑ Yes ☐ No

If no, please suggest a general location that is more convenient to your community.

Was the time of the meeting convenient for you to attend? ☑ Yes ☐ No

If no, please suggest a time frame that is more convenient for you.

Were your questions answered by the DOT personnel? ☑ Yes ☐ No

Do you understand the project after attending this meeting? ☑ Yes ☐ No

Please share your suggestions on improving the way Georgia DOT conducts public meetings?

Mail To:
Mr. Harvey D. Keepler, State Environmental/Location Engineer
Georgia Department of Transportation
3993 Aviation Circle
Atlanta, GA 30336-1593

Georgia Department of Transportation

6

Public Information Open House Comment Card

Projects STP-037-2(54) & BHF-037-2(55), Clayton County,

P.I. Nos. 720815 & 720817

Please print responses.

Name Nora L Hardy

Address 2510 Oak Circle
Ellenwood Ga 30294

Do you support the project? ☐ *For* ☐ *Against* ☒ *Conditional* ☐ *Uncommitted*

Comments The project is fine with me + some of my neighbors on Oak Circle + Old Tony Rd. We would like to have a traffic light place there at the end of Oak Circle. to operate during the ~~business~~ peak hours; 3 hrs morning rush & 3 hr. evening rush. ~~These~~ during these hours it is hard for us to enter Hwy - 42 6:00Am — 8:00Am 4:30Pm — 7:30 Please consider these hour.

How did you hear about this meeting? ☐ *Radio* ☐ *Newspaper* ☒ *Signs* ☐ *Word of Mouth*

There is a Church Zion Grove Baptist Church on Old Tony Rd. The light will help member to get there + exit better.

Was the location of the meeting convenient for you to attend? ☒ Yes ☐ No

If no, please suggest a general location that is more convenient to your community.

Was the time of the meeting convenient for you to attend? ☒ Yes ☐ No

If no, please suggest a time frame that is more convenient for you. _____

Were your questions answered by the DOT personnel? ☒ Yes ☐ No

Do you understand the project after attending this meeting? ☒ Yes ☐ No

Please share your suggestions on improving the way Georgia DOT conducts public meetings?

The public meeting was conducted well. If given a count from 1 to 5. I'll give it a 4 plus.

Mail To:

Mr. Harvey D. Keepler, State Environmental/Location Engineer
Georgia Department of Transportation
3993 Aviation Circle
Atlanta, GA 30336-1593

7

Georgia Department of Transportation

Public Information Open House Comment Card

Projects STP-037-2(54) & BHF-037-2(55), Clayton County, P.I. Nos. 720815 & 720817

Please print responses.

Name FRED DAWSON

Address 4621 Mitchells Ridge DRIVE

Do you support the project? ☐ *For* ☐ *Against* ☑ *Conditional* ☐ *Uncommitted*

Comments Due to the large Popolatongrowth, Hwy 42 should be widened to Acomodate new homes & subdivisions

How did you hear about this meeting? ☐ *Radio* ☐ *Newspaper* ☑ *Signs* ☐ *Word of Mouth*

Was the location of the meeting convenient for you to attend? ☑ Yes ☐ No

If no, please suggest a general location that is more convenient to your community.

Was the time of the meeting convenient for you to attend? ☑ Yes ☐ No

If no, please suggest a time frame that is more convenient for you.

Were your questions answered by the DOT personnel? ☑ Yes ☐ No

Do you understand the project after attending this meeting? ☑ Yes ☐ No

Please share your suggestions on improving the way Georgia DOT conducts public meetings?

Mail To:

Mr. Harvey D. Keepler, State Environmental/Location Engineer
Georgia Department of Transportation
3993 Aviation Circle
Atlanta, GA 30336-1593

8

Georgia Department of Transportation

Public Information Open House Comment Card

Projects STP-037-2(54) & BHF-037-2(55), Clayton County,

P.I. Nos. 720815 & 720817

Please print responses.

Name Don Schafer (S.E. Inc)

Address 5340 Hwy 42

Ellenwood GA 30294

Do you support the project? ☑ *For* ☐ *Against* ☐ *Conditional* ☐ *Uncommitted*

Comments Absolutely, provided we are able to maintain access to our property (Preferably by extending EAST Clayton Road thru to Forest Parkway from 42 Hwy)

How did you hear about this meeting? ☐ *Radio* ☐ *Newspaper* ☑ *Signs* ☐ *Word of Mouth*

Was the location of the meeting convenient for you to attend? ☑ Yes ☐ No

If no, please suggest a general location that is more convenient to your community.

Was the time of the meeting convenient for you to attend? ☑ Yes ☐ No

If no, please suggest a time frame that is more convenient for you.

Were your questions answered by the DOT personnel? ☑ Yes ☐ No

Do you understand the project after attending this meeting? ☑ Yes ☐ No

Please share your suggestions on improving the way Georgia DOT conducts public meetings?

The way this meeting was handled worked fine.

Mail To:

Mr. Harvey D. Keepler, State Environmental/Location Engineer
Georgia Department of Transportation
3993 Aviation Circle
Atlanta, GA 30336-1593

9

Georgia Department of Transportation

Public Information Open House Comment Card

Projects STP-037-2(54) & BHF-037-2(55), Clayton County,

P.I. Nos. 720815 & 720817

Please print responses.

Name RAHN ROBINSON

Address 2785 OLD FIELD RD.
ELLENWOOD, GA 30294

Do you support the project? ☑ *For* ☐ *Against* ☐ *Conditional* ☐ *Uncommitted*

Comments MY ONLY CONCERN IS THE ABSENCE OF BICYCLE PATH. BIKE LANES SHOULD BE ADDED WITH ANY NEW ROAD CONSTRUCTION OR IMPROVEMENTS

How did you hear about this meeting? ☐ *Radio* ☐ *Newspaper* ☑ *Signs* ☐ *Word of Mouth*

Was the location of the meeting convenient for you to attend? ☑ Yes ☐ No

If no, please suggest a general location that is more convenient to your community.

Was the time of the meeting convenient for you to attend? ☑ Yes ☐ No

If no, please suggest a time frame that is more convenient for you.

Were your questions answered by the DOT personnel? ☑ Yes ☐ No

Do you understand the project after attending this meeting? ☑ Yes ☐ No

Please share your suggestions on improving the way Georgia DOT conducts public meetings?

Mail To:

Mr. Harvey D. Keepler, State Environmental/Location Engineer
Georgia Department of Transportation
3993 Aviation Circle
Atlanta, GA 30336-1593

10

Georgia Department of Transportation

Public Information Open House Comment Card

Projects STP-037-2(54) & BHF-037-2(55), Clayton County,

P.I. Nos. 720815 & 720817

Please print responses.

Name Andrew C. Adams

Address 8171 Dawn Dr

Jonesboro, GA 30236

Do you support the project? ☒ *For* ☐ *Against* ☐ *Conditional* ☐ *Uncommitted*

Comments ① The driveway to Smith Elementary School should be realigned to align with Lake Harbin Rd ② Since Ft Gilliam is closing and the area will most likely be redeveloped as mixed use, the RR bridge must be replaced to maintain industrial development opportunities.

How did you hear about this meeting? ☐ *Radio* ☐ *Newspaper* ☒ *Signs* ☐ *Word of Mouth*

Was the location of the meeting convenient for you to attend? ☒ Yes ☐ No

If no, please suggest a general location that is more convenient to your community.

Was the time of the meeting convenient for you to attend? ☒ Yes ☐ No

If no, please suggest a time frame that is more convenient for you.

Were your questions answered by the DOT personnel? ☒ Yes ☐ No

Do you understand the project after attending this meeting? ☒ Yes ☐ No

Please share your suggestions on improving the way Georgia DOT conducts public meetings?

Mail To:

Mr. Harvey D. Keepler, State Environmental/Location Engineer
Georgia Department of Transportation
3993 Aviation Circle
Atlanta, GA 30336-1593

17

Georgia Department of Transportation

Public Information Open House Comment Card

Projects STP-037-2(54) & BHF-037-2(55), Clayton County,

P.I. Nos. 720815 & 720817

Please print responses.

Name Dana Holston

Address 2941 Stone Creek Dr.
Rex, Ga 30273

Do you support the project? [✓] *For* [ ] *Against* [ ] *Conditional* [ ] *Uncommitted*

Comments

How did you hear about this meeting? [ ] *Radio* [ ] *Newspaper* [✓] *Signs* [ ] *Word of Mouth*

Was the location of the meeting convenient for you to attend? [✓] Yes [ ] No

If no, please suggest a general location that is more convenient to your community.

Was the time of the meeting convenient for you to attend? [✓] Yes [ ] No

If no, please suggest a time frame that is more convenient for you.

Were your questions answered by the DOT personnel? [✓] Yes [ ] No

Do you understand the project after attending this meeting? [✓] Yes [ ] No

Please share your suggestions on improving the way Georgia DOT conducts public meetings?

Mail To:
Mr. Harvey D. Keepler, State Environmental/Location Engineer
Georgia Department of Transportation
3993 Aviation Circle
Atlanta, GA 30336-1593

12

Georgia Department of Transportation

Public Information Open House Comment Card

Projects STP-037-2(54) & BHF-037-2(55), Clayton County, P.I. Nos. 720815 & 720817

Please print responses.

Name Dorothy B. Thomas

Address 5252 Boulderoxest Rd
Ellenwood Ga 30294

Do you support the project? ☒ *For* ☐ *Against* ☐ *Conditional* ☐ *Uncommitted*

Comments

How did you hear about this meeting? ☐ *Radio* ☐ *Newspaper* ☒ *Signs* ☐ *Word of Mouth*

Was the location of the meeting convenient for you to attend? ☒ Yes ☐ No

If no, please suggest a general location that is more convenient to your community.

Was the time of the meeting convenient for you to attend? ☒ Yes ☐ No

If no, please suggest a time frame that is more convenient for you.

Were your questions answered by the DOT personnel? ☒ Yes ☐ No

Do you understand the project after attending this meeting? ☒ Yes ☐ No

Please share your suggestions on improving the way Georgia DOT conducts public meetings?

Mail To:
Mr. Harvey D. Keepler, State Environmental/Location Engineer
Georgia Department of Transportation
3993 Aviation Circle
Atlanta, GA 30336-1593

13

Georgia Department of Transportation

Public Information Open House Comment Card

Projects STP-037-2(54) & BHF-037-2(55), Clayton County,

P.I. Nos. 720815 & 720817

Please print responses.

Name Martha L. Kemp

Address 2-Daniel Dr.

(Clayton City Side) Stockbridge, Ga. 30281

Do you support the project? ☒ *For* ☐ *Against* ☐ *Conditional* ☐ *Uncommitted*

Comments

How did you hear about this meeting? ☐ *Radio* ☐ *Newspaper* ☒ *Signs* ☐ *Word of Mouth*

Was the location of the meeting convenient for you to attend? ☒ Yes ☐ No

If no, please suggest a general location that is more convenient to your community.

Was the time of the meeting convenient for you to attend? ☒ Yes ☐ No

If no, please suggest a time frame that is more convenient for you.

Were your questions answered by the DOT personnel? ☒ Yes ☐ No

Do you understand the project after attending this meeting? ☒ Yes ☐ No

Please share your suggestions on improving the way Georgia DOT conducts public meetings?

Mail To:

Mr. Harvey D. Keepler, State Environmental/Location Engineer
Georgia Department of Transportation
3993 Aviation Circle
Atlanta, GA 30336-1593

14

Georgia Department of Transportation

Public Information Open House Comment Card

Projects STP-037-2(54) & BHF-037-2(55), Clayton County,

P.I. Nos. 720815 & 720817

Please print responses.

Name Mr. & Mrs. J. E. Wilkerson

Address 2676 Farn Dr.
Ellenwood GA.
30294

Do you support the project? ☒ *For* ☐ *Against* ☐ *Conditional* ☐ *Uncommitted*

Comments IF The price is Right

How did you hear about this meeting? ☐ *Radio* ☐ *Newspaper* ☒ *Signs* ☐ *Word of Mouth*

Was the location of the meeting convenient for you to attend? ☒ Yes ☐ No

If no, please suggest a general location that is more convenient to your community.

Was the time of the meeting convenient for you to attend? ☒ Yes ☐ No

If no, please suggest a time frame that is more convenient for you.

Were your questions answered by the DOT personnel? ☒ Yes ☐ No

Do you understand the project after attending this meeting? ☒ Yes ☐ No

Please share your suggestions on improving the way Georgia DOT conducts public meetings?

Mail To:
Mr. Harvey D. Keepler, State Environmental/Location Engineer
Georgia Department of Transportation
3993 Aviation Circle
Atlanta, GA 30336-1593

15

Georgia Department of Transportation

Public Information Open House Comment Card

Projects STP-037-2(54) & BHF-037-2(55), Clayton County,

P.I. Nos. 720815 & 720817

Please print responses.

Name Norman Grizzell

Address 388 Avian Forest Dr.
Stockbridge GA 30281

Do you support the project? ☒ *For* ☐ *Against* ☐ *Conditional* ☐ *Uncommitted*

Comments

please save Rainwater's Store at Rex Rd & Hwy. 42!

How did you hear about this meeting? ☐ *Radio* ☐ *Newspaper* ☒ *Signs* ☐ *Word of Mouth*

Was the location of the meeting convenient for you to attend? ☒ Yes ☐ No

If no, please suggest a general location that is more convenient to your community.

Was the time of the meeting convenient for you to attend? ☒ Yes ☐ No

If no, please suggest a time frame that is more convenient for you.

Were your questions answered by the DOT personnel? ☒ Yes ☐ No

Do you understand the project after attending this meeting? ☒ Yes ☐ No

Please share your suggestions on improving the way Georgia DOT conducts public meetings?

Mail To:

Mr. Harvey D. Keepler, State Environmental/Location Engineer
Georgia Department of Transportation
3993 Aviation Circle
Atlanta, GA 30336-1593

16

Georgia Department of Transportation

Public Information Open House Comment Card

Projects STP-037-2(54) & BHF-037-2(55), Clayton County,

P.I. Nos. 720815 & 720817

Please print responses.

Name THOMAS LEE

Address 3670 ASHBILL COURT
REX GA
30273

Do you support the project? ☒ *For* ☐ *Against* ☐ *Conditional* ☐ *Uncommitted*

Comments

THE PROJECT IS LONG OVERDUE AND A WELCOME IMPROVEMENT. THE REALIGNMENT OF INTERSECTION REX RD & HWY 42 WILL IMPROVE SIGHT LINES AND REX RD LANE ALIGNMENT. HOWEVER - I AM CONCERNED ABOUT THE POSSIBLE LOSS OF RAIN WATER GENERAL STORE STONE BUILDING.

How did you hear about this meeting? ☐ *Radio* ☐ *Newspaper* ☒ *Signs* ☐ *Word of Mouth*

Was the location of the meeting convenient for you to attend? ☒ Yes ☐ No

If no, please suggest a general location that is more convenient to your community.

Was the time of the meeting convenient for you to attend? ☒ Yes ☐ No

If no, please suggest a time frame that is more convenient for you.

Were your questions answered by the DOT personnel? ☒ Yes ☐ No

Do you understand the project after attending this meeting? ☒ Yes ☐ No

Please share your suggestions on improving the way Georgia DOT conducts public meetings?

Mail To:

Mr. Harvey D. Keepler, State Environmental/Location Engineer
Georgia Department of Transportation
3993 Aviation Circle
Atlanta, GA 30336-1593

17

Georgia Department of Transportation

Public Information Open House Comment Card

Projects STP-037-2(54) & BHF-037-2(55), Clayton County,

P.I. Nos. 720815 & 720817

Please print responses.

Name Beverly A. Berkeley

Address 1869 Owens Trail
Rev, GA. 30273

Do you support the project? ☒ *For* ☐ *Against* ☐ *Conditional* ☐ *Uncommitted*

Comments

How did you hear about this meeting? ☐ *Radio* ☐ *Newspaper* ☒ *Signs* ☐ *Word of Mouth*

Was the location of the meeting convenient for you to attend? ☒ Yes ☐ No

If no, please suggest a general location that is more convenient to your community.

Was the time of the meeting convenient for you to attend? ☒ Yes ☐ No

If no, please suggest a time frame that is more convenient for you.

Were your questions answered by the DOT personnel? ☒ Yes ☐ No

Do you understand the project after attending this meeting? ☒ Yes ☐ No

Please share your suggestions on improving the way Georgia DOT conducts public meetings?

Mail To:

Mr. Harvey D. Keepler, State Environmental/Location Engineer
Georgia Department of Transportation
3993 Aviation Circle
Atlanta, GA 30336-1593

18

Georgia Department of Transportation

Public Information Open House Comment Card

Projects STP-037-2(54) & BHF-037-2(55), Clayton County,

P.I. Nos. 720815 & 720817

Please print responses.

Name Brenda Sellers

Address 5252 Boulder crest Rd

Ellenwood Ga 30294

Do you support the project? [X] *For* [ ] *Against* [ ] *Conditional* [ ] *Uncommitted*

Comments

How did you hear about this meeting? [ ] *Radio* [ ] *Newspaper* [X] *Signs* [ ] *Word of Mouth*

Was the location of the meeting convenient for you to attend? [X] Yes [ ] No

If no, please suggest a general location that is more convenient to your community.

Was the time of the meeting convenient for you to attend? [X] Yes [ ] No

If no, please suggest a time frame that is more convenient for you.

Were your questions answered by the DOT personnel? [X] Yes [ ] No

Do you understand the project after attending this meeting? [X] Yes [ ] No

Please share your suggestions on improving the way Georgia DOT conducts public meetings?

Mail To:

Mr. Harvey D. Keepler, State Environmental/Location Engineer
Georgia Department of Transportation
3993 Aviation Circle
Atlanta, GA 30336-1593

19

Georgia Department of Transportation

Public Information Open House Comment Card

Projects STP-037-2(54) & BHF-037-2(55), Clayton County,

P.I. Nos. 720815 & 720817

Please print responses.

Name YVONNE ABRAHAM

Address 5744 PECAN GROVE
ELLENWOOD, GA 30294

Do you support the project? ☑ *For* ☐ *Against* ☐ *Conditional* ☐ *Uncommitted*

Comments IT WILL HELP TRAFFIC WITH ALL THE NEW SUB-DIVISIONS THAT ARE COING UP NOW.

How did you hear about this meeting? ☐ *Radio* ☐ *Newspaper* ☑ *Signs* ☐ *Word of Mouth*

Was the location of the meeting convenient for you to attend? ☑ Yes ☐ No

If no, please suggest a general location that is more convenient to your community.

Was the time of the meeting convenient for you to attend? ☑ Yes ☐ No

If no, please suggest a time frame that is more convenient for you.

Were your questions answered by the DOT personnel? ☑ Yes ☐ No

Do you understand the project after attending this meeting? ☑ Yes ☐ No

Please share your suggestions on improving the way Georgia DOT conducts public meetings?

N/A

Mail To:

Mr. Harvey D. Keepler, State Environmental/Location Engineer
Georgia Department of Transportation
3993 Aviation Circle
Atlanta, GA 30336-1593

20

Georgia Department of Transportation

Public Information Open House Comment Card

Projects STP-037-2(54) & BHF-037-2(55), Clayton County,

P.I. Nos. 720815 & 720817

Please print responses.

Name Lisa Smith

Address 6166 STONE CREEK LANE
REX, GA 30273

Do you support the project? ☑ *For* ☐ *Against* ☐ *Conditional* ☐ *Uncommitted*

Comments

How did you hear about this meeting? ☐ *Radio* ☐ *Newspaper* ☑ *Signs* ☐ *Word of Mouth*

Was the location of the meeting convenient for you to attend? ☑ Yes ☐ No

If no, please suggest a general location that is more convenient to your community.

Was the time of the meeting convenient for you to attend? ☑ Yes ☐ No

If no, please suggest a time frame that is more convenient for you.

Were your questions answered by the DOT personnel? ☑ Yes ☐ No

Do you understand the project after attending this meeting? ☑ Yes ☐ No

Please share your suggestions on improving the way Georgia DOT conducts public meetings?

Mail To:

Mr. Harvey D. Keepler, State Environmental/Location Engineer
Georgia Department of Transportation
3993 Aviation Circle
Atlanta, GA 30336-1593

21

Georgia Department of Transportation

Public Information Open House Comment Card

Projects STP-037-2(54) & BHF-037-2(55), Clayton County,

P.I. Nos. 720815 & 720817

Please print responses.

Name Mr & Mrs. W. A. Niblett

Address 5379 Hwy 42
Ellenwood, Ga. 30294

Do you support the project? ☑ *For* ☐ *Against* ☐ *Conditional* ☐ *Uncommitted*

Comments We are for it if your Property Price is Good.

How did you hear about this meeting? ☐ *Radio* ☐ *Newspaper* ☑ *Signs* ☐ *Word of Mouth*

Was the location of the meeting convenient for you to attend? ☑ Yes ☐ No

If no, please suggest a general location that is more convenient to your community.

Was the time of the meeting convenient for you to attend? ☑ Yes ☐ No

If no, please suggest a time frame that is more convenient for you.

Were your questions answered by the DOT personnel? ☑ Yes ☐ No

Do you understand the project after attending this meeting? ☑ Yes ☐ No

Please share your suggestions on improving the way Georgia DOT conducts public meetings?

Mail To:

Mr. Harvey D. Keepler, State Environmental/Location Engineer
Georgia Department of Transportation
3993 Aviation Circle
Atlanta, GA 30336-1593

22

Georgia Department of Transportation

Public Information Open House Comment Card

Projects STP-037-2(54) & BHF-037-2(55), Clayton County, P.I. Nos. 720815 & 720817

Please print responses.

Name Vicki Warren

Address 1916 Cornell Way
Morrow, Ga. 30260

Do you support the project? ☑ *For* ☐ *Against* ☐ *Conditional* ☐ *Uncommitted*

Comments I think the gutters on the side of the road would benefit from this project. The widening of the road would eliminate these dangerous conditions

How did you hear about this meeting? ☐ *Radio* ☐ *Newspaper* ☑ *Signs* ☑ *Word of Mouth*

Was the location of the meeting convenient for you to attend? ☑ Yes ☐ No

If no, please suggest a general location that is more convenient to your community.

Was the time of the meeting convenient for you to attend? ☑ Yes ☐ No

If no, please suggest a time frame that is more convenient for you.

Were your questions answered by the DOT personnel? ☑ Yes ☐ No

Do you understand the project after attending this meeting? ☑ Yes ☐ No

Please share your suggestions on improving the way Georgia DOT conducts public meetings?

Mail To:
Mr. Harvey D. Keepler, State Environmental/Location Engineer
Georgia Department of Transportation
3993 Aviation Circle
Atlanta, GA 30336-1593

23

Georgia Department of Transportation

Public Information Open House Comment Card

Projects STP-037-2(54) & BHF-037-2(55), Clayton County,

P.I. Nos. 720815 & 720817

Please print responses.

Name Cindy Harty

Address 6157 Amberly Rd
Rex GA 30273

Do you support the project? ☒ *For* ☐ *Against* ☐ *Conditional* ☐ *Uncommitted*

Comments

How did you hear about this meeting? ☐ *Radio* ☐ *Newspaper* ☒ *Signs* ☐ *Word of Mouth*

Was the location of the meeting convenient for you to attend? ☒ Yes ☐ No

If no, please suggest a general location that is more convenient to your community.

Was the time of the meeting convenient for you to attend? ☒ Yes ☐ No

If no, please suggest a time frame that is more convenient for you.

Were your questions answered by the DOT personnel? ☒ Yes ☐ No

Do you understand the project after attending this meeting? ☒ Yes ☐ No

Please share your suggestions on improving the way Georgia DOT conducts public meetings?

I appreciate your concern that we be aware of what your plans are.

Thank you!

Mail To:

Mr. Harvey D. Keepler, State Environmental/Location Engineer
Georgia Department of Transportation
3993 Aviation Circle
Atlanta, GA 30336-1593

24

Georgia Department of Transportation

Public Information Open House Comment Card

Projects STP-037-2(54) & BHF-037-2(55), Clayton County,

P.I. Nos. 720815 & 720817

Please print responses.

Name Marie Harris

Address 1869 Owens Rd Rex, GA 30273

Do you support the project? ☑ *For* ☐ *Against* ☐ *Conditional* ☐ *Uncommitted*

Comments

How did you hear about this meeting? ☐ *Radio* ☐ *Newspaper* ☑ *Signs* ☐ *Word of Mouth*

Was the location of the meeting convenient for you to attend? ☑ Yes ☐ No

If no, please suggest a general location that is more convenient to your community.

Was the time of the meeting convenient for you to attend? ☑ Yes ☐ No

If no, please suggest a time frame that is more convenient for you.

Were your questions answered by the DOT personnel? ☑ Yes ☐ No

Do you understand the project after attending this meeting? ☑ Yes ☐ No

Please share your suggestions on improving the way Georgia DOT conducts public meetings?

Mail To:

Mr. Harvey D. Keepler, State Environmental/Location Engineer
Georgia Department of Transportation
3993 Aviation Circle
Atlanta, GA 30336-1593

25

Georgia Department of Transportation

Public Information Open House Comment Card

Projects STP-037-2(54) & BHF-037-2(55), Clayton County,

P.I. Nos. 720815 & 720817

Please print responses.

Name Stephanie BRUNO / Todd BRUNO

Address 5937 Hwy 42
Ellenwood GA 30294

Do you support the project? ☒ *For* ☐ *Against* ☐ *Conditional* ☐ *Uncommitted*

Comments

How did you hear about this meeting? ☐ *Radio* ☐ *Newspaper* ☑ *Signs* ☐ *Word of Mouth*

Was the location of the meeting convenient for you to attend? ☑ Yes ☐ No

If no, please suggest a general location that is more convenient to your community.

Was the time of the meeting convenient for you to attend? ☑ Yes ☐ No

If no, please suggest a time frame that is more convenient for you.

Were your questions answered by the DOT personnel? ☑ Yes ☐ No

Do you understand the project after attending this meeting? ☑ Yes ☐ No

Please share your suggestions on improving the way Georgia DOT conducts public meetings?

Very good - the Clayton Co DOT guy + the GA DOT guy were very nice + helpful !!

Mail To:

Mr. Harvey D. Keepler, State Environmental/Location Engineer
Georgia Department of Transportation
3993 Aviation Circle
Atlanta, GA 30336-1593

26

Georgia Department of Transportation

Public Information Open House Comment Card

Projects STP-037-2(54) & BHF-037-2(55), Clayton County,

P.I. Nos. 720815 & 720817

Please print responses.

Name Hartford & Maude L. Edwards

Address 5608 Victoria Place
Ellenwood, Ga 30294

Do you support the project? ☒ *For* ☐ *Against* ☐ *Conditional* ☐ *Uncommitted*

Comments

How did you hear about this meeting? ☐ *Radio* ☐ *Newspaper* ☒ *Signs* ☐ *Word of Mouth*

Was the location of the meeting convenient for you to attend? ☒ Yes ☐ No

If no, please suggest a general location that is more convenient to your community.

Was the time of the meeting convenient for you to attend? ☒ Yes ☐ No

If no, please suggest a time frame that is more convenient for you.

Were your questions answered by the DOT personnel? ☒ Yes ☐ No

Do you understand the project after attending this meeting? ☒ Yes ☐ No

Please share your suggestions on improving the way Georgia DOT conducts public meetings?

Knowing the area better
We suggest that a Traffic Light is needed
at US 42 and Doubebridge Road

Mail To:

Mr. Harvey D. Keepler, State Environmental/Location Engineer
Georgia Department of Transportation
3993 Aviation Circle
Atlanta, GA 30336-1593

Department of Transportation

J. TOM COLEMAN, JR.
COMMISSIONER
(404) 656-5206

FRANK L. DANCHETZ
CHIEF ENGINEER
(404) 656-5277

State of Georgia
#2 Capitol Square, S.W.
Atlanta, Georgia 30334-1002

HAROLD E. LINNENKOHL
DEPUTY COMMISSIONER
(404) 656-5212

EARL L. MAHFUZ
TREASURER
(404) 656-5224

September 23, 2002

LOCAL GOVERNMENT PROJECT AGREEMENT

In consideration of the proposed improvements, CLAYTON County agrees to provide or perform the following at no cost to the Georgia D.O.T. for project STP-037-2(54) Clayton Co., PI # 720815-: WIDENING SR 42 FM LAKE HARBIN RD N TO ANVIL BLOCK RD

[ ] Provide all rights-of-way and/or easements needed for the construction of the project and remove existing structures or obstructions within the rights-of-way.

NO [X] ***Make all utility relocations, adjustments or betterments of publicly owned utilities that are in conflict with construction of this project. Reimburse Georgia D.O.T. for any damages paid to the contractor for delay of construction caused by a delay in relocating the publicly owned utilities.***

NO [X] ***Relocate or adjust all privately owned utilities to clear construction of this project, including adjustments at railroad crossings if required.***

[ ] Furnish detours, local borrow and waste pits as needed.

[✓] ***We support this project but choose not to commit any funding, realizing this may delay the project until additional funding can be found.***

This 3rd ***day of*** Oct, ***20*** 02

APPROVED _____

City/County Official

02 OCT -8 AM 10: 12
D.O.T. Personal Files

2015

Plan Year 2015

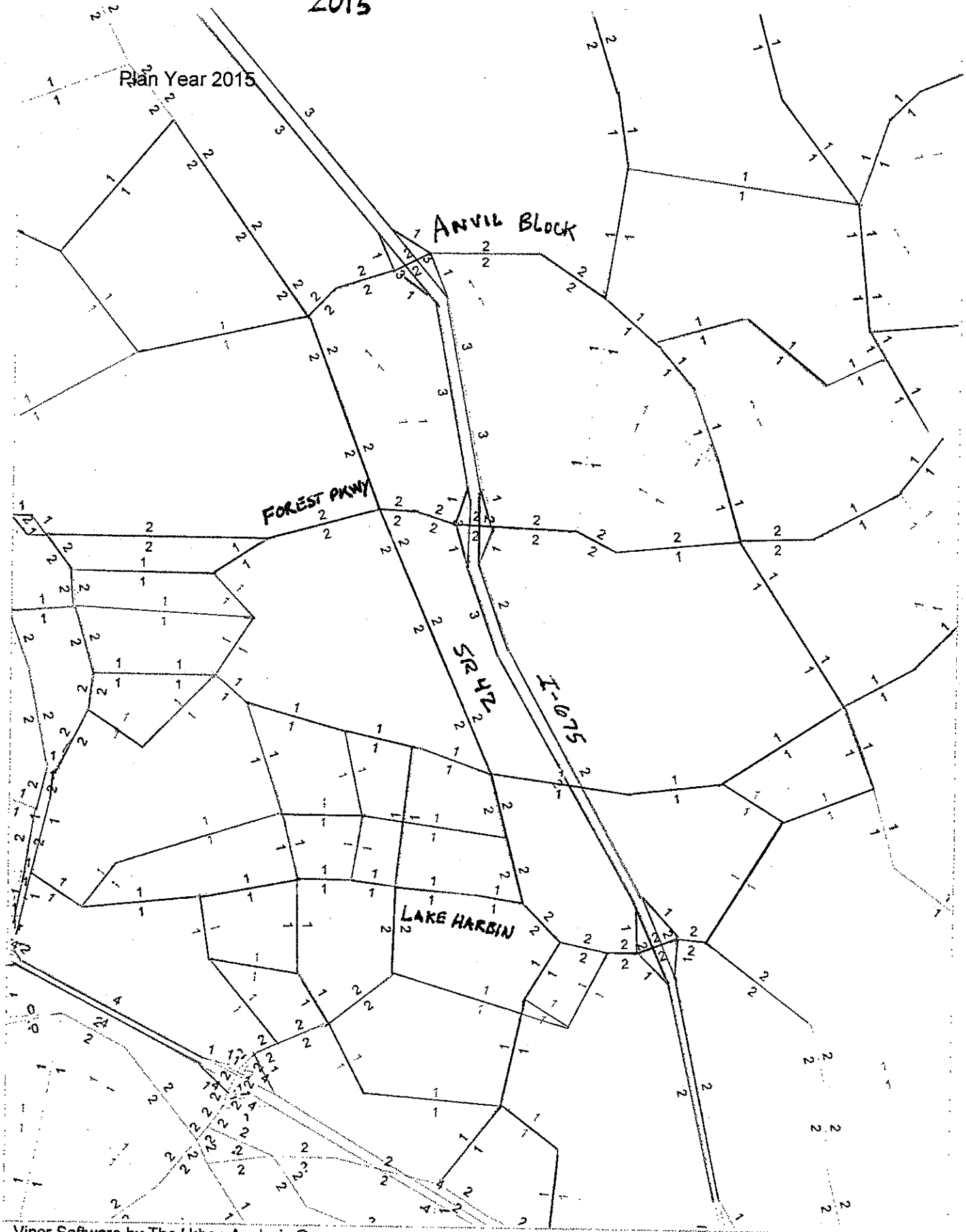

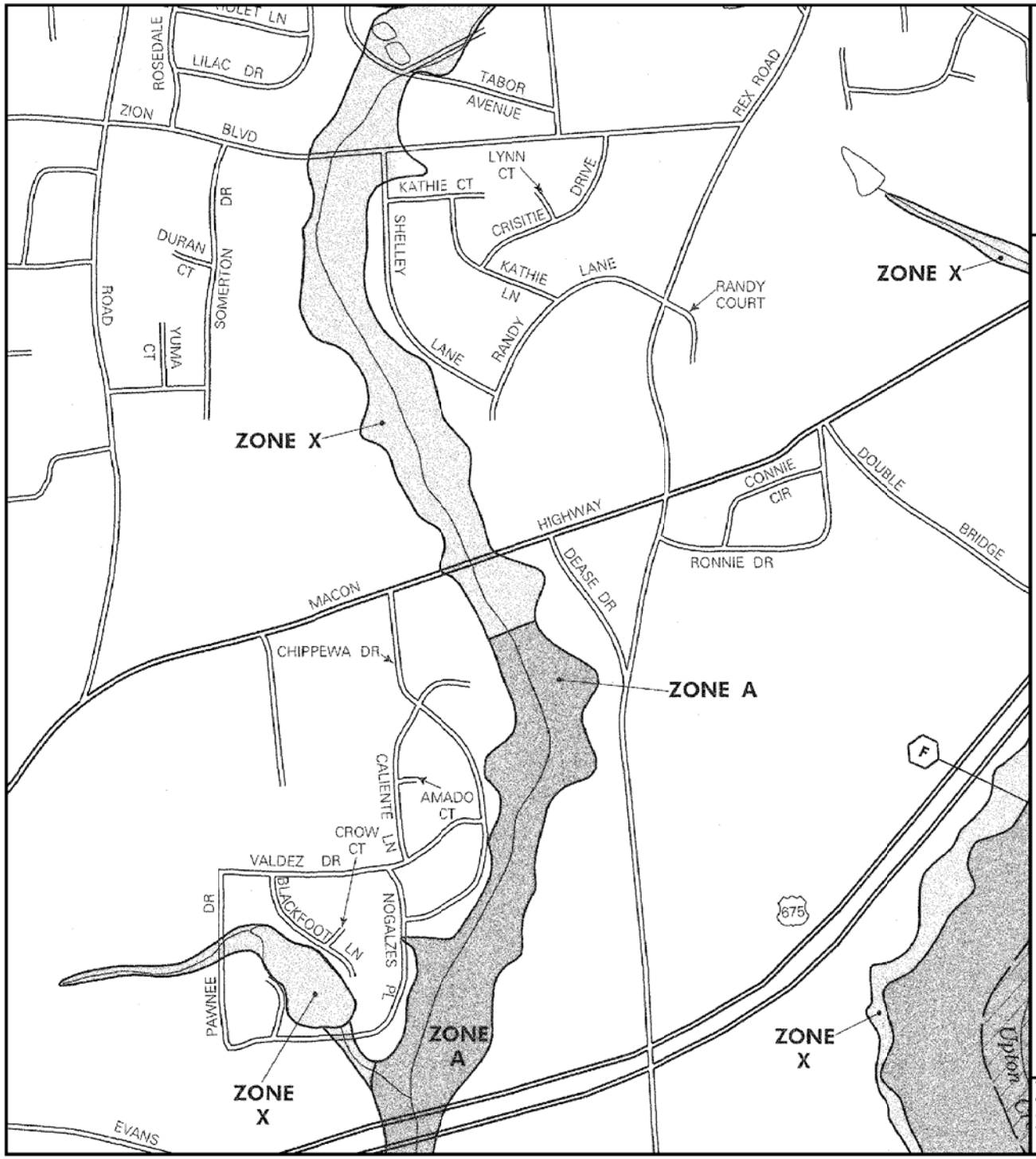

APPROXIMATE SCALE

1000 0 1000 FEET

LEGEND

SPECIAL FLOOD HAZARD AREAS INUNDATED BY 100-YEAR FLOOD

ZONE A No base flood elevations determined.

ZONE AE Base flood elevations determined.

ZONE AH Flood depths of 1 to 3 feet (usually areas of ponding); base flood elevations determined.

ZONE AO Flood depths of 1 to 3 feet (usually sheet flow on sloping terrain); average depths determined. For areas of alluvial fan flooding, velocities also determined.

ZONE A99 To be protected from 100-year flood by Federal flood protection system under construction; no base flood elevations determined.

ZONE V Coastal flood with velocity hazard (wave action); no base flood elevations determined.

ZONE VE Coastal flood with velocity hazard (wave action); base flood elevations determined.

FLOODWAY AREAS IN ZONE AE

OTHER FLOOD AREAS

ZONE X Areas of 500-year flood; areas of 100-year flood with average depths of less than 1 foot or with drainage areas less than 1 square mile; and areas protected by levees from 100-year flood.

OTHER AREAS

ZONE X Areas determined to be outside 500-year floodplain.

ZONE D Areas in which flood hazards are undetermined, but possible.

UNDEVELOPED COASTAL BARRIERS*

Identified 1983

Identified 1990 or Later

Otherwise Protected Areas Identified 1991 or Later

*Coastal barrier areas are normally located within or adjacent to Special Flood Hazard Areas.

Floodplain Boundary

Floodway Boundary

Zone D Boundary

Boundary Dividing Special Flood Hazard Zones, and Boundary Dividing Areas of Different Coastal Base Flood Elevations Within Special Flood Hazard Zones.

513 — Base Flood Elevation Line Elevation in Feet**

A — A — Cross Section Line

23 - - - - - 23 — Transect Line

(EL 987) — Base Flood Elevation in Feet Where Uniform Within Zone**

RM7 x — Elevation Reference Mark

● M1.5 — River Mile

**Referenced to the National Geodetic Vertical Datum of 1929

This is an official copy of a portion of the above referenced flood map. It was extracted using F-MIT On-Line. This map does not reflect changes or amendments which may have been made subsequent to the date on the title block. For the latest product information about National Flood Insurance Program flood maps check the FEMA Flood Map Store at www.msc.fema.gov

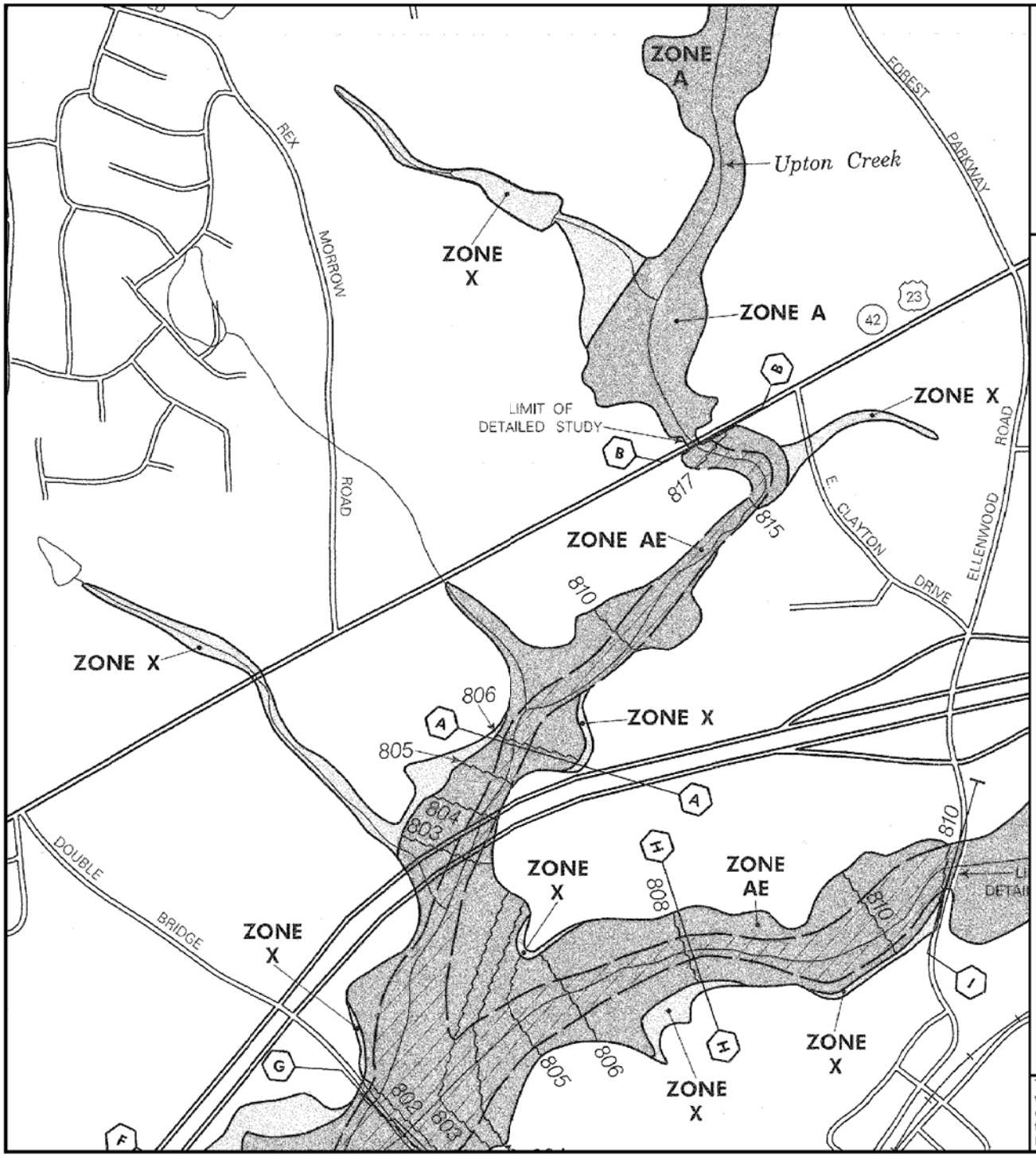

APPROXIMATE SCALE

1000 0 1000 FEET

LEGEND

SPECIAL FLOOD HAZARD AREAS INUNDATED BY 100-YEAR FLOOD

- **ZONE A** No base flood elevations determined.
- **ZONE AE** Base flood elevations determined.
- **ZONE AH** Flood depths of 1 to 3 feet (usually areas of ponding); base flood elevations determined.
- **ZONE AO** Flood depths of 1 to 3 feet (usually sheet flow on sloping terrain); average depths determined. For areas of alluvial fan flooding, velocities also determined.
- **ZONE A99** To be protected from 100-year flood by Federal flood protection system under construction; no base flood elevations determined.
- **ZONE V** Coastal flood with velocity hazard (wave action); no base flood elevations determined.
- **ZONE VE** Coastal flood with velocity hazard (wave action); base flood elevations determined.

FLOODWAY AREAS IN ZONE AE

OTHER FLOOD AREAS

- **ZONE X** Areas of 500-year flood; areas of 100-year flood with average depths of less than 1 foot or with drainage areas less than 1 square mile; and areas protected by levees from 100-year flood.

OTHER AREAS

- **ZONE X** Areas determined to be outside 500-year floodplain.
- **ZONE D** Areas in which flood hazards are undetermined, but possible.

UNDEVELOPED COASTAL BARRIERS*

Identified 1983 | Identified 1990 or Later | Otherwise Protected Areas Identified 1991 or Later

* Coastal barrier areas are normally located within or adjacent to Special Flood Hazard Areas.

Floodplain Boundary

Floodway Boundary

Zone D Boundary

Boundary Dividing Special Flood Hazard Zones, and Boundary Dividing Areas of Different Coastal Base Flood Elevations Within Special Flood Hazard Zones.

513 — Base Flood Elevation Line Elevation in Feet**

A — A Cross Section Line

23 - - - - - 23 Transect Line

(EL 987) Base Flood Elevation in Feet Where Uniform Within Zone**

RM7 x Elevation Reference Mark

● M1.5 River Mile

**Referenced to the National Geodetic Vertical Datum of 1929

This is an official copy of a portion of the above referenced flood map. It was extracted using F-MIT On-Line. This map does not reflect changes or amendments which may have been made subsequent to the date on the title block. For the latest product information about National Flood Insurance Program flood maps check the FEMA Flood Map Store at www.msc.fema.gov