Georgia Department of Transportation

SR 144 WIDENING FROM CR 100 (TIMBER TRAIL RD) TO CR 154 (BELFAST KELLER RD)

Project No. STP00-0630-00(010)

P.I. No. 532370

Bryan County, Georgia

Value Engineering Study Report

Preliminary Design Submittal

December 2008

Designer:
Georgia Department of Transportation

Value Engineering Consultant
Lewis & Zimmerman Associates, Inc.

Lewis & Zimmerman Associates, Inc.
Taking the Chance out of Change
1000 Town Center, Suite 180-27
Tacoma, Washington 98422
253/925-8741 • Fax: 253/925-8791 • Cell: 253/229-7703
dahamilton@lza.com • www.lza.com

December 17, 2008

Ms. Lisa Myers
Design Review Engineering Manager
State of Georgia
Department of Transportation
600 West Peachtree Street, 5th Floor
Atlanta, Georgia 30308

re: SR 144 Widening from CR 100 (Timber Trail Rd) to CR 154 (Belfast Keller Rd)
STP00-0630-00(010), P.I. No. 532370, Bryan County, Georgia
Value Engineering Study Report

Dear Ms. Myers:

Lewis & Zimmerman Associates, Inc. is pleased to present two paper copies and one electronic copy of the value engineering study report on the referenced project. We appreciate your assistance in the conduct of this study, and hope that these VE recommendations will provide a variety of improvements that will enhance the true value and constructability of the SR 144 Widening Project in Bryan County, Georgia. Some of the more interesting alternatives optimize the drainage system along the road and reduce the amount of import material.

We appreciate the excellent participation of the GDOT District 5 design team throughout the conduct of this study. Please feel free to contact David Hamilton at 253/229-7701 if you have any questions as you review this report.

Sincerely,

LEWIS & ZIMMERMAN ASSOCIATES, INC.

David A. Hamilton, P.E., CVS, CCE, LEED™ AP
Vice President/VE Team Leader
Certified Value Specialist No. 910506 - Life

Enclosures

TABLE OF CONTENTS

EXECUTIVE SUMMARY

Introduction	1
Purpose and Need	1
Concerns and Objectives	2
Results	3
Summary of Potential Cost Savings	5

STUDY RESULTS

General	7
Results of the Study	7
Evaluation of Alternatives	8
Considerations and Assumptions	8
Potential Cost Savings	9

PROJECT DESCRIPTION

Purpose and Need	75
Location Map	76
Preliminary Cost Estimate	78

VALUE ANALYSIS AND CONCLUSIONS

General	83
Pre-Study Preparation	83
Value Engineering Workshop Effort	83
Post-Study Procedures	86
Value Engineering Study Agenda	87
Value Engineering Workshop Participants	90
Economic Data	92
Cost Model	93
Function Analysis	95
Random Function Analysis	96
Creative Idea Listing and Judgment of Ideas	97

Executive Summary

Executive Summary

EXECUTIVE SUMMARY

INTRODUCTION

This value engineering (VE) study summarizes the events and results of the VE study conducted by Lewis & Zimmerman Associates, Inc. (LZA) for the Georgia Department of Transportation (GDOT). The subject of the study was the Preliminary Design Submittal on the SR 144 Widening from CR 100 (Timber Trail Rd) to CR 154 (Belfast Keller Rd) (STP00-0630-00(010), P.I. No. 532370) project located in Bryan County, Georgia. This busy corridor just west of Savannah is in need of major improvements to widen the roadway from two lanes to four lanes, increasing the Level of Service (LOS) and reducing the potential for accidents. The project is being designed by GDOT design personnel.

The study was conducted December 2 - 5, 2008 at the GDOT Central Office, located in Atlanta, Georgia and was conducted under the value engineering guidelines of GDOT, FHWA, and SAVE International (The Value Society). VE team members consisted of a Certified Value Specialist from LZA, and design and construction professionals from local highway engineering consultants.

Decision Making

Value engineering studies by their nature identify alternate design schemes, construction methods, and project delivery options, which if accepted by the project users and design team, may impact the final scope, design documents, budget, schedule, functionality, and appearance of the SR 144 Widening Project. The task of the VE team is to identify possible solutions, whereas the task of the GDOT and the inhouse design team is to choose the most favorable of the VE alternatives for incorporation into the project.

Decisions are needed on each of the alternatives presented in this report and personnel from GDOT are totally empowered to accept, reject, or modify these alternatives. Value engineering by its nature searches for new, unique, and different methods to provide for the needed project functions at the lowest total life cycle (30 yr) cost. The blending of these new and sometimes challenging ideas with established procedures, norms, and protocol is the responsibility of the project team. The project team should feel free to accept alternatives which support its construction program and similarly reject alternatives which do not optimize its goals for the SR 144 corridor.

PURPOSE AND NEED

The purpose of this project is to improve the safety and operational conditions of State Route 144 through the addition of two travel and turn lanes that will accommodate existing and future traffic volumes. Potential benefits of the project include energy conservation through the efficient movement of traffic that would otherwise be idle or delayed without the improvement and a safer traveling environment. Traffic signals will be added at mile post (MP) 11.36 (CR 100 Timber Trail Rd) and MP 13.29 (Port Royal Rd) to improve safety and reduce the number of accidents.

Typical Section:
The current typical section of the proposed urban four-lane section of roadway includes a 20-ft.-wide raised grassed median with sidewalks starting at Timber Trail, approximately MP 11.4 to 144 Spur (MP 15.2). Between MP 11.6 and MP 14.7, the typical section was to contain a 22.5ft shoulder with an 8-ft.-wide asphalt bike lane. This typical section will be revised to an urban, four-lane section of roadway with 4-ft.-wide bike lanes, 20-ft.-wide raised grass median, and 12-ft. shoulders with sidewalks included.

Project termini:
The current project termini is MP 11.4 (Timber Trail Road) southeast to MP 16.0 (County Road 154) with a project length of 4.6 miles. These termini need to be changed at the beginning to include a signalized intersection at Timber Trail and at the end of the project it needs to be lengthened to transition the traffic after County Road 154 back to the existing roadway typical. The total length of the project will now be 4.93 miles.

Construction Cost:

Total construction:	$18.05M	(Includes engineering, inspection, and contingency)
Right of Way:	$8.60M	
Grand Total Project Cost	**$27.00M**	(rounded)

CONCERNS AND OBJECTIVES

During the presentation by the representatives from the GDOT design team on the first day of the VE study, several areas of concern in the development of the project were noted. These items were identified as areas of opportunity to improve value, meet design requirements, satisfy goals, and reduce project risk.

- The cost for new right-of-way is substantial due to the very wide desired right-of-way and length of the project.
- The investment in the new drainage system appears rather robust and some optimization may be possible. The use of more open drainage could be investigated.
- Accidents have been recorded along the alignment, but are clumped in specific areas near access roads fronting SR 144. There are a total of seven T-intersections, two four-legged intersections, and numerous driveways fronting SR 144.
- Deer also appear to be a local problem with quite a number of accidents spread along the alignment.
- Curve geometry at STA 172+00 needs to be revised and the radius increased to allow for a minimum 45mph design speed. Some options with more superelevation could be investigated as the design progresses.
- Traffic projections for the year 2015 are in the range of 21,000 ADT and design year 2035 projections in the range of 32,500 ADT.

- Approximately 250,000CY of material for roadway base is required. The total cost for just this line item is almost $4M. Placement of this volume of fill will require a significant amount of time, pushing the construction duration out to approximately 24 months.

Project Constraints

Discussions held during the VE study evolved around several key constraints that must be incorporated in the design:

- The proposed alignment along SR 144 is generally fixed due to the large amount of residential and retail development in the area. The frequency of existing driveways off of SR 144 improves access to local businesses, but increases the potential for rear-end accidents from through traffic.
- There are a number of side streets which tend to fix the roadway profile in a number of locations.
- Traffic projections along SR 144 reinforce the decision for four lanes with a median through the corridor.
- The existing bridge was constructed in 1990 and has a current sufficiency rating of 94.52, reflecting excellent condition. Reuse of this structure is deemed mandatory.

RESULTS

To address the concerns noted above, the VE team conducted a brainstorming session and identified ways to improve the value and constructability of the structure. A summary of the key recommendations include:

Alignment (A)

- To assist in controlling project cost and maximize the value of the investment in the corridor, shorten the alignment on the south end by approximately one mile. This end of the project has substantially lower ADTs and could function in the existing two lane configuration for some time into the future. This concept then would defer the investment in the area, but not eliminate the future need. The cost savings is in the range of $3.3M.

Section (S)

- Bike lanes are included on both sides of the road under the current plan and will interconnect with facilities on either end of the corridor. The current bike lanes or paths are on private property and have been formalized through many years of use. One option would be to use a single multi-use path on the east side of SR 144 to accommodate both pedestrians and bicyclists. This change would result in a net cost savings of approximately $1.1M, which includes the cost of right-of-way needed for the wider section.
- Another potential change to the section uses 11-ft.-wide travel lanes on the inside, while retaining 12-ft.-wide lanes on the outside. This change reduces the amount of right-of-way by two feet throughout the total length of the corridor and results in a net savings to the project of more than $500,000. Since the percentage of truck traffic for the corridor is only 6%, narrower lanes could be considered.

- To control future maintenance cost, it is proposed to replace the raised grass median with a raised concrete paved median. This will eliminate the ongoing mowing expense, thus eliminating future maintenance requirements over the planned 30-year economic period. Although this idea would increase the project capital cost by approximately $1.5M, it would breakeven at the end of 30 years.
- To reduce right-of-way, use a 24-in.-wide curb and gutter section rather than 30-in.-wide curb and gutter section. This will reduce the right-of-way requirement by one foot for the entire 26,000-ft. long corridor. The total expected cost savings from this change is more than $185,000.
- Further budget control would include the deferment of the sidewalk on the east side of the road. This sidewalk is worth more than $500,000 and could easily be installed in the future when the demand for pedestrian facilities increases.

Bridge (B)

- The bridge offers some interesting options for cost control also. The 20-ft.-wide median as planned could be reduced to as low as 8-ft. since no turning facilities are projected and there are several thousand feet of roadway on either side of the bridge. Thus tapers could be easily installed. The bridge width would be reduced from 92-ft. to 80-ft., saving an estimated $125,000. All other dimensions of the bridge would remain the same.

The following table, Summary of Potential Cost Savings, summarizes all of the alternatives developed. The Study Results section of the report provides additional backup support.

Note that all of the alternatives were developed independent of each other. Therefore, some are interrelated or mutually exclusive and the total cost savings achievable is dependent of the combination of ideas selected for implementation.

SUMMARY OF POTENTIAL COST SAVINGS

PROJECT: **SR 144 WIDENING FROM CR 100 TO CR 154**

Project: STP00-0630-00(010), Bryan County, Georgia

ALT. NO.	DESCRIPTION	ORIGINAL COST	ALTERNATIVE COST	PRESENT WORTH OF COST SAVINGS: INITIAL COST SAVINGS	RECURRING COST SAVINGS	TOTAL PW LCC SAVINGS
ALIGNMENT (A)						
A-1	Use right in/right out only on CR 133 (Sterling Rd); modify the street access as necessary.	**DESIGN SUGGESTION**				
A-3	Reduce the project termination point on the south end from STA 275 to STA 219+00 and shorten the project by one mile.	$3,349,249	0	$3,349,249		$3,349,249
A-5	Reduce the horizontal radius at STA 172+00 from 1,900ft to 650ft and add about a 6% superelevation to meet 45mph design requirement.	$939,654	0	$939,654		$939,654
A-6	Close the mainline median access point at STA 159+00. Use right in/right out.	**DESIGN SUGGESTION**				
A-7	Close the median at Sterling Road Subdivision (STA 119+00). Use right in/right out.	**DESIGN SUGGESTION**				
A-8	Close the median access at Rabbit Hill Road (STA 136+00) and extend the road to CR 97.	**DESIGN SUGGESTION**				
SECTION (S)						
S-1	Use a single 10-ft.-wide multi-use path in lieu of two sidewalks.	$2,145,649	$1,007,139	$1,138,510		$1,138,510
S-2	Use 11-ft.-wide lanes on the inside in lieu of 12-ft.-wide lanes. Keep 12 ft. lanes on the outside.	$539,112	0	$539,112		$539,112
S-3	Use a 20-ft.- wide raised median with a 45mph design speed for the whole alignment in lieu of a mix of 45 and 55mph.	**DESIGN SUGGESTION**				
S-4	Use 18ft. raised grass median in lieu of 20 ft and 24 ft medians.	$287,679	0	$287,679		$287,679

SUMMARY OF POTENTIAL COST SAVINGS

PROJECT: **SR 144 WIDENING FROM CR 100 TO CR 154**

Project: STP00-0630-00(010), Bryan County, Georgia

ALT. NO.	DESCRIPTION	ORIGINAL COST	ALTERNATIVE COST	PRESENT WORTH OF COST SAVINGS: INITIAL COST SAVINGS	PRESENT WORTH OF COST SAVINGS: RECURRING COST SAVINGS	PRESENT WORTH OF COST SAVINGS: TOTAL PW LCC SAVINGS
SECTION (S) (cont.)						
S-5	Use concrete paved median in lieu of grassed median and eliminate the mowing over the next 30 years.	$26,640	$1,502,629	($1,475,989)	$1,486,041	$10,052
S-6	Use a Tensar type geogrid reinforcement and reduce the amount of base material from 5 inches to 2.5 inches.	$5,776,668	$4,941,837	$834,831		$834,831
S-7	Use 24-in. wide curb and gutter section in lieu of 30-in.-wide section	$1,613,384	$1,427,270	$186,114		$186,114
S-8	Place the sidewalk on one side of the road only. Put the sidewalk on the West side.	$516,257	0	$516,257		$516,257
S-9	Reduce the width of shoulders from 12ft to 10ft at locations without sidewalks.	$8,600,000	$8,523,605	$76,395		$76,395
S-11	Use two lanes with a raised grass median in lieu of four and retain the existing bridge. Purchase all required R/W, but defer the major improvements.	$11,536,274	$842,944	$10,693,330		$10,693,330
S-12	Use more ditches and less curb and gutter on the East side only; assume a 4-lane section.	$1,322,845		$1,322,845		$1,322,845
BRIDGE (B)						
B-1	Reduce the median on the bridge from 20 ft to 8 ft and taper the median on either side of the bridge.	$955,843	$831,168	$124,675		$124,675
B-2	Build a new parallel bridge in lieu of widening the existing bridge. Reduce the area of the bridge.	$955,843	$485,714	$470,129		$470,129
B-3	Add a sidewalk on only the west side of the bridge (new construction side). Do not add sidewalk on the existing bridge.	$15,672		$15,672		$15,672

Study Results

Study Results

STUDY RESULTS

GENERAL

The results are the major feature of a VE study since they represent the benefits that can be realized on the project by GDOT and the local patrons that use SR 144 in Bryan County, Georgia.

The recommended engineering and construction management suggestions are presented as individual alternatives for specific change. These may be in the form of VE alternatives with cost savings, or design suggestions without associated cost. Individual comments on the current design are presented with a summary of the original design, a description of the proposed enhancements to the chosen improvement scheme, and if appropriate, a descriptive evaluation of the advantages and disadvantages. Suggested alternatives on the current project are accompanied by a brief narrative to compare the original design and the proposed modifications. Sketches, where appropriate, are also presented.

Design suggestions provide opportunities to improve value in areas such as constructability, ease of maintenance, minimization of risk, and less disruption upon roadway operations during construction. In addition, some ideas cannot be quantified in terms of cost with the design information provided; these are also presented as design suggestions and are intended to improve the quality of the project.

The summaries of the more favorable improvements to the project follow this narrative on a table entitled, *Summary of Potential Cost Savings*. The table is divided into major project elements for convenience of the reviewer and is used to divide the study results section. The complete documentation of the developed VE alternatives follows the *Summary of Potential Cost Savings*.

RESULTS OF THE STUDY

The value engineering team brainstormed 26 creative ideas that could enhance the value of the project in the areas noted by GDOT as being desirable, such as cost control, safety, durability, ease of operation, expected life, constructability, and traffic improvement. Evaluation of those ideas considered the full range of project value objectives and resulted in the development of a number of alternatives.

The alternatives are presented with the following designations to aid in organization and review.

CATEGORY	PREFIX
Alignment	A
Section	S
Bridge	B

EVALUATION OF ALTERNATIVES

When reviewing the study results, the reader should consider each part of an alternative or design suggestion on its own merit. There may be a tendency to disregard an alternative because of concern about one part of it. Each area within an alternative that is acceptable should be considered for use in the final design, even if the entire alternative is not implemented. Design variations of these alternatives are encouraged.

Cost Comparisons

Cost is a primary basis of comparison for alternative designs, but other project criteria must also be considered when selecting alternatives for further analysis. Negative impacts upon existing traffic is extremely critical and design modifications that impact traffic, right of way, safety, or environment elements should be selected carefully following detailed review.

Comparison cost estimates were prepared for the original design and the alternative design using the project cost estimate or data from the GDOT cost database. A markup of 11% was added to account for project engineering and construction supervision.

All alternatives and design suggestions were developed independently of each other. Some of the alternatives are "mutually exclusive," so acceptance of one may preclude the acceptance of another. Multiple solutions to a single function were sought. Some of the alternatives are interrelated, so acceptance of one element may also be included in other alternatives. The reader should evaluate those alternatives carefully in order to select the combination of ideas with the greatest beneficial impact on the project.

CONSIDERATIONS AND ASSUMPTIONS

In the preparation of this report and the alternatives that follow, the VE team made some assumptions with respect to conditions that may occur in the future. In addition, the VE team reviewed the project documentation, relying solely upon the information provided by the designer and owner, and relying on that information as being true, complete and accurate.

SUMMARY OF POTENTIAL COST SAVINGS

PROJECT: **SR 144 WIDENING FROM CR 100 TO CR 154**

Project: STP00-0630-00(010), Bryan County, Georgia

ALT. NO.	DESCRIPTION	ORIGINAL COST	ALTERNATIVE COST	PRESENT WORTH OF COST SAVINGS: INITIAL COST SAVINGS	PRESENT WORTH OF COST SAVINGS: RECURRING COST SAVINGS	PRESENT WORTH OF COST SAVINGS: TOTAL PW LCC SAVINGS
ALIGNMENT (A)						
A-1	Use right in/right out only on CR 133 (Sterling Rd); modify the street access as necessary.	**DESIGN SUGGESTION**				
A-3	Reduce the project termination point on the south end from STA 275 to STA 219+00 and shorten the project by one mile.	$3,349,249	0	$3,349,249		$3,349,249
A-5	Reduce the horizontal radius at STA 172+00 from 1,900ft to 650ft and add about a 6% superelevation to meet 45mph design requirement.	$939,654	0	$939,654		$939,654
A-6	Close the mainline median access point at STA 159+00. Use right in/right out.	**DESIGN SUGGESTION**				
A-7	Close the median at Sterling Road Subdivision (STA 119+00). Use right in/right out.	**DESIGN SUGGESTION**				
A-8	Close the median access at Rabbit Hill Road (STA 136+00) and extend the road to CR 97.	**DESIGN SUGGESTION**				
SECTION (S)						
S-1	Use a single 10-ft.-wide multi-use path in lieu of two sidewalks.	$2,145,649	$1,007,139	$1,138,510		$1,138,510
S-2	Use 11-ft.-wide lanes on the inside in lieu of 12-ft.-wide lanes. Keep 12 ft. lanes on the outside.	$539,112	0	$539,112		$539,112
S-3	Use a 20-ft.- wide raised median with a 45mph design speed for the whole alignment in lieu of a mix of 45 and 55mph.	**DESIGN SUGGESTION**				
S-4	Use 18ft. raised grass median in lieu of 20 ft and 24 ft medians.	$287,679	0	$287,679		$287,679

VALUE ENGINEERING ALTERNATIVE

PROJECT: **SR 144 WIDENING FROM CR 100 TO CR 154** ALTERNATIVE NO.: **A-3**
Project No. STP00-0630-00(010) Bryan County, Georgia
Preliminary Submittal

DESCRIPTION: **REDUCE PROJECT LENGTH BY CHANGING THE END OF CONSTRUCTION FROM STA. 275+00 TO STA. 219+00** SHEET NO.: **1 of 3**

ORIGINAL DESIGN:

The present design ends the project widening at STA. 275+00, east of CR 154.

ALTERNATIVE:

End the project widening at STA. 219+00 instead of STA. 275+00, thus reducing the length of the project by 5,600 feet (1.061 miles). This would end the project east of the SR 144 spur.

ADVANTAGES:

- Saves construction cost
- Saves right-of-way cost
- Saves construction time

DISADVANTAGES:

- Does not widen SR 144 through the CR 154 intersection

DISCUSSION:

The traffic volumes decrease moderately after the SR 144 spur intersection. It is approximately a mile between the SR 144 spur intersection and the CR 154 intersection. The additional construction cost for this widening may not be justified at this time. It is recommended to save this construction cost and include the widening of SR 144 in any future widening projects on SR 144.

COST SUMMARY	INITIAL COST	PRESENT WORTH RECURRING COSTS	PRESENT WORTH LIFE-CYCLE COST
ORIGINAL DESIGN (Savings)	$ 3,349,249	—	$ 3,349,249
ALTERNATIVE	$ 0	—	$ 0
SAVINGS (Original minus Alternative)	$ 3,349,249	—	$ 3,349,249

PROJECT: **SR 144 WIDENING FROM CR 100 TO CR 154**
Project No. STP00-0630-00(010) - Bryan County, Georgia
Preliminary Submittal

ALTERNATIVE NO.: A-3

SHEET NO.: 2 of 3

Mainline Pavement Cost

Asphaltic Concrete 1.25" + 2" + 5" = 8.25" (total)

$\left(8.25" \times \frac{110\#}{SY\text{-}In}\right) \times \frac{T}{2000\#} \times \$94/T = \$42.65/SY$

GAB (10") (from GDOT) $= \$16.46/SY$

Full Depth Pavement Section: $\$59.11/SY$

The $94/SY (Asphalt) and GAB-10" $16.46/SY

Decrease Project Length by 5,600':

$\frac{5600' \times (24'+24'+4'+4')}{9SF/SY} = 34,844\ SY\ (\text{saved mainline})$

Rural Shoulder: $\frac{(6.5' \times 2) \times 5600'}{9sf/sy} = 8,089\ SY\ (\text{saved shoulder})$

Saved Grading: $\frac{40'\text{ extra-widening} \times 3' \times 5,600'}{27cf/cy} = 25,000CY$

Saved R/W: $\frac{(60' \times 200') + (500' \times 50') + (400' \times 5')}{43,560SF/AC} = 0.90AC$

Use Residential: $30,000/AC (GDOT R/W Estimate for Land only)

Shoulder Cost: $3.25" \times \frac{110\#}{SY} \times \frac{T}{2000\#} \times \$94/T = \$16.80/SY$

GAB 6" $(.6 \times \$16.46) = \$9.88/SY$ $(\$9.88 + \$16.80) = \$26.68/SY$

COST WORKSHEET

PROJECT: **SR 144 WIDENING FROM CR 100 TO CR 154**

Project No. STP00-0630-00(010) Bryan County, Georgia

Design Development Stage

ALTERNATIVE NO.: **A-3**

SHEET NO.: **3 of 3**

PROJECT ITEM		ORIGINAL ESTIMATE			ALTERNATE ESTIMATE		
ITEM	UNITS	NO. OF UNITS	COST/ UNIT	TOTAL	NO. OF UNITS	COST/ UNIT	TOTAL
Saved original design:							
Full depth pavement	SY	34,844	59.11	2,059,629			
Grading (borrow)	CY	25,000	15.00	375,000			
Pavement shoulder	SY	8,089	26.68	215,815			
Median curb and gutter	LF	11,000.00	21.00	231,000			
Drainage crossdrains	LS			20,000			
Signing and marking	MI	1.06	10,000.00	10,600			
Erosion control	MI	1.06	50,000.00	53,000			
Construction Subtotal				2,965,044			
Markup (%) at 11%				326,155			
Right-of-Way Subtotal				27,000			
Markup (%) at 115%				31,050			
TOTAL				3,349,249			

VALUE ENGINEERING ALTERNATIVE

PROJECT: **SR 144 WIDENING FROM CR 100 TO CR 154** ALTERNATIVE NO.: **A-5/A-9**
Project No. STP00-0630-00(010) Bryan County, Georgia
Preliminary Submittal

DESCRIPTION: **REDUCE RADIUS AT STA 172+00 FROM R = 1900-FT. TO 650-FT., SUPERELEVATE THE ROAD AND ADD A SIGNAL AT STA. 172+00** SHEET NO.: **1 of 3**

ORIGINAL DESIGN:

The original design shifts the new alignment west from PC 163+87.98 (existing) until tying back into the existing pavement at PT 183+85.42.

ALTERNATIVE:

Maintain the existing horizontal alignment from the mainline intersection at CR 134/Ogee Chee Drive, STA. 159+92.10 to the mainline intersection at McRae Road/STA. 189+02.00. Increase the existing curve and superelevate the road to aid turning efficiency for emergency vehicles. Add a traffic signal at STA. 172+00 . Modify the overall profile grade between STA. 112+02.77 to STA. 183+42. The existing pavement evaluation will also determine the extent of this effort.

ADVANTAGES:

- Reduces construction cost
- Reduces right-of-way cost and impacts
- Promotes safer traveling
- Reduces traffic accidents
- Cost-effective design
- Reuses existing pavement and easement

DISADVANTAGES:

- Need to coordinate impact of super elevation on side roads

DISCUSSION:

The proposed alternative will reduce costs for both construction and right-of-way. It will further aid in reducing traffic accidents and promote safer travel. The reduction in costs for both construction and right-of-way will compensate for adding the signal and leveling to increase the super elevation. The overall impacts would result in modifying the current alignment beginning at PC STA. 112+02+76 to STA. 183+85+85.42 to achieve this cost reduction.

COST SUMMARY	INITIAL COST	PRESENT WORTH RECURRING COSTS	PRESENT WORTH LIFE-CYCLE COST
ORIGINAL DESIGN	$ 939,654	—	$ 939,654
ALTERNATIVE	$ 0	—	$ 0
SAVINGS (Original minus Alternative)	$ 939,654	—	$ 939,654

- x L (4 ...

CALCULATIONS

PROJECT: **SR 144 WIDENING FROM CR 100 TO CR 154**
Project No. STP00-0630-00(010) - Bryan County, Georgia
Preliminary Submittal

ALTERNATIVE NO.: A-5 / A-9

SHEET NO.: 2 of 3

* REDUCE RADIUS AT STA. 172+00 FROM R=1900' TO R=650' (EXIST.) W/SUPER OF 4% - 6% & 45 MPH
* ADD SIGNAL AT STA. 172+00 AND KEEP ROADWAY ON EXISTING ALIGINMENT

PLAN, PROFILE AND CROSS-SECTION CHANGE

- STA. 112+02.76 TO STA. 183+85.42 - 7,182.66 LF = 7,183 LF

DESIGN FOR 4-INCH LEVELING BETWEEN STATIONS FOR ASPHALT BASE

- NEW PVMT -

LEVELING NORTH BOUND TRAVEL LANE

7,183 LF × 24'/9 × (4in (110 lbs/in·YD²) ÷ 2000 = 4,214.03 TNS

E-TOPPING - 1¼"

7,183 LF × 24 / 9 = 19,154.67 SY (137.50 lbs/SY) ÷ 2000 = 1,316.88 TNS

B-BINDER - 2"

7,183 LF × 24 / 9 = 19,154.67 SY (220 lbs/SY) ÷ 2000 = 2,107.01 TNS

✓GRADING REDUCTION = 7,183 LF × 75' = 538,725.00 SF × 3/27
= 59,858.33 CY × $15.00
= $897,874.95

REDUCTION ITEMS IN PAVEMENT

25mm SUPERPAVE

7,183 LF × 24/9 = 19,154.67 SY (550 lbs/SY) ÷ 2000 = 5,267.53 TNS

10-INCHES G.A.B/12 = .833'

.833 (7,183 LF × 24') = 143,660.00 FT³ (115 lbs/FT³) ÷ 2000
= 8,260.45 TNS

7,183 LF × 24' = 172,392.00/9
= 19,154.67 (.10)
= 1,915.467

19,154.67 + 1,915.47 = 21,070.13 SY

R.O.W REDUCTION 2.15 MARK UP

7,183 LF × 15 W = 107,745 SF × $0.68/SF = $73,266.60 × 2.15 = $157,523.19

R.O.W. IMPACT

1- RELOCATION 1 × 40,000 × 2.15 = $86,000

SIGNAL - NEW INSTALLATION

1 @ 150,000 ADDED VALUE

COST WORKSHEET

PROJECT: **SR 144 WIDENING FROM CR 100 TO CR 154**
Project No. STP00-0630-00(010) Bryan County, Georgia
Design Development Stage

ALTERNATIVE NO.: **A-5/A-9**
SHEET NO.: **3 of 3**

PROJECT ITEM		ORIGINAL ESTIMATE			ALTERNATE ESTIMATE		
ITEM	UNITS	NO. OF UNITS	COST/ UNIT	TOTAL	NO. OF UNITS	COST/ UNIT	TOTAL
WIDENING AND OVERLAY SECTION							
206-0002 borrow excavation, include material	CY	59,858.00	15.00	897,870.00			
402-1340 recycle asphalt concrete 9.5 mm super	TN	1,316.88	92.19	121,403.17			
402-3190 recycle asphalt concrete 1.9 mm super	TN	2,107	81.96	172,690.54			
402-1812 recycle asphalt concrete leveling	TN	4,214	75.00	316,052.25			
Subtotal				1,508,015.96			
Markup (%) at 11%				165,882.00			
TOTAL				1,673,897.96			
PAVEMENT REDUCTION THIS SECTION							
310-5100 GAB, 10 inches	SY				21,070.00	16.00	337,120.00
402-3121 recycle asphalt concrete, 25 mm super pave	TN				5,267.53	75.00	395,064.75
Subtotal							732,184.75
Markup (%) at 11%							80,540.00
TOTAL							812,724.75
RIGHT-OF-WAY REDUCTION	7,183 ft. x 15 ft. = 107,745 SF x .684SF = $73,266.6 x 2.15 (MU) =						157,523.19
					TOTAL REDUCTION		970,247.94
					ROADWAY ITEM BREAKDOWN		
							1,673,898.00
						signal	150,000.00
RELOCATION 1 @ $86,000							1,823,898.00
						relocation	86,000.00
SIGNAL - NEW INSTALLATION $150,000						additional	1,909,898.00
						reduction	-970,247.94
TOTAL SAVINGS							939,650.06

VALUE ENGINEERING ALTERNATIVE

PROJECT: **SR 144 WIDENING FROM CR 100 TO CR 154** ALTERNATIVE NO.:**S-1**
Project No. STP00-0630-00(010) Bryan County, Georgia
Preliminary Submittal

DESCRIPTION: **USE SINGLE 10-FT. MULTI-USE TRAIL IN LIEU OF TWO 4-FT. BIKE LANES IN ROADWAY** SHEET NO.: **1 of 6**

ORIGINAL DESIGN: (sketch attached)

The current design has two 4-ft. bike lanes (one in each direction) in the roadway along with 5-ft.-wide sidewalks on both shoulders.

ALTERNATIVE: (sketch attached)

Eliminate the sidewalks and use a single 10-ft.-wide multi-use trail in lieu of the two 4-ft.-wide bike lanes. The path could be placed on the east side of the road.

ADVANTAGES:

- Reduces construction cost

DISADVANTAGES:

- Should be safer to move bike roadway except at side street crossings
- More right-of-way cost

DISCUSSION:

SR 144 is in the state bicycle plan; therefore, bicycle accommodations should be provided in any future reconstruction or widening. Bicycle lanes in the roadway are almost always more expensive than trails since the roadway bicycle lanes have a full-depth pavement section (designed for trucks.) The typical pavement section for multi-use trails is two-inch asphaltic concrete with four inches of GAB. It is important to empathize that the multi-use trail (10-ft. wide for two-way traffic) would replace two 5-ft. sidewalks. One 10-ft. multi-use path (two-way) would be reduced by the number of side road crossings (only on one side of SR 144).

The amount of additional right-of-way computed for the alternate design would be the maximum amount; therefore, it is very possible less right-of-way could be required by tightening the right-of-way and also the lay of the surrounding terrain.

There was a previous GDOT study with an 8-ft.-wide multi-use trail that was not cost-effective. However, the GDOT study typical section had 5-ft.-wide sidewalks on both sides of the roadway and also an 8-ft.-wide multi-use trail. The alternate design typical would only use a single 10-ft.-wide multi-use trail in lieu of both sidewalks and the 8-ft.-wide multi-use trail. The "reduced" alternate typical section would reduce the construction cost significantly.

COST SUMMARY	INITIAL COST	PRESENT WORTH RECURRING COSTS	PRESENT WORTH LIFE-CYCLE COST
ORIGINAL DESIGN	$ 2,145,649	—	$ 2,145,649
ALTERNATIVE	$ 1,007,139	—	$ 1,007,139
SAVINGS (Original minus Alternative)	$ 1,138,510	—	$ 1,138,510

Sketch Alt. S-1

Original Design 2/6

STATE	PROJECT NUMBER	SHEET NO.	TOTAL SHEETS
GA			

PROPOSED TYPICAL
FROM BEG. PROJECT TO SR 144 SPUR

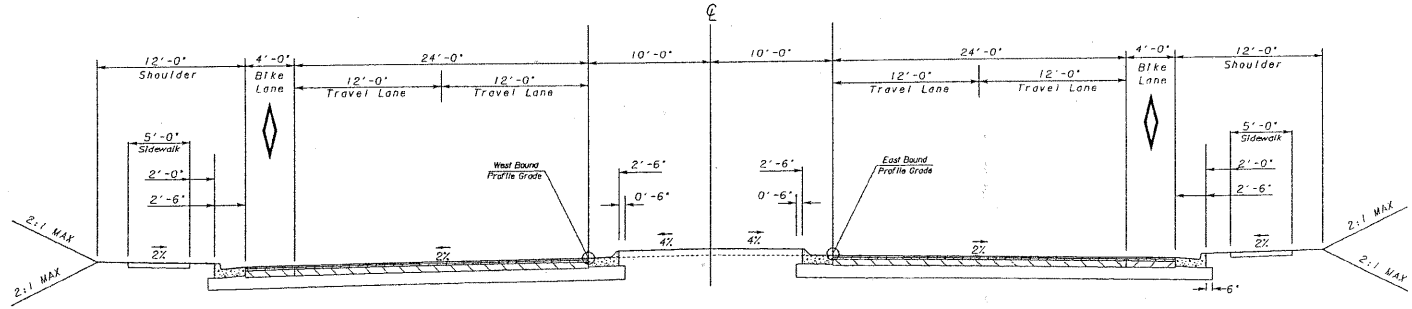

PROPOSED TYPICAL
FROM SR 144 SPUR TO END OF PROJECT

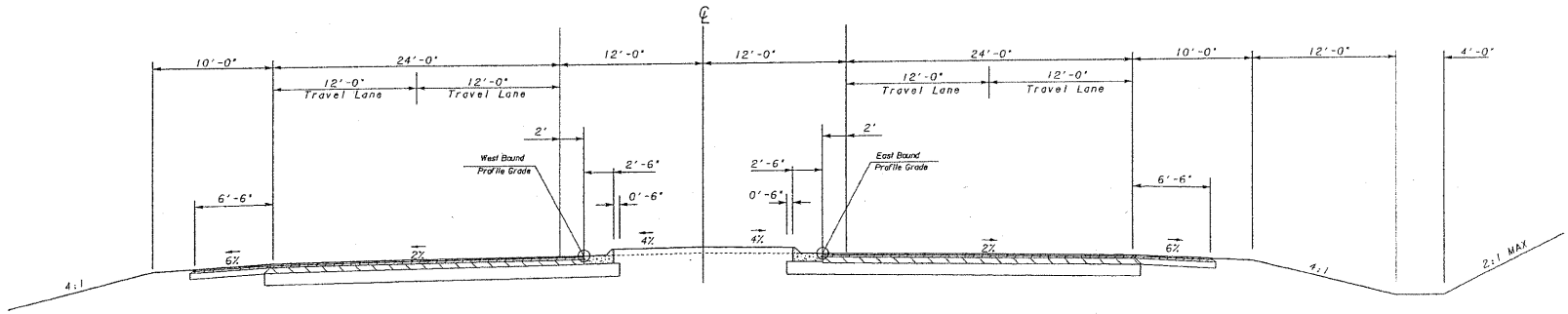

REVISION DATES		

STATE OF GEORGIA
DEPARTMENT OF TRANSPORTATION

OFFICE:

TYPICAL SECTIONS

DRAWING NO. 5-1

Sketch Alt. S-1

Alternate Design 3/6

STATE	PROJECT NUMBER	SHEET NO.	TOTAL SHEETS
GA			

Alternate Design TYPICAL
FROM BEG. PROJECT TO SR 144 SPUR

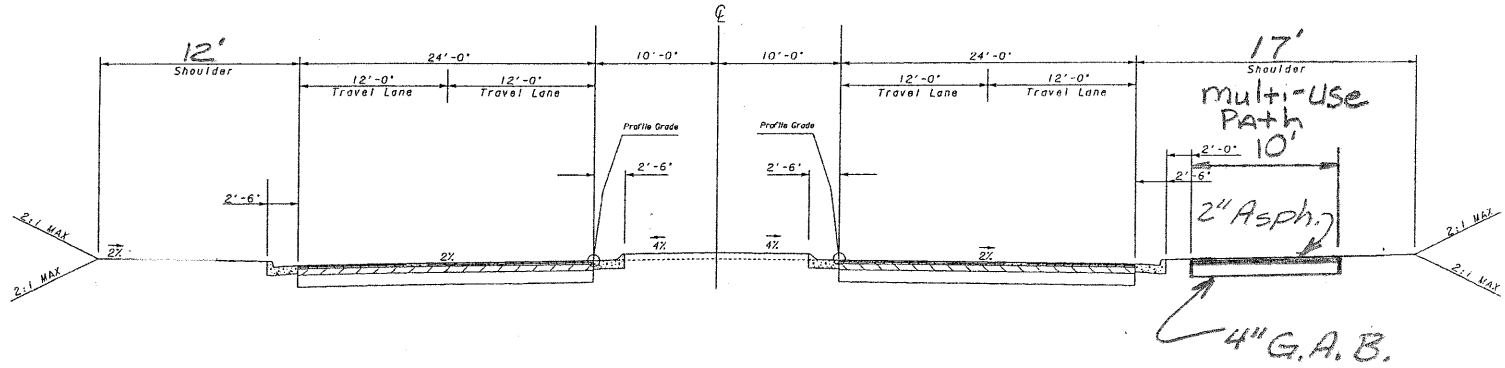

(EAST SIDE)

Alternate Design TYPICAL
FROM SR 144 SPUR TO END OF PROJECT

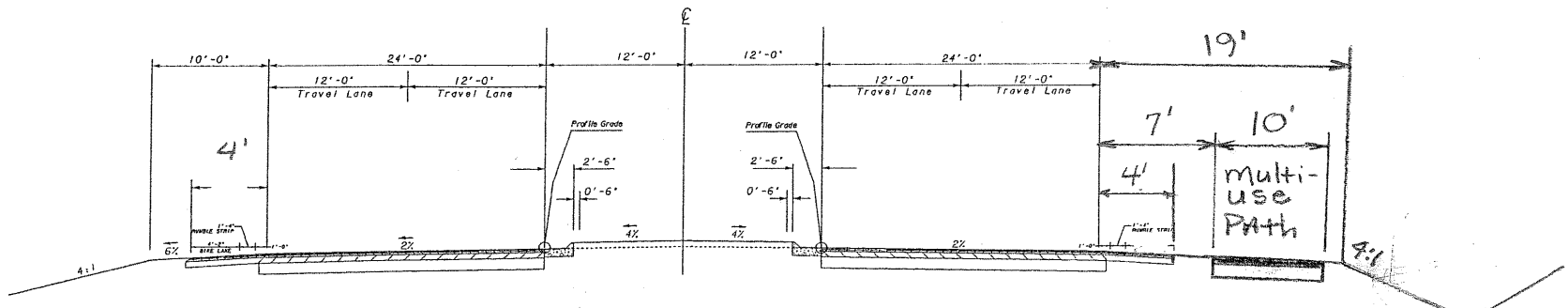

Not to Scale (EAST)

REVISION DATES	STATE OF GEORGIA DEPARTMENT OF TRANSPORTATION
	OFFICE:
	TYPICAL SECTIONS
	5-5

PROJECT: **SR 144 WIDENING FROM CR 100 TO CR 154**
Project No. STP00-0630-00(010) - Bryan County, Georgia
Preliminary Submittal

ALTERNATIVE NO.: S-1

SHEET NO.: 4 of 6

Alternate Costs:

$$\text{Path} = \frac{10' \times [(4.93\text{mi} \times 5{,}280) - (320' + 120')]}{9\text{sf/sy}} = 28{,}434\text{sy}$$

Additional R/W for 10' multi-use + Rail

Urban Section: 5' additional R/W

Sta 15+00 to Sta 214+50:

$$\frac{19{,}950' \times 5'}{43{,}560\text{sf/ac}} = 2.29\text{ ac} \leftarrow$$

Rural Section: 7' additional R/W

Sta 214+50 to Sta. 275+00:

$$\frac{6{,}050' \times 7'}{43{,}560\text{sf/ac}} = 0.972\text{ ac} \leftarrow$$

3.262 ac (total add'l R/W)

10' multi-use Path Pavement Section Unit Cost ($/sy):

2" Asph. Conc. $\times \frac{110\#}{\text{sy-in}} \times \frac{1}{2000} \times \$94/T = \$10.34/\text{sy}$

4" GAB $(.4 \times \$16.46/\text{sy}) = \$6.58/\text{sy}$

Pavem't multi-use unit cost: $16.92/sy

Add'l Earthwork (Borrow): $\frac{2'_{Avg} \times 5' \times 19{,}950'}{27\text{cf/cy}} = 7{,}389\text{ cy}$

$\frac{2'_{Avg} \times 7' \times 6{,}050'}{27\text{cf/cy}} = 3{,}137\text{ cy}$

Total Add'l Borrow = 10,526 cy

PROJECT: **SR 144 WIDENING FROM CR 100 TO CR 154**
Project No. STP00-0630-00(010) - Bryan County, Georgia
Preliminary Submittal

ALTERNATIVE NO.: S-1

SHEET NO.: 5 of 6

Original Cost for Comparison to Alternate:
2 Bike Lanes (4') from sta 15+00 to 216+00

$$\frac{20{,}100' \times 2 \text{ sides} \times 4'}{9 \text{ sf/sy}} = 17{,}867 \text{ sy}$$

2 Bike provisions/accommodations on 6.5' shldr on Rural SR144 Section from sta 216+00 to 275+00
6.5' Original paved shldr versus 4' Alternate Paved shldr.

Add'l cost for 6.5' shldr (Paved) versus 4' shldr - Rural (Paved)

$$\frac{(6.5' - 4.0') \times 2 \text{ sides} \times (275{+}00 - 216{+}00)}{9 \text{ sf/sy}} = 3{,}278 \text{ sy}$$

unit cost for shldr pavement: $26.68/sy (see Alt. A-3 for calculations)

Sidewalks (sta 15+00 to 216+00)

$$\frac{(20{,}100 - 440') \times 2 \text{ sides} \times 5'}{9 \text{ sf/sy}} = 21{,}844 \text{ sy (sidewalks)}$$

use $30.14/sy from 2008 Item Means

Recommend that Alternate B Bridge Remains same width as "Original" Current proposed bridge with the Multi-use shldr using the 8' (paved bikelanes) for 16' see attached proposed bridge sketch.

COST WORKSHEET

PROJECT: **SR 144 WIDENING FROM CR 100 TO CR 154**
Project No. STP00-0630-00(010) Bryan County, Georgia
Design Development Stage

ALTERNATIVE NO.: **S-1**

SHEET NO.: **6 of 6**

PROJECT ITEM		ORIGINAL ESTIMATE			ALTERNATE ESTIMATE		
ITEM	UNITS	NO. OF UNITS	COST/ UNIT	TOTAL	NO. OF UNITS	COST/ UNIT	TOTAL
Alt. costs:							
10-ft. multi-use trail							
Pavement	SY				28,434	16.92	481,103
Additional earthwork	CY				15,790	15.00	236,850
Additional right-of-way (alt.)	AC				3.262	30,000.00	97,860
Original costs:							
4-ft. full depth pavement bike lanes	SY	17,867	59.11	1,056,118			
Bike lanes on rural shoulder	SY	3,278	26.68	87,457			
Sidewalks (2 sides)	SY	21,844	36.14	789,442			
Right-of-way subtotal							97,860
Right-of-way markup 115%							112,539
Subtotal				1,933,017			717,953
Markup (%) at 11%				212,632			78,975
TOTAL				2,145,649			1,007,327

VALUE ENGINEERING ALTERNATIVE

PROJECT: **SR 144 WIDENING FROM CR 100 TO CR 154**
Project No. STP00-0630-00(010) Bryan County, Georgia
Preliminary Submittal

ALTERNATIVE NO.: **S-2**

DESCRIPTION: **USE 11-FT. LANES ON INSIDE AND 12-FT. LANES ON OUTSIDE**

SHEET NO.: **1 of 4**

ORIGINAL DESIGN:

Widen SR 144 to four 12-ft. lanes with a raised median.

ALTERNATIVE: (sketch attached)

Widen SR 144 to four lanes with the two inside lanes being 11ft. wide and the two outside lanes being 12 ft. wide.

ADVANTAGES:

- Less construction cost
- Slightly less right-of-way cost in certain areas

DISADVANTAGES:

- Perceived to be less safe

DISCUSSION:

The alternate design proposes to keep 12-ft. lanes on the outside for truck traffic since it is adjacent to a bicycle lane. If bicycle lanes are removed from the roadway travel lanes, then two 11 ft. lanes should be considered for cost savings.

Even though this alternative reduces the roadway width by only two feet, it could still reduce right-of-way impacts in any negatively impacted areas (e.g., wetlands).

COST SUMMARY	INITIAL COST	PRESENT WORTH RECURRING COSTS	PRESENT WORTH LIFE-CYCLE COST
ORIGINAL DESIGN (savings)	$ 539,112	—	$ 539,112
ALTERNATIVE	$ 0	—	$ 0
SAVINGS (Original minus Alternative)	$ 539,112	—	$ 539,112

Sketch S-2
2/4
Alternate Design

Tue Sep 02 11:13:26 2008	\\pdot-csnl\geofg\resources\Gde1200T_Kip.161	J:\DESIGN\532370\DGN\532370TYPS.dgn	STATE GA	PROJECT NUMBER	SHEET NO.	TOTAL SHEETS

Alternate Design TYPICAL
FROM BEG. PROJECT TO SR 144 SPUR

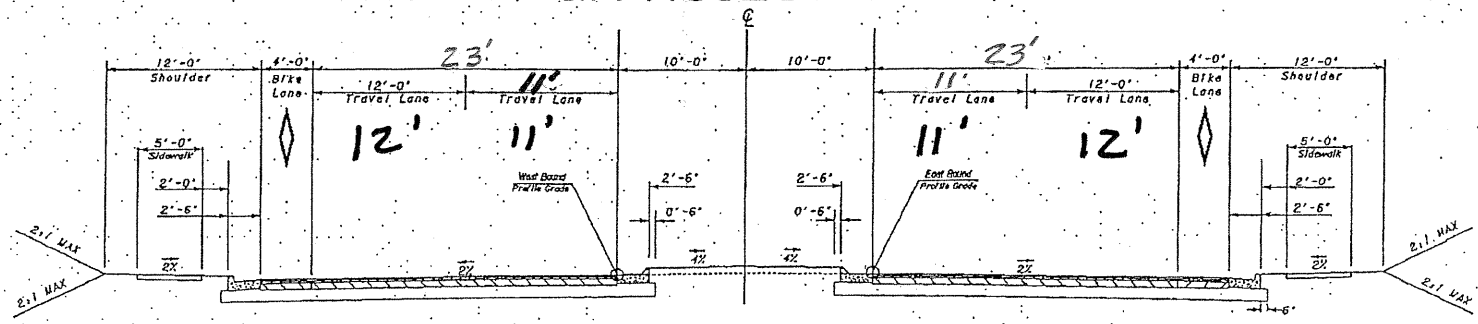

Alternate Design TYPICAL
FROM SR 144 SPUR TO END OF PROJECT

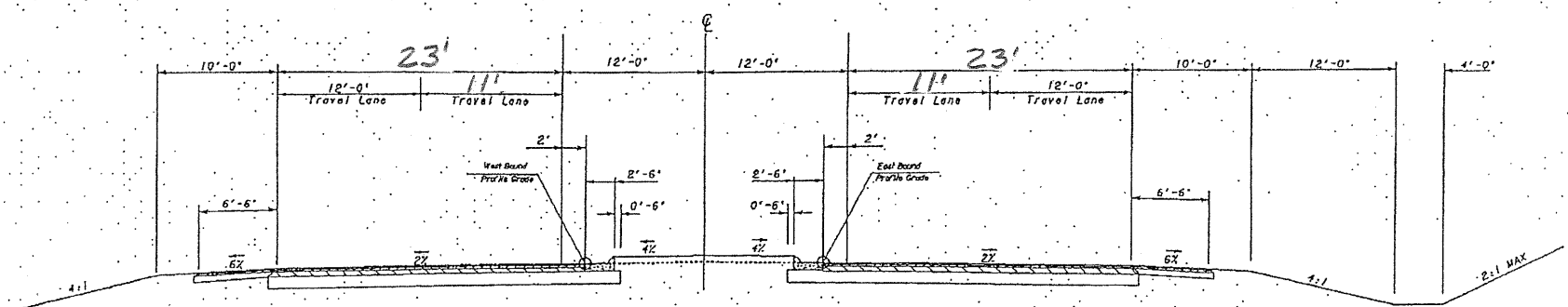

11' inside Lanes in Lieu of Current Proposed 12' Lanes

REVISION DATES	STATE OF GEORGIA DEPARTMENT OF TRANSPORTATION
	OFFICE:
	TYPICAL SECTIONS
	DRAWING No. 5-1

PROJECT: **SR 144 WIDENING FROM CR 100 TO CR 154**
Project No. STP00-0630-00(010) - Bryan County, Georgia
Preliminary Submittal

ALTERNATIVE NO.: S-2

SHEET NO.: 3 of 4

Original Costs saved:

$$\frac{(1'+1') \times 26{,}000'}{9\,sf/sy} = 5{,}778\ s.y.$$

R/W (saved): $\frac{(1'+1') \times 26{,}000'}{43{,}560\,SF/AC} = 1.19\,AC$ [SAVES 2-FEET OF R/W]

saved Grading (Borrow)

$$\frac{2'}{100'} = .02 = 2\%$$

$250{,}000\,cy \times .02 = 5{,}000\,c.y.$

COST WORKSHEET

PROJECT: **SR 144 WIDENING FROM CR 100 TO CR 154**
Project No. STP00-0630-00(010) Bryan County, Georgia
Design Development Stage

ALTERNATIVE NO.: **S-2**

SHEET NO.: **4 of 4**

PROJECT ITEM		ORIGINAL ESTIMATE			ALTERNATE ESTIMATE		
ITEM	UNITS	NO. OF UNITS	COST/ UNIT	TOTAL	NO. OF UNITS	COST/ UNIT	TOTAL
Saved pavement	SY	5,778	59.11	341,538			
Saved borrow	CY	5,000	15.00	75,000			
Saved right-of-way	AC	1.19	30,000.00	35,700			
Construction Subtotal				416,538			
Markup (%) at 11%				45,819			
Right-of-Way Subtotal				35,700			
Markup (%) at 115%				41,055			
TOTAL				539,112			

VALUE ENGINEERING ALTERNATIVE

PROJECT: **SR 144 WIDENING FROM CR 100 TO CR 154** ALTERNATIVE NO.:**S-4**
Project No. STP00-0630-00(010) Bryan County, Georgia
Preliminary Submittal

DESCRIPTION: **USE 18-FT. RAISED MEDIAN IN LIEU OF 20-FT. AND 24-FT. PROPOSED GRASSED MEDIAN** SHEET NO.: **1 of 3**

ORIGINAL DESIGN:

The original design uses both a 20-ft. and 24-ft. grassed median.

ALTERNATIVE:

Separate traffic using an 18-ft.-wide raised concrete median.

ADVANTAGES:

- Reduces general maintenance/operations costs
- Reduces right-of-way and cost

DISADVANTAGES:

- Increases construction cost

DISCUSSION:

Using a narrower, concrete raised median will aid in reducing general maintenance/operational cost over the life of the project. Conversely, by incorporating a raised concrete median will increase the cost of construction. The reduced median will also aid in reducing right-of-way impacts and cost.

COST SUMMARY	INITIAL COST	PRESENT WORTH RECURRING COSTS	PRESENT WORTH LIFE-CYCLE COST
ORIGINAL DESIGN	$ 287,679	—	$ 287,679
ALTERNATIVE	$ 0	—	$ 0
SAVINGS (Original minus Alternative)	$ 287,679	—	$ 287,679

CALCULATIONS

PROJECT: **SR 144 WIDENING FROM CR 100 TO CR 154**
Project No. STP00-0630-00(010) - Bryan County, Georgia
Preliminary Submittal

ALTERNATIVE NO.: 3-4

USE 18' RAISED CONCRETE MEDIAN IN LIEU OF 20' & 24' PROPOSED GRASSED

SHEET NO.: 2 of 3

R.O.W. REDUCTION @30 SY

2' × 26,000.00 = 52,000.00 SF

2 × 26,000 = 52,000/9 = 5777.78 (0.10) = 577.78 + 5,777.78 = 6,356 SY

COST WORKSHEET

PROJECT: **SR 144 WIDENING FROM CR 100 TO CR 154**
Project No. STP00-0630-00(010) Bryan County, Georgia
Design Development Stage

ALTERNATIVE NO.: **S-4**

SHEET NO.: **3 of 3**

PROJECT ITEM		ORIGINAL ESTIMATE			ALTERNATE ESTIMATE		
ITEM	UNITS	NO. OF UNITS	COST/ UNIT	TOTAL	NO. OF UNITS	COST/ UNIT	TOTAL
Concrete median, 6 in.	SY	6,356	30.00	190,680			
(increased cost)							
Right-of-way reduction							
2' x 26,000 = 52,000 SF x .68 $/sf = $35,360.00 x 2.15 = $76,024.00				76,024			
Subtotal				266,704			
Markup (%) at 11%				20,975			
TOTAL				287,679			

SUMMARY OF POTENTIAL COST SAVINGS

PROJECT: **SR 144 WIDENING FROM CR 100 TO CR 154**

Project: STP00-0630-00(010), Bryan County, Georgia

ALT. NO.	DESCRIPTION	ORIGINAL COST	ALTERNATIVE COST	PRESENT WORTH OF COST SAVINGS: INITIAL COST SAVINGS	PRESENT WORTH OF COST SAVINGS: RECURRING COST SAVINGS	PRESENT WORTH OF COST SAVINGS: TOTAL PW LCC SAVINGS
SECTION (S) (cont.)						
S-5	Use concrete paved median in lieu of grassed median and eliminate the mowing over the next 30 years.	$26,640	$1,502,629	($1,475,989)	$1,486,041	$10,052
S-6	Use a Tensar type geogrid reinforcement and reduce the amount of base material from 5 inches to 2.5 inches.	$5,776,668	$4,941,837	$834,831		$834,831
S-7	Use 24-in. wide curb and gutter section in lieu of 30-in.-wide section	$1,613,384	$1,427,270	$186,114		$186,114
S-8	Place the sidewalk on one side of the road only. Put the sidewalk on the West side.	$516,257	0	$516,257		$516,257
S-9	Reduce the width of shoulders from 12ft to 10ft at locations without sidewalks.	$8,600,000	$8,523,605	$76,395		$76,395
S-11	Use two lanes with a raised grass median in lieu of four and retain the existing bridge. Purchase all required R/W, but defer the major improvements.	$11,536,274	$842,944	$10,693,330		$10,693,330
S-12	Use more ditches and less curb and gutter on the East side only; assume a 4-lane section.	$1,322,845		$1,322,845		$1,322,845
BRIDGE (B)						
B-1	Reduce the median on the bridge from 20 ft to 8 ft and taper the median on either side of the bridge.	$955,843	$831,168	$124,675		$124,675
B-2	Build a new parallel bridge in lieu of widening the existing bridge. Reduce the area of the bridge.	$955,843	$485,714	$470,129		$470,129
B-3	Add a sidewalk on only the west side of the bridge (new construction side). Do not add sidewalk on the existing bridge.	$15,672		$15,672		$15,672

VALUE ENGINEERING ALTERNATIVE

PROJECT: **SR 144 WIDENING FROM CR 100 TO CR 154** ALTERNATIVE NO.:**S-5**
Project No. STP00-0630-00(010) Bryan County, Georgia
Preliminary Submittal

DESCRIPTION: **USE CONCRETE PAVED MEDIAN IN LIEU OF GRASS** SHEET NO.: **1 of 5**

ORIGINAL DESIGN:

The current design typical section uses a grassed median.

ALTERNATIVE: (sketch attached)

Replace the proposed grassed median with a concrete paved median for maintenance purposes.

ADVANTAGES:

- Less maintenance cost for roadway lifecycle cost savings
- Easier for emergency vehicles to transverse median

DISADVANTAGES:

- Increases construction cost

DISCUSSION:

The current design proposes to grass the raised median. Because of the reduction in maintenance forces, it would be advantageous for GDOT to implement procedures to reduce roadway maintenance. The cost in savings would be in the life cycle costs of maintaining the roadway. Mowing the grass on a 20-ft. raised median would be a tenuous process due to the "cramped" area and traffic on both sides of the median. Mowing this type of median is a safety hazard and requires more temporary traffic control to "protect" maintenance workers who are mowing the median.

COST SUMMARY	INITIAL COST	PRESENT WORTH RECURRING COSTS	PRESENT WORTH LIFE-CYCLE COST
ORIGINAL DESIGN	$ 26,640	$ 1,486,041	$ 1,512,681
ALTERNATIVE	$ 1,502,269	$ 0	$ 1,502,629
SAVINGS (Increase)	$ (1,475,989)	$ 1,486,041	$ 10,052

Sketch Alt. S-5 2/5

Tue Sep 02 11:15:26 2008 | \\pdot-csnl\geofg\resources\Gdot2007_Kip.tbl | J:\DESIGN\532370\DGN\532370TYPS.dgn

STATE	PROJECT NUMBER	SHEET NO.	TOTAL SHEETS
GA			

TYPICAL
FROM BEG. PROJECT TO SR 144 SPUR

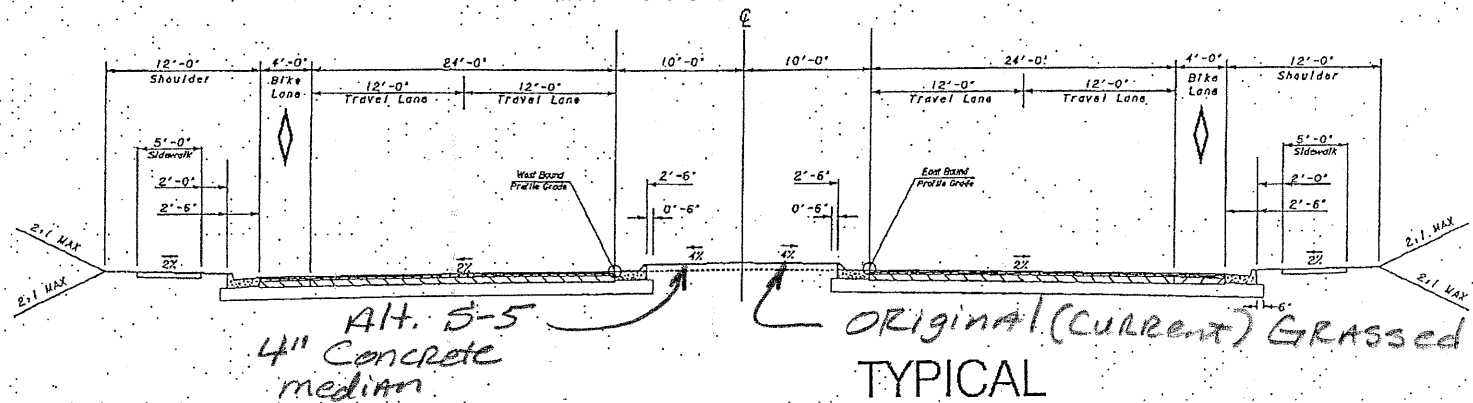

TYPICAL
FROM SR 144 SPUR TO END OF PROJECT

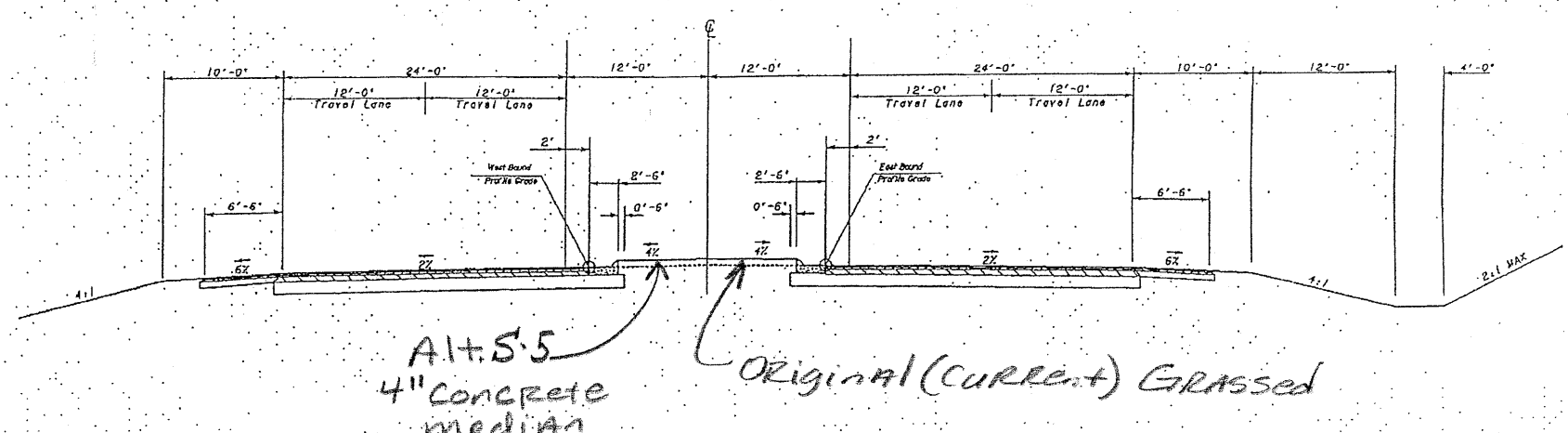

REVISION DATES		

STATE OF GEORGIA
DEPARTMENT OF TRANSPORTATION
OFFICE:
TYPICAL SECTIONS

DRAWING No. 5-1

CALCULATIONS

PROJECT: **SR 144 WIDENING FROM CR 100 TO CR 154**
Project No. STP00-0630-00(010) - Bryan County, Georgia
Preliminary Submittal

ALTERNATIVE NO.: S-5

SHEET NO.: 3 of 5

Median Area to be paved or grassed:

(20'-5') = 15'

$$\left(\frac{15' \times 20{,}100'}{9 sf/sy} + \frac{19' \times 5{,}900'}{9 sf/sy}\right) - \left(\frac{440' \times 17'}{9 sf/sy}\right) = 45{,}124 sy$$

(x-Rds)

Unit cost for (concrete median pavement 4") = $30/sy
PAY item 441-0740

Unit cost for grassing median = $1,000/ac

Grassing Area in Acres $\frac{406{,}120 SF}{43{,}560 SF/AC} = 10$ AC

Temporary grassing ($700/ac) + Permanent Grassing ($1,100/ac) + ($600/ac) Lime, fertilizers, Nitrogen, ect. = $2,400/ac

COST WORKSHEET

PROJECT: **SR 144 WIDENING FROM CR 100 TO CR 154**
Project No. STP00-0630-00(010) Bryan County, Georgia
Design Development Stage

ALTERNATIVE NO.: **S-5**

SHEET NO.: **4 of 5**

PROJECT ITEM		ORIGINAL ESTIMATE			ALTERNATE ESTIMATE		
ITEM	UNITS	NO. OF UNITS	COST/ UNIT	TOTAL	NO. OF UNITS	COST/ UNIT	TOTAL
Grassed Island:							
Grassing	AC	10	2,400.00	24,000			
Concrete median pavement 4 inch	SY				45,124.000	30.00	1,353,720
Construction Subtotal				24,000			1,353,720
Markup (%) at 11%				2,640			148,909
TOTAL				26,640			1,502,629

LIFE CYCLE COST WORKSHEET

PROJECT: **SR 144 WIDENING FROM CR 100 TO CR 154**
Project No. STP00-0630-00(010) - Bryan Co., Georgia

ALTERNATIVE NO.: **S-5**

SHEET NO.: 5 of 5

LIFE CYCLE PERIOD: 30 years
INTEREST RATE: 3.10% ESCALATION RATE:

		ORIGINAL	PROPOSED
A.	INITIAL COST	26,640	1,502,629
	Useful Life (Years)		
	INITIAL COST SAVINGS		(1,475,989)
B.	RECURRENT COSTS (Annual Expenditures)		
	1. Maintenance - Mowing Grass (24/yr x 8hrs/day x 4 people x 4 days x $25/hr)	76,800	
	2. Operating		
	3. Energy		
	4.		
	5.		
	6.		
	Total Annual Costs	76,800	-
	Present Worth Factor	19.3495	19.3495
	Present Worth of RECURRENT COSTS	1,486,041	-

C. SINGLE EXPENDITURES			Year	Amount	PW factor	Present Worth	Present Worth
ORIG	PROP	< Put "x" in appropriate box (original design or proposed design)					
		1.			1.0000	-	-
		2.			1.0000	-	-
		3.			1.0000	-	-
		4.			1.0000	-	-
		5.			1.0000	-	-
		6.			1.0000	-	-
		7.			1.0000	-	-
		8.			1.0000	-	-

D. SALVAGE VALUE			Year	Amount	PW factor	Present Worth	Present Worth
		1.			(1.0000)	-	-
		2.			(1.0000)	-	-
		Present Worth of SINGLE EXPENDITURES				-	-

E.	Total Recurrent Costs & Single Expenditures (B + C + D)	1,486,041	-
	RECURRENT COSTS & SINGLE EXPENDITURES SAVINGS		1,486,041
	TOTAL PRESENT WORTH COST (A + E)	1,512,681	1,502,629
	TOTAL LIFE CYCLE SAVINGS		**10,052**

VALUE ENGINEERING ALTERNATIVE

PROJECT: **SR 144 WIDENING FROM CR 100 TO CR 154** ALTERNATIVE NO.:**S-6**
Project No. STP00-0630-00(010) Bryan County, Georgia
Preliminary Submittal

DESCRIPTION: **USE GEOGRID IN THE PAVEMENT SECTION AND REDUCE THE DEPTH OF BASE MATERIAL** SHEET NO.: **1 of 8**

ORIGINAL DESIGN: (sketch attached)

The current pavement section is as follows:

1.25 inches – Wearing Course

2 inches – Binder

5 inches Base

10 inches GAB

ALTERNATIVE: (sketch attached)

Add Tensar geogrid fabric to the section and reduce the base from 5 inches to 2.5 inches.

ADVANTAGES:

- Reduces amount of base required
- Saves cost

DISADVANTAGES:

- Requires modified section

DISCUSSION:

The use of geofabrics is a proven method of optimizing pavement sections and has proven advantages in pavement longevity.

COST SUMMARY	INITIAL COST	PRESENT WORTH RECURRING COSTS	PRESENT WORTH LIFE-CYCLE COST
ORIGINAL DESIGN	$ 5,776,668	–	$ 5,776,668
ALTERNATIVE	$ 4,941,837	–	$ 4,941,837
SAVINGS (Original minus Alternative)	$ 834,831	–	$ 834,831

ALT. NO.
S-6
Sht. 2 of 8

CONTECH®
CONSTRUCTION PRODUCTS INC.

December 8, 2008

Delon Hampton & Associates, Chartered
229 Peachtree Street, NE
International Towers
Suite 1510
Atlanta, GA 30303

Attn: Harley Griffin

RE: **Proposed Geogrid Alternate for GDOT**

Thank you for the opportunity to provide you with an alternate pavement section. I am pleased to offer you this suggestion for utilizing geogrid in the construction of the pavement for the GDOT project located in Byron, Georgia. The suggestion is based on the following assumptions:

1.) Any large organic material encountered will be removed to prevent future decay.

2.) The proposed section is designed to provide an equivalent pavement section to the GDOT design section of:
   a. GDOT Pavement Section
      i. 10" Graded Aggregate Base (GAB)
      ii. 5" Base Course Asphalt (25mm SP)
      iii. 2" Binder Course Asphalt (19mm SP)
      iv. 1.25" Wearing Course Asphalt (9.5mm SP)

3.) An assumed subgrade CBR value of 3.3% was converted to Subgrade Resilient Modulus (expressed in psi) using the following formula:
   a. $M_r = 1500 * CBR$

4.) The analysis was performed by inputting the proposed pavement section into the Standard Method Base Reinforcement module of the SpectraPave3 Software v3.11, copyright 1998-2007 Tensar International Corporation, Inc. to determine approximately equivalent sections utilizing Tensar biaxial geogrid within the pavement sections. The software is utilized for the design of flexible pavements in full accordance with the requirements of the AASHTO (1993) guidelines. The user is able to determine the benefits of using Tensar geogrids to reinforce the unbound aggregate layers within the pavement.

ALT. NO.
S-6
Sht 3 of 8

5.) The values in the following tables were utilized in this analysis.

Material	Structural Coefficient
Asphalt Wearing Course (9.5mm SP)	0.44
Asphalt Binder Course (19mm SP)	0.44
Asphalt Base Course (25mm SP)	0.40
Graded Aggregate Base Course	0.14
Tensar TX160 geogrid	n/a
Reliability, %	95
Standard Deviation	0.49
Initial Serviceability	4.2
Terminal Serviceability	2.0
Subgrade Resilient Modulus	5,000 psi

Material	Installed Unit Cost
Asphalt Surface Mix	$85.00/ton
Asphalt Base Mix	$85.00/ton
Graded Aggregate Base	$25.65/ton ($16/10")
Tensar TX160 geogrid	$5.25/sy

Based on these assumptions, CONTECH offers the following suggestions:

Here are representations of the current design section:

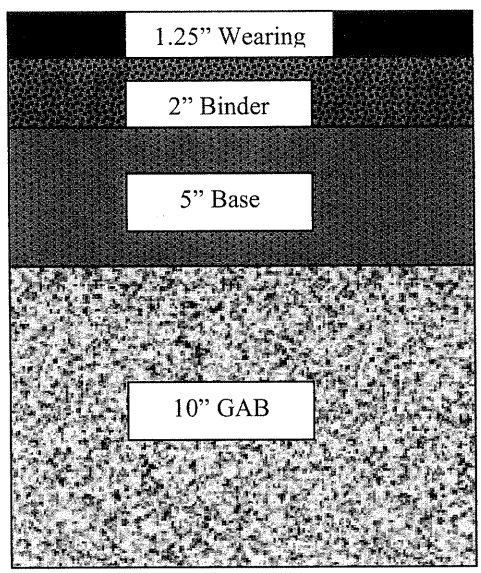

Design Section – 2,669,000 ESAL

ALT. NO. S-6 Sht. 4 of 8

The preceding diagram illustrates the current design section and its predicted performance. I suggest that one the following geogrid section be used throughout the pavement areas:

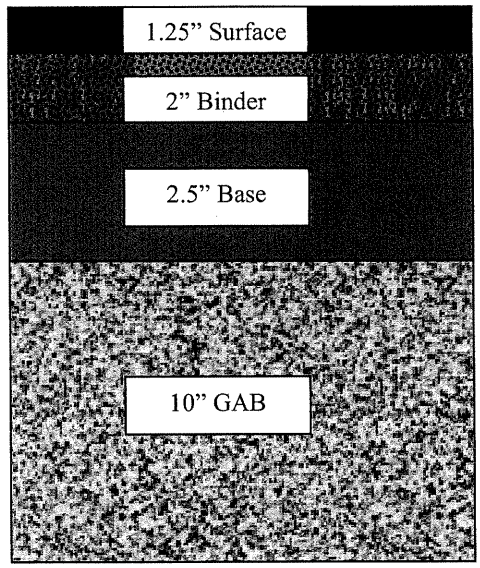

Tensar TX160 – 3,630,000 ESAL

Triaxial Geogrid	Original Section	TX160 Geogrid
Wearing Course	1.25	1.25
Binder Course	2	2
Base Course	5	2.5
Aggregate Base	10	10
Geogrid	n/a	TX160
Calculated ESAL's	2,669,000	3,630,000
Unit Cost	$63.66/sy	$54.46/sy

The Tensar TX160 geogrid will allow for a reduction of 2-½ inches of base course asphalt for the pavement section and **decreases the cost of the pavement by $9.20/sy** while providing a 36% increase in estimated design traffic capacity of the pavement.

The use of the Tensar triaxial geogrid reduces the lift thickness of the base course asphalt to 2.5 inches, which allows for that layer to be placed and compacted in one lift. This should also reduce the time of construction for the project by reducing compaction and placement time of asphalt by approximately 25 percent.

The use of the geogrid increases the level of compaction throughout the aggregate base layer by confining the aggregate during the compaction process. Instead of utilizing the subgrade soils to provide a platform to compact against, the grid "locks in" the aggregate, allowing the bottom of the aggregate layer to be utilized as a platform to compact the top of the aggregate layer against it. Thus, the aggregate layer is being compacted from the

ALT. NO. S-6 Sht. 5 of 8

bottom up and the top down; effectively increasing the level of compaction throughout the section.

The use of geogrid will also separate the aggregate base from the underlying subgrade soils. By interlocking the base, the geogrid provides lateral confinement of the stone which will prevent the subgrade soils from contaminating the base stone. The base stone will therefore maintain its thickness throughout the life of the pavement, providing additional life to the pavement.

Please note that CONTECH is a material supplier, and as such, should not be considered as the engineer-of-record for the project. Any variation from the approved project plans and specifications should be approved by the owner and the engineer-of-record prior to installation.

CONTECH is glad to offer this construction suggestion. Installation is very simple and an Installation Guide can be provided. In addition, CONTECH personnel are available to be on-site during the initial installation if requested. Please note that CONTECH's personnel will need sufficient notice prior to the start of construction so that proper clearances can be obtained. Proper overlap is needed and will be determined by the subgrade conditions, although it is anticipated that 1 foot of overlap will be required on these projects. If you need any further information or have questions concerning our suggestions, please call me at 404-969-7505.

Regards,

David L. Richardson

David L. Richardson, P.E.
Regional Tensar Specialist

CONTECH
CONSTRUCTION PRODUCTS INC.

Attachments - Calculations

ALT. NO. S-6 Sht. 6 of 8

Calculations

Original Design

AASHTO Design Equation for Estimating Pavement Life (1993):

$$\log_{10}(W_{18}) = \left\{ Z_R(S_0) + 9.36\log_{10}(SN+1) - 0.20 + \frac{\log_{10}\left[\frac{\Delta PSI}{4.2-1.5}\right]}{0.40 + \frac{1094}{(SN+1)^{5.19}}} + 2.32\log_{10}(M_R) - 8.07 \right\}$$

$$(W_{18})_R = W_{18}(TBR)$$

where,

W_{18} = Equivalent 18-kip Single Axle Loads (ESALs)
Z_R = Standard Normal Deviate (based on Reliability Level, R)
S_0 = Standard Deviation
SN = Structural Number
ΔPSI = Difference between terminal and initial serviceability indices
M_R = Resilient Modulus of Subgrade
$(W_{18})_R$ = Reinforced ESALs Due to Geogrid
TBR = Traffic Benefit Ratio

Variables	Value
Z_R	-1.645
S_0	0.49
SN	4.72
ΔPSI	2.2
$M_{R,\ psi}$	5,000

$$\log_{10}(W_{18}) = \left\{ -1.645(0.49) + 9.36\log_{10}(4.72+1) - 0.20 + \frac{\log_{10}\left[\frac{2.2}{4.2-1.5}\right]}{0.40 + \frac{1094}{(4.72+1)^{5.19}}} + 2.32\log_{10}(5000) - 8.07 \right\}$$

$$W_{18} = 2{,}669{,}249 \text{ ESALs}$$

ALT. NO. S-6 Sht. 7 of 8

Triaxial Geogrid Design

AASHTO Design Equation for Estimating Pavement Life (1993):

$$\log_{10}(W_{18}) = \left\{ Z_R(S_0) + 9.36\log_{10}(SN+1) - 0.20 + \frac{\log_{10}\left[\frac{\Delta PSI}{4.2-1.5}\right]}{0.40 + \frac{1094}{(SN+1)^{5.19}}} + 2.32\log_{10}(M_R) - 8.07 \right\}$$

$$(W_{18})_R = W_{18}(TBR)$$

where,

W_{18} = Equivalent 18-kip Single Axle Loads (ESALs)
Z_R = Standard Normal Deviate (based on Reliability Level, R)
S_0 = Standard Deviation
SN = Structural Number
ΔPSI = Difference between terminal and initial serviceability indices
M_R = Resilient Modulus of Subgrade
$(W_{18})_R$ = Reinforced ESALs Due to Geogrid
TBR = Traffic Benefit Ratio

Variables	Value
Z_R	-1.645
S_0	0.49
SN	3.83
ΔPSI	2.3
$M_{R,\ psi}$	5,000
TBR, Tensar TX160	6

$$\log_{10}(W_{18}) = \left\{ -1.645(0.49) + 9.36\log_{10}(3.83+1) - 0.20 + \frac{\log_{10}\left[\frac{2.2}{4.2-1.5}\right]}{0.40 + \frac{1094}{(3.83+1)^{5.19}}} + 2.32\log_{10}(5000) - 8.07 \right\}$$

$W_{18} = 605{,}029$ ESALs

$(W_{18})_R = W_{18}(TBR)$

$(W_{18})_{R-TX160} = 605{,}029(6) = 3{,}630{,}172$ ESALs

COST WORKSHEET

PROJECT: **SR 144 WIDENING FROM CR 100 TO CR 154**
Project No. STP00-0630-00(010) Bryan County, Georgia
Design Development Stage

ALTERNATIVE NO.: **S-6**

SHEET NO.: **8 of 8**

PROJECT ITEM		ORIGINAL ESTIMATE			ALTERNATE ESTIMATE		
ITEM	UNITS	NO. OF UNITS	COST/ UNIT	TOTAL	NO. OF UNITS	COST/ UNIT	TOTAL
Full Depth Pavement Section	SY	81,750	63.66	5,204,205			
Section with Tensar Geogrid	SY				81,750	54.46	4,452,105
Construction Subtotal				5,204,205			4,452,105
Markup (%) at 11%				572,463			489,732
TOTAL				5,776,668			4,941,837

VALUE ENGINEERING ALTERNATIVE

PROJECT: **SR 144 WIDENING FROM CR 100 TO CR 154** ALTERNATIVE NO.:**S-7**
Project No. STP00-0630-00(010) Bryan County, Georgia
Preliminary Submittal

DESCRIPTION: **USE 24-IN. CURB AND GUTTER IN LIEU OF 30-IN. CURB AND GUTTER** SHEET NO.: **1 of 4**

ORIGINAL DESIGN:

The current design uses an 8-in.-high by 30-in.-wide curb and gutter section along the urban shoulders and median.

ALTERNATIVE: (sketch attached)

Use an 8-in.-high by 24-in.-wide curb and gutter section along the urban shoulders and median. This would reduce the right-of-way by one foot along the 26,000 LF corridor.

ADVANTAGES:

- Less construction cost
- Could reduce right-of-way and environmental impacts very slightly

DISADVANTAGES:

- Reduces gutter spread to 7.5-ft.

DISCUSSION:

It is common practice for county and cities to use 24-in.-wide curb and gutter sections without any serious adverse effects. The 24-in.-wide curb and gutter only reduces the gutter spread by 6-in. If this reduced gutter spread affects the amount of catch basins, it is recommended to request a design variance to use an 8-ft. gutter spread and let the roadway water flow infringe 6-in. into the outside lane. The "thought" is if the 24-in. section becomes the typical, then it would reduce the unit cost.

During the period 7/2007 to 6/2008, the average unit cost (LF) for an 8-in. x 24-in. curb and gutter was $1.51/LF = ($16.13/LF - $14.62/LF) less expensive than an 8-in. by 30-in. curb and gutter.

There were six projects with 8-in. by 24-in. curb and gutter and 64 projects with 8-in. by 30-in. curb and gutter. From this usage of curb and gutter, it is a reasonable assumption that if the 8-in. by 24-in. was used more often, it would "drive" the price down even more.

COST SUMMARY	INITIAL COST	PRESENT WORTH RECURRING COSTS	PRESENT WORTH LIFE-CYCLE COST
ORIGINAL DESIGN	$ 1,613,384	–	$ 1,613,384
ALTERNATIVE	$ 1,427,270	–	$ 1,427,270
SAVINGS (Original minus Alternative)	$ 186,114	–	$ 186,114

SKETCH

PROJECT: **SR 144 WIDENING FROM CR 100 TO CR 154**
Project No. STP00-0630-00(010) - Bryan County, Georgia
Preliminary Submittal

ALTERNATIVE NO.: S-7

ORIGINAL DESIGN ☐ ALTERNATIVE DESIGN ☐ BOTH ☒

SHEET NO.: 2 of 4

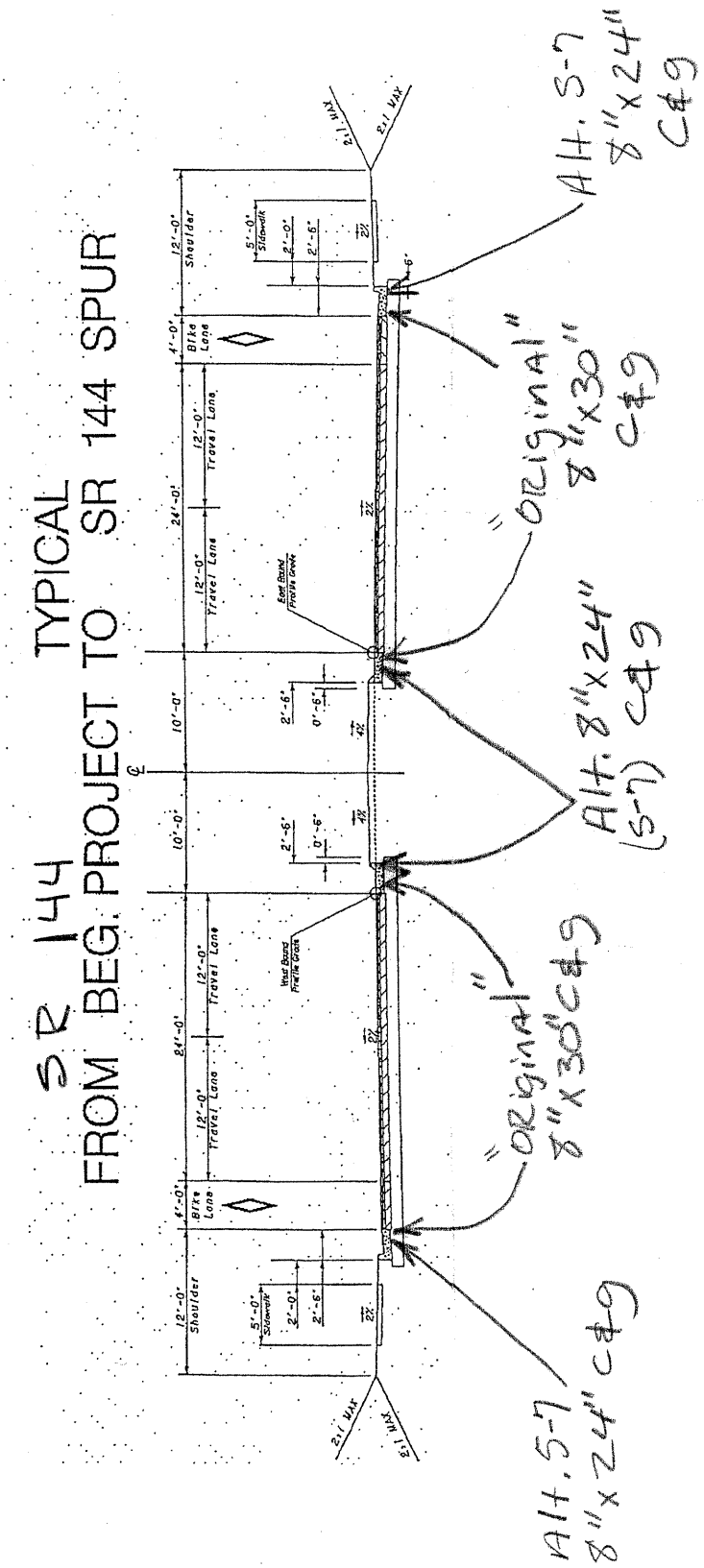

CALCULATIONS

PROJECT: **SR 144 WIDENING FROM CR 100 TO CR 154**
Project No. STP00-0630-00(010) - Bryan County, Georgia
Preliminary Submittal

ALTERNATIVE NO.: S-7

SHEET NO.: 3 of 4

Original Quantity and unit Cost for 8"x 30" curb & gutter:

From GDOT Item Mean Summary (2008): $16.13/LF

And 87,950 L.F.

Alternate Quantity and unit cost:

Same Quantity as Original: 87,950 L.F.

From GDOT Item Mean Summary (2008) $14.62/LF

This unit costs will be used in the Cost Comparison since it is comparing prices from the same Construction period.

Saved R/W

$\frac{1' \times 26{,}000'}{43{,}560 SF/AC} = 0.60 AC$

It is important to assess a R/W value even though it is only a foot because there will be areas where any reduction in construction limits will be critical.

COST WORKSHEET

PROJECT: **SR 144 WIDENING FROM CR 100 TO CR 154**
Project No. STP00-0630-00(010) Bryan County, Georgia
Design Development Stage

ALTERNATIVE NO.: **S-7**

SHEET NO.: **4 of 4**

PROJECT ITEM		ORIGINAL ESTIMATE			ALTERNATE ESTIMATE		
ITEM	UNITS	NO. OF UNITS	COST/ UNIT	TOTAL	NO. OF UNITS	COST/ UNIT	TOTAL
8-in. x 30-in. curb and gutter	LF	16.13	87,950.00	1,418,634			
Saved right-of-way	AC	0.60	30,000.00	18,000			
8-in. x 24-in. curb and gutter	LF				15	87,950.00	1,285,829
Right-of-Way Subtotal				18,000			
Markup (%) at 115%				20,700			
Construction Subtotal				1,418,634			1,285,829
Markup (%) at 11%				156,050			141,441
TOTAL				1,613,384			1,427,270

VALUE ENGINEERING ALTERNATIVE

PROJECT: **SR 144 WIDENING FROM CR 100 TO CR 154**
Project No. STP00-0630-00(010) Bryan County, Georgia
Preliminary Submittal

ALTERNATIVE NO.: **S-8**

DESCRIPTION: **REMOVE SIDEWALK ON THE EAST SIDE OF THE ROADWAY**

SHEET NO.: **1 of 5**

ORIGINAL DESIGN:

The current design constructs a sidewalk on the northbound and southbound lanes.

ALTERNATIVE: (sketch attached)

Remove the sidewalk on the east side of the roadway and leave in place the sidewalk on the west side of the project. Retain the right-of-way so that future installation of the sidewalk could be done without changes to the right-of-way.

ADVANTAGES:

- Reduces construction cost
- Allows the City of Richmond Hill and the County to install a sidewalk later as development increases over time

DISADVANTAGES:

- Pedestrians may need to cross the road to access the sidewalk

DISCUSSION:

The removal of the sidewalk on the east side will defer the cost to build it. This option will allow for sidewalk development on an as-needed basis relating to projected residential/commercial development. Further consideration with this option will allow more review and discussion to consider a multi-use trail on one side of the roadway.

COST SUMMARY	INITIAL COST	PRESENT WORTH RECURRING COSTS	PRESENT WORTH LIFE-CYCLE COST
ORIGINAL DESIGN	$ 516,257	–	$ 516,257
ALTERNATIVE	$ 0	–	$ 0
SAVINGS (Original minus Alternative)	$ 516,257	–	$ 516,257

5/2/2008 Tue Sep 02 11:13:28 2008 \\gdot-dsn1\pocfg\resources\Ddot2007_Kip.tbl J:\DESIGN\532370\DGN\532370TYPS.dgn

STATE	PROJECT NUMBER	SHEET NO.	TOTAL SHEETS
GA			

CURRENT TYPICAL
FROM BEG. PROJECT TO SR 144 SPUR

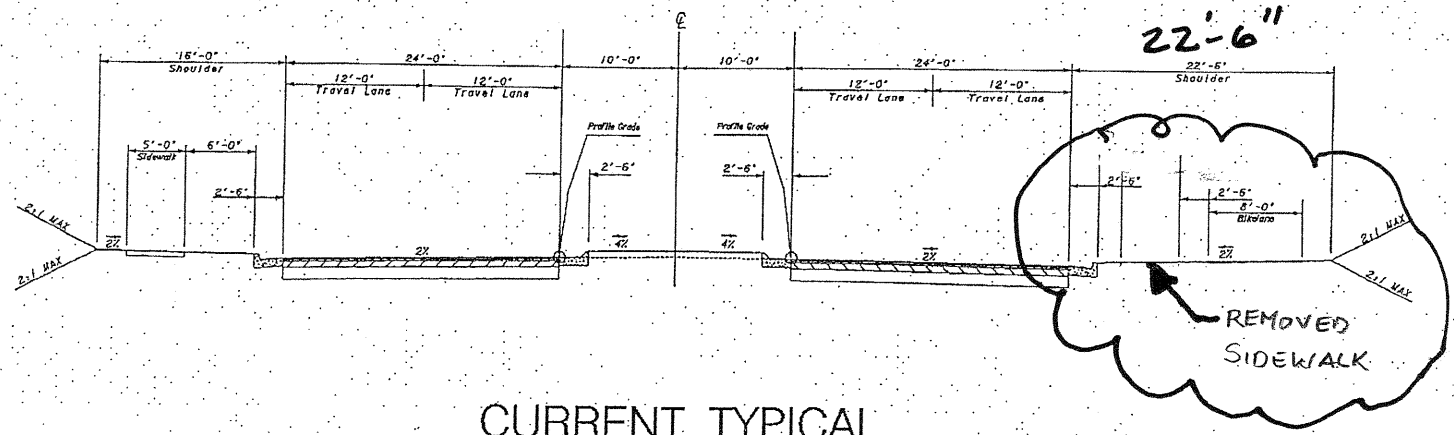

CURRENT TYPICAL
FROM SR 144 SPUR TO END OF PROJECT

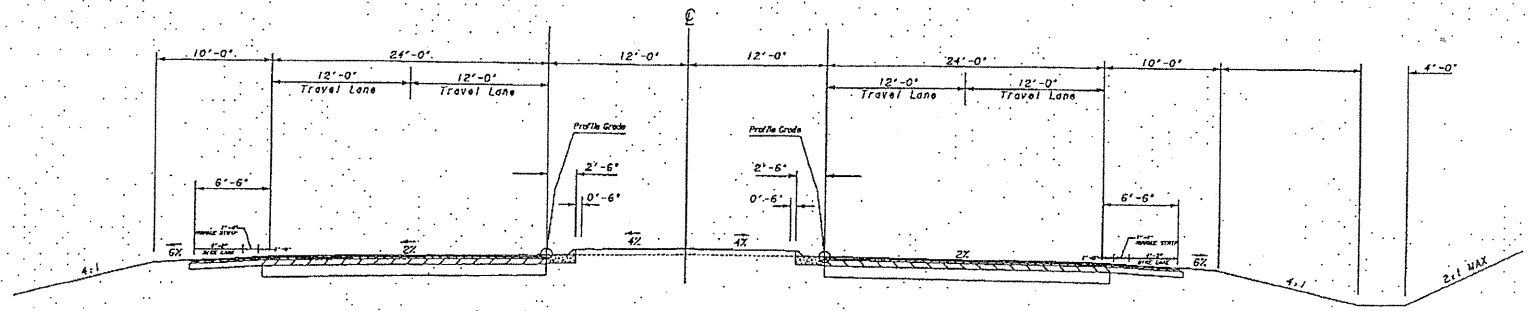

REVISION DATES	STATE OF GEORGIA DEPARTMENT OF TRANSPORTATION
	OFFICE:
	TYPICAL SECTIONS
	DRAWING No. 5-5

S-8

2/5

9/12/2008 Tue Sep 02 11:13:28 2008 \\gdot-csnl\gcc\g\resources\Gdot2007_Kip.tbl J:\DESIGN\532370\DGN\532370TYPS.dgn

STATE	PROJECT NUMBER	SHEET NO.	TOTAL SHEETS
GA			

PROPOSED TYPICAL FROM BEG. PROJECT TO SR 144 SPUR

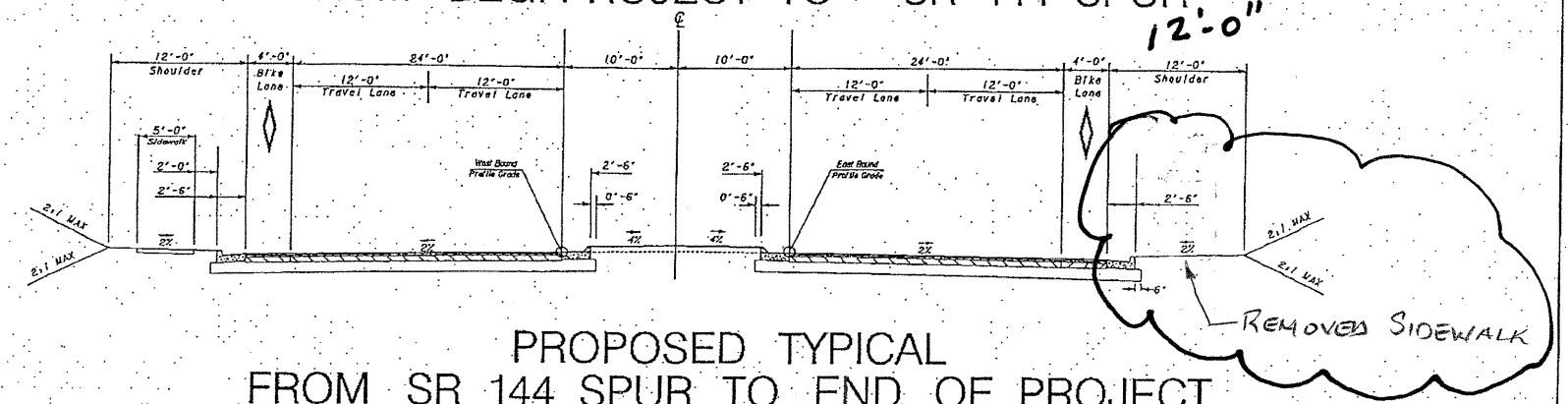

PROPOSED TYPICAL FROM SR 144 SPUR TO END OF PROJECT

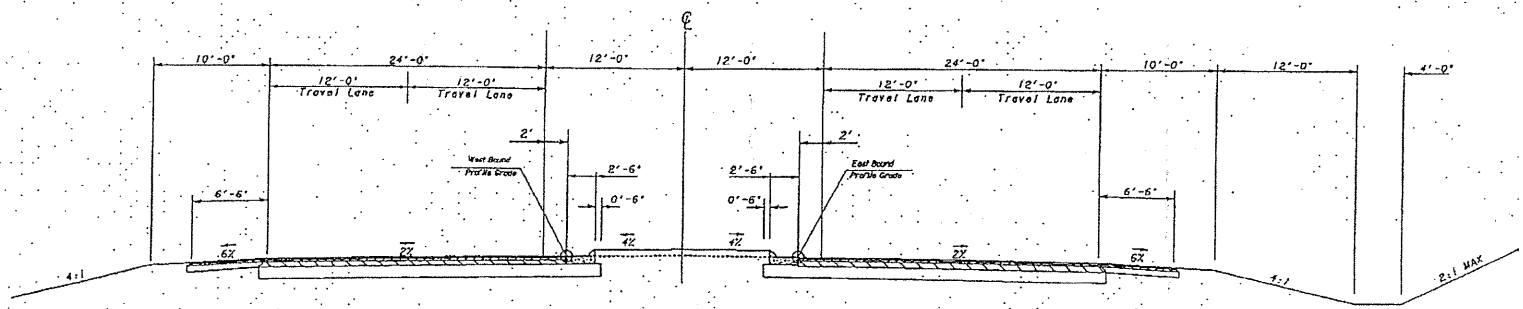

REVISION DATES		

STATE OF GEORGIA
DEPARTMENT OF TRANSPORTATION
OFFICE:
TYPICAL SECTIONS

DRAWING No. 5-1

S-8

3/5

CALCULATIONS

PROJECT: **SR 144 WIDENING FROM CR 100 TO CR 154**
Project No. STP00-0630-00(010) - Bryan County, Georgia
Preliminary Submittal

ALTERNATIVE NO.: S-8

REMOVE SIDEWALK ON THE EAST SIDE OF ROADWAY

SHEET NO.: 4 of 5

SIDEWALK LOCATION

STA. 16+82.00 TO STA. 214+50 LT

L = 19,768.00 x 5' = 98,840.00/9

= 10,982.22 (.10) = 1,098.22

10,982.22
+ 1,098.22
12,080.44 LF CONC. SIDEWALK

COST WORKSHEET

PROJECT: **SR 144 WIDENING FROM CR 100 TO CR 154**

Project No. STP00-0630-00(010) Bryan County, Georgia

Design Development Stage

ALTERNATIVE NO.: **S-8**

SHEET NO.: **5 of 5**

PROJECT ITEM		ORIGINAL ESTIMATE			ALTERNATE ESTIMATE		
ITEM	UNITS	NO. OF UNITS	COST/ UNIT	TOTAL	NO. OF UNITS	COST/ UNIT	TOTAL
441-0104 concrete sidewalk	SY	12,080.00	38.50	465,080			
Subtotal				465,080			
Markup (%) at 11%				51,159			
TOTAL				516,239			

VALUE ENGINEERING ALTERNATIVE

PROJECT: **SR 144 WIDENING FROM CR 100 TO CR 154** ALTERNATIVE NO.:**S-9**
Project No. STP00-0630-00(010) Bryan County, Georgia
Preliminary Submittal

DESCRIPTION: **REDUCE SHOULDER WIDTH FROM 12-FT. TO 10'FT.** SHEET NO.: **1 of 3**

ORIGINAL DESIGN:

A 12-ft.-wide shoulder is provided from project beginning to SR144 spur.

ALTERNATIVE:

Construct a 10-ft.-wide shoulder from project beginning to SR144 spur.

ADVANTAGES:

- Reduces right-of-way by approximately one acre

DISADVANTAGES:

- Slight reduction in sidewalk

DISCUSSION:

A 12-ft.-wide shoulder is not necessary. A 10-ft.-wide shoulder will be sufficient. The right-of-way width can be reduced by 2-ft. to save costs.

COST SUMMARY	INITIAL COST	PRESENT WORTH RECURRING COSTS	PRESENT WORTH LIFE-CYCLE COST
ORIGINAL DESIGN	$ 8,600,000	–	$ 8,600,000
ALTERNATIVE	$ 8,523,605	–	$ 8,523,605
SAVINGS (Original minus Alternative)	$ 76,395	–	$ 76,395

CALCULATIONS

PROJECT: **SR 144 WIDENING FROM CR 100 TO CR 154**
Project No. STP00-0630-00(010) - Bryan County, Georgia
Preliminary Submittal

ALTERNATIVE NO.: 5-9

SHEET NO.: 2 of 3

Length from Project Beginning to 144 Spur = 20 100 ft

Area along Length = (20 100')(2') = 40 200 ft^2

= 0.923 acres

Cost => Say ($500,000) 0.1 = 50,000
($30,000) 0.9 = 27,000
} Avg = $38,500/acre

=> (0.923 acres)($38,500/acres) = $35,535

COST WORKSHEET

PROJECT: **SR 144 WIDENING FROM CR 100 TO CR 154**

Project No. STP00-0630-00(010) Bryan County, Georgia

Design Development Stage

ALTERNATIVE NO.: **S-9**

SHEET NO.: **3 of 3**

PROJECT ITEM		ORIGINAL ESTIMATE			ALTERNATE ESTIMATE		
ITEM	UNITS	NO. OF UNITS	COST/ UNIT	TOTAL	NO. OF UNITS	COST/ UNIT	TOTAL
12-ft. shoulder to 10-ft. shoulder	Acre				0.923	38,500.00	35,536
Subtotal							35,536
Markup (%) at	**115%**						40,866
TOTAL							76,402

VALUE ENGINEERING ALTERNATIVE

PROJECT: **SR 144 WIDENING FROM CR 100 TO CR 154** ALTERNATIVE NO.:**S-11**
Project No. STP00-0630-00(010) Bryan County, Georgia
Preliminary Submittal

DESCRIPTION: **BUILD A TWO-LANE FACILITY WITH RAISED GRASS MEDIAN IN LIEU OF FOUR LANES AND RETAIN EXISTING BRIDGE** SHEET NO.: **1 of 7**

ORIGINAL DESIGN: (sketch attached)

The original design widens SR 144 to a four-lane facility with 20-ft. and 24-ft.-wide raised medians. The design uses curb and gutter and an urban shoulder for 3.81 miles, and a rural shoulder (ditch) for the last 1.12 miles.

ALTERNATIVE: (sketch attached)

Widen existing SR 144 to a three-lane roadway with right-turn lanes at all crossroad intersections. This typical section would use a rural outside shoulder for the entire length of the project. Acquire the right-of-way now in order to construct four lanes in the future.

ADVANTAGES:

- Less construction cost
- Right-of-way preserved for future widening to four lanes

DISADVANTAGES:

- Less traffic capacity
- More delays at intersections than a four-lane facility

DISCUSSION:

The current design construction cost estimate is approximately $18,000,000. A three lane facility with a middle left-turn lane and improvements at crossroad intersections would improve traffic operations until the funds are available to finish the widening to four lanes. It is recommended to include the two proposed traffic signals at Timber Trail Road and Port Royal Road. It is important to mention that the 20-ft. and 24-ft. raised medians would be built along the new center line to be in the correct location for future widening. The median would taper to 4-ft. across the existing bridge to provide for two 8-ft.-wide outside shoulders. The existing bridge has a sufficiency rating of 94.52 (built in 1991) and is in excellent structural condition. A short portion of the median approaching and leaving the existing bridge would have to be replaced under any future 4-lane widening to align the future median in the middle of a future bridging widening.

It is important to note that all the pavement being saved is "new" full-depth pavement under the current (original) design. The alternate design would use existing pavement that is being retained and over-layed, which results in a substantial construction cost savings.

COST SUMMARY	INITIAL COST	PRESENT WORTH RECURRING COSTS	PRESENT WORTH LIFE-CYCLE COST
ORIGINAL DESIGN	$ 11,536,274	–	$ 11,536,274
ALTERNATIVE	$ 842,944	–	$ 842,944
SAVINGS (Original minus Alternative)	$ 10,693,330	–	$ 10,693,330

Sketch Alt. S-11
2/7

Original Design

Tue Sep 02 11:15:26 2008 | \\gdot-csnl\gocfy\resources\Gdot2007_Kip.tbl | J:\DESIGN\532370\DGN\532370TYPS.dgn

STATE	PROJECT NUMBER	SHEET NO.	TOTAL SHEETS
GA			

PROPOSED TYPICAL
FROM BEG. PROJECT TO SR 144 SPUR

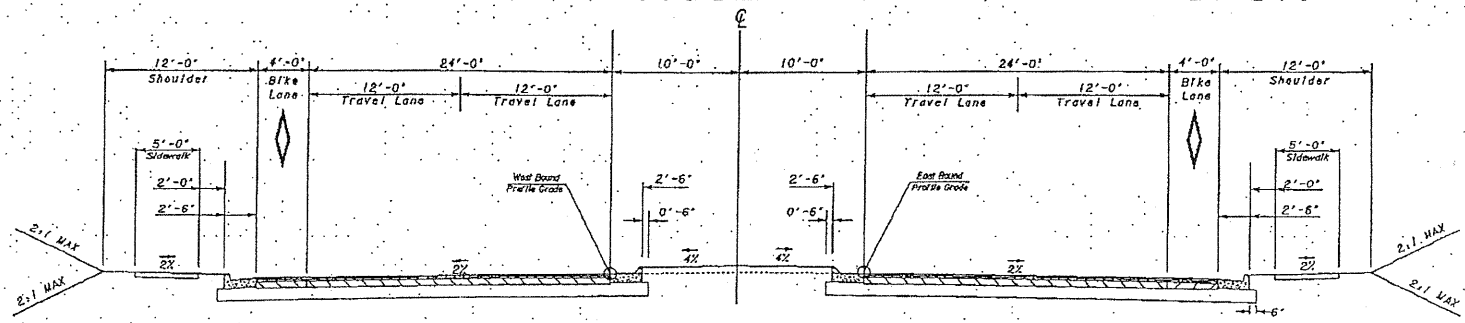

PROPOSED TYPICAL
FROM SR 144 SPUR TO END OF PROJECT

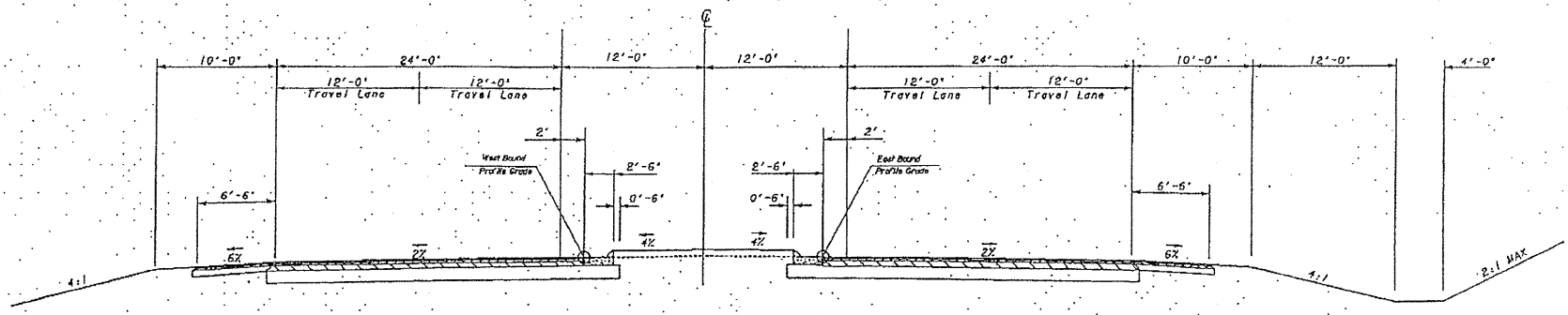

REVISION DATES		

STATE OF GEORGIA
DEPARTMENT OF TRANSPORTATION
OFFICE:
TYPICAL SECTIONS

DRAWING No. 5-1

SKETCH

PROJECT: **SR 144 WIDENING FROM CR 100 TO CR 154**
Project No. STP00-0630-00(010) - Bryan County, Georgia
Preliminary Submittal

ALTERNATIVE NO.: 5-11

ORIGINAL DESIGN ☐ ALTERNATIVE DESIGN ☒ BOTH ☐

SHEET NO.: 3 of 7

Alternate Design Typical

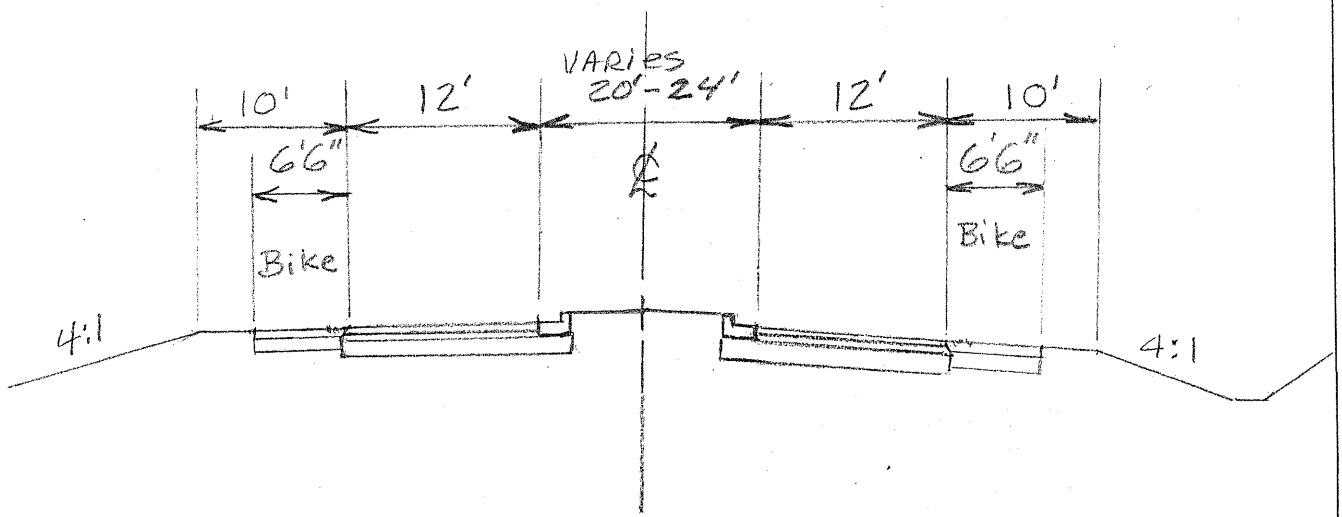

N.T.S.

3 Lanes on 4 Lanes of R/W

SKETCH

PROJECT: **SR 144 WIDENING FROM CR 100 TO CR 154**
Project No. STP00-0630-00(010) - Bryan County, Georgia
Preliminary Submittal

ALTERNATIVE NO.: S1-1

ORIGINAL DESIGN ☐ ALTERNATIVE DESIGN ☒ BOTH ☐

SHEET NO.: 4 of 7

Alternate Design
(Retain Existing Bridge & Restripe for 3 Lanes)

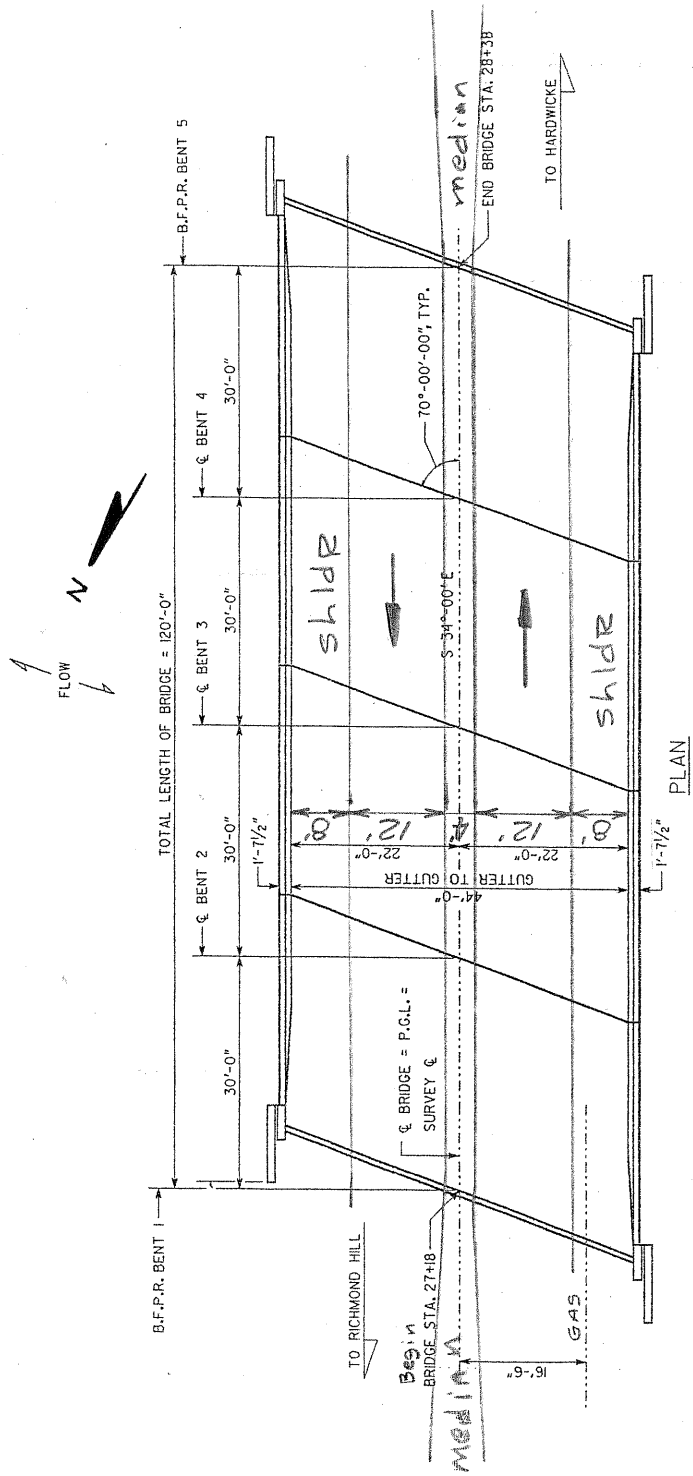

2 Lanes with 4' strip

CALCULATIONS

PROJECT: **SR 144 WIDENING FROM CR 100 TO CR 154**
Project No. STP00-0630-00(010) - Bryan County, Georgia
Preliminary Submittal

ALTERNATIVE NO.: S'-11

SHEET NO.: 5 of 7

Original Costs Saved under Alt. S'-11

→ outside curb & gutter to be saved: 15+00 → 216+00
2 sides x (20,100 L.F. - 400) = 39,400 L.F.

→ All sidewalk eliminated = $246,246 (from GDOT Cost estimate).

With Rural shoulder on both sides All
→ Longitudinal drainage system is saved:
= $1,832,224 (from GDOT Cost Estimate)

→ A new bridge is not Required:
Savings: 120' x 92' = 11,040 SF
Use: $78/SF (from GDOT cost estimate)

→ Estimate of Earthwork saved:
3-Lane would Require % of total Cost:
(100% - 62%) = 38% (saved)
.38 x 250,000 CY = 95,000 C.Y. (saved)

→ Estimate of Erosion Control saved:
.38 x $60,000/mi = $ 22,800/mi (saved)

→ Estimate of clearing & Grubbing saved.
.38 x $ 27,000/mi = $ 10,260/mi

→ Estimate of Signing & Striping saved: (25%)
.25 x $10,000 = $ 2,500/mi

PROJECT: **SR 144 WIDENING FROM CR 100 TO CR 154**
Project No. STP00-0630-00(010) - Bryan County, Georgia
Preliminary Submittal

ALTERNATIVE NO.: S-11

SHEET NO.: 6 of 7

Original Costs Saved (Continued):

Pavement Saved: Sta: 15+00 - Sta. 216+00

$$\frac{[(48'+4'+4')-(24')] \times (29{,}100'-2000')}{9\,sf/sy} = 64{,}350\,sy$$

Pavement Saved: Sta 216+00 - Sta. 275+00

$$\frac{(56'-24') \times (5{,}900'-1000')}{9\,sf/sy} = 17{,}400\,sy$$

(Total Full depth Pavement Saved) = 81,750 sy

Use $59.00/sy for Asph. & G.A.B. (see Alt. A-3)

Alternate Design Cost Required for Urban paved shoulders from Sta. 15+00 to Sta. 216+00

$$\frac{(6.5' \times 2\,sides) \times (29100'-1000'-120')}{9\,sf/sy} = 27{,}415\,s.y.$$

use $24.60/sy

Both the Original Design and Alternate Design use a 6.5' paved outside shoulders from Sta 216+00 to Sta 275+00 so therefore this cost is a "wash" when comparing these two Designs.

Add Additional Longitudinal Drainge Cost for Superelevation sections flowing towards the median. use 0.70 miles

COST WORKSHEET

PROJECT: **SR 144 WIDENING FROM CR 100 TO CR 154**
Project No. STP00-0630-00(010) Bryan County, Georgia
Design Development Stage

ALTERNATIVE NO.: **S-11**

SHEET NO.: **7 of 7**

PROJECT ITEM		ORIGINAL ESTIMATE			ALTERNATE ESTIMATE		
ITEM	UNITS	NO. OF UNITS	COST/ UNIT	TOTAL	NO. OF UNITS	COST/ UNIT	TOTAL
Extra "original" costs for four lanes over three lanes							
Full-depth pavement	SY	81,750	59.00	4,823,250			
Sidewalks (from GDOT)	LS			246,246			
Curb and gutter	LF	39,400.00	21.00	827,400			
Longitudinal drainage (from GDOT)	LS			1,832,224			
Save new bridge	SF	11,040	78.00	861,120			
Earth work borrow	CY	95,000	15.00	1,425,000			
Erosion control	MI	5	22,800.00	114,000			
Clear and grub	MI	5	10,260.00	51,300			
Signing and marking	MI	5	2,500.00	12,500			
Traffic control (from GDOT)	LS			200,000			
Alternate cost for paved:							
STA15+00 to 216+00	SY				27,415	24.60	674,409
Median drainage curves	MI				160,000	0.70	112,000
Subtotal				10,393,040			786,409
Markup (%) at 11%				1,143,234			86,505
TOTAL				11,536,274			872,914

VALUE ENGINEERING ALTERNATIVE

PROJECT: **SR 144 WIDENING FROM CR 100 TO CR 154** ALTERNATIVE NO.:**S-12**
Project No. STP00-0630-00(010) Bryan County, Georgia
Preliminary Submittal

DESCRIPTION: **USE MORE DITCHES AND LESS CURB AND GUTTER** SHEET NO.: **1 of 3**

ORIGINAL DESIGN:

The current plans indicate an urban section from STA. 16+82 to STA. 215+99.95.

ALTERNATIVE:

Remove curb and gutter and 5-ft. sidewalk, reduce proposed right-of-way and use a 12-ft.-wide shoulder on the northbound lane.

ADVANTAGES:

- Reduces construction cost/impacts
- Reduces right-of-way impacts
- Increases construction schedule
- Reduces drainage cost

DISADVANTAGES:

- Will not accommodate pedestrian traffic through the corridor

DISCUSSION:

The suggested alternative will eliminate the urban section on the east side of the proposed widening and keep the typical section consistent on the west side. This proposed change will reduce cost but lengthen the project schedule.

COST SUMMARY	INITIAL COST	PRESENT WORTH RECURRING COSTS	PRESENT WORTH LIFE-CYCLE COST
ORIGINAL DESIGN	$ 1,322,845	–	$ 1,322,845
ALTERNATIVE	$ 0	–	$ 0
SAVINGS (Original minus Alternative)	$ 1,322,845	–	$ 1,322,845

CALCULATIONS

PROJECT: **SR 144 WIDENING FROM CR 100 TO CR 154**
Project No. STP00-0630-00(010) - Bryan County, Georgia
Preliminary Submittal

ALTERNATIVE NO.: S-12

USE MORE DITCHES AND LESS CURB & GUTTER

SHEET NO.: 2 of 3

REMOVE SIDEWALK LOCATION:
STA. 16+82.00 - STA. 214+50
L = 19,768 x 5' = 98,840/9
= 10,982.22 (.10) = 1,098.22

10,982.22
1,098.22
12,080.44 SY

REMOVE 30" TP. 2 C&G

L = 19,768 x (.10) = 1,976.80 + 19,768
= 21,744.80 LF

REDUCE PROPOSED RIGHT OF WAY

19,768.00 x 10' = 197,680 SF x 0.68 ¢/SF
= $134,422.40 (2.15)
= $289,008.16

REDUCE G.A.B

L = 19,768 x 2.5' = 49,420.00 SF/9
= 5,491.11 SY (.10) = 549.11 + 5,491.11
= 6,040.22 SY

COST WORKSHEET

PROJECT: **SR 144 WIDENING FROM CR 100 TO CR 154**

Project No. STP00-0630-00(010) Bryan County, Georgia

Design Development Stage

ALTERNATIVE NO.: **S-12**

SHEET NO.: **3 of 3**

PROJECT ITEM		ORIGINAL ESTIMATE			ALTERNATE ESTIMATE		
ITEM	UNITS	NO. OF UNITS	COST/ UNIT	TOTAL	NO. OF UNITS	COST/ UNIT	TOTAL
Concrete sidewalk	SY	12,080.00	38.50	465,080			
8-in. x 30-in., TP 2	LF	21,745.00	17.00	369,665			
GAB	SY	6,040	16.00	96,640			
Reduce proposed right-of-way							
19768 x 10-ft. = 197,680 x .68 /SF							
=$134,422.40 (2.15) = $289,008.16 savings							
Subtotal				931,385			
Markup (%) at 11%				102,452			
Savings				1,033,837			
Right-of-Way Savings				289,008			
TOTAL SAVINGS				1,322,845			

VALUE ENGINEERING ALTERNATIVE

PROJECT: **SR 144 WIDENING FROM CR 100 TO CR 154** ALTERNATIVE NO.: **B-1**
Project No. STP00-0630-00(010) Bryan County, Georgia
Preliminary Submittal

DESCRIPTION: **REDUCE MEDIAN WIDTH ON THE BRIDGE FROM 20 FT. TO 8 FT.** SHEET NO.: **1 of 3**

ORIGINAL DESIGN:

The bridge median width is 20 feet and the total proposed bridge width is 92 feet.

ALTERNATIVE:

Reduce bridge median width to 8 feet and reduce the total bridge width to 80 feet.

ADVANTAGES:

- Reduction of bridge width by 12 feet
- Significant cost reduction

DISADVANTAGES:

- Taper curb and gutter to line up at bridge

DISCUSSION:

A 20-ft.-wide raised median is not necessary on the bridge. An 8-ft-wide raised median would reduce the overall bridge width to 80-ft. and provide a significant cost savings.

COST SUMMARY	INITIAL COST	PRESENT WORTH RECURRING COSTS	PRESENT WORTH LIFE-CYCLE COST
ORIGINAL DESIGN	$ 955,843	—	$ 955,843
ALTERNATIVE	$ 831,168	—	$ 831,168
SAVINGS (Original minus Alternative)	$ 124,675	—	$ 124,675

PROJECT: **SR 144 WIDENING FROM CR 100 TO CR 154**
Project No. STP00-0630-00(010) - Bryan County, Georgia
Preliminary Submittal

ALTERNATIVE NO.: 8-1

SHEET NO.: 2 of 3

Bridge Length = 120'-0"

Median Reduction = 20' - 8' = 12'

Area = (120')(12') = 1440 ft^2

Cost = (1440 ft^2)(78 \$/ft^2) = \$112,320

COST WORKSHEET

PROJECT: **SR 144 WIDENING FROM CR 100 TO CR 154**

Project No. STP00-0630-00(010) Bryan County, Georgia

Design Development Stage

ALTERNATIVE NO.: **B-1**

SHEET NO.: **3 of 3**

PROJECT ITEM		ORIGINAL ESTIMATE			PROPOSED ESTIMATE		
ITEM	UNITS	NO. OF UNITS	COST/ UNIT	TOTAL	NO. OF UNITS	COST/ UNIT	TOTAL
Median reduction	SF				1,440	78.00	-112,320
Bridge cost	SF	11,040	78.00	861,120	11,040	78.00	861,120
Subtotal				861,120			748,800
Markup (%) at 11%				94,723			82,368
TOTAL				955,843			831,168

VALUE ENGINEERING ALTERNATIVE

PROJECT: **SR 144 WIDENING FROM CR 100 TO CR 154**
Project No. STP00-0630-00(010) Bryan County, Georgia
Preliminary Submittal

ALTERNATIVE NO.: **B-2**

DESCRIPTION: **CONSTRUCT A NEW SEPARATE PARALLEL BRIDGE IN LIEU OF WIDENING THE EXISTING BRIDGE**

SHEET NO.: **1 of 4**

ORIGINAL DESIGN: (sketch attached)

Widen existing bridge from 47'-3" to 94'-2". Add bike lane, raised sidewalk and new barrier.

ALTERNATIVE: (sketch attached)

Construct new, separate parallel bridge and leave existing bridge intact. Do not add sidewalk or new barrier to existing bridge.

ADVANTAGES:

- No need to widen existing bridge
- New parallel bridge
- Reduces maintenance of traffic (MOT)

DISADVANTAGES:

- New parallel bridge will be constructed very close to existing bridge
- Must drive new piles to clear existing battered piles

DISCUSSION:

The new parallel bridge would be 46'-9" wide including an 8-ft. shoulder. Consider using a concrete flat slab bridge (with a 30-ft. span and a 21-inch thick deck). A flat slab bridge would not encroach on the flood elevations at the bridge edge. MOT costs would be reduced by not modifying the existing bridge. The new piles would need to be driven to clear the existing piles, which are battered.

COST SUMMARY	INITIAL COST	PRESENT WORTH RECURRING COSTS	PRESENT WORTH LIFE-CYCLE COST
ORIGINAL DESIGN	$ 955,843	—	$ 955,843
ALTERNATIVE	$ 485,714	—	$ 485,714
SAVINGS (Original minus Alternative)	$ 470,129	—	$ 470,129

PROJECT: **SR 144 WIDENING FROM CR 100 TO CR 154**
Project No. STP00-0630-00(010) - Bryan County, Georgia
Preliminary Submittal

ALTERNATIVE NO.: B-2

SHEET NO.: 2 of 4

Construct New Separate Parallel Bridge

New Bridge Width = 46'-9"

⇒ 1'-7½" Barrier + 8' Shoulder + 2 Lanes @ 12' + 4' Bike + 2' Shoulder + 6' Sidewalk + 1'-1½" Barrier = 46'-9"

Area = (46'-9")(120'-0") = 5610 Ft^2

Cost = (5610 Ft^2)(78 \$/Ft^2) = \$437,580

SKETCH

PROJECT: **SR 144 WIDENING FROM CR 100 TO CR 154**
Project No. STP00-0630-00(010) - Bryan County, Georgia
Preliminary Submittal

ALTERNATIVE NO.: B-2

ORIGINAL DESIGN ☐ ALTERNATIVE DESIGN ☒ BOTH ☐

SHEET NO.: 3 of 4

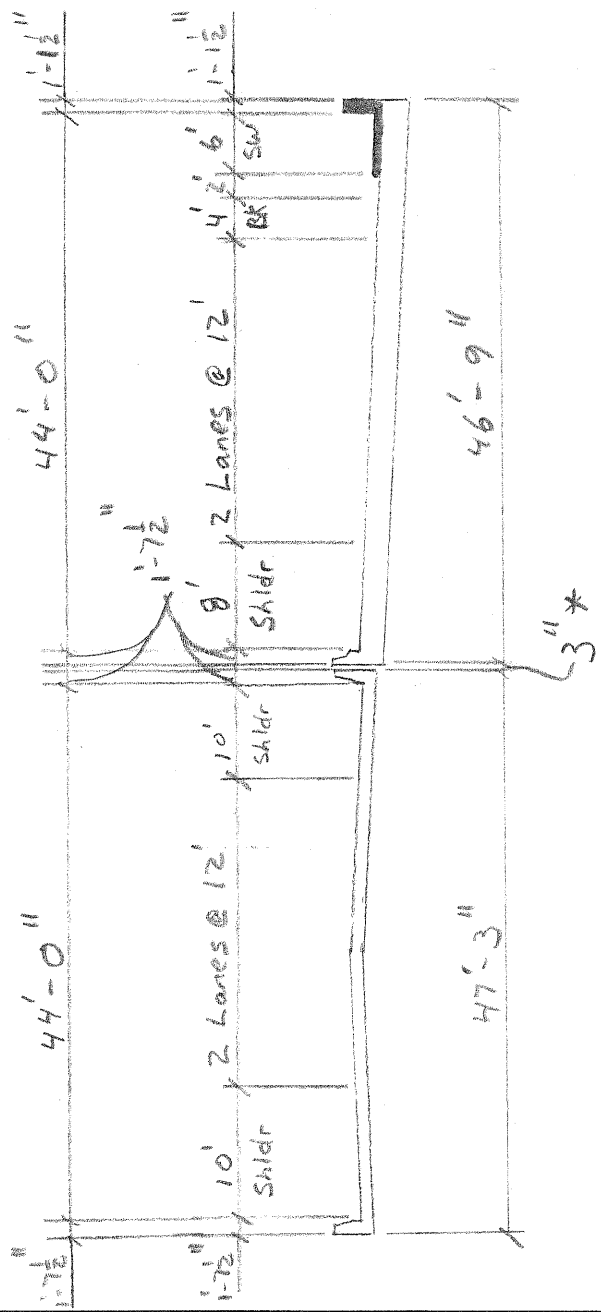

* Note: 8' Shoulder can be reduced to give more than 3" between bridges.

PROPOSED

COST WORKSHEET

PROJECT: **SR 144 WIDENING FROM CR 100 TO CR 154**

Project No. STP00-0630-00(010) Bryan County, Georgia

Design Development Stage

ALTERNATIVE NO.: **B-2**

SHEET NO.: **4 of 4**

PROJECT ITEM		ORIGINAL ESTIMATE			PROPOSED ESTIMATE		
ITEM	UNITS	NO. OF UNITS	COST/ UNIT	TOTAL	NO. OF UNITS	COST/ UNIT	TOTAL
				*			
New separate parallel bridge	SF	11,040	78.00	861,120	5,610	78.00	437,580
* Original estimate used full bridge with of 92 feet for the widening.							
Subtotal				861,120			437,580
Markup (%) at 11%				94,723			48,134
TOTAL				955,843			485,714

VALUE ENGINEERING ALTERNATIVE

PROJECT: **SR 144 WIDENING FROM CR 100 TO CR 154** ALTERNATIVE NO.: **B-3**
Project No. STP00-0630-00(010) Bryan County, Georgia
Preliminary Submittal

DESCRIPTION: **ADD SIDEWALK ONLY ON WEST SIDE OF BRIDGE** SHEET NO.: **1 of 3**

ORIGINAL DESIGN:

Add sidewalk and new barrier to west side of existing bridge.

ALTERNATIVE:

Keep existing barrier and do not add a raised sidewalk to the existing bridge.

ADVANTAGES:

- Uses existing barrier on west side of bridge, with no barrier removal
- Reduces maintenance of traffic (MOT)

DISADVANTAGES:

- Reduces shoulder width, but will have 10-ft. total with 4-ft. bike lane

DISCUSSION:

To reduce cost and MOT, use the existing barrier on the west side of the bridge and do not add a raised sidewalk. The shoulder width will be reduced and the bicycle lane will need to be lined up with the roadway bicycle lane.

COST SUMMARY	INITIAL COST	PRESENT WORTH RECURRING COSTS	PRESENT WORTH LIFE-CYCLE COST
ORIGINAL DESIGN	$ 955,843	—	$ 955,843
ALTERNATIVE	$ 940,171	—	$ 940,171
SAVINGS (Original minus Alternative)	$ 15,672	—	$ 15,672

PROJECT: **SR 144 WIDENING FROM CR 100 TO CR 154**
Project No. STP00-0630-00(010) - Bryan County, Georgia
Preliminary Submittal

ALTERNATIVE NO.: B-3

SHEET NO.: 2 of 3

6" Raised Sidewalk

6'(0.02%) = 0.12' (x-slope Down)

6'(0.01%) = 0.06' (x-slope Up)

Sidewalk thickness at barrier = 6" + 0.12' + 0.06' = 8.16"
(1.44") (0.72")

Average thickness = $\frac{6" + 8.16"}{2}$ = 7.08"

Side walk Concrete Volume = $(120')(6')\left(\frac{7.08"}{12}\right)$ = 424.8 Ft^3
= 15.73 CY

Deck Concrete => Say 1.38' (under Barrier ±)

thickness = $8\frac{7}{8}"$ + 8.16" = 17.04"
(Deck) (S/w)

Deck Concrete Volume Under Barrier ± => $(120')\left(\frac{17.04"}{12}\right)(1.38')$ = 235.15 Ft^3
= 8.71 CY

Total Concrete Volume = 15.73 CY + 8.71 Cy = 24.4 Cy

Concrete Cost = (24.4 CY)(377 $/CY) = $9199
Class A

Barrier Cost = (120')(41 $/Ft) = $4920

Additional MOT Cost.

COST WORKSHEET

PROJECT: **SR 144 WIDENING FROM CR 100 TO CR 154**

Project No. STP00-0630-00(010) Bryan County, Georgia

Design Development Stage

ALTERNATIVE NO.: **B-3**

SHEET NO.: **3 of 3**

PROJECT ITEM		ORIGINAL ESTIMATE			PROPOSED ESTIMATE		
ITEM	UNITS	NO. OF UNITS	COST/ UNIT	TOTAL	NO. OF UNITS	COST/ UNIT	TOTAL
Concrete	CY	24	377.00	9,199			
Barrier	LF	120	41.00	4,920			
Subtotal				14,119			
Markup (%) at 11%				1,553			
TOTAL				15,672			

Project Description

Project Description

PROJECT DESCRIPTION

PURPOSE AND NEED

The purpose of this project is to improve the safety and operational conditions of State Route 144 through the addition of travel and turn lanes. The need exists to increase the number of travel lanes in order to satisfactorily accommodate existing and future traffic volumes. Potential benefits of the project include energy conservation through the efficient movement of traffic that would otherwise be idle or delayed without the improvement and a safer traveling environment.

Project Location: The current proposed project is from MP 11.4 (Timber Trail Road) southeast to MP 16.00 (County Road 154). The total length of the proposed project is 4.6 miles.

Functional Classification: Rural Major Collector

Current and Future Traffic Data:

Current Year: (2015) 21,000 Design Year: (2035) 32,500

Typical Section:
The current typical section is an urban four-lane section of roadway with a 20-foot raised grassed median with sidewalks starting at Timber Trail, approximately MP 11.4 to 144 Spur (MP 15.2). Between MP 11.6 and MP 14.7, the typical was to contain a 22.5ft shoulder with an 8-foot asphalt bicycle lane. This typical section will be revised to an urban four-lane section of roadway with 4-foot bike lanes, 20-foot raised grass median and 12-ft. shoulders with sidewalks included.

Project termini:
The current project terminus is from MP 11.4 (Timber Trail Road) southeast to MP 16.0 (County Road 154) with a project length of 4.6 miles. These termini need to be changed at the beginning to include a signalized intersection at Timer Trail and at the end of the project it needs to be lengthened to transition the traffic after County Road 154 back to the existing roadway typical.

The typical section starting at MP 11.36 (Timber Trail Road) to MP 15.09 (SR 144 Spur) needs to be revised to an urban four-lane section of roadway, with the incorporation of 4-foot bicycle lanes on each outside edge of the travel lanes, a 20-foot-wide raised grass median with 12-ft.-wide shoulders with sidewalks included and a design speed of 45mph. The typical section between MP 15.09 (SR 144 Spur) and the end of the project will remain the same (rural four lane section of roadway with a 24-foot raised grassed median and 6.5-feet of paved bikeable shoulders) per the revised concept dated May 1, 2006. Also, within this typical section there will be a signalized intersection at MP 11.36 (Timber Trail Road) and a signalized intersection at MP 13.29 (Port Royal Road and the New entrance to Sterling Woods Subdivision.)

A project location map follows.

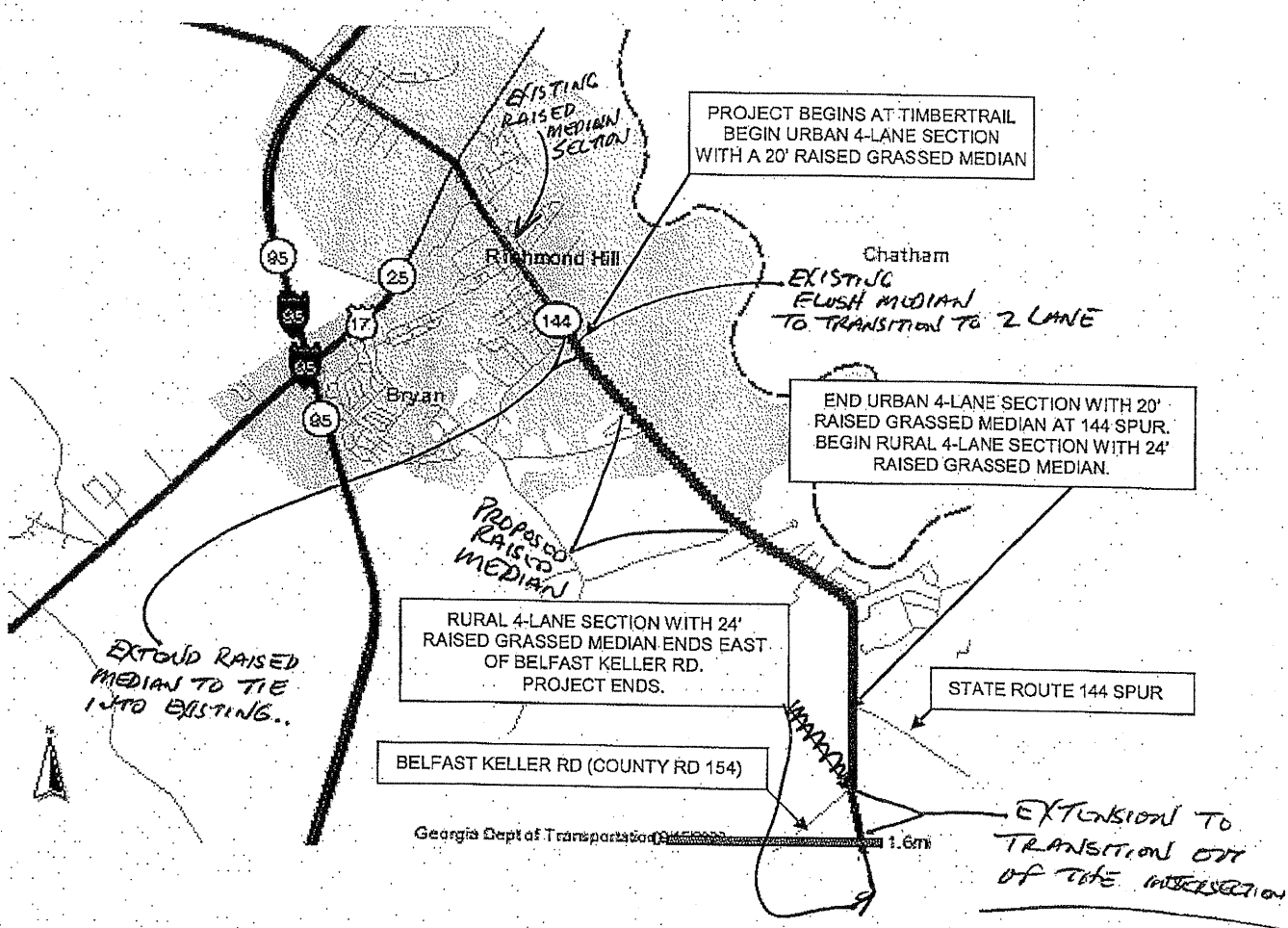

PROJECT LOCATION MAP
FOR
STP-0630(10), BRYAN COUNTY, P.I. NO. 532370
WIDENING AND RECONSTRUCTION OF SR 144

Costs:

Total construction:	$18.05M
Right-of-Way:	$8.60M
Grand Total Project Cost	**$27.00M**

Significant construction issues include the import of approximately 250,000CY of material for roadway base. The total cost for this line item is approximately $4M. Placement of this volume of fill will require a significant amount of time, pushing the construction duration out to approximately 24 months.

A project cost estimate follows.

PRELIMINARY COST ESTIMATE

DATE: 9/2/2008

PROJECT NUMBER: STP-0630(10), BRYAN COUNTY

P.I. NUMBER: 532370

PROJECT DESCRIPTION: SR 144

PROPOSED CONCEPT: WIDENING EXISTING TWO LANES WITH A 4 LANE URBAN SEC. WITH 20' RAISED MEDIAN AND A 4 LANE RURAL SECTION WITH A 24' RAISED MEDIAN

TRAFFIC: EXISTING: (2012)14145 DESIGN (2032)21984

Program Process ( ) Concept Development ( ) Project Development (X)

PROJECT COSTS

A. RIGHT OF WAY:	
1. PROPERTY (LAND & EASEMENTS)	$3,034,603
2. IMPROVEMENTS -	$270,000.00
3. DISPLACEMENTS & RELOCATIONS-	0
4. DAMAGES(PROXIMITY,CONSEQUENTIAL, COST TO CURE)	$696,500
5. SCHEDULING CONTINGENCY	$2,200,607
6. OTHER COSTS (ADM./COURT COST)	$2,400,662
SUBTOTAL ====	$8,602,372
B. REIMBURSABLE UTILITIES:	
1. TELEPHONE LINES -	$0
2. TRANSMISSION LINES -	$350,000
3. SERVICES -	$0
SUBTOTAL ====	$350,000

C. NON-REIMBURSABLE UTILITIES: (not included in grand total project cost)

1. TELEPHONE LINES -	$1,397,150
2. TRANSMISSION LINES -	$0
3. SERVICES -	$1,880,700
SUBTOTAL ====	$3,277,850

D. MAJOR STRUCTURES:

1. WALLS -	$0
2. BRIDGE- widening @ stream crossing -120 x 92 @ $78/SF	$861,120
3. BRIDGE - over/underpass	$0
4. BOX CULVERTS -	$0
SUBTOTAL ====	$861,120

E. GRADING AND DRAINAGE:

1. EARTHWORK	
In-Place Embankment	$3,750,000
2. DRAINAGE	
a. CROSS DRAIN PIPES (exc. Box culverts) -	$112,220
b. CURB & GUTTER - lf X $21/lf	$1,846,950
c. LONGITUDINAL SYSTEM (incl. Catch Basins) -	$1,832,224
SUBTOTAL ====	$7,541,394

F. BASE AND PAVING:

1. AGGREGATE BASE / 10" GAB	$1,667,563
2. ASPHALT PAVING - SUPERPAVE	$4,515,854
3. CONCRETE PAVING -	$246,246
4. OTHER (driveways, mill existing paving, etc.) -	$0
SUBTOTAL ====	$6,429,663

G. LUMP SUM ITEMS:

1. EROSION CONTROL -	$306,131
2. CLEARING & GRUBBING -	$142,000
3. TRAFFIC CONTROL -	$556,837
4. LANDSCAPING -	$0
5. DETOURS (incl Temp. bridges) -	$0
SUBTOTAL ====	$1,004,968

H. MISCELLANEOUS:

1. LIGHTING -	$0
2. SIGNING & STRIPING - $ 10,000/mi X 4.93 mi -	$49,300
3. GUARDRAIL -	$15,000
4. 2-TRAFFIC LIGHTS - ✓	$360,000
SUBTOTAL ====	$424,300

ESTIMATE SUMMARY

A. RIGHTS-OF-WAY ----------	$8,602,372
B. REIMBURSABLE UTILITIES ----------	$350,000
C. NON-REIMBURSABLE UTILITIES (not included in grand total project cost)----------	$3,277,850

CONSTRUCTION COST SUMMARY

D. MAJOR STRUCTURES ----------	$861,120
E. GRADING AND DRAINAGE ----------	$7,541,394
F. BASE AND PAVING ----------	$6,429,663
G. LUMP SUM ITEMS ----------	$1,004,968
H. MISCELLANEOUS ----------	$424,300
SUBTOTAL CONSTRUCTION COST ------	$16,261,445
ENGINEERING & INSPECTION (5%) ------	$813,072
CONSTRUCTION CONTINGENCY (6%) ---	$975,687
TOTAL CONSTRUCTION COST ==========	$18,050,203
GRAND TOTAL PROJECT COST ==========	$27,002,575

Cost Estimate Prepared by: Travis Dent, Design Squad Leader

Preliminary Right of Way Cost Estimate

Date: 7-25-08
Project: STP00-0630-00(010), Bryan County
Existing/Required R/W: +/- 38 Acres (req'd r/w)
Project Termini: Milepost 11.31 to Milepost 16.24 along SR144
Project Description: SR 144 Widening from CR 100(Timber Trail Rd.) to CR 154(Belfast Keller Rd.)

P.I. Number: 532370
No. Parcels: +/- 79 Par

Land:

Commercial	2.2288 Acres	@ $500,000 /Acre =	$1,114,400
Residential	15.50Acres	@ $85,000 /Acre =	$1,317,500
Residential/Acreage	20.0901 Acres	@ $30,000 /Acre =	$ 602,703
TOTAL			$3,034,603

Improvements: $270,000

TOTAL $270,000

Relocation:

Commercial	@ $25,000/parcel	=	$N/A
Residential	@ $40,000/parcel	=	$N/A

TOTAL $N/A

Damages: Proximity	$695,000.00	
Consequential	$N/A	
Cost to Cure	$ 1,500.00	
TOTAL		$696,500.00

SUB-TOTAL: $4,001,103

Net Cost		$4,001,103
Scheduling Contingency	55 %	$2,200,607
Adm/Court Cost	60 %	$2,400,662
TOTAL		$8,602,372

Total Cost ® **$8,600,000.00**

Prepared By: Joe B. Harris III

Reviewed / Approved:
Howard P. Copeland
R/W Administrator

Note: Accuracy of estimate is the sole responsibility of the Preparer.
Note: The Market Appreciation(40%) is not included is this Preliminary Cost Estimate.

REVISED: 2-8-08

Value Analysis & Conclusion

VALUE ANALYSIS AND CONCLUSION

GENERAL

This section describes the value analysis procedure used during the value engineering study on the Widening of SR 144 Project located in Bryan County, Georgia. It is followed by separate narratives and conclusions concerning:

- Value Engineering Workshop Participants
- Economic Data
- Function Analysis (Project Purpose and Need)
- Creative Idea Listing and Judgment of Ideas

A systematic approach was used in the VE study and the key procedures involved were organized into three distinct parts: 1) pre-study, 2) VE orientation meeting and workshop, and 3) post-study. A Task Flow Diagram, which outlines each of the procedures included in the VE study, is attached for reference.

PRE-STUDY PREPARATION

Pre-study preparation for the VE effort consisted of scheduling study participants and tasks and gathering necessary project documents from the GDOT design team. Information relating to alternative analysis and phasing is also very important, as it tends to drive the construction methods. Information relating to the preliminary cost estimate prepared by GDOT was used as the basis for the comparison/analysis during the VE study.

VALUE ENGINEERING WORKSHOP EFFORT

The VE workshop effort consisted of a 30-hour workshop beginning with an orientation meeting on December 2, 2008 and the final VE Presentation on December 5, 2008. During the workshop, the VE job plan was followed in compliance of FHWA and GDOT guidelines for the conduct of VE studies. The job plan guided the search for alternatives to mitigate or eliminate high cost drivers and potential risk elements. It includes six phases:

- Information Phase (including function analysis, discussions of project purpose and need)
- Speculation Phase
- Analysis Phase
- Development Phase
- Presentation Phase
- Implementation Phase

Value Engineering Study Task Flow Diagram

Preparation Effort

Coordination Project
- Verify Schedule
- Suggest Format for Designer Presentation
- Outline Project Responsibilities
- Outline Needed Background Data
- Define *Project Value Objectives*
- Identify Project Constraints

→

Prepare for Workshop
- Collect Project Data
- Distribute Data to Team Members
- Team Members Become Familiar with Project

→

Construct Cost Models
- Construct Cost Models
- Construct Graphic Function Analysis
- Outline High Cost Areas

→

LCC Model
- Roadway
- Bridges
- MOT
- Energy
- User Impact

Workshop Effort

Information Phase
- Introduction by VETL
- Project Description and Presentation by Designer
- Outline Owner Requirements
- Review Project Data
- Visit Project Site (Alt.)

→

Function Identification and Analysis Phase
- Analyze Project Costs and Energy Usage
- Perform Function Analysis and FAST Diagram
- Identify High Cost and Energy Areas
- Calculate Cost/Worth Ratios
- Identify Paradigms

List Ideas Generated During Function Analysis

→

Speculation Phase
- Introduction by VETL
- Creative Idea Listing:
  - Quantity of ideas
  - Association of Ideas
- Brainstorm
- Do Creative Thinking
  - Group Thinking
  - Individual Thinking
- Use Checklist for Ideas

→

Evaluation Phase
- Eliminate Impractical Ideas
- Rank Ideas with Advantages/ Disadvantages
- Evaluate Alternatives
  (Include Non-Economic considerations: Safety, Reliability, Environment, Aesthetics, O&M, etc.)
- Select Best Ideas for Implementation

→

Development Phase
- Develop Proposed Alternatives
- Prepare Alternative Design Sketches
- Estimate Costs
- Perform Life Cycle Comparison
  - Initial Cost
  - Redesign Cost
  - O&M Cost
  - LCC Cost

→

Presentation Phase
- Summarize Findings
- Present VE Ideas to Owner/ User/Designer
- Oral Presentation

Post-Workshop Effort

VE Study Report
- Develop Implementation VE Report
- Designer Prepares Responses to VE Report
- Owner Evaluates Recommendations

→

Implementation Phase
- Participate in Implementation Meeting with Owner/User/ Designer/ VE Team, as needed
- Prepare Final VE Report

→

Final Acceptance
- Redesign by Designer

Information Phase

At the beginning of the study, the decisions that have influenced the project design and proposed construction methods had to be reviewed and understood. For this reason, the GDOT design team presented information about the project to the VE team on the first day of the VE workshop. Following the presentation meeting, the VE team spent the remainder of the first day reviewing the project documents, discussing the project purpose and need, and identifying the key elements of the project. Throughout the study the following documents were utilized to establish guidelines for action and for determining cost implications for the various alternatives:

- Preliminary Design Submittal - Plan and Profile – Widening of SR 144 from CR 100 (Timber Trail Rd) to CR 154 (Belfast Keller Rd), dated November 12, 2008, prepared by GDOT.

Speculation Phase

This VE study phase involves the analysis of the project's functions and the creation and listing of ideas. Function analysis is a means of evaluating a project to see if the expenditures actually perform the requirements of the project, or if there are disproportionate amounts of money spent on support functions. These elements add cost to the final product, but have a relatively low worth to the basic function. This creates a high cost-to-worth ratio and the VE team targets these areas for value improvement. GDOT design criteria was compared to the as designed drawings for general conformance of the typical section.

The VE team then generates as many ideas as possible to provide the necessary functions within the highway project at a lower total life cycle cost, or to improve the quality of the project. Methods to improve on the maintenance of traffic plan were also discussed. Judgment of the ideas was restricted at this point. The VE team was looking for a large quantity of ideas and free association of ideas. Creative idea worksheets were organized by project elements.

Analysis Phase

During this phase of the workshop, the VE team judged the ideas generated during the speculation phase in comparison to project objectives established by GDOT. The team evaluated each of the VE ideas for feasibility and incorporation into the project. Advantages and disadvantages of each idea were discussed to find the best ideas for development. Ideas found to be irrelevant or not worthy of additional study were discarded. Those which represented the greatest potential for cost savings or improvement to the project were then developed further to be presented during the presentation phase.

To assist the team in ranking the creative ideas, each of the criteria were discussed, and the following criteria definitions were developed in the project purpose and need.

Construction Cost – The initial cost of the material is important and should be considered.
Safety – Safety is very important and must control in all decision making.
Level of Service – The projected LOS must be achieved to meet the purpose and need
Impact Upon Trucks – There is a relatively high percentage of trucks in the area
Life Cycle Costs – The costs of operating and maintaining the highway is extremely important. These costs would include labor and materials over the next 30 years.
Right of Way Cost – It is important to minimize R/W purchase if possible.

The VE team would have liked to develop all the ideas that were generated, but time constraints limited the number of ideas that could be developed. Therefore, each idea was compared with the present design concept in terms of how well it met the design criteria. Advantages and disadvantages were discussed and the ideas were rated on a scale of one to 5, with the best ideas rated 5. Ideas rated four or higher were generally developed into written VE alternatives.

Development Phase

Each highly-rated idea was expanded into a workable solution. The development consisted of a description of the alternative, life cycle cost comparisons where applicable, and a descriptive evaluation of the advantages and disadvantages of the proposed alternatives. Each alternative was written with a brief narrative to compare the original design to the proposed change. Sketches and design calculations, where appropriate, were also prepared in this part of the study. Analysis also compared each new alternative with others presented in the design report. The VE alternatives and comparisons are included in the section entitled: ***Study Results***.

Presentation Phase

The last phase of the VE team's workshop was to present the recommendations. The presentation was held on December 5, 2008 and included personnel from GDOT. During the meeting, a handout was distributed that included a summary listing of the VE study Alternatives and Design Suggestions. These documents were presented to give the attendees an executive summary of the proposals and the key findings of the VE team.

POST STUDY PROCEDURES

The post-study portion of the VE study includes the preparation of this Value Engineering Study Report. Personnel from the GDOT and the design team will analyze each alternative and prepare a short response, recommending either incorporating the alternative into the project, offering modifications before implementation or presenting reasons for rejection. LZA is available at your convenience as you review the alternatives. Please do not hesitate to call on us for clarification or further information as you consider an implementation approach.

Implementation Phase

Following distribution of the VE report and collection of written comments from all parties, a VE implementation phase meeting is typically scheduled. At this time, each VE alternative will be considered, discussed, and a final disposition made. During this process, a VE alternative may be accepted as written, rejected for cause, modified to improve the idea, or in some cases, the idea may need further study to establish its merits.

VALUE ENGINEERING STUDY AGENDA

Lewis & Zimmerman Associates, Inc. (LZA) will facilitate a 30-hour value engineering (VE) study on the Preliminary Design Submittal of the **SR 144 Widening From CR 100 (Timber Trail Road) to CR 154 (Belfast Keller Road)**, STP 0630(10), P.I. No. 532370, Bryan County, Georgia. The Georgia Department of Transportation (GDOT) project management and design team will be available to formally present the project at the beginning of the workshop; attend a presentation of the VE alternatives at the conclusion of the VE study; and be available to answer questions during the VE study effort.

The VE study will follow the outline described below and be conducted December 2 - 5, 2008 at the offices of:

GDOT
600 West Peachtree Street, 5th Floor
Atlanta, Georgia 30308
Conference Room 5CR1L2

The point-of-contact is Ms. Lisa Meyers, GDOT Value Engineering Coordinator, who may be reached at 404-631-1770.

VE STUDY AGENDA

Tuesday, December 2, 2008

8:00 am - 9:00 am **VE Team Members Arrive and Review Documents**

10:00 am – 11:00 am **Owner's/Designer's Presentation**

GDOT and the design consultants will present information concerning the project including, but not limited to: the Purpose and Need for the project, rationale for design; criteria for specific areas of study, project constraints and the reasons for design decisions.

11:00 am – 12:00 noon **VE Team Reviews Project Documents**

12:00 noon - 2:00 pm **Lunch and Site Visit**

2:00 pm - 3:00 pm **Information Phase**

The VE team will continue their familiarization with the cost models and project data for each area of study. The cost models will be refined, as necessary. The VE team will define the function of each project element or system in the cost model, select the primary or basic functions, and determine the worth, or least cost, to provide the function. Cost/worth or value index ratios will be calculated, and

high cost/low worth areas for study identified. In addition, the VE team will continue defining the function of each element/system to gain a thorough understanding of the projects' Purpose and Need.

3:00 pm – 4:00 pm **Function Analysis**

The team will identify all project functions required to meet the established purpose and need. Functions will be identified as to basic, required secondary, secondary, or project goals.

4:00 pm - 5:00 pm **Speculation Phase**

The VE team will conduct a brainstorming session and list as many ideas as possible for consideration. The aim is to obtain a large quantity of ideas through free association, by eliminating roadblocks to creativity and deferring judgment.

Wednesday, December 3, 2008

8:00 am - 10:00 am **Speculation Phase (cont.)**

The VE team will continue the brainstorming exercise to capture ideas to improve the project in terms of initial and life cycle cost, technical aspects, schedule, and constructibility issues.

10:00 am – 12:00 noon **Analysis Phase**

The VE team will analyze the ideas listed in the creative phase and select the best ideas for further development.

12:00 noon - 1:00 pm **Lunch**

1:00 pm - 5:00 pm **Development Phase**

VE team will develop creative ideas into alternate design solutions. Initial and life cycle cost estimates comparing original and proposed alternatives will be prepared. Selected alternatives for change will be developed and supported with sketches, calculations and written substantiation.

Thursday, December 4, 2008

8:00 am – 12:00 noon **Development Phase (cont.)**

12:00 noon - 1:00 pm **Lunch**

1:00 pm - 5:00 pm **Development Phase (cont.)**

Upon completion of the Development Phase, the VE team leader will prepare the summary worksheets based on the alternatives developed by the VE team. The summary worksheets form the basis of the informal oral presentation to be made to GDOT, local representatives, and the PBS&J design team representatives. The team will review all documentation and prepare for the presentation.

Friday, December 5, 2008

8:00 am - 9:00 am **Development Phase and Preparation for Presentation**

9:00 am – 12:00 noon **Presentation Phase**

Upon completion of the Development Phase, the VE team leader will prepare the summary worksheets based on the alternatives developed by the VE team. The summary worksheets form the basis of the informal oral presentation to be made to GDOT, local representatives, and the design team representatives. The team will review all documentation and prepare for the presentation.

Noon - Adjourn

POST-STUDY PHASE

Upon completion of the value engineering study, the VE team leader will prepare the Value Engineering Study Report and submit it to GDOT. The report will include the following material:

- Project description and design concept of project
- Cost models and graphic function analysis worksheets
- Value engineering alternatives: original design and proposed alternatives, including sketches, design calculations and initial and life cycle estimates
- Potential contract savings (capital construction and life cycle costs)

The GDOT design team will independently review the VE alternatives and classify them as accepted, accepted with modifications, needs further study, or rejected—accompanied by the reasons for rejection. A meeting with all stakeholders will then be convened to decide which VE alternatives to implement.

VE TEAM MEMBERS

David Hamilton, PE, CVS, CCE, LEED [AP]	VE Team Leader/Civil	Lewis & Zimmerman Assoc.
Joe Leoni, PE	Highway Design Engineer	ARCADIS
Harley Griffin, PE	Construction Engineer	Delon Hampton
Michael Moilanen, PE	Bridge Engineer	ARCADIS

VALUE ENGINEERING WORKSHOP PARTICIPANTS

The VE Team was organized by GDOT and Lewis & Zimmerman Associates, Inc. to provide specific expertise on the unique project elements involved. Team members consisted of a multidisciplinary group with professional highway design, construction, and environmental permitting experience, and a working knowledge of VE procedures. Members of the team consisted of the following professionals:

VE Team

David Hamilton, PE, CVS, CCE, LEED ^{AP}	VE Team Leader/Civil	Lewis & Zimmerman Assoc.
Joe Leoni, PE	Highway Design Engineer	ARCADIS US, Inc.
Harley Griffin, PE	Construction Engineer	Delon Hampton
Mike Moilanen, PE	Bridge Engineer	ARCADIS US, Inc.

GDOT

Lisa Myers	VE Coordinator	GDOT

DESIGNER'S PRESENTATION

An overview of the project was presented on Tuesday, December 2, 2008, by the GDOT design team. The purpose of this meeting, in addition to being an integral part of the Information Gathering Phase of the VE Study, was to bring the VE Team "up-to-speed" regarding the overall project specifics including traffic projections, accident history, drainage elements, construction phasing, local permitting issues, and estimated project cost. Additionally, the meeting afforded the design staff the opportunity to highlight in greater detail, those areas of the project requiring additional or special attention. An attendance list for the meeting is attached.

VALUE ENGINEERING TEAM'S FORMAL ORAL PRESENTATION

A formal oral VE presentation was conducted on Friday, December 5, 2008 to review the VE alternatives with the GDOT project management and design staff. The attendees received a copy of the Presentation Outline, and **Summary of Potential Cost Savings**. An attendance list for the meeting is attached.

VE STUDY SIGN-IN SHEET

Project No.: STP00-0630-00(010) County: Bryan PI No.: 532370 Date: 12/2-5/2008

NAME	EMPLOYEE ID NO.	DOT OFFICE OR COMPANY	PHONE NUMBER	EMAIL ADDRESS
Lisa L. Myers	00244168	Engineering Services	404-631-1770	lmyers@dot.ga.gov
Joe Leoni		ARCADIS	770.431.8666	Joe.Leoni@ARCADIS-US.Com
HARLEY GRIFFIN		DELON HAMPTON & ASSOC.	404-524-8030	hgriffin@delonhampton.com
DAVE HAMILTON		LZA	253-229-7703	DAHAMILTON@LZA.COM
Mike Moilanen		ARCADIS	770-431-8666	Michael.Moilanen@ARCADIS-US.com
KEN WERHO	00258268	GPOT TO DES REV	404-635-8144	KWERHO@DOT.GA.GOV
James Magnus	00208160	Const office		
RON WISHON	00208160	ENG SRVCS	404-631-1753	rwishon@dot.ga.gov
SHAUN WILLIAMS	00879728	BRIDGE DGN	404.631.1888	SLWILLIAMS@DOT.GA.GOV
Slade Cole		DS Construction	912-651 2144	
Anthony Cook		DS Construction-Estimator	912-427-5747	
Travis Dent		DS Design	912 427 5718	
Sheree Smart		DS Environmental	912 427 5756	

ECONOMIC DATA

Economic criteria used for evaluation were developed by the VE team with information gathered from the Federal Office of Management & Budget. To express costs in a meaningful manner, the VE team alternatives are presented on the basis of discounted present worth. Criteria for the planning project period and interest rates are based on the following parameters:

Year of Analysis:	2008
Construction Dollars Based Upon:	2008
Economic Planning Life:	30 years starting in 2008
Bond (Discount) Rate:	3.1%
Inflation/Escalation Rate:	0.0% (Constant dollar method)
Net Discount Rate:	3.1%
Uniform Present Worth (UPW) Factor:	19.3495
Cost of Labor ($/hr)	$50/hr

Schedule of Work

Right-of-way is scheduled to be complete in 2009, with construction completed in 2011. This allows for a 24 month construction duration depending upon award date, shop drawing approval, and material availability.

Total Present Worth

Discussion during the VE study included impacts of 30-year present worth cost for major elements, however no life cycle calculations were completed.

VE Alternatives Mark-up

Cost estimates were prepared for each of the VE alternatives using unit prices contained in the project cost estimate and unit prices in the GDOT cost database. The unit prices contained in the estimate are considered to include all contractor mark-ups, mobilization, overhead, and profit. A markup of 11% was added to account for engineering and construction services.

COST MODEL

The Widening of SR 144 Project will greatly improve safety and capacity along the alignment in this busy of area of Bryan County while reducing accidents caused by deficiencies in the corridor. To achieve these benefits, a considerable investment in the infrastructure is required, including construction of an expanded roadway section, raised median, signalized intersections, addition of sidewalks, and acquisition of the needed right of way. The total construction cost of the project is estimated at approximately $18.0M, plus right-of-way and utilities in the amount of $9M. Since the cost of right-of-way is a substantial portion of the cost of the required construction, the total width of the section must be reviewed carefully to ensure proper investments are made.

Project Cost

The data used to analyze costs by design element and are presented on the *Cost Histogram table*. To gain an overview of the total project cost, the *Pareto Analysis* was prepared. This table presents total project costs by roadway element. From this analysis, it can be seen that grading and drainage is a major component of the overall project cost and appears to be driven by the final grade of the roadway. Increasing the profile along the segment is adding some 250,000CY of material to the project cost and should be reviewed against the benefits in improved drainage along the roadway. Other cost components such as base and paving appear prudent for a road widening project.

COST HISTOGRAM

PROJECT: SR 144 WIDENING FROM TIMBER TRAIL RD TO BELFAST KELLER RD
Project STP-0630(10)

TOTAL PROJECT	COST	PERCENT	CUM. PERCENT
Grading and Drainage	7,541,394	41.78%	41.78%
Base and Paving	6,429,663	35.62%	77.40%
Lump Sum Items	1,004,968	5.57%	82.97%
Construction Contingency	975,687	5.41%	88.37%
Major Structures	861,120	4.77%	93.14%
Engineering & Inspection	813,072	4.50%	97.65%
Miscellaneous	424,300	2.35%	100.00%
Construction Subtotal	*18,050,204*	100.00%	
Rights of Way	8,602,372		
Reimbursable Utilities	350,000		
TOTAL CONSTRUCTION & RIGHT OF WAY	**$ 27,002,576**	Comp Markup:	21.28%

80%

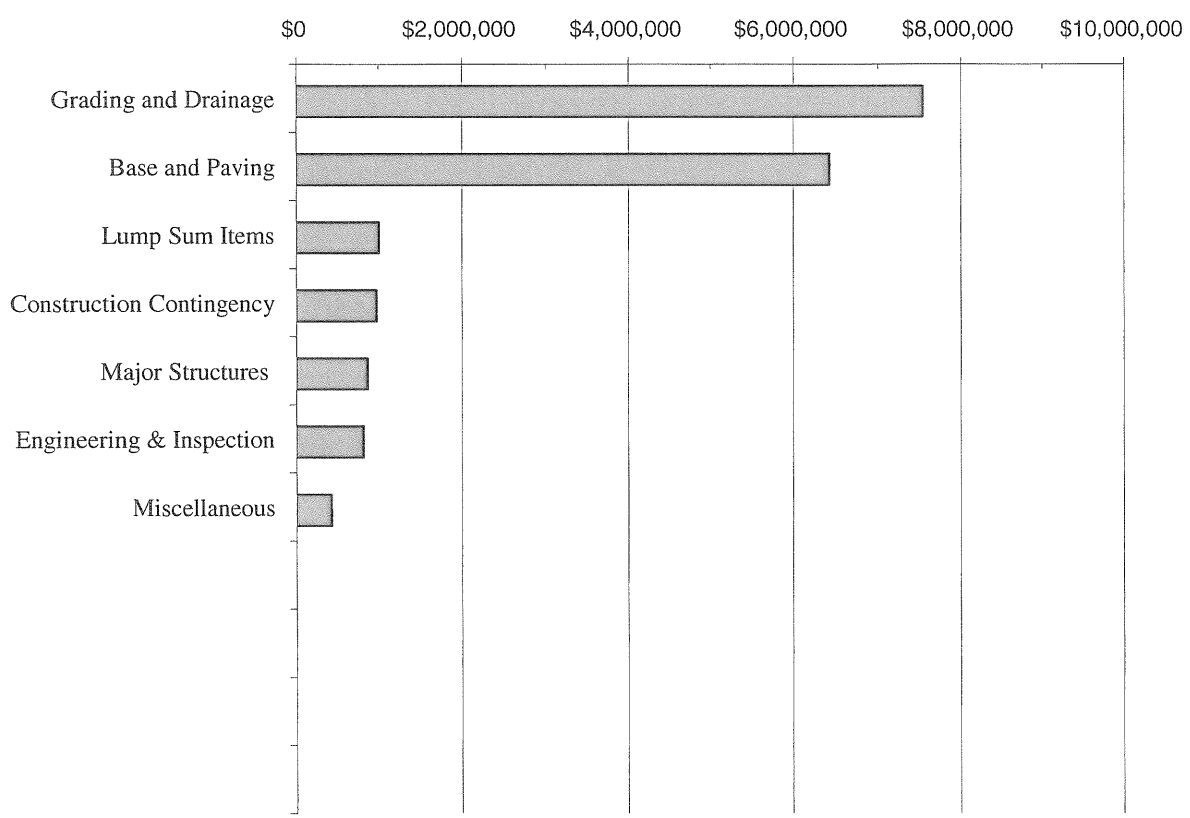

FUNCTION ANALYSIS

A Function Analysis of the SR 144 Widening Project was prepared to: (1) understand the project purpose and need, (2) define the requirements for each project element, and (3) to ensure a complete and thorough understanding by the VE Team of the basic function(s), and identify other public goals through the corridor. Random Function Analysis Worksheets for the project elements are attached. Function Analysis is a means of evaluating a project to see if the expenditures actually perform the requirements of the project, or if there are disproportionate amounts of money spent on support functions. These support elements add cost to the final product, but may have a relatively low worth to the basic function. This creates a high cost-to-worth ratio.

The Function Analysis sheets include verb and noun function definition of the element, and the VE Teams identification of basic or secondary functions. This exercise stimulated the VE Team members to think in terms of the areas in which to channel their creative idea development.

The key issues that evolved from the function analysis session were the concurrence of the project needs and purpose. The basic function of the project is to "Increase Capacity", and "Improve LOS". Adding turn lanes, redesigning the intersections, and improving the sight stopping distance will greatly improve safety, reduce delays in this busy Bryan County corridor, and help to meet other required project goals.

Other key functions are presented on the Random Function Analysis forms.

The goals as established for the project appear consistent with the functions identified by the VE team. Therefore the function analysis justifies the project need and purpose and will greatly improve driving conditions along this corridor and aid in the reduction of accidents. This project will be a marked improvement in the aesthetics of the corridor and provides added functionality for bikes/pedestrians in the area.

RANDOM FUNCTION ANALYSIS

PROJECT: **SR 144 WIDENING FROM CR 100 TO CR 154** SHEET NO.: **1 of 1**
Project No. STP00-0630-00(010) - Bryan County, Georgia

DESCRIPTION	FUNCTION		
	VERB	NOUN	KIND
Total Project Purpose and Need	***Increase***	***Capacity***	***B***
	Reduce	***Accidents***	***B***
	Accommodate	***Development***	***HO***
	Accommodate	Bikes/ Pedestrians	RS
	Reduce	Delays	RS
	Improve	Access	G
	Encourage	Development	RS
	Eliminate	Deficiencies	RS
	Reduce	Maintenance	G
	Control	Traffic	RS
	Improve	***LOS***	***B***
	Accommodate	***Growth***	***RS***
	Maintain	Schedule	RS
	Control	Budget	RS
	Protect	Environment	RS
	Improve	Life	G
	Manage	Stormwater	RS
	Relocate	Utilities	RS
	Span	Waterway	RS
	Control	Erosion	RS
	Increase	Revenue	G

Function defined as: Action Verb
Measurable Noun

Kind: B = Basic
S = Secondary
RS = Required Secondary
HO = Higher Order
LO = Lower Order
G = Goal

CREATIVE IDEA LISTING AND JUDGMENT OF IDEAS

During the creative phase, numerous ideas, alternative proposals and/or recommendations were generated for the SR 144 Widening Project using conventional brainstorming techniques as recorded on the following pages.

The creative session yielded a total of 26 ideas for further consideration by the team. These ideas were grouped into the following categories with letter prefixes to identify the area of study. For example, Bridge ideas have a designation of "B", and Alignment ideas are identified with a prefix of "A".

CATEGORY	PREFIX
Alignment	A
Section	S
Profile	P
Bridge	B

These ideas were then discussed between the VE team members to identify the advantages and disadvantages of each. The VE Team compared each of the ideas with the as-designed solution determining whether it improved value, was equal in value, or lessened the value of the presented solution. To assist the team in ranking the creative ideas, each of the criteria were discussed, and the following criteria definitions were developed from the statement of project need as presented by GDOT on the first day of the VE study.

Construction Cost – The initial cost of the material is important and should be considered.
Safety – Safety is very important and must control in all decision making.
Level of Service – The projected LOS must be achieved to meet the design year projections
Impact Upon Trucks – There is a reasonably high percentage of trucks in the area
Life Cycle Costs – The costs of operating and maintaining the highway is extremely important. These costs would include labor and materials over the next 30 years.
Right-of-Way Cost – It is important to minimize ROW costs if possible.

Creative Idea Ranking

The ideas were then ranked on a qualitative scale of 1 (poor) to 5 (excellent) on how well the VE team believed the idea met the project purpose and need criteria shown above. The higher rated ideas, with scores of 4 or 5, were then developed into formal alternatives and included in the Study Results section of the report. Some ideas were judged to have minimal cost impacts on the project but provided enhancements in the form of improved safety, accident reduction, constructibility or potential to save unknown or hidden costs. These were given the designation "DS" which indicates a design suggestion. This designation is also used when an idea increases cost resulting from improving the functionality of the project or system, and is deemed by the VE Team to be of significant value to the owner or designer.

Typically, all ideas rated 4 or 5 are developed by the VE team and included in the Study Results section. When this is not the case, an idea was combined with another related idea or discarded, as a result of additional research, which indicated the concept as not being cost-effective or technically feasible. All readers are encouraged to review the **Creative Idea Listing and Evaluation** worksheets since they may suggest additional ideas that can be applied to the design.

CREATIVE IDEA LISTING

PROJECT: **SR 144 WIDENING FROM CR 100 TO CR 154**
Project No. STP00-0630-00(010) - Bryan County, Georgia

SHEET NO.: **1 of 2**

NO.	IDEA DESCRIPTION	RATING
PROFILE (P)		
P-1	Lower the profile to existing grade and reduce the amount of required import material.	4
SECTION (S)		
S-1	Use a single, multi-use path in lieu of two sidewalks.	4
S-2	Use 11 ft lanes on the inside in lieu of 12 ft. Keep 12 ft lanes on the outside.	4
S-3	Use 45 mph design speed for the whole alignment in lieu of a mix of 45 and 55mph.	DS
S-4	Use 18 ft for median in lieu of 20 ft and 24 ft.	4
S-5	Use concrete paved median in lieu of grassed median.	4
S-6	Use geogrid reinforcement and reduce the amount of base material.	4
S-7	Use 24 inch wide curbs in lieu of 30 inch.	4
S-8	Place the sidewalk on one side of the road only. Put the sidewalk on the West side.	4
S-9	Reduce the width of shoulders from 12 ft to 8 ft at locations without sidewalks.	4
S-10	Add fencing to restrict the movement of deer across the road; reduce accidents.	2
S-11	Use three lanes in lieu of four and retain the existing bridge. Purchase all required R/W.	5
S-12	Use more ditches and less curb and gutter; assume a four-lane section.	4
ALIGNMENT (A)		
A-1	Use right in/right out only on CR 133 (Sterling RD); modify the street access.	DS
A-2	Retain the existing alignment at STA 172+00.	Drop
A-3	Reduce the project termination point on the south end from STA 275 to STA 219+00	5
A-4	Do nothing.	Drop
A-5	Reduce the radius at STA 172+00 from 1900 ft to 650 ft and add about a 6% superelevation.	4
A-6	Close the roadway access point at STA 159+00.	DS
A-7	Close one access point at Sterling Road.	DS
A-8	Close the access point at Rabbit Hill Road.	DS
A-9	Add a signal at STA 172+00 then do not change the alignment of the road.	5

Rating: 1→2 = Not to be developed 3→4 = Varying degrees of development potential 5 = Most likely to be developed
DS = Design suggestion ABD = Already being done

CREATIVE IDEA LISTING

PROJECT: **SR 144 WIDENING FROM CR 100 TO CR 154**
Project No. STP00-0630-00(010) - Bryan County, Georgia

SHEET NO.: **2 of 2**

NO.	IDEA DESCRIPTION	RATING
BRIDGE (B)		
B-1	Reduce the median width on the bridge from 20 ft to 8 ft.	5
B-2	Build a new parallel bridge in lieu of widening the existing bridge.	4
B-3	Add a sidewalk on only the west side of the bridge (new construction side). Do not add sidewalk on the existing bridge.	4
B-4	Consider a flat slab structure for the bridge. (Combine with B-2).	4

Rating: 1→2 = Not to be developed 3→4 = Varying degrees of development potential 5 = Most likely to be developed
DS = Design suggestion ABD = Already being done