ORIGINAL TO GENERAL FILES

D.O.T. 66

DEPARTMENT OF TRANSPORTATION
STATE OF GEORGIA

INTERDEPARTMENT CORRESPONDENCE

FILE BRST-0590(7) Coffee County
P. I. No. 442971

OFFICE Preconstruction

DATE July 15, 2002

FROM C. Wayne Hutto, Assistant Director of Preconstruction

TO SEE DISTRIBUTION

SUBJECT PROJECT CONCEPT REPORT APPROVAL

Attached for your files is the approval for subject project.

CWH/cj

Attachment

DISTRIBUTION:

David Mulling
Harvey Keepler
Jerry Hobbs
Herman Griffin
Michael Henry
Phillip Allen
Marta Rosen
Paul Liles
Ben Buchan
David Crim
BOARD MEMBER

D.O.T. 66

DEPARTMENT OF TRANSPORTATION
STATE OF GEORGIA

INTERDEPARTMENT CORRESPONDENCE

FILE BRST-0590(7) Coffee County
P.I. No. 442971

OFFICE Preconstruction

DATE July 1, 2002

FROM C. Wayne Hutto, P.E., Assistant Director of Preconstruction

TO Frank L. Danchetz, P.E., Chief Engineer

SUBJECT **PROJECT CONCEPT REPORT**

This project is the replacement of a structurally deficient bridge on SR 268 over Roses Creek, 1.1 miles west of Broxton, Georgia. The existing bridge, constructed in 1959, is load limited with a sufficiency rating of 48. State Route 268 at this location is a rural two lane roadway with 12' travel lanes with rural shoulders. This section of SR 268 is functionally classified as a rural major collector. Traffic is projected to be 2,100 VPD and 3,100 VPD in the years 2009 and 2029 respectively. The posted speed and the design speed are 55 MPH.

The construction proposes to construct a new 90' x 40' concrete bridge over Roses Creek at the existing bridge site. The approaches will consist of two, 12' lanes with 8' rural shoulders (2' paved). Traffic will be maintained during construction utilizing an on-site detour.

Environmental concerns include requiring a COE 404 Permit; a Categorical Exclusion will be prepared; a public hearing is not required; time saving procedures are appropriate.

The estimated costs for this project are:

	PROPOSED	APPROVED	PROG DATE	LET DATE
Construction (includes E&C and inflation)	$875,000	$1,100,000	2006	FY-06
Right-of-Way	$ 20,000	$ 10,000		
Utilities*	LGPA	LGPA		

*Coffee County signed LGPA for utilities on 7-20-99.

BRST-0590(7) Coffee
July 1, 2002

This project is in the STIP. I recommend this project concept be approved.

CWH:JDQ/cj

Attachment

CONCUR _____
Thomas L. Turner, P.E., Director of Preconstruction

APPROVE _____
Frank L. Danchetz, P.E., Chief Engineer

DEPARTMENT OF TRANSPORTATION
STATE OF GEORGIA

INTERDEPARTMENTAL CORRESPONDENCE

FILE: BRST-0590(7) Coffee
P.I. Number 442971

OFFICE: Engineering Services

DATE: June 28, 2002

FROM: David Mulling, Project Review Engineer REW

TO: Wayne Hutto, Assistant Director of Pre-construction

SUBJECT: **CONCEPT REPORT**

We have reviewed the concept report submitted June 18, 2002 by the letter from Ben Buchan dated June 11, 2002, and have no additional comments.

The costs for the project are:

Construction	$727,606
Inflation	$74,580
E&C	$72,761
Reimbursable Utilities	$15,000
Right of Way	$20,000

DTM/REW

c: Ben Buchan, Attn: Ted Cashin

DEPARTMENT OF TRANSPORTATION
STATE OF GEORGIA

INTERDEPARTMENT CORRESPONDENCE

FILE **BRST-0590(7), Coffee County**
S.R. 268/Ambrose-Broxton Road over Roses Creek
P.I. No. 442971

OFFICE Atlanta

FROM James B. Buchan, State Consultant Design Engineer

DATE June 11, 2002

RECEIVED
JUN 18 2002

TO Wayne Hutto, Assistant Director of Preconstruction

SUBJECT **PROJECT CONCEPT REPORT**

Attached is the original copy of the Concept Report for your further handling and approval in accordance with the Plan Development Process (PDP).

People on the distribution list below should review the Concept Report and send comments and/or the signature page to the Preconstruction office within 10 days as per the PDP.

Distribution:

David Mulling, Project Review Engineer
Harvey Keepler, State Environmental/Location Engineer
Marion Waters, State Traffic Operations Engineer
Marta Rosen, State Transportation Planning Administrator
Herman Griffin, State Transportation Programming Engineer
David Crim, District 4 Engineer
Paul Liles, State Bridge Design Engineer

DEPARTMENT OF TRANSPORTATION
STATE OF GEORGIA

Office of Consultant Design

PROJECT CONCEPT REPORT

Project Number: BRST-0590 (7)
County: Coffee
P. I. Number: 442971

Federal Route Number: N/A
State Route Number: 268

DESCRIPTION: SR 268/Ambrose-Broxton Rd over Roses Creek
Recommendation for approval:

DATE 6-14-02 _____
Project Manager

DATE 6-14-02 _____
State Consultant Design Engineer

The concept as presented herein and submitted for approval is consistent with that which is included in the Regional Transportation Plan (RTP) and/or the State Transportation Improvement Program (STIP).

DATE_____ _____
State Transportation Planning Administrator

DATE_____ _____
State Office of Financial Management Administrator

DATE_____ _____
State Environmental/Location Engineer

DATE_____ _____
State Traffic Safety and Design Engineer

DATE_____ _____
District 4 Engineer

DATE_____ _____
State Project Review Engineer

DATE_____ _____
State Bridge and Structural Design Engineer

Project Concept Report page __2___
Project Number: BRST-0590 (7)
P. I. Number: 442971
County: Coffee

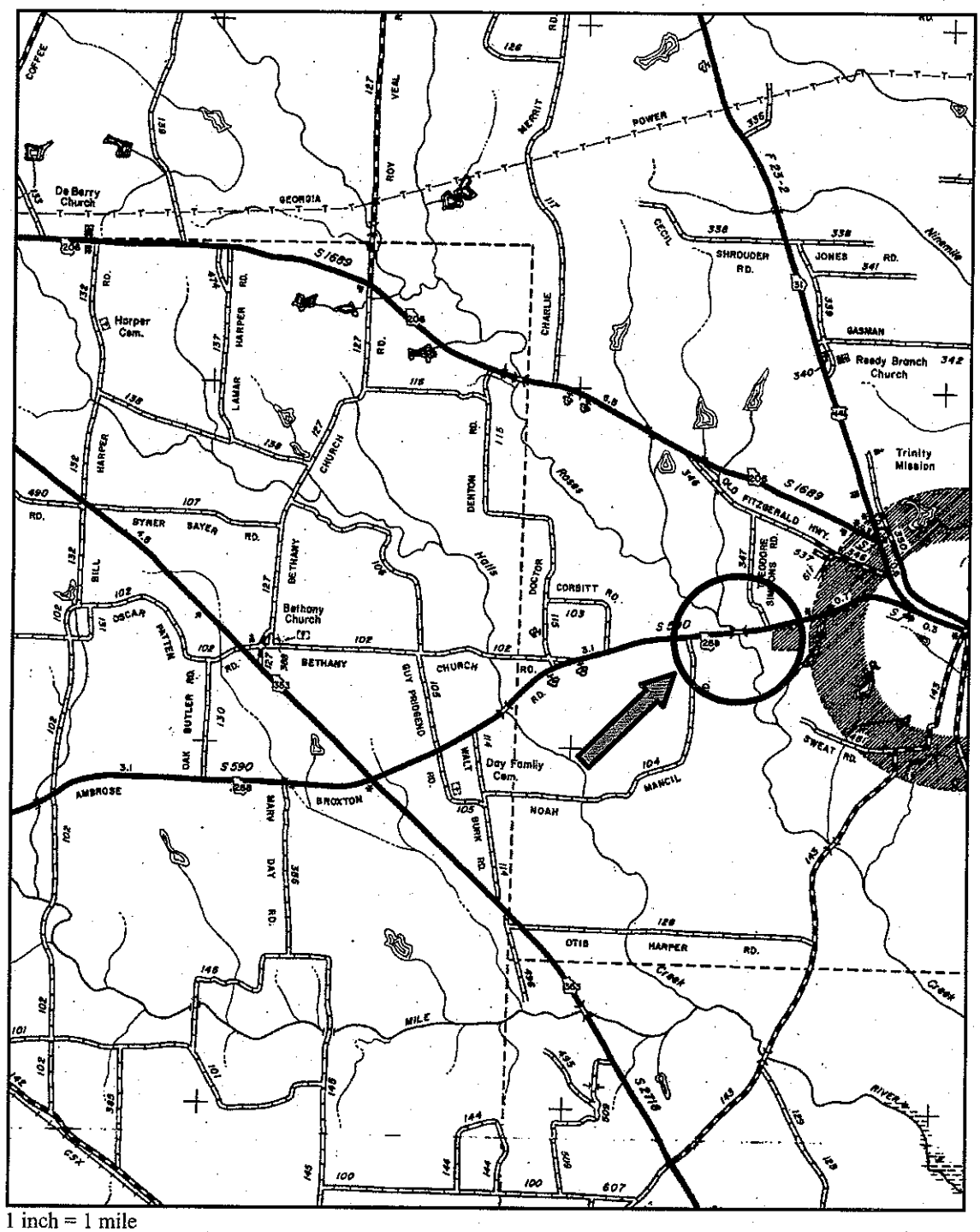

Scale: 1 inch = 1 mile

Location Map

Project: BRST-0590 (7) Coffee County **PI No.:** 442971-

Description: SR 268/Ambrose-Broxton Road over Roses Creek 1.1 mi W of Broxton

Need and Purpose: See attached Need & Purpose Statement.

Description of the proposed project: Project BRST-0590 (7) is a bridge replacement project in Coffee County on S.R. 268 over Roses Creek. The total project length is approximately 2000 feet (0.38 miles), beginning at M.P. 8.29 and extending to M.P. 8.67. The purpose of this project is to replace a structurally deficient and functionally obsolete bridge on SR 268 over Roses Creek. The existing bridge sufficiency rating is currently 48.25 (based on H 15 design live load). There is a similar proposed bridge replacement project, BRST-0590 (6), S.R. 268 over Halls Creek, approximate one mile west of the Roses Creek site.

Is the project located in a Non-attainment area? ____**Yes** ___X___**No**

PDP Classification: Minor

Project Designation: Full Oversight ( ), Exempt(**X**), State Funded( ), or Other ( )

Functional Classification: Rural Major Collector Road

U. S. Route Number(s): None **State Route Number(s):** 268

Traffic (AADT):
Current Year: (2009) 2100 Design Year: (2029) 3100

Existing design features:

- Typical Section: 2-12 ft. travel lanes with variable width grass shoulders.
- Posted speed 55mph Maximum degree of curvature: 1 deg. 0 min.
- Maximum grade: 3.3%
- Width of right of way: varies from 100' to 200'
- Major structures: Concrete T Beam bridge; 3 spans at 28'-0" typical for total length of 84 ft. The bridge roadway curb-to-curb clear width is 26 ft. The sufficiency rating is 48.25 (based on H 15 design live load).
- Major interchanges or intersections along the project: None

Proposed Design Features:

Proposed typical section(s): Two 12'-0" travel lanes with 8'-0" shoulders. Typical section attached.

- Proposed Design Speed Mainline 55 mph
- Proposed Maximum grade Mainline 3.3% Maximum grade allowable 4.5%.
- Proposed Maximum grade Side Street N/A Maximum grade allowable 9.0%.
- Proposed Maximum grade driveway N/A
- Proposed Maximum degree of curve 1° 00'. Maximum degree allowable 6° 00'.
- Right of way
  - Width 25 ft additional on the north and south sides.
  - Easements: Temporary ( ), Permanent ( ), Utility ( ), Other ( ).
  - Type of access control: Full ( ), Partial ( ), By Permit (**X**), Other ( ).
  - Number of parcels: 4 Number of displacements: None
    - Business: 0
    - Residences: 0
    - Mobile homes: 0
    - Other: 0
- Structures:
  - Bridges: The proposed concrete bridge will be 40 ft. wide (gutter to gutter) and approximately 90 ft long, consisting of two 12'-0" travel lanes, and 8'-0" shoulders.
  - Retaining walls: None
- Major intersections and interchanges. None
- Traffic control during construction: Traffic will be maintained on a temporary parallel detour structure south of the existing bridge while the proposed bridge is constructed.
- Design Exceptions to controlling criteria anticipated:

	UNDETERMINED	YES	NO
HORIZONTAL ALIGNMENT:	( )	( )	(X)
ROADWAY WIDTH:	( )	( )	(X)
SHOULDER WIDTH:	( )	( )	(X)
VERTICAL GRADES:	( )	( )	(X)
CROSS SLOPES:	( )	( )	(X)
STOPPING SIGHT DISTANCE:	( )	( )	(X)
SUPERELEVATION RATES:	( )	( )	(X)
HORIZONTAL CLEARANCE:	( )	( )	(X)
SPEED DESIGN:	( )	( )	(X)
VERTICAL CLEARANCE:	( )	( )	(X)
BRIDGE WIDTH:	( )	( )	(X)
BRIDGE STRUCTURAL CAPACITY:	( )	( )	(X)

- Design Variances: None
- Environmental concerns: None

- Level of environmental analysis:
  - Are Time Savings Procedures appropriate? Yes (**X**), No ( ),
  - Categorical exclusion anticipated (**X**),
  - Environmental Assessment/Finding of No Significant Impact (FONSI) ( ), or
  - Environmental Impact Statement (EIS) ( ).
- Utility involvement: Underground and overhead telephone on south side.

Project responsibilities:

- Design, Office of Consultant Design
- Right of Way Acquisition, District 4 Preconstruction (Right of Way Office)
- Relocation of Utilities, District Utility Office and Coffee County
- Letting to contract, General Office (Office of Contract Administration)
- Supervision of construction, District 4 Construction Office
- Providing material pits, District 4 Materials Office
- Providing detours. District of 4 Construction Office

Coordination

- Initial Concept Meeting date and brief summary. Attach minutes. N/A
- Concept meeting date: 5/7/2002
- P. A. R. meetings, dates and results. None required.
- FEMA, USCG, and/or TVA Nationwide 404
- Public involvement. PIM for off-site detour
- Local government comments. Coffee County signed for utilities 7/20/99.
- Other projects in the area. BRST-0590(6) SR 268 over Halls Creek PI No. 442970 – similar bridge replacement approximately one mile form Roses Creek site.
- Other coordination to date. None

Scheduling – Responsible Parties' Estimate

- Time to complete the environmental process: 9 Months
- Time to complete preliminary construction plans: 3 Months
- Time to complete right of way plans: 1 Month
- Time to complete the Section 404 Permit: 5 Months
- Time to complete final construction plans: 3 Months
- Time to complete to purchase right of way: 9 Months
- List other major items that will affect the project schedule: N/A

Other alternates considered: (1) Build proposed bridge on same location as the existing alignment with temporary detour to the south; (2) Build proposed bridge parallel and offset to the north from existing, abandon or demolish existing bridge; (3) Build proposed bridge on same location by closing road and detour traffic off-site; (4) No Build or **(5) Bridge Culvert**.

Comments:

Comparison Summary of Concepts 1 - 5

Alternate (1) is selected for this concept.
Alternate (2) was eliminated due additional required right-of-way and an undesirable horizontal alignment shift. Alternate (3) was eliminated due to the length of a suitable off-site detour route. Alternate (4) was eliminated due to deficient design live load (H 15) and long term maintenance cost. **Alternate (5) will be studied during preliminary design.**

Attachments:

1. Concept Meeting Minutes
2. Preliminary Cost Estimates:
    a) Construction including E&C
3. Typical sections,
4. Need and Purpose Statement,
5. Traffic Assignments,
6. Flexible Pavement Design,
7. Bridge Inventory Data Listing,
8. Location and Design Notice (On Minor Projects)
9. Off-Site Detour Map

CONCEPT MEETING MINUTES
MAY 7, 2002

CONCEPT MEETING FOR BRIDGE REPLACEMENT WORK ORDERS
W.O. #53 – SR 268/Ambrose-Broxton Rd over Roses Creek 1.1 mi W of Broxton
Project No.: BRST-0590(7), Coffee County
PI No.: 442971

LOCATION: GADOT District 4 Office
Tifton, GA

Attendees:
Mark Holmberg – Heath & Lineback Engineers
Randy Boykin - Heath & Lineback Engineers
Ted Cashin – GDOT Office of Consultant Design
Joe Burns – GADOT District 4 Environmental
Barbara Thomas – GDOT Planning/Programming
Kim Willis – GDOT District 4 Right of Way
Danny Gay – GDOT District 4 Traffic Operations
Jerry Bruce – GDOT District 4 Utility Engineer
Emory L. Giddens – GDOT District 4 Assistant Utility Engineer
Stacy Aultman – GDOT District 4 – Fitzgerald
Ronnie Hall - GDOT District 4 – Fitzgerald
Jeff Bridges – GDOT District 4 – Tifton
Jasper Stewart – Alltel Telephone - Douglas

Mark Holmberg described the project and a brief overview of the concept report.

Traffic Operations recommended using the on-site detour due to the length of an off-site detour.

District recommended using a pavement design using an asphaltic base material instead of GAB.

Utilities noted that there are power and telephone facilities at the existing bridge.

Environmental had no comments.

PRELIMINARY COST ESTIMATE

DATE: June 11, 2002 PREPARED BY: Heath & Lineback Engineers, Inc.

PROJECT NO.: BRST-0590 (7)

P.I. NO.: 442971 LENGTH: 2000 ft. (0.38 mi)

PROJECT DESCRIPTION: Bridge replacement of the S.R. 268/Ambrose-Broxton Road Roses Creek.

PROPOSED CONCEPT: The proposed typical sections consists of two 12'-0" travel lanes and 8'-0" rural shoulders. Traffic will be maintained on a temporary detour structure while the proposed bridge is constructed.

EXISTING ROADWAY: State Route 268

TRAFFIC: Existing: 2100. ADT (2009) Design: 3100 ADT (2029)

( ) PROGRAMMING PROCESS (x) CONCEPT DEVEL. ( ) DURING PROJ DEVEL.

PROJECT COSTS

16-May-02 ON-SITE DETOUR ALTERNATE

DETAILED COST ESTIMATE FOR SR 268 OVER ROSES CREEK
PROJECT NO.: BRST-0590(7)
P.I. NO.: 442971

ITEM NO.	ITEM	UNIT	UNIT COST	QUANT	TOTAL
	ROADWAY				
210-0100	GRADING COMPLETE -	LS	$62,666.67	1	$62,666.67
318-3000	AGGR SURF CRS	TN	$19.18	10	$191.80
402-3142	RECYCLED ASPH CONC 19 MM SUPERPAVE, GP 1 OR 2, INCL	TN	$53.63	503	$26,995.73
402-3121	RECYCLED ASPH CONC 25 MM SUPERPAVE, GP 1 OR 2, INCL BITUM	TN	$34.80	1258	$43,793.19
402-3140	RECYCLED ASPH CONC 9.5 MM SUPERPAVE, GP 1 OR 2, INCL	TN	$35.66	360	$12,823.56
402-1812	RECYCLED ASPH CONC LEVELING, INCL BITUM MATL & H LIME	TN	$35.62	50	$1,781.00
413-1000	BITUM TACK COAT	GL	$0.89	461	$409.93
433-1000	REINF CONC APPROACH SLAB	SY	$115.12	267	$30,737.04
441-0301	CONC SPILLWAY, TP 1	EA	$1,345.24	4	$5,380.96
550-1180	STORM DRAIN PIPE, 18 IN, H 1-10	LF	$31.58	50	$1,579.00
576-1015	SLOPE DRAIN PIPE, 15 IN	LF	$23.33	80	$1,866.40
577-1100	METAL DRAIN INLET - COMPLETE ASSEMBLY	EA	$956.06	4	$3,824.24
641-1100	GUARDRAIL, TP T	LF	$61.68	83	$5,093.53
641-1200	GUARDRAIL, TP W	LF	$9.87	388	$3,824.63
641-5001	GUARDRAIL ANCHORAGE, TP 1	EA	$483.87	2	$967.74
641-5012	GUARDRAIL ANCHORAGE, TP 12	EA	$1,331.30	2	$2,662.60
				SUBTOTAL	$204,598.02
	EROSION CONTROL				
000-0000	EROSION CONTROL	LS	$85,000.00	1	$85,000.00
				SUBTOTAL	$85,000.00
	BRIDGE				
540-1102	REMOVAL OF EXISTING BR, BR NO -	LS	$30,000.00	1	$30,000.00
543-1001	CONSTRUCTION OF BRIDGE NO. ($50/SF X 3893 SF)	LS	$194,625.00	1	$194,625.00
603-2024	STN DUMPED RIP RAP, TP 1, 24 IN	SY	$35.67	160	$5,707.20
				SUBTOTAL	$230,332.20
	TRAFFIC CONTROL - ON SITE DETOUR				
150-1000	TRAFFIC CONTROL -	LS	$80,000.00	1	$80,000.00
150-5000	TRAFFIC CONTROL, TEMPORARY SAND LOADED ATTENUATOR MODULE	EA	$471.31	20	$9,426.20
622-1033	PRECAST CONCRETE MEDIAN BARRIER, METHOD 3	LF	$35.42	500	$17,710.00
				SUBTOTAL	$89,426.20
	TEMPORARY DETOUR ROAD & STRUCTURE				
210-0100	GRADING COMPLETE -	LS	$41,777.78	1	$41,777.78
402-3140	RECYCLED ASPH CONC 9.5 MM SUPERPAVE, GP 1 OR 2, INCL	TN	$35.66	210	$7,479.24
402-3142	RECYCLED ASPH CONC 19 MM SUPERPAVE, GP 1 OR 2, INCL	TN	$53.63	839	$44,992.89
	TEMPORARY DETOUR STRUCTURE		$400.00	60	$24,000.00
				SUBTOTAL	$118,249.91
				CONSTRUCTION COST	**$727,606.33**

CONSTRUCTION:	**$727,606.33**	**RIGHT OF WAY:**	**$20,000.00**
E & C (10%):	**$72,760.63**	**ACQUIRED BY:**	**DOT**
INFLATION: (2 yrs. @ 5% per yr)	**$74,579.65**	**UTILITIES:**	**$15,000.00**
TOTAL CONS'T COSTS	**$874,946.61**		

STATE	PROJECT NUMBER	SHEET NO.	TOTAL SHEETS
GA	BRST-0590(7)		

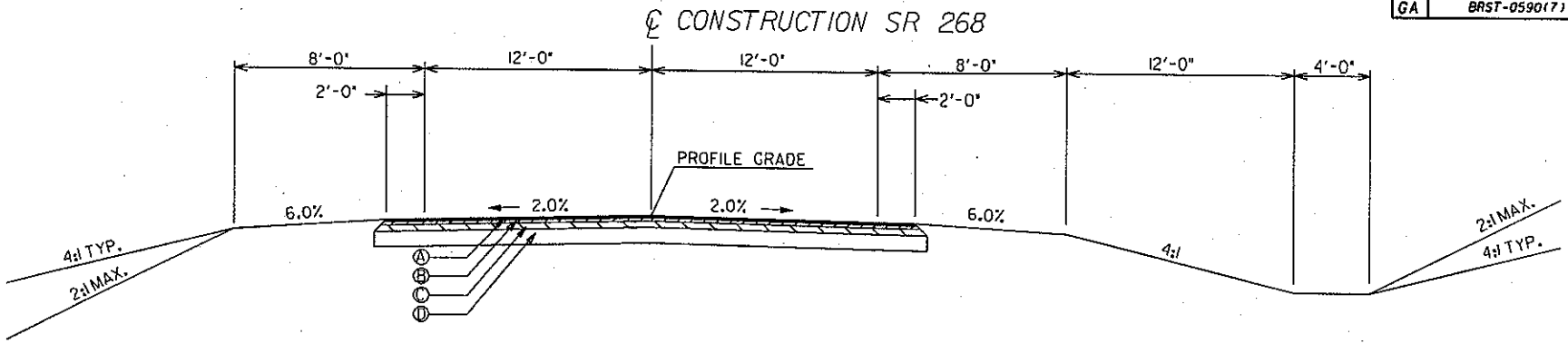

TYPICAL SECTION #1

NORMAL SECTION

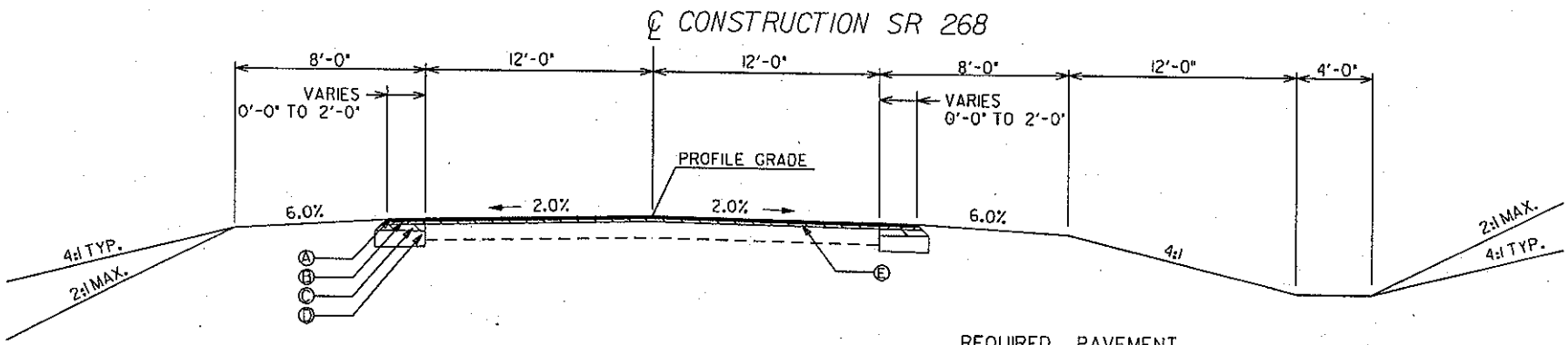

TYPICAL SECTION #2

OVERLAY SECTIONS

REQUIRED PAVEMENT

- (A) RECYCLED ASPH CONC 9.5 mm SUPERPAVE, GP 2 ONLY, INCL BITUM & H LIME (138 LBS/SY)
- (B) RECYCLED ASPH CONC 19 mm SUPERPAVE, GP 1 OR 2, INCL BITUM MATL & H LIME (220 LBS/SY)
- (C) RECYCLED ASPH CONC 25 mm SUPERPAVE, GP 1 OR 2, INCL BITUM MATL & H LIME (330 LBS/SY)
- (D) GR AGGR BASE CRS, 6 INCH, INCL MATL
- (E) RECYCLED ASPH CONC LEVELING, INCL BITUM MATL & H LIME, AS REQD

Heath & Lineback Engineers
INCORPORATED
12 POWDER SPRINGS STREET, SUITE 240
MARIETTA, GEORGIA 30064

DATE	REVISIONS	DATE	REVISIONS

GEORGIA
DEPARTMENT OF TRANSPORTATION
TYPICAL SECTIONS

PROJECT: BRST-0590(7)
COUNTY: COFFEE
DATE: MARCH 2002

NEED AND PURPOSE

PROJECT BRST-0590(7), COFFEE COUNTY
P.I. NO 442971
Bridge Replacement
SR 268 Bridge over Rose Creek

The bridge over Rose Creek will be replaced under project BRST-0590(7). This bridge is located on SR 268 approximately 1.1 mile west of the City of Broxton. The current sufficiency rating is 48.25 and the design live load is H 15.

State Route 268 in the area at the bridge has a speed limit of 55 mph with a current traffic volume of 1600 AADT. The AADT is expected to reach 2100 by 2009 with projected traffic for the year 2029 to reach 3100. Truck traffic is estimated at 10%. These traffic volumes include school bus traffic. This section of SR 268 is not currently a part of the Statewide Bicycle and Pedestrian Plan. There is a similar bridge replacement proposed on SR 268 over Halls Creek, approximately one mile from the Roses Creek site. Land use along this section of roadway is primarily agricultural.

This project is located in Census Block 9901-002. According to the 1990 Census, Block 9901-002 consists of 37% minority with 22% of the total residents living below the poverty level. In comparison, the overall average minority population in Coffee County is at 25%. Twenty three percent of all residents in Coffee County are classified as living below the poverty level.

According to MOG 2405-1, this bridge meets the criteria for replacement. This MOG requires the replacement of bridges with a design live load of H 15.

Department of Transportation
State of Georgia

INTERDEPARTMENT CORRESPONDENCE

FILE BRST-0590(7) Coffee
P.I. 442971

OFFICE Environment/ Location

DATE January 17, 2002

FROM Harvey D. Keepler, State Environmental/ Location Engineer

TO James B. Buchan, P.E., State Consultant Design Engineer
Attn: Ted Cashin

SUBJECT SR 268/Ambrose-Broxton Rd. @ Rose Creek

We are furnishing estimated traffic assignments for the above project as follows:

Existing 2000 ADT = 1600
2009 ADT = 2100
2029 ADT = 3100
K = 10%
D = 60%
T = 8%
24 HR T = 10%
SU = 5%
COMB = 5%

If you have any questions concerning this information please contact Teresa Williamson at (404)699-4458

HDK:TJW

FLEXIBLE PAVEMENT DESIGN ANALYSIS

Project: BRST-0590(7) **County:** Coffee
P.I. no.: 442971
Description: Temporary Pavement for SR 268/Ambrose-Broxton Rd over Roses Cr

Traffic Data (NOTE: AADTs are one-way)

24-hour Truck Percentage: 10.00%
AADT initial year of design period: 1,050 vpd (2009)
AADT final year of design period: 1,550 vpd (2029)
Mean AADT (one-way): 1,300 vpd

Design Loading

Mean AADT		LDF		Trucks		18-K ESAL		Total Daily Loads
1,300	*	1.00	*	0.100	*	0.62	=	82

Total predicted design period loading = 82 * 20 * 365 = 598,600

Design Data

Terminal Serviceability Index: 2.50
Soil Support: 4.00
Regional Factor: 1.40

PROPOSED FLEXIBLE PAVEMENT STRUCTURE

Material	Thickness mm	(in.)	Structural Coefficient	Structural Value
9.5 mm Superpave	32	(1.25)	0.0173	0.55
19 mm Superpave	82	(3.24)	0.0173	1.42
	45	(1.76)	0.0118	0.53

Required SN = 3.34 Proposed SN = 2.50

>>> Proposed pavement is 25.1% Underdesign <<<

Remarks: Heath & Lineback Engineers, Inc.

Prepared by Randy Boykin May 14, 2002
Date

Recommended _____
State Materials & Research Engineer **Date**

Approved _____
State Consultant Design Engineer **Date**

BRIDGE INVENTORY DATA LISTING GEORGIA DEPARTMENT OF TRANSPORTATION

Structure ID: 069-0054-0 | **Coffee** | SUFF. RATING 48.25

Location & Geography

*	Structure I.D.No:	069-0054-0	
200	Bridge Information	07	
* 6A	Feature Int:	ROSES CREEK	
* 6B	Critical Bridge:	0	
* 7A	Route Number Carried:	SR00268	
* 7B	Facility Carried:	AMBROSE-BROXTON RD	
* 9	Location:	APP 1.1 MI W OF BROXTON	
2	DOT District:	4	
207	Year Photo:	1998	
* 91	Inspection Frequency:	24	Date: 11/05/2001
92A	Fract Crit Insp Freq:	00	Date: 02/01/1901
92B	Underwater Insp Freq:	00	Date: 02/01/1901
92C	Other Spc. Insp Freq:	00	Date: 02/01/1901
* 4	Place Code:	00000	
* 5	Inventory Route (O/U):	1	
	Type:	3	
	Designation:	1	
	Number:	00268	
	Direction:	0	
* 16	Latitude: 31-37.4	MMS Prefix: SR	
* 17	Longitud 82-54.8	MMS Suffix: 00	MP: 8.53
98	Border Bridge:	000	%Shared: 00
99	ID Number:	000000000000000	
* 100	STRAHNET:	0	
12	Base Highway Network:	1	
13A	LRS Inventory Route:	691026800	
13B	Sub Inventory Route:	0	
* 101	Parallel Structure:	N	
* 102	Direction of Traffic:	2	
* 264	Road Inventory Mile Post:	008.48	
* 208	Inspection Area:	04	Initials: BCN
	Engineer's Initial:	wmd	

* Location I.D. No.: 069-00268D-008.53E

* 104	Highway System:	0	
* 26	Functional Classification:	07	
* 204	Federal Route Type:	S	No.: 00590
105	Federal Lands Highway:		
* 110	Truck Route:	0	
206	School Bus Route:	1	
217	Benchmark Elevation:	0233.00	
218	Datum:	1	
* 19	Bypass Length:	07	
* 20	Toll:	3	
* 21	Maintenance:	01	
* 22	Owner:	01	
* 31	Design Load:	2	
37	Historical Significance:	5	
205	Congressional District:	08	
27	Year Constructed:	1959	
106	Year Reconstructed:	0000	
33	Bridge Median:	0	
34	Skew:	00	
35	Structred Flared:	0	
38	Navigation Control:	0	
213	Special Steel Design:	0	
267	Type of Paint:	1	
* 42	Type of Service on:	1	
		5	
214	Movable Bridge:	0	
203	Type Bridge:	E-N-O-O	
259	Pile Encasement:	1	
* 43	Structure Type Main:	1 04	
45	No. Spans Main:	003	
44	Structure Type Appr:	0 00	
46	No. Spans Appr:	0000	
226	Bridge Curve Horz:	0	Vert: 0
111	Pier Protection:	0	
107	Deck Structure Type:	1	
108	Wearing Surface Type:	1	
	M	0	
	F	0	

Signs & Attachments

225	Expansion Joint Type:	02	
242	Deck Drains:	1	
243	Parapet Location:	0	
	Height:		0.00
	Width:		0.00
238	Curb:		1.20 1
239	Handrail:	1 1	
* 240	Median Barrier Rail:	0	
241	Bridge Median Height:		0.00
	Width:		0.00
* 230	Guardrail Loc Dir Rear:	3	
	Fwrd:	3	
	Oppo Dir Rear:	0	
	Fwrd:	0	
244	Approach Slab:	3	
224	Retaining Wall:	0	
233	Posted Speed Limit:	55	
236	Warning Sign:	1	
234	Delineator:	1	
235	Hazard Boards:	1	
237	Utilities Gas:	00	
	W	00	
	Ele	00	
	Telephone:	00	
	S	00	
247	Lighting Street:	0	
	Naviagtion:	0	
	Aerial:	0	
* 248	County Continuity No.:	00	

BRIDGE INVENTORY DATA LISTING GEORGIA DEPARTMENT OF TRANSPORTATION

Structure ID: 069-0054-0 **Coffee** SUFF. RATING 48.25

Programming Data

201 Project No.: S-0590 (1)
202 Plans Available: 1
249 Prop. Proj. No. BRST-0590 (7)
250 Approval Status: 0000
251 P.I. No.: 442971-
252 Contract Date: 02/01/2006
260 Seismic No.: 00000
75 Type Work: 34 1
94 Bridge Imp. Cost $ 63
95 Roadway Imp. Cos $ 41
96 Total Imp Cost: $ 142
76 Imp. Length: 000295
97 Imp. Year: 1990
114 Future ADT: 1800 Year: 2020

Hydraulic Data

215 Waterway Data
Highwater Elev.: 0230.1 Year: 1973
Avg. Streambed Elev.: 0000.0 Freq.: 00
Drainage Area: 00000
Area Of Opening: 000476
113 Scour Critical: 6
216 Water Depth: 00.9 Br. Height: 10.5
222 Slope Protection: 1
221 Spur Dikes Rear: 0 Fwrd: 0
219 Fender System: 0
220 Dolphin: 0
223 Culvert Cover: 000
Type: 0
No. Barrels: 0
Width: 0.00 Height: 0.00
Length: 0 Apron: 0
* 265 U/W Insp. Area: 0 Diver: ZZZ

* Location I.D. No.: 069-00268D-008.53E

Measurements

* 29 ADT: 001200 Year: 2000
109 % Trucks: 10
* 28 Lanes On: 02 Under: 00
210 No. Tracks On: 00 Under: 00
* 48 Max. Span Length: 0028
* 49 Structure Length: 84
51 Br. Rwdy. Width: 26.30
52 Deck Width: 32.30
* 47 Tot. Horz. Cl: 26.30
50 Curb/Sdewlk Width: 2.00/2.00
32 Approach Rdwy Width: 024
* 229 Shoulder Width:
Rear Lt: 2.00 Type: 2 Rt: 2.00
Fwrd Lt: 2.00 Type: 2 Rt: 2.00
Pavement Width:
Rear: 20.00 Type: 2
Fwrd: 20.00 Type: 2
Intersection Rear: 0 Fwrd: 0
36 Safety Features Br. Rail: 2
Transition: 2
App. G. Rail: 2
App. Rail End: 2
53 Minimum Cl.Over: 99 ' 99 "
Under: N 00 ' 00 "
* 228 Min. Vertical Cl
Act. Odm Dir: 99 ' 99 "
Oppo. Dir: 99 ' 99 "
Posted Odm. Dir: 00 ' 00 "
Oppo. Dir: 00 ' 00 "
55 Lateral Undercl. Rt: N 99.90
56 Lateral Undercl. Lt: 0.00
* 10 Max Min Vert Cl: 99 ' 99 " Dir: 0
39 Nav Vert Cl: 000 Horz: 0000
116 Nav Vert Cl Closed: 000
245 Deck Thickness Main: 6.00
Deck Thick Approach: 0.00
246 Overlay Thickness: 0.00
212 Year Last Painted: Sup: 0000 Sub: 1982

Ratings

65 Inventory Rating Method: 1
63 Inventory Rating Method: 1
66 Inventory Type: 2 Rating: 13
64 Operating Type: 2 Rating: 29
231 Calculated Loads
H-Modified: 15 1
HS-Modified: 25 0
Type 3: 27 1
Type 3s2: 40 0
Timber: 34 1
Piggyback: 40 0
261 H Inventory Rating: 10
262 H Operating Rating: 15
67 Structural Evaluation: 2
58 Deck Condition: 6
59 Superstructure Condition: 7
* 227 Collision Damage: 0
60A Substructure Condition: 6
60B Scour Condition: 6
60C Underwater Condition: N
71 Waterway Adequacy: 6
61 Channel Protection Cond: 7
68 Deck Geometry: 4
69 UnderClr. Horz/Vert: N
72 Appr. Alignment: 7
62 Culvert: N

Posting Data

70 Bridge Posting Required: 3
41 Struct Open, Posted, Cl: P
* 103 Temporary Structure: T
232 Posted Loads H-Modified: 15
HS-Modified: 00
Type 3: 27
Type3s2: 00
Timber: 34
Piggyback: 00
253 Notification Date 02/01/1901
253 Fed Notify Date: 02/01/1901 2

NOTICE OF LOCATION AND DESIGN APPROVAL

Project No. BRST-0590 (7)
P.I. No. 442971

Notice is hereby given in compliance with Georgia code 22-2-109 that the Georgia Department of Transportation has approved the Location and Design of the above project.

This project consists of improvements of S.R. 268 Ambrose/Broxton Road over Roses Creek, located in Coffee County, G.M.D. 1127. The improvement project includes replacing the existing bridge over Halls Creek.

Date of Location Approval: July 15, 2002

Drawings and/or maps, and/or plats of the proposed project as approved are on file and are available for inspection at the Georgia Department of Transportation.

Joe Sheffield
Email: joe .sheffield@dot.state.ga.us
710 West Second Street
Tifton, GA 31794
229-386-3033

Any interested party may obtain a copy of the drawings or maps or plats or portions thereof by paying a nominal fee and requesting in writing to:

Ted Cashin
Office of Consultant Design
Email: ted.cashin@dot.state.ga.us
Georgia Department of Transportation
No. 2 Capitol Square
Atlanta, Georgia 30334
404-463-6135

Any written request or communication in reference to this project or notice SHOULD include the PROJECT and P.I. NUMBERS as noted at the top of this notice.

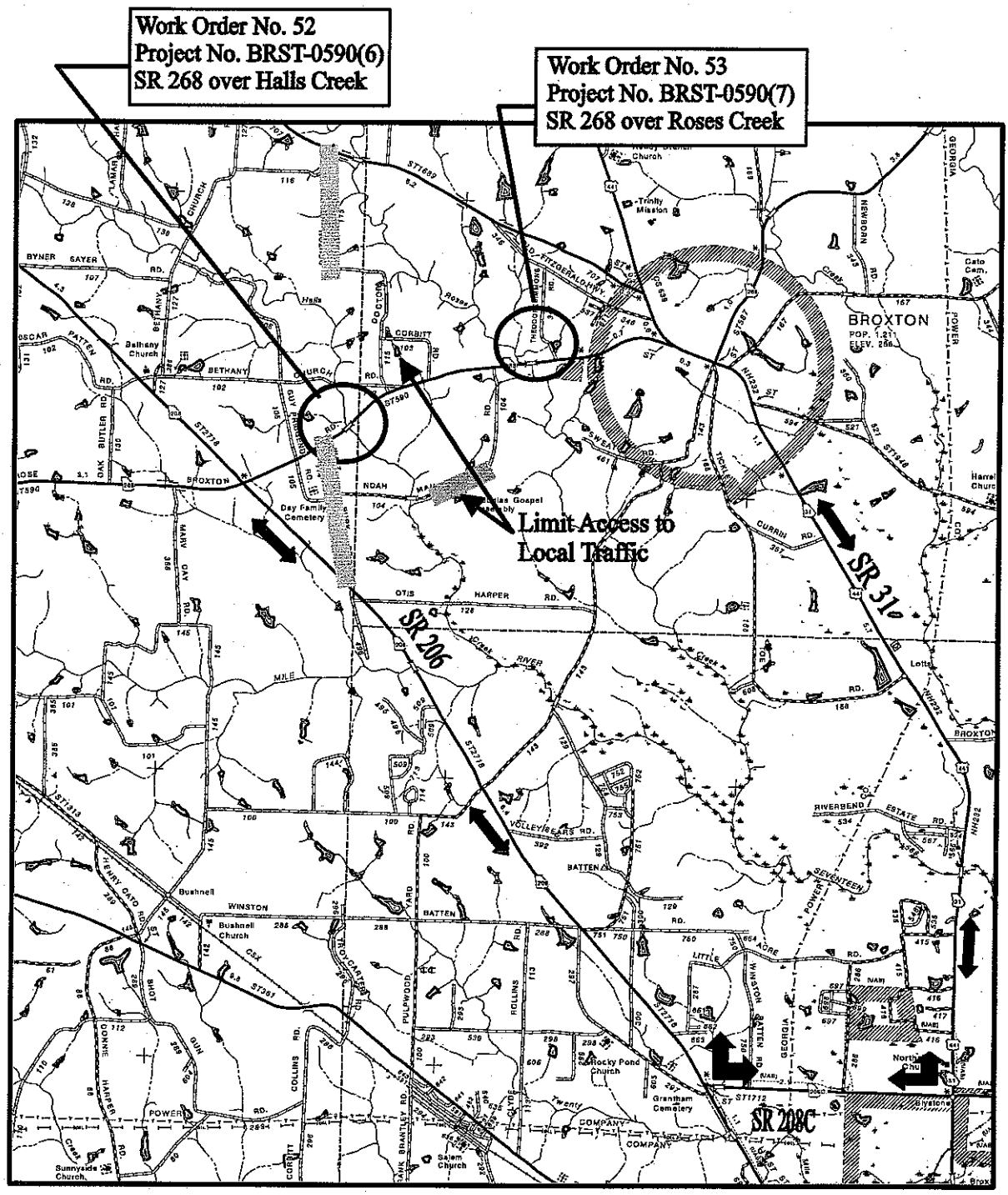

Work Order No. 53
Recommended Detour Route – 15.3 miles – 4 miles = 11.3 miles net
SR 268/Ambrose-Broxton Road over Roses Creek
Project No.: BRST-0590(7), Coffee County
P.I. No.: 442971

DEPARTMENT OF TRANSPORTATION
STATE OF GEORGIA

Office of Consultant Design

PROJECT CONCEPT REPORT

Project Number: BRST-0590 (7)
County: Coffee
P. I. Number: 442971

Federal Route Number: N/A
State Route Number: 268

DESCRIPTION: SR 268/Ambrose-Broxton Rd over Roses Creek
Recommendation for approval:

DATE 6-14-02 _____
Project Manager

DATE 6-14-02 _____
State Consultant Design Engineer

The concept as presented herein and submitted for approval is consistent with that which is included in the Regional Transportation Plan (RTP) and/or the State Transportation Improvement Program (STIP).

DATE_____ _____
State Transportation Planning Administrator

DATE_____ _____
State Office of Financial Management Administrator

DATE_____ _____
State Environmental/Location Engineer

DATE_____ _____
State Traffic Safety and Design Engineer

DATE_____ _____
District 4 Engineer

DATE 6-28-02 _____
State Project Review Engineer

DATE_____ _____
State Bridge and Structural Design Engineer

SCORING RESULTS AS PER MOG 2440-2

Project Number:	County:	PI No.:
BRST-0590(7)	Coffee	442971

Report Date:	Concept By:
June 11, 2002	DOT Office: Office of Consultant Design
☒ Concept Stage	Consultant: Heath & Lineback Engineers

Project Type: Choose One From Each Column			
	☐ Major	☐ Urban	☐ ATMS
	☒ Minor	☒ Rural	☒ Bridge Replacement
			☐ Building
			☐ Interchange Reconstruction
			☐ Intersection Improvement
			☐ Interstate
			☐ New Location
			☐ Widening & Reconstruction
			☐ Miscellaneous

FOCUS AREAS	SCORE	RESULTS
Presentation	100	
Judgement	100	
Environmental	100	
Right of Way	100	
Utility	100	
Constructability	100	
Schedule	100	

DEPARTMENT OF TRANSPORTATION
STATE OF GEORGIA
Office of Consultant Design

PROJECT CONCEPT REPORT

Project Number: BRST-0590 (7)
County: Coffee
P. I. Number: 442971

Federal Route Number: N/A
State Route Number: 268

DESCRIPTION: SR 268/Ambrose-Broxton Rd over Roses Creek
Recommendation for approval:

DATE 6-14-02 _____
Project Manager

DATE 6-14-02 _____ James B. Barker MBA
State Consultant Design Engineer

The concept as presented herein and submitted for approval is consistent with that which is included in the Regional Transportation Plan (RTP) and/or the State Transportation Improvement Program (STIP).

DATE 6-21-02 _____
State Transportation Planning Administrator

DATE_____ _____
State Office of Financial Management Administrator

DATE_____ _____
State Environmental/Location Engineer

DATE_____ _____
State Traffic Safety and Design Engineer

DATE_____ _____
District 4 Engineer

DATE_____ _____
State Project Review Engineer

DATE_____ _____
State Bridge and Structural Design Engineer

DEPARTMENT OF TRANSPORTATION
STATE OF GEORGIA

Office of Consultant Design

PROJECT CONCEPT REPORT

Project Number: BRST-0590 (7)
County: Coffee
P. I. Number: 442971

Federal Route Number: N/A
State Route Number: 268

DESCRIPTION: SR 268/Ambrose-Broxton Rd over Roses Creek
Recommendation for approval:

DATE 6-14-02 _____
Project Manager

DATE 6-14-02 _____
State Consultant Design Engineer

The concept as presented herein and submitted for approval is consistent with that which is included in the Regional Transportation Plan (RTP) and/or the State Transportation Improvement Program (STIP).

DATE_____ _____
State Transportation Planning Administrator

DATE_____ _____
State Office of Financial Management Administrator

DATE 6/21/02 _____
State Environmental/Location Engineer

DATE_____ _____
State Traffic Safety and Design Engineer

DATE_____ _____
District 4 Engineer

DATE_____ _____
State Project Review Engineer

DATE_____ _____
State Bridge and Structural Design Engineer

DEPARTMENT OF TRANSPORTATION
STATE OF GEORGIA

Office of Consultant Design

PROJECT CONCEPT REPORT

Project Number: BRST-0590 (7)
County: Coffee
P. I. Number: 442971

Federal Route Number: N/A
State Route Number: 268

DESCRIPTION: SR 268/Ambrose-Broxton Rd over Roses Creek
Recommendation for approval:

DATE 6-14-02 _____
Project Manager

DATE 6-14-02 _____
State Consultant Design Engineer

The concept as presented herein and submitted for approval is consistent with that which is included in the Regional Transportation Plan (RTP) and/or the State Transportation Improvement Program (STIP).

DATE_____ _____
State Transportation Planning Administrator

DATE 6-19-02 _____
State Office of Financial Management Administrator

DATE_____ _____
State Environmental/Location Engineer

DATE_____ _____
State Traffic Safety and Design Engineer

DATE_____ _____
District 4 Engineer

DATE_____ _____
State Project Review Engineer

DATE_____ _____
State Bridge and Structural Design Engineer

DEPARTMENT OF TRANSPORTATION
STATE OF GEORGIA

Office of Consultant Design

PROJECT CONCEPT REPORT

Project Number: BRST-0590 (7)
County: Coffee
P. I. Number: 442971

Federal Route Number: N/A
State Route Number: 268

DESCRIPTION: SR 268/Ambrose-Broxton Rd over Roses Creek
Recommendation for approval:

DATE 6-14-02 _____
Project Manager

DATE 6-14-02 _____
State Consultant Design Engineer

The concept as presented herein and submitted for approval is consistent with that which is included in the Regional Transportation Plan (RTP) and/or the State Transportation Improvement Program (STIP).

DATE_____ _____
State Transportation Planning Administrator

DATE_____ _____
State Office of Financial Management Administrator

DATE_____ _____
State Environmental/Location Engineer

DATE_____ _____
State Traffic Safety and Design Engineer

DATE_____ _____
District 4 Engineer

DATE_____ _____
State Project Review Engineer

DATE 7/7/02 _____
State Bridge and Structural Design Engineer