ORIGINAL TO GENERAL FILES

D.O.T. 66

DEPARTMENT OF TRANSPORTATION
STATE OF GEORGIA

INTERDEPARTMENT CORRESPONDENCE

FILE NH-006-2(57) Dougherty County
P.I. No. 422570

OFFICE Preconstruction

DATE June 28, 2001

FROM C. Wayne Hutto, Assistant Director of Preconstruction

TO SEE DISTRIBUTION

SUBJECT PROJECT CONCEPT REPORT APPROVAL

Attached for your files is the approval for subject project.

CWH/cj

Attachment

DISTRIBUTION:

Tom Turner
David Mulling
Harvey Keepler
Jerry Hobbs
Herman Griffin
Michael Henry
Marion Waters
Marta Rosen
Paul Liles
Jimmy Chambers
David Crim
Joe Palladi
BOARD MEMBER

D.O.T. 66

DEPARTMENT OF TRANSPORTATION
STATE OF GEORGIA

INTERDEPARTMENT CORRESPONDENCE

FILE NH-006-2(57) Dougherty County
P.I. No. 422570

OFFICE Preconstruction

DATE June 21, 2001

FROM C. Wayne Hutto, P.E., Assistant Director of Preconstruction

TO Frank L. Danchetz, P.E., Chief Engineer

SUBJECT PROJECT CONCEPT REPORT

This project is the reconstruction of the cloverleaf interchange at Liberty Expressway/Moultrie Road in Albany, Georgia. The cloverleaf interchange form does not function well under moderate to heavy traffic volumes because of built-in weaving sections between the loop ramps. In this case, there were 8 accidents southbound and 14 accidents northbound related to the weaving sections on the freeway from 1995 to 1997. The proposed design should eliminate these weaving sections and this type of accident in the future. Traffic estimates are as follows:

	2005 ADT	2025 ADT
Moultrie Road	21,620	31,620
EB to NB Loop Ramp	3,670	5,460
SB to EB Loop Ramp	2,960	4,030

The proposed construction converts the existing cloverleaf interchange of SR 3/Liberty Expressway with SR 133/Moultrie Road to a "Parclo A" interchange. The northwest and southwest loop ramps will be removed, while adding a left turn lane to the southbound and northbound exit ramps, and median openings and signals on Moultrie Road at the two new ramp terminals. The northbound and eastbound exit ramps will be shifted to the west to increase the weaving distance between the interchange and a truck terminal just east of the interchange. These improvements will include interconnected signals installed at the ramps. Traffic will be maintained during construction.

Environmental concerns include requiring a COE 404 permit; a Categorical Exclusion be prepared; a public information meeting will be held; time saving procedures are not appropriate.

NH-006-2(57) Dougherty
June 21, 2001

The estimated costs for this project are:

	PROPOSED	APPROVED	PROG DATE	LET DATE
Construction (includes E&C and inflation)	$4,524,000	$650,000	2002	02-07
Right-of-Way	-0-	$150,000		
Utilities*	LGPA	LGPA		

*Dougherty County signed LGPA for utilities 11-1-99; City of Albany signed LGPA for utilities 3-28-01.

This project is in the STIP. I recommend this project concept be approved.

CWH:JDQ/cj

Attachment

CONCUR _____
Thomas L. Turner, P.E., Director of Preconstruction

APPROVE _____
Frank L. Danchetz, P.E., Chief Engineer

DEPARTMENT OF TRANSPORTATION
STATE OF GEORGIA

INTERDEPARTMENTAL CORRESPONDENCE

FILE: NH-006-2(57) Dougherty
P.I. Number 422570-

OFFICE: Engineering Services

DATE: June 13, 2001

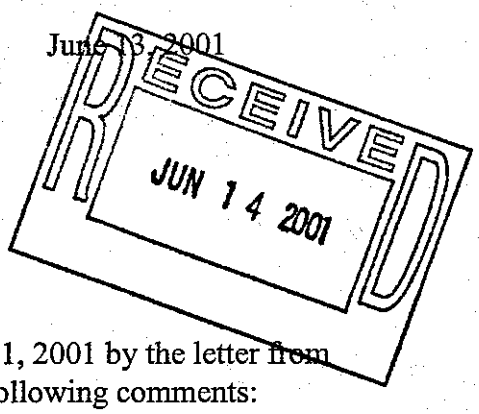

FROM: David Mulling, Project Review Engineer

TO: Wayne Hutto, Assistant Director of Pre-construction

SUBJECT: **CONCEPT REPORT**

We have reviewed the concept report submitted June 1, 2001 by the letter from Joseph P. Palladi dated May 16, 2001, and have the following comments:

1. Moultrie Road traffic should be presented as the total for both directions of travel. Average Daily Traffic (ADT) is usually presented in this manner.
2. Traffic for Moultrie Road is not consistent throughout the report. Page 2 shows year 2025 traffic as 15,810 vpd, the Need and Purpose Statement shows year 2025 traffic as 27,800 vpd, and the cost estimate shows year 2025 vpd as 21,930 vpd.
3. Some accident information is presented on Page 3,and some is presented in the Need and Purpose Statement. The presentation is difficult to follow. Also, the collision diagram referenced on Page 3 was not included in the report.

The costs for the project are:

Construction	$3,917,000
Inflation	$ 196,000
E&C	$ 411,000
Reimbursable Utilities	$ 385,000
Right of Way	$ 0

DTM

c: Joe Palladi

DEPARTMENT OF TRANSPORTATION
STATE OF GEORGIA

INTERDEPARTMENT CORRESPONDENCE

FILE NH-006-2(57) Dougherty County
SR 133 / Moultrie Road Interchange
P.I. No. 422570

OFFICE Atlanta, Georgia

DATE May 16, 2001

FROM Joseph P. Palladi, P.E., State Urban Design Engineer

TO Thomas L. Turner, Director of Preconstruction
Attn.: Wayne Hutto

SUBJECT **Proposed Project Concept Report**

Attached for your further handling is the Project Concept Report for the SR 133 / Moultrie Road Interchange in Dougherty County.

Please process this report through the Department's project development process.

JPP:AVS
Attachment

cc: Herman Griffin, w/ attachment
Harvey Keepler, w/ attachment
Marion Waters, w/ attachment
Paul Liles, w/ attachment
David Mulling, w/ attachment
David Crim, District 4 Engineer

RECEIVED
MAY 31 2001
BRIDGE DESIGN
DEPT. OF TRANSPORTATION

PROJECT CONCEPT REPORT

Liberty Expressway at Moultrie Road Interchange

DATE: May 21, 2001

PROJECT NUMBER: NH-006-2(57) **COUNTY:** Dougherty

DESCRIPTION: This project converts the existing cloverleaf interchange of SR 3/Liberty Expressway with SR 133/Moultrie Road to a Parclo A interchange. The northeast and southwest loop ramps are removed, while adding a left-turn lane to the southbound and northbound exit ramps, and median openings and signals on Moultrie Road at the two new ramp terminals. The northbound to eastbound exit ramp is shifted to the west to increase the weaving distance between the interchange and a truck terminal just east of the interchange. Widening both sides of the Moultrie Road bridge over Liberty Expressway lengthens the deceleration lanes and separates them from through lanes with a concrete barrier to improve safety. All proposed improvements are accomplished within existing right-of-way.

LENGTH: 1.56 miles

P.I. NO.: 422570 **U.S. ROUTE NO.:** N/A **STATE RT. NO.:** 3

LOCATION: SR 3 / Liberty Expressway at the Moultrie Road Interchange

TRAFFIC

	2005 ADT	2025 ADT
Moultrie Road:	~~40,810~~ 21,620	~~45,810~~ 31,620
EB to NB Loop Ramp	3,670	5,460
SB to EB Loop Ramp	2,960	4,030

Ideal 22-June-20

PDP CLASSIFICATION

Major

FUNCTIONAL CLASSIFICATION

Liberty Expressway: Urban Principal Arterial
Moultrie Road: Urban Principal Arterial

FULL OVERSIGHT ( ) **EXEMPT (X)** **N/A ( )**

EXISTING DESIGN

TYPICAL SECTION: Four-lane divided highway with two 12-foot lanes in each direction and a 40-foot depressed grass median.

	POSTED SPEED	MIN. EXISTING RADIUS OF CURVE	MAX.EXISTING GRADE
Loop Ramps:	25 m.p.h.	150'	3.125%
Other Ramps:	45 m.p.h.	643'	0.4666%
Moultrie Road:	45 m.p.h.	N/A	N/A

EXISTING MAJOR STRUCTURES

FEATURES INTERSECTED: Moultrie Road twin bridges over Liberty Expressway
Culvert carrying Marine Corps Canal under Moultrie Road

SR 133/MOULTRIE ROAD EASTBOUND BRIDGE:
SUFFICIENCY RATING: 70.4 **LENGTH:** 290' **WIDTH:** 40'

SR 133/MOULTRIE ROAD WESTBOUND BRIDGE:
SUFFICIENCY RATING: 70.4 **LENGTH:** 290' **WIDTH:** 40'

SCORING RESULTS AS PER MOG 2440-2

Project Number:	County:	PI No.:
NH-006-2(57)	Dougherty	422570-

Report Date:	Concept By:
5/16/01	DOT Office: URBAN DESIGN
☒ CONCEPT	DOT Project Manager: DARRELL RICHARDSON
	Consultant: GREENHORN & O'MARA

Project Type: Choose One From Each Column			
	☒ Major	☒ Urban	☐ ATMS
	☐ Minor	☐ Rural	☐ Bridge
			☐ Building
			☒ Interchange
			☐ Intersection Improvement
			☐ Interstate
			☐ New Location
			☐ Widening & Reconstruction
			☐ Miscellaneous

FOCUS AREAS	SCORE	RESULTS
Presentation	90%	Traffic information not consistent. Accident information difficult to follow.
Judgement	100%	
Environmental	100%	
Right of Way	100%	
Utility	100%	
Constructability	100%	
Schedule	100%	

DEPARTMENT OF TRANSPORTATION
STATE OF GEORGIA

OFFICE OF URBAN DESIGN
PROJECT CONCEPT REPORT SIGN-OFF FORM

SR 3/Liberty Expressway at
Clark Avenue Interchange

NH-006-2(56)
Dougherty County
P.I. No. 422560

U.S. Route Number: N/A
State Route Number: 3

Date of Report: May 21, 2001
Project Manager: Darrell Richardson

(See attached location map)

RECOMMENDATION FOR APPROVAL:

5/23/01 — DATE — STATE URBAN DESIGN ENGINEEER

DATE — STATE TRANSPORTATION PROGRAMMING ENGINEER

DATE — STATE ENVIRONMENTAL / LOCATION ENGINEER

DATE — STATE TRAFFIC OPERATIONS ENGINEER

DATE — DISTRICT ENGINEER

DATE — PROJECT REVIEW ENGINEER

5/31/01 — DATE — BRIDGE DESIGN ENGINEER

This project concept is contained in the Regional Transportation Improvement Program (RTIP) and/or in the State Transportation Improvement Program (STIP). The concept as presented herein and submitted for approval is consistent with that which is included in the RTIP and/or the STIP.

DATE — STATE TRANSPORTATION PLANNING ADMINISTRATOR

COORDINATION AND SCHEDULING

CONCEPT TEAM MEETING DATE: March 19, 2001

CONFORMS TO TIP / STIP? Yes

MEETS LOGICAL TERMINI REQUIREMENTS? Yes

P.A.R. MEETING: N/A

LEVEL OF ENVIRONMENTAL ANALYSIS: Categorical Exclusion

PUBLIC INVOLVEMENT: Public Information Meeting

PERMITS REQUIRED (COE 404, WATER QUALITY, TVA): COE Nationwide Permit 23; Georgia GAR 100000 (NPDES Construction General Permit)

TIME SAVINGS PROCEDURE APPROPRIATE: No

SCHEDULING CONSIDERATIONS:

TIME TO COMPLETE ENVIRONMENTAL: (MONTHS) X 6

TIME TO COMPLETE PRELIMINARY RD/RW PLANS: (MONTHS) 8

TIME TO COMPLETE NATIONWIDE PERMIT 23: (MONTHS) 3

TIME TO COMPLETE FINAL CONSTRUCTION PLANS: (MONTHS) 6

TIME TO COMPLETE NPDES: (DAYS) 7 days notice prior to construction

TIME TO BUY RIGHT-OF-WAY: (MONTHS) Not Applicable. All construction within existing R/W.

LOCAL GOVERNMENT COMMITMENTS: (1) LGPA for utilities; (2) Dougherty County commitment to energize and maintain new lighting.

OTHER PROJECTS IN THE AREA:
Railroad bridge replacement just west of interchange BRST-093-1(44), PI No. 432125

PROBABLE LOCATION OF UST'S: One UST is located at the truck terminal just east of the northbound entrance ramp.

PROBABLE LOCATION OF HAZARDOUS WASTE: One site is a residence with a pool at the beginning of the project. Two AST sites are north of the project limits.

OTHER ALTERNATES CONSIDERED:

1. No Build
2. Parclo B - This alternative solves the weaving problem associated with the existing cloverleaf, but does not solve the sight distance related safety problems.
3. Diamond - Although the weaving and sight distance problems are solved, the LOS is worse (C or D) than for other alternatives (B or C).

COMMENTS:

ATTACHMENTS: Sketch Map, Need and Purpose Statement, Cost Estimates, Typical Sections, Capacity Analysis, Weaving Analysis, Project Sketch

PROJECT NH-006-2(57)
PI 422570 DOUGHERTY COUNTY
LOCATION SKETCH MAP

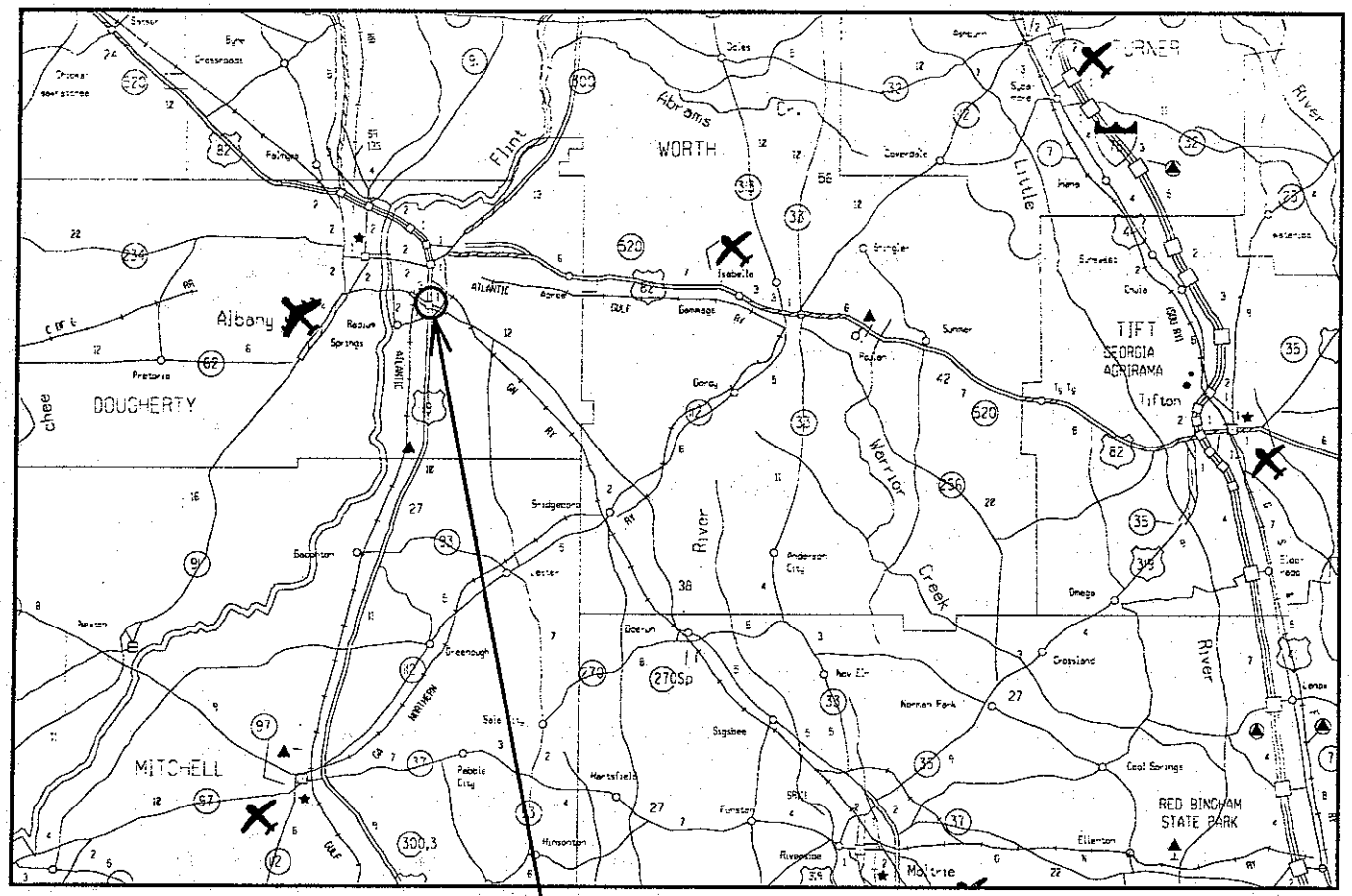

SR 3/LIBERTY EXPRESSWAY @
SR 133/MOULTRIE ROAD INTERCHANGE

ACCIDENT HISTORY

Georgia DOT traffic accident records from 1995 through 1997 for the Liberty Expressway and Moultrie Road Interchange (depicted on the attached collision diagrams) were reviewed to identify any correctable accident patterns that might suggest a safer design.

Head-on accidents indicate a wrong way movement may have taken place, and if not corrected may continue. In this case, two head-on accidents occurred: one in 1996 and the other in 1997. One occurred in the northbound direction of Liberty Expressway, between the two loop ramps, in the weaving area. The other occurred on the loop ramp in the southeast quadrant of the interchange. Neither accident involved a fatality. These head-on accidents indicate potential misdirection at the median openings on controlled access portion of Liberty Expressway, north of Moultrie Road. A review should be made of the signage on Liberty Expressway between Moultrie Road and Oglethorpe Boulevard (US 82 Bus./SR 520 Bus.) to identify any inadequate signing that might contribute to wrong-way movements.

The cloverleaf interchange form does not function well under moderate to heavy traffic volumes because of built-in weaving sections between the loop ramps. In this case, there were 8 accidents southbound and 14 accidents northbound related to the weaving sections on the freeway from 1995 to 1997. The proposed design should eliminate these weaving sections and eliminate this type of accident in the future.

Four accidents occurred at the southbound exit loop ramp gore on Liberty Expressway from 1995 to 1997.

One accident occurred at the eastbound exit loop ramp gore on Moultrie Road from 1995 to 1997. Additional traffic accident reports provided by Albany/Dougherty County indicate out-of-control accidents at this location: one accident in 1994 and three in 1998. The proposed design should significantly reduce this type of out-of-control accident on the loop ramps in the future by changing the interchange form to eliminate loop ramps on the far side of the cross street.

PROPOSED DESIGN

PROPOSED TYPICAL SECTION: Typical sections attached.

PROPOSED RIGHT-OF-WAY WIDTH: No Change

DESIGN SPEED	MIN. PROPOSED RADIUS OF CURVE	MAX. PROPOSED GRADE
Liberty Exp. Ramps: 45 m.p.h.	643'	0.5%
Moultrie Road: 45 m.p.h.	N/A	N/A

TYPE ACCESS: Limited access on Liberty Expressway and at the interchange

TRAFFIC CONTROL DURING CONSTRUCTION: Maintain existing traffic during construction.

PROPOSED STRUCTURES: One culvert crossing the Marine Canal ✓
WIDEN EXISTING SR 133 BRIDGES OVER MOULTRIE RD

DESIGN EXCEPTIONS REQUIRED FOR CONTROLLING CRITERIA

MC 5/31/01

	UNDETERMINED	YES	NO
HORIZONTAL ALIGNMENT	( )	( )	(X)
ROADWAY WIDTH	( )	( )	(X)
SHOULDER WIDTH	( )	( )	(X)
VERTICAL GRADES	( )	( )	(X)
CROSS SLOPES	( )	( )	(X)
STOPPING SIGHT DISTANCE	( )	( )	(X)
SUPERELEVATION RATES	( )	( )	(X)
HORIZONTAL CLEARANCE	( )	( )	(X)
SPEED DESIGN	( )	( )	(X)
VERTICAL CLEARANCE	( )	( )	(X)
BRIDGE WIDTH	( )	( )	(X)
BRIDGES STRUCTURAL CAPACITY	( )	( )	(X)

NUMBER OF PARCELS: 0

DISPLACEMENTS: 0

Need and Purpose Statement
Liberty Expressway/ Moultrie Road Interchange
NH-006-2(57)
PI# 422570
DOUGHERTY County

The proposed project is part of the Dougherty Area Regional Transportation Study's (DARTS) 2025 Transportation Plan and the Department's State Transportation Improvement Program. The project will reconstruct the cloverleaf interchange at Liberty Expressway/Moultrie Road to a Parclo A interchange. The project will also add a left-turn lane to the southbound and northbound exit ramps from Liberty Expressway. The project is contained within the existing interchange right-of-way. Construction on the Liberty Expressway will be limited to loop ramp tie-ins. Construction on Moultrie Road will include a center median, widening for a right-turn lane at the loop ramps and signals. Construction will tie into the existing four-lane typical section.

There is one programmed project in the area and one planned project identified in DARTS' 2025 Transportation Plan. The programmed project is a bridge project, BRST-093-1(44), PI# 432125, which will replace the bridge over the railroad located just west of the interchange. The planned project is identified as Project 29 in the 2025 Transportation Plan with proposed construction between 2015 and 2025. Project 29 would widen Liberty Expressway from four to six lanes between SR-133 and Dawson Road. The 2025 Transportation Plan also identifies an on-street bicycle corridor along Moultrie Road. The proposed interchange project will not restrict consideration of alternates for the identified project in the 2025 Transportation Plan, the programmed bridge project or the proposed bicycle corridor.

Land surrounding the interchange is identified in the 2025 Transportation Plan as undeveloped to the south and residential and industrial to the north. South of the interchange the land is undeveloped with one commercial parcel located near the west project limits. The southeast quadrant and the adjacent land have a pond and U.S. Marine Corps drainage canal. There is a mobile home community located in the area adjacent to the interchange's northwest quadrant and a potentially hazardous material site. Adjacent to the northeast quadrant of the interchange the property is zoned industrial. In this quadrant, Procter and Gamble has a paper product facility and there is a trucking company with underground storage tanks. This project must address the environmental and environmental justice concerns associated with the small ponds, U.S. Marine Corps drainage canal, underground storage tanks and low-income community.

There were a total of 46 accidents within the interchange limits between 1995 and 1997. Ten accidents occurred in 1995 with half of the accidents at or on a ramp and one accident in the weave area. There were 20 accidents in 1996 with only five accidents at or on a ramp and eight accidents in the weave areas. In 1997, there were a total of 16 accidents, one on or at a ramp and nine in the weave areas. Approximately 24% of the total number of accidents occurred at or on a ramp between 1995 and 1997, and approximately 40% occurred in weave areas.

Traffic volumes for the project were projected for the Design Year 2005 and future year traffic of 2025. Design year traffic on the ramps is projected between 500 and 3,700 vehicles per day and volumes are projected to increase to between 765 and 5,500 vehicles per day by 2025. Traffic on the mainlines is projected to increase from 19,300 vehicles per day in 2005 to 27,800 vehicles per day by 2025 on Moultrie Road and from 23,000 vehicles per day in 2005 to 29,700 vehicles per day by 2025 on Liberty Expressway. Truck traffic accounts for approximately 14% of the traffic volume through the interchange.

The ramps and mainlines within the interchange currently function at acceptable Levels of Service. They are also projected to function at acceptable levels through 2025. The ramps and weave areas are all functioning at a Level of Service of B or greater and will function at a level B through 2025. This project will eliminate the weaving movements on the mainlines between the loop ramps. The elimination of the weaving movements will reduce the number of accidents occurring within the interchange, thus improving safety within the interchange.

PRELIMINARY COST ESTIMATE

URBAN DESIGN OFFICE

PARCLO "A" INTERCHANGE

DATE: 4/25/01 **PREPARED BY:** Greenhorne & O'Mara, Inc.

PROJECT NO.: NH-006-2(57) **FILE NAME:** Prelim WO7 Cost Est.xls

P.I. NO.: 422570 **MILEAGE:** 1.56 miles

PROJECT DESCRIPTION/CONCEPT: SR 3/Liberty Expressway - SR 133/Moultrie Road Interchange improvements

EXISTING ROADWAY: Moultrie Road - four-lane divided rural highway with depressed grass median and shoulders

TRAFFIC: **BASE YEAR ADT** 14,790 (2005) **DESIGN YEAR ADT** 21,930 (2025)

- ☐ **PROGRAMMING PROCESS**
- ☑ **CONCEPT DEVELOPMENT**
- ☐ **DURING PROJECT DEVELOPMENT**

PROJECT COSTS:

A. RIGHT OF WAY		lump sum			$0
				SUBTOTAL	**$0**
B. UTILITIES (Local)					
City of Albany Water, Gas & Light		non-reimbursable			$1,474,000
BellSouth		non-reimbursable			$2,000,000
Georgia Power Company		reimbursable			$280,000
Georgia Power Company		non-reimbursable			$102,500
Municipal Electric Authority of Georgia		reimbursable			$105,000
Municipal Electric Authority of Georgia		non-reimbursable			$35,000
				REIMBURSABLE SUBTOTAL	**$385,000**
				NON-REIMBURSABLE SUBTOTAL	**$3,611,500**
C. CLEARING AND GRUBBING	10	acres	@	$1,182	$11,820
				SUBTOTAL	**$11,820**
D. EARTHWORK					
Unclassified Excavation	16125	cu yd	@	$5	$80,625
				SUBTOTAL	**$80,625**
E. BASE AND PAVING					
Asphalt Paving					
12.5 mm Superpave	3794	tons	@	$45	$170,730
19 mm Superpave	5059	tons	@	$35	$177,065
25 mm Superpave	5418	tons	@	$42	$227,556
Bituminous Tack Coat	4178	gallons	@	$1	$4,178
Leveling	4063	tons	@	$41	$166,095
Aggregate Base					
Graded Aggregate Base 10"	363	tons	@	$12	$4,356
				SUBTOTAL	**$749,980**

Parcio A
Preliminary Cost Estimate

F. DRAINAGE					
Drainage Lump Sum					
Cost per Mile	1.56	miles	@	$250,000	$390,000
				SUBTOTAL	**$390,000**
G. CONCRETE WORK					
Concrete Barrier (on roadway)	1085	lin ft	@	$200	$217,000
				SUBTOTAL	**$217,000**
H. TRAFFIC CONTROL		lump sum			$117,000
				SUBTOTAL	**$117,000**
I. EROSION CONTROL		lump sum			$104,000
				SUBTOTAL	**$104,000**
J. GUARDRAIL					
W-Beam Rail	4270	lin ft	@	$11	$45,347
T-Beam Rail	58	lin ft	@	$28	$1,616
Type 1 Anchors	14	each	@	$426	$5,964
Type 12 Anchors	13	each	@	$1,574	$20,468
				SUBTOTAL	**$73,396**
K. SIGNS, STRIPING, SIGNALS, LIGHTING					
Striping		lump sum			$14,400
Roadside Signs		lump sum			$14,200
Freeway Guide Signs	426	sq ft	@	$45	$19,170
Freeway Guide Sign Trusses	160	lin ft	@	$650	$104,000
Overhead Guide Signs - Span Wire Mountec	1342	sq ft	@	$35	$46,970
Strain Poles, TP IV, for Overhead Signs	8	each	@	$5,000	$40,000
Ground Mounted Destination Signs	335	sq ft	@	$20	$6,700
Galv Steel Posts	288	lin ft	@	$5	$1,440
Traffic Signals	2	each	@	$75,000	$150,000
Traffic Signal System Master	1	each	@	$20,000	$20,000
Fiber Optic Cable		lump sum			$60,000
Lighting	10	each	@	$12,000	$120,000
				SUBTOTAL	**$596,880**
L. GRASSING		lump sum			$4,000
				SUBTOTAL	**$4,000**
M. MISCELLANEOUS					
Field Engineers Office Tp. 1	1	each	@	$20,000	$20,000
				SUBTOTAL	**$20,000**
N. MAJOR STRUCTURES					
Widening Bridges	22,058	sq. ft.	@	$60	$1,323,480
Concrete Barrier (on bridge)	596	lin ft	@	$200	$119,200
Culvert				$110,000	$110,000
				SUBTOTAL	**$1,552,680**

Parclo A
Preliminary Cost Estimate

ESTIMATE SUMMARY

A. Right of Way		$0
B. Utilities (Local)		
Reimbursable		$385,000
Non-Reimbursable		$3,611,500
CONSTRUCTION COST SUMMARY		
C. Clearing and Grubbing		$11,820
D. Earthwork		$80,625
E. Base and Paving		$749,980
F. Drainage		$390,000
G. Concrete Work		$217,000
H. Traffic Control		$117,000
I. Erosion Control		$104,000
J. Guardrail		$73,396
K. Signs, Striping, Signals, Lighting		$596,880
L. Grassing		$4,000
M. Miscellaneous		$20,000
N. Major Structures		$1,552,680
SUBTOTAL CONSTRUCTION		**$3,917,381**
1 year of inflation at	4 %	$156,695
	10 % E & C	$407,408
TOTAL CONSTRUCTION ESTIMATE:		**$4,481,484**

STATE	PROJECT NUMBER
GA.	NH-006-2(157)

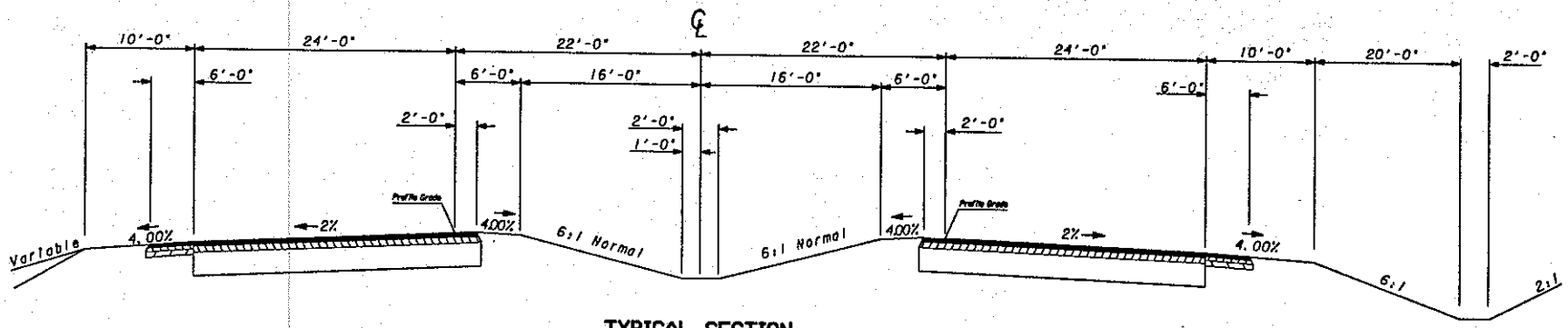

TYPICAL SECTION
MOULTRIE ROAD

NOT TO SCALE

GREENHORNE & O'MARA
2221 NEWMARKET PARKWAY
SUITE 184
MARIETTA, GA. 30067
(770) 955-1555

DATE	REVISION	DATE	REVISION

GEORGIA
DEPARTMENT OF TRANSPORTATION
TYPICAL SECTIONS
PROJECT: NH-006-2157)
COUNTY: DOUGHERTY
DATE: DRAWING

STATE	PROJECT NUMBER	NO.	SHEET NO.
GA.	NH-006-2(157)		

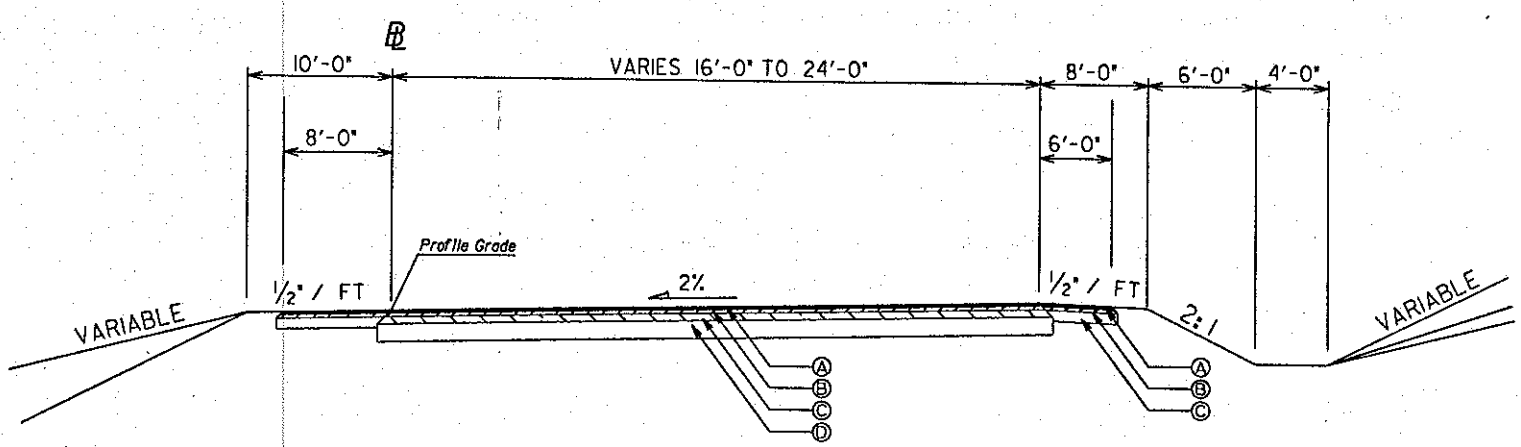

LIBERTY EXPRESSWAY NORTHBOUND EXIT RAMP TYPICAL SECTION

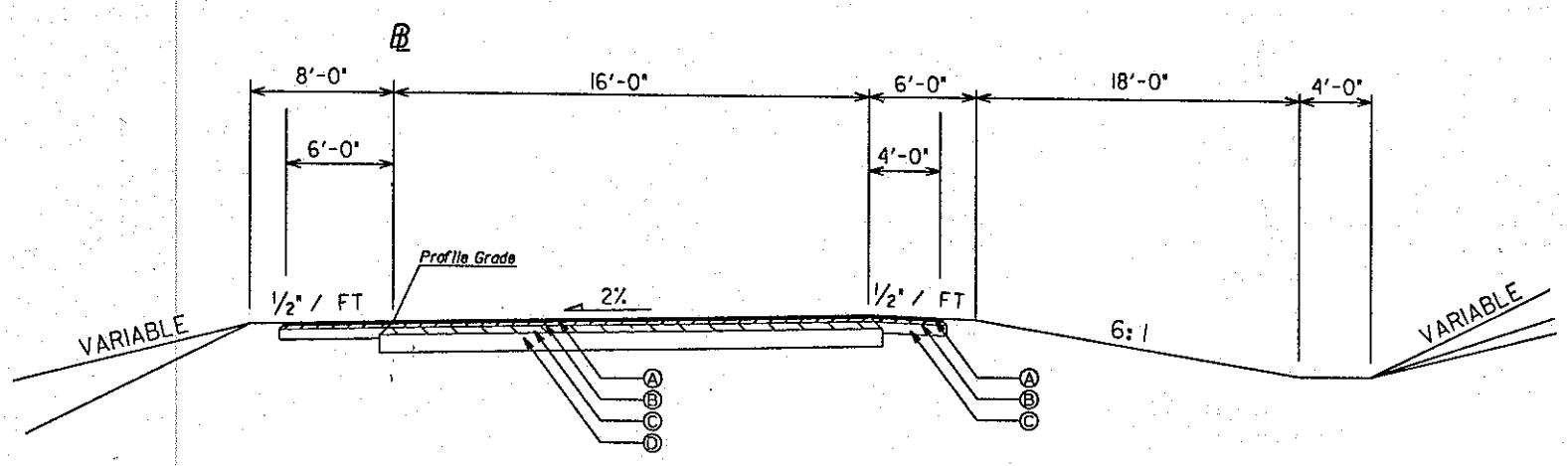

LIBERTY EXPRESSWAY SOUTHBOUND EXIT RAMP TYPICAL SECTION

NOT TO SCALE

GREENHORNE & O'MARA
2211 NEWMARKET PARKWAY
SUITE 184
MARIETTA, GA. 30067
(770) 955-1555

DATE	REVISIONS	DATE	REVISIONS

GEORGIA
DEPARTMENT OF TRANSPORTATION
TYPICAL SECTIONS
PROJECT: NH-006-2(157)
COUNTY: DOUGHERTY
DATE: DRAWING

STATE	PROJECT NUMBER		
GA.	NH-006-2(57)		

TO BE REMOVED
DURING CONSTRUCTION

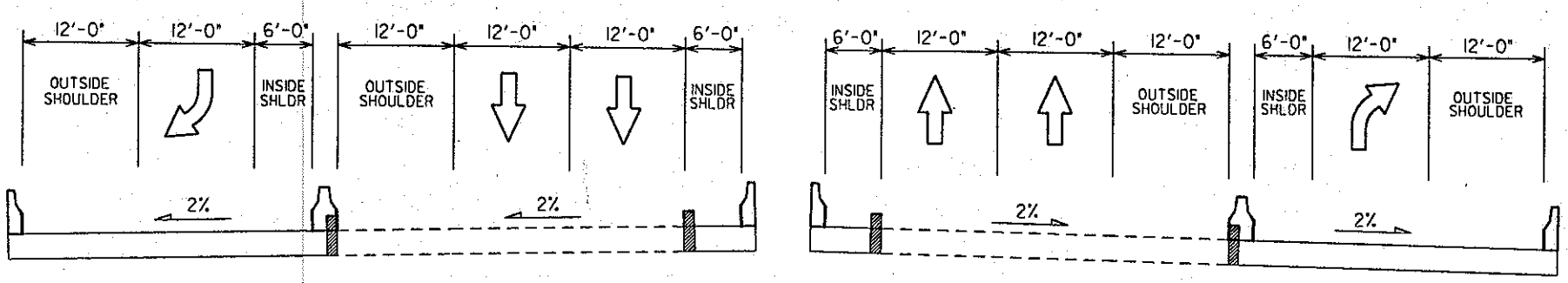

TYPICAL SECTION

MOULTRIE ROAD BRIDGES OVER LIBERTY EXPRESSWAY

NOT TO SCALE

GREENHORNE & O'MARA
2231 NEWMARKET PARKWAY
SUITE 114
MARIETTA, GA. 30067
(770) 988-9005

DATE	REVISIONS	DATE	REVISIONS

GEORGIA
DEPARTMENT OF TRANSPORTATION
TYPICAL SECTIONS
PROJECT: NH-006-2(57)
COUNTY: DOUGHERTY
DATE: DRAWING

SR 3 @ MOULTRIE ROAD INTERCHANGE
Capacity Analysis

Base Conditions

Table 1: Freeway 2005 No Build Level of Service

LOCATION	NUMBER OF LANES	AVERAGE SPEED (MPH)	DENSITY (PC/MI/LN)	LEVEL OF SERVICE
SR 3 NB AFTER MOULTRIE ROAD	2	65	12.3	B

Table 2: Ramp Merge/Diverge 2005 No Build Level of Service

SR 3 RAMPS	AM PEAK HOUR			PM PEAK HOUR		
	LOS	DENSITY (PC/MI/LN)	SPEED (MPH)	LOS	DENSITY (PC/MI/LN)	SPEED (MPH)
SR 3/MOULTRIE RD NB ON RAMP	B	15-	58	B	13+	58.1
SR 3/MOULTRIE RD SB ON RAMP	A	10-	58.2	B	11-	58.2
SR 3/MOULTRIE RD NB OFF RAMP	A	9+	55	A	8+	55
SR 3/CLARK AVE SB OFF RAMP	B	12-	54	B	13+	54

Table 3: Weaving Section 2005 No Build Level of Service

LOCATION	AM PEAK HOUR			PM PEAK HOUR		
	LOS	DENSITY (PC/MI/LN)	SPEED (MPH)	LOS	DENSITY (PC/MI/LN)	SPEED (MPH)
SR 3/MOULTRIE RD SB WEAVING	A	5.82	59.93	A	6.73	59.11
SR 3/MOULTRIE RD NB WEAVING	A	9.40	52.55	A	8.42	53.09
MOULTRIE RD/SR 3 EB WEAVING	B	12.14	39.43	B	10.50	39.22
MOULTRIE RD/SR 3 WB WEAVING	A	5.10	49.50	A	6.52	49.04

Table 4: Intersection 2005 No Build Level of Service

INTERSECTION	AM PEAK HOUR		PM PEAK HOUR	
	LOS	AVG. DELAY (SEC/VEH)	LOS	AVG. DELAY (SEC/VEH)
MOULTRIE RD/S. MOCK RD/HOLLY DR	C	28.8	C	32.0
MOULTRIE RD/MOTOR CARRIERS DR[1]	B	14.1	C	16.8

[1]Analyzed as stop controlled intersection.

Projected Conditions

Table 5: Freeway 2025 No Build Level of Service

LOCATION	NUMBER OF LANES	AVERAGE SPEED (MPH)	DENSITY (PC/MI/LN)	LEVEL OF SERVICE
SR 3 NB AFTER MOULTRIE ROAD	2	65	17.4	C

Table 6: Ramp Merge/Diverge 2025 No Build Level of Service

SR 3 RAMPS	AM PEAK HOUR			PM PEAK HOUR		
	LOS	DENSITY (PC/MI/LN)	SPEED (MPH)	LOS	DENSITY (PC/MI/LN)	SPEED (MPH)
SR 3/MOULTRIE RD NB ON RAMP	B	20-	57.6	B	18-	57.8
SR 3/MOULTRIE RD SB ON RAMP	B	13	58.1	B	14	58.0
SR 3/MOULTRIE RD NB OFF RAMP	A	9+	55	A	8+	55
SR 3/CLARK AVE SB OFF RAMP	B	12-	54	B	13+	54

Table 7: Weaving Section 2025 No Build Level of Service

LOCATION	AM PEAK HOUR			PM PEAK HOUR		
	LOS	DENSITY (PC/MI/LN)	SPEED (MPH)	LOS	DENSITY (PC/MI/LN)	SPEED (MPH)
SR 3/MOULTRIE RD SB WEAVING	A	8.84	56.14	B	10.24	55.16
SR 3/MOULTRIE RD NB WEAVING	B	14.73	47.55	B	13.23	48.06
MOULTRIE RD/SR 3 EB WEAVING	B	17.53	38.81	B	15.21	38.49
MOULTRIE RD/SR 3 WB WEAVING	A	6.98	51.35	A	8.99	50.59

Table 8: Intersection 2025 No Build Level of Service

INTERSECTION	AM PEAK HOUR		PM PEAK HOUR	
	LOS	AVG. DELAY (SEC/VEH)	LOS	AVG. DELAY (SEC/VEH)
MOULTRIE RD/S. MOCK RD/HOLLY DR	D	41.7	D	42.4
MOULTRIE RD/MOTOR CARRIERS DR[1]	C	17.9	D	28.4

[1]Analyzed as stop controlled intersection.

Table 9: Ramp Merge/Diverge 2025 Build Level of Service (PARCLO A)

SR3 RAMPS	AM PEAK HOUR			PM PEAK HOUR		
	LOS	DENSITY (PC/MI/LN)	SPEED (MPH)	LOS	DENSITY (PC/MI/LN)	SPEED (MPH)
LIBERTY/MOULTRIE RD SB OFF	B	17+	53	B	19+	53
LIBERTY/MOULTRIE RD NB OFF	B	13-	54	B	12-	54

Table 10: Intersection 2025 Build Level of Service (PARCLO A)

INTERSECTION	AM PEAK HOUR		PM PEAK HOUR	
	LOS	AVG. DELAY (SEC/VEH)	LOS	AVG. DELAY (SEC/VEH)
LIBERTY NB OFF/MOULTRIE RD	B	12.3	B	11.6
LIBERTY SB OFF/MOULTRIE RD	B	16.8	B	15.8

Table 11: Intersection 2025 Build Level of Service (PARCLO B)

INTERSECTION	AM PEAK HOUR		PM PEAK HOUR	
	LOS	AVG. DELAY (SEC/VEH)	LOS	AVG. DELAY (SEC/VEH)
LIBERTY NB ON/MOULTRIE RD	A	7.7	A	8.7
LIBERTY SB ON/MOULTRIE RD	A	4.5	A	3.8

Table 12: Ramp Merge/Diverge 2025 Build Level of Service (Diamond)

SR 3 RAMPS	AM PEAK HOUR			PM PEAK HOUR		
	LOS	DENSITY (PC/MI/LN)	SPEED (MPH)	LOS	DENSITY (PC/MI/LN)	SPEED (MPH)
LIBERTY/MOULTRIE RD SB OFF	B	17+	53	B	19+	53
LIBERTY/MOULTRIE RD NB OFF	B	13-	54	B	12-	54
LIBERTY/MOULTRIE RD NB ON	B	19+	57.6	B	18-	57.8
LIBERTY/MOULTRIE RD SB ON	B	13-	58.1	B	14+	58

Table 13: Intersection 2025 Build Level of Service (Diamond)

INTERSECTION	AM PEAK HOUR		PM PEAK HOUR	
	LOS	AVG. DELAY (SEC/VEH)	LOS	AVG. DELAY (SEC/VEH)
LIBERTY NB OFF/MOULTRIE RD	C	22.6	C	30.5
LIBERTY SB OFF/MOULTRIE RD	D	39.7	C	28.6

PROJECT NH-006-2(57)
PI NO. 422570 DOUGHERTY COUNTY
PROJECT SKETCH

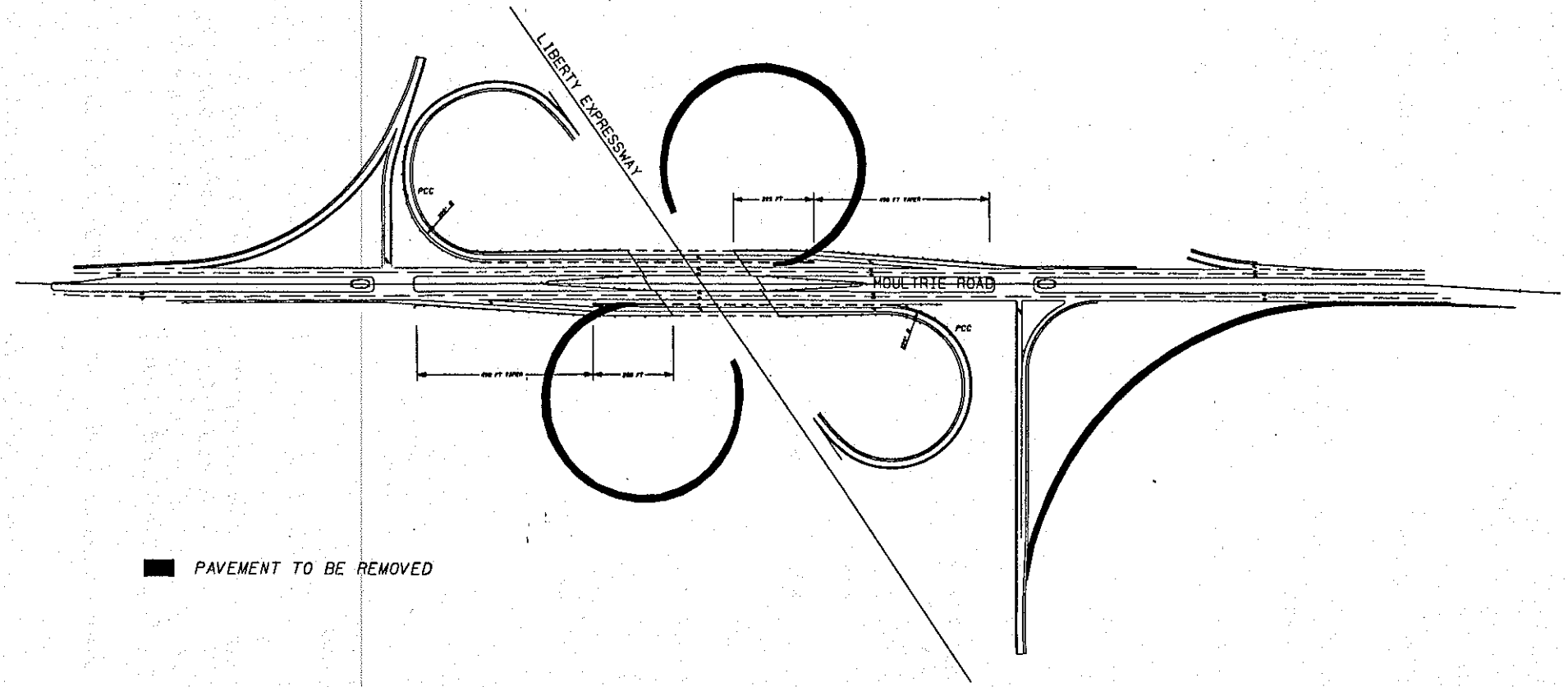

PAVEMENT TO BE REMOVED

From: LOW, David (Atl)
Sent: Thursday, April 19, 2001 10:24 AM
To: 'Summers, Brian'
Cc: Jan Hilliard (E-mail)
Subject: RE: Moultrie Road bridges over Liberty Expressway, Dougherty Coun ty
Brian,

The widening of both bridges is included in this SR 3/Liberty Expressway @ SR 133/Moultrie Road Interchange improvement project. Project No. NH-006-2(57), Dougherty County, P.I. No. 422570.

Thanks,

David W. Low, P.E.
Greenhorne & O'Mara, Inc.
2211 New Market Parkway, Suite 104
Marietta, Georgia 30067
e-mail: dwlow@g-and-o.com
Telephone: 770-956-8510 ext 252
Fax: 770-952-0653

-----Original Message-----
From: Summers, Brian [mailto:Brian.Summers@dot.state.ga.us]
Sent: Thursday, April 19, 2001 10:00 AM
To: 'DWLOW@g-and-o.com'
Subject: FW: Moultrie Road bridges over Liberty Expressway, Dougherty Coun ty

Both bridges are in good condition and are suitable for widening. Both are HS-20 design structures. Are the bridges to be widened in this project as indicated? If so, what is the proposed project number and P.I. No.?

-----Original Message-----
From: Duvall, Bill
Sent: Tuesday, April 17, 2001 8:31 AM
To: Summers, Brian
Subject: FW: Moultrie Road bridges over Liberty Expressway, Dougherty County

-----Original Message-----
From: LOW, David (Atl) [SMTP:DWLOW@g-and-o.com]
Sent: Monday, April 16, 2001 2:25 PM
To: 'bill.duvall@dot.state.ga.us'
Cc: Jan Hilliard (E-mail)
Subject: Moultrie Road bridges over Liberty Expressway, Dougherty County

We are preparing a concept for improvements to the interchange of SR 133/Moultrie Road and SR 3/Liberty Expressway in Dougherty County. We understand the sufficiency rating for the SR 133/Moultrie Road bridges is 70.4 for both the north and south bridges.

Please give us your recommendation on whether these bridges can be widened.

GREENHORNE & O'MARA, INC.

VISIONS. SOLUTIONS.

GENERAL CIVIL
TRANSPORTATION
ENVIRONMENTAL
GEOGRAPHIC SCIENCES

MEMORANDUM OF MEETING NO. 4

PROJECT: SR 3/Liberty Expressway at Clark Avenue Interchange
Project No. NH-006-2(56), Dougherty County, P.I. No. 422560

SR 3/Liberty Expressway at SR 133/Moultrie Road Interchange
Project No. NH-006-2(57), Dougherty County, P.I. No. 422570

G&O Project No. 0094, Work Order No. 6 & 7

DATE/PLACE: March 19, 2001 Georgia DOT Office of Urban Design

PRESENT:

Albert Shelby, GDOT UD	404-656-5440	albert.shelby@dot.state.ga.us
Vickie Dodson, G&O	770-956-8510 x 223	vdodson@g-and-o.com
Emory Giddens, GDOT Utilities	229-386-3288	emory.giddens@dot.state.ga.us
Danny P. Gay, GDOT D Tr Ops	229-386-3435	danny.gay@dot.state.ga.us
Don R. Gaskins, GDOT DPP&E	229-386-3045	gaskins.don@dot.state.ga.us
David Mulling, GDOT Eng Srvcs	404-656-6846	david.mulling@dot.state.ga.us
Angela T. Alexander, GDOT UD	404-657-9872	angela.alexander@dot.state.ga.us
Joe Palladi, GDOT UD	404-656-5436	joe.palladi@dot.state.ga.us
Erik Dilts, G&O	770-956-8510 x 224	edilts@g-and-o.com
Darrell Richardson, GDOT UD	404-656-5440	darrell.richardson@dot.state.ga.us
Ulysses Mitchell, GDOT Plng	404-656-5560	ulysses.mitchell@dot.state.ga.us
Katie Mullins, GDOT Progrmg	404-651-7043	katie.mullins@dot.state.ga.us
Brook Martin, GDOT Traffic Ops	404-635-8127	brook.martin@dot.state.ga.us
Andrew Aiello, GDOT OEL	404-699-4432	andrew.aiello@dot.state.ga.us
Jan C. Hilliard, GDOT UD	404-656-5440	jan.hilliard@dot.state.ga.us
David Low, G&O	770-956-8510 x 252	dwlow@g-and-o.com

DISTRIBUTION:

Those present		
Bob Miller, G&O	770-956-8510 x 217	bmiller@g-and-o.com
Theon Grojean, G&O	770-956-8510 x 218	tgrojean@g-and-o.com
Xuewen Le, G&O	770-956-8510 x 231	xle@g-and-o.com

PURPOSE: Concept Team Meeting

DISCUSSION:
Darrell Richardson was in charge of the Concept Team Meeting. He said the meeting would cover interchanges on Liberty Expressway in Albany at Clark Avenue and Moultrie Road. They will be let

separately.

I. SR 133/Moultrie Road at Liberty Expressway Interchange

Project Introduction and Presentation of the Concept

1. Darrell Richardson introduced the project. This is NH-006-2(57) Dougherty County, P.I. No. 422570.

2. Don Gaskins said this project is scheduled for letting in FY 2002. It will be tough to make that schedule.

3. David Low presented the proposed concept report and concept plan. For both of these projects, the traffic projections, project limits and costs are significantly higher than what was programmed in the TIP. For the Moultrie Road interchange, he recommended converting the existing cloverleaf interchange into a Parclo A interchange with signals at the two ramp terminals. He discussed other alternatives that were studied and rejected including the No Build, Diamond and Parclo B. David reviewed the proposed cost estimate. Please refer to the attached brief for additional details.

Environmental Issues

4. Erik Dilts said that the environmental document will be a Categorical Exclusion (CE). Nationwide Permit 23 will authorize impacts to the Marine Corps Canal if FHWA approves the project as a CE.

5. Three wood storks, a Federally endangered species, were observed in a detention pond at the Clark Avenue interchange. Because of this occurrence, Erik said that OEL has requested the use of special measures during construction at the Clark Avenue interchange. These special measures will also be implemented at the Moultrie Road interchange, because of its proximity to the Clark Avenue interchange and because the Marine Corps Canal provides wood stork foraging habitat. Special measures will include training of construction personnel, additional erosion and sediment control measures, work stoppage if any wood storks are observed in the vicinity of the project, and recording of any wood stork sightings made during construction.

6. Erik said the Ecology Report is complete with the exception of a survey of the Marine Corps Canal for protected fish and mussels, which was requested by OEL. Dan Gaskins asked when Erik anticipates getting the document to OEL for approval and then to FHWA. Erik said that is dependent on when the fish and mussel survey is completed.

Moultrie Road is a Designated Bicycle Route

7. Although Moultrie Road is a designated bicycle route, it is currently just a line on a map and

there are no active plans for bicycle facilities. Joe Palladi asked what would be recommended if there were bike lanes on Moultrie Road? David Low said the bridge would be widened on each side for a bike lane and shoulder. There are currently no shoulders on the bridge.

Length of Deceleration Lane and Sight Distance

8. Darrell Richardson asked if the EB decel lane to the NB loop ramp is long enough to get around traffic queued at the new signal so it will not block free flow to the ramp.

9. Joe Palladi asked if you can see the traffic queue in time to stop. Danny Gay was also concerned with sight distance. He said that people travel at 60 to 65 mph over this crest. He's worried about people not seeing traffic backed up at a signal in time to stop. Examine the sight distance over the crest vertical curve. Look at the EB approach to both signals. Sight distance going across the crest needs to be examined both for the signal and the traffic queued from the signal.

Bridge Rating

10. Angela Alexander asked if the bridge sufficiency rating had been pulled. It had not.

Lighting

11. Darrell Richardson asked why lighting was included in the cost estimate. David Low said there are mast cluster lights at the Clark Avenue interchange and we have several accidents, especially where the SB entrance ramp merges with the SB main line. Lighting would make the entire interchange safer. There have also been several weaving and out of control type accidents at this interchange. Joe Palladi said that Urban Design needs to check with the locals on the lighting issue to determine if the locals will pay to energize and maintain.

    (Darrell Richardson received a subsequent request from Mr. Richard Crowdis, Dougherty County Administrator, to include lighting in the Moultrie Road interchange.)

NB to EB Ramp Modification

12. David Mulling asked why part of NB to EB ramp was relocated and none on the other side of the interchange? David Low said that Darrell had suggested it to increase the weaving distance to the truck terminal.

Swap Program Funds for Right of Way between Moultrie Road and Clark Avenue Interchanges

13. Katie Mullins asked if any right of way was required for this project. David Low said that all improvements would be constructed within the existing right of way. Katie said money had been programmed for right of way at the interchange but have none programmed for right of way at the Clark Avenue interchange. These need to be swapped.

Free Flow Movements

14. Danny Gay said he felt that we were going in the wrong direction by installing traffic signals and removing the free-flow of the interchange. He asked if there is a way to maintain the loop ramps.

    David Low said the reason to modify this interchange is because of the accident problem, not a capacity problem. Even with the proposed improvements, there is excess capacity at this interchange in the design year. Accidents occur because vehicles traveling at a high rate of speed on the Liberty Expressway main line are not able to see the gore on the far side of the interchange in time to slow down enough to negotiate the loop ramp at a safe speed. Several vehicles have had "out of control" type accidents on the loop ramp. Removing the loop ramps in the SW and NE quadrants is recommended to solve this problem. Keeping these loop ramps will not resolve this accident problem. There is enough extra capacity at this interchange to make this conversion to a Parclo A interchange. With this change and signalization of the ramp terminals, both ramp terminals will operate at LOS B in the design year, 2025, AM and PM peak hours.

Speed Differential

15. Joe Palladi asked what the speeds are on the mainline and the loop ramps. David Low said the speed limits are 55 on Liberty Expressway, 45 on Moultrie Road, and the loop ramps have 25 mph advisory speeds. Joe noted that the speed differential is one of the main problems at this interchange. He asked how there can be a mainline speed of 45 or 55 transitioning to a speed of 25 on the loop ramp. The green book says there should be no more than a 10 mph speed differential. He directed G&O to separate the EB decel lane from the EB mainline on Moultrie Road with a concrete barrier and to provide advance signing for a reduction in speed on the decel lane and the loop ramp.

16. Joe said we want Liberty Expressway to operate as an expressway. The highest volume loop ramp is in the SE quadrant and second highest is in the SW quadrant. Joe said you have to take out the loop in the SW quadrant to resolve the speed differential between the 55 mph SB mainline and the 25 mph SB to EB loop ramp.

Interchange Form

17. Joe said that a diamond interchange is more bicycle-friendly than a Parclo. However a diamond interchange has a worse level of service because the signals have three phases. Parclo interchanges provide more capacity than diamond interchange designs because the signals have only two phases. In this case a Parclo interchange will operate at LOS B while a diamond interchange will operate at LOS C and D in the AM and PM peak hours respectively.

18. Angela Alexander asked if the locals have expressed a preference for a concept. Urban Design will ask when they meet with them soon.

Need and Purpose Statement

19. Ulysses Mitchell will provide an updated Need and Purpose Statement in the next two weeks.

Utilities

20. Emory Giddens said the utilities in the area include City of Albany Water, Gas and Light, Georgia Power transmission and distribution lines, and Municipal Electric Cooperative of Georgia. There is a major 10-inch gas line on the west side of Liberty Expressway. Emory gave Jan Hilliard a copy of the utility cost estimate, which she in turn gave to G&O. Emory said he thinks the utility cost estimate he prepared prior to the Concept Team Meeting is much too high based on the relatively minor impacts he learned of at the meeting.

21. Joe Palladi asked if we need ITS. Danny Gay said yes, to include fiber optic cable in the cost estimate.

II. Clark Avenue at Liberty Expressway Interchange

Project Introduction and Presentation of the Concept

1. Darrell Richardson introduced the project. This is NH-006-2(56), Dougherty County, P.I. No. 422560.

2. Don Gaskins said this project is also scheduled for letting in FY 2002. Again, it will be tough to make that schedule.

3. David Low presented the proposed concept report, concept plan and cost estimate. As with the Moultrie Road interchange, the traffic projections, project limits and costs for the Clark Avenue interchange are much higher than programmed in the TIP. Please refer to the attached brief for additional details.

Need and Purpose Statement

4. Ulysses Mitchell will provide an updated Need and Purpose Statement in the next two weeks.

Environmental Issues

5. Erik Dilts said that the environmental document will be a Categorical Exclusion (CE). No impacts to any areas of U.S. Army Corps or Engineers jurisdiction are expected.

6. Erik said that three wood storks, a Federally endangered species, were observed in the large detention pond in the NW quadrant of this interchange during field survey. As a result special measures must be taken during construction to avoid impacts to wood storks or their habitat. These special measures are described in the project ecology report, which he distributed. These

special measures include additional erosion and sediment control best management practices to minimize sedimentation of wood stork foraging habitat (e.g., multiple rows of silt fences, blanket placement, rapid stabilization of disturbed areas) and personnel instruction. Construction workers should be trained to know what wood storks look like, their habits, etc. If there is a sighting of wood storks, all work must stop until the birds move a safe distance from the project. Under no conditions should these birds be harmed or harassed in any way. If these special measures are followed, there should not be a need for formal Section 7 consultation with the U.S. Fish and Wildlife Service (FWS). However, U.S. FWS may still comment on the project when the CE is circulated among agencies.

Bow Out for Heavy Left Turns

7. Joe Palladi brought up the heavy left turn from the SB exit ramp to EB Clark Avenue. He asked what the truck percentage is on the ramps. OEL did the traffic projections showing 12% trucks on the expressway. Joe said we are proposing double lefts, but do we have additional pavement width to receive this movement? Should we provide 6 lanes through the interchange now so that we won't have to come back and do it when Clark Avenue is widened to 6-lane divided? Angela Alexander said that would require replacing the existing bridge, so Joe abandoned that idea. Joe said to provide a quick bow out to 30 feet of pavement (two 15-foot lanes) on EB Clark Avenue for a few hundred feet to receive the double lefts and then provide an appropriate taper before going under the bridge. Joe said not to show the 6 lane widening, bicycle lanes or sidewalks. Darrell Richardson said a 100-foot taper should be enough.

Program Funds for Right of Way

8. Katie Mullins said that funds should be set up to acquire right of way for this project. Joe Palladi said that this should be programmed with the state paying for right of way since this is a state route. Darrell Richardson asked G&O to generate a square footage of required right of way so that the GDOT right of way office can estimate the cost.

Provide High Type Design for WB Right Turn

9. Danny Gay was concerned about the heavy WB Clark Avenue right turn onto NB freeway entrance ramp. Danny has observed long queues of vehicles, including many trucks, in the right lane approaching this intersection. There is only one right turn lane currently for this movement. Passenger cars will often speed up in the through lanes and cut in front of trucks into the right turn lane leading to disputes between drivers. Joe Palladi discussed this and concluded that this movement should have a higher-type design with a larger turning radius allowing two lanes to make this right turn movement and tapering back to one lane before this entrance ramp merges with the northbound freeway. Increase the radius to 100 or 150 feet.

Right of Protection

10. Joe Palladi suggested protecting the right of way for widening to 6-lane divided all on the north

side of the road down to Turner Field Road. Developers have shown an interest in a parcel in the NW quadrant of the Turner Field/Clark Avenue intersection. Right of way acquisition should address what will be needed for the higher type right turn design (involving acquiring the access rights on the north side from the NB entrance ramp to Turner Field Road), and the right of way ultimately needed for widening to a 6-lane divided section. The Albany Housing Authority owns property on the south side of the road, raising environmental justice issues, so all widening should be done on the north side of the road. Include 4-foot bike lanes and sidewalks in the required right of way. The 6-lane project has not been programmed yet. Joe Palladi asked Ulysses Mitchell to see what he can find out about that future project. Joe said that if the 6-lane project is programmed, we should purchase right of way for a 6-lane divided section with bicycle lanes, sidewalks and extend limited access to Turner Field Road. Andrew Aiello said that OEL needs to know if GDOT will be buying right of way. We can get environmental clearance for a 50 to 60 foot strip with no problem.

Utilities

11. Emory Giddens said the utilities for this project include City of Albany Water, Power and Lights, Georgia Power, and BellSouth. There are gas and water lines under the pavement on the quadrant of the interchange where widening is planned. Should fiber optic cable be included in the cost estimate for ITS?

Eliminate Existing Acceleration Lanes

12. Darrell Richardson said to eliminate acceleration lanes where both the NB and SB exit ramps intersect with Clark Avenue. Make the radius (from the exit ramp right turn lane) tangent with the Clark Avenue north edge of pavement instead of using the existing short acceleration lane.

The above represents our understanding of the items discussed. Please notify me right away of any changes or questions.

Sincerely,
Greenhorne & O'Mara, Inc.
David W. Low
David W. Low, P.E.
Project Manager

Presentation of Concept Plan and Concept Report

Liberty Expressway at Moultrie Road Interchange

1. Project Description from TIP
   Redesign of the NB on-ramp from EB Moultrie Road, and the SB off-ramp onto EB Moultrie Road. $650,000 in long range. Project length: 0.50 mile. 1997 ADT: 2,000 2015 ADT: 2,400

2. Project Limits – Confined to interchange. Problem areas are EB to NB loop ramp and SB to EB loop ramp.

3. Need and Purpose Statement – Ulysses Mitchell, GDOT Office of Planning

4. Design Traffic
   a. OEL provided design traffic for 2004 and 2024. G&O updated projections to 2005 and 2025. G&O did turning movement counts at adjacent intersections with truck terminal and Mock Road for CORSIM analysis.
   b. EB to NB loop ramp 2005 ADT: 3,670 2025 ADT: 5,460
      2025 AM peak hour is 570 vph and PM peak hour is 520.
   c. SB to EB loop ramp 2005 ADT: 2,960 2025 ADT: 4,030
      2025 AM peak hour is 390 vph and PM peak hour is 420.

5. Concept Plan and Concept Report

6. Traffic Issues
   a. Safety – Main goal of this project is to address safety concerns. Correctable accident patterns were identified from 1995-1998 accident data.
      (1) Limited sight distance of the SB exit ramp gore is a problem. There were 5 out-of-control or fixed object accidents on this ramp associated with exiting at too high a rate of speed.
      (2) SB Liberty Expressway weave – 5 out of control or fixed object accidents associated with weaving.
      (3) NB Liberty Expressway weave – 13 fixed object, rear-end or sideswipe accidents associated with weaving. 1 head-on.
      (4) Limited sight distance of the EB exit ramp gore is a problem. Moultrie Road is on a crest vertical curve over Liberty Expressway. There were 5 out-of-control or fixed object accidents on this ramp associated with exiting at too high a rate of speed. 1 head-on.
   b. Capacity
      No capacity constraints in 2025.
   c. Sight distance – gores for SB and EB exit ramps are problems.
   d. Interchange form
      (1) Parclo A – solves sight distance and weaving problems
      (2) Parclo B – solves weaving problems, but not sight distance
      (3) Diamond – LOS is worse for diamond (C or D) than others (B or C)

e. Recommendations
   (1) Parclo A
   (2) Pull EB gore back before crest vertical curve.
   (3) Signalize two new ramp terminals on Moultrie Road
   (4) Cross Marine Corps Canal with a culvert
f. Guide Sign Concept Plan

7. Environmental Issues – Tom Tkacs and Eric Dilts, Greenhorne & O'Mara
   The Ecology Report is complete except for completion of a survey for protected fish and mussels.

8. Peripheral issues
   a. On long range bicycle plan
   b. Adjacent truck terminal and expansion

PROJECT NAME: Liberty Expressway at Moultrie Road
PROJECT DESCRIPTION: Redesign of the northbound on-ramp from eastbound Moultrie Road and the southbound off-ramp onto eastbound Moultrie Road.

PROJECT #: NHS	PROJECT LENGTH (MI): 0.50	COUNTY: Dougherty
P I #: 422570	EXISTING LANES: 1	DOT DISTRICT: 4
TIP #:	PROPOSED LANES: 2	CONG DIST: 2.8
FUNDING CODE: 315	1997 ADT: 2,000 2015 ADT: 2,400	RDC: SWG
FUNDING: NHS-006-2(57)	STATE/US #: SR 3 and SR 133	LOCAL RD #:

COMMENTS/REMARKS:

PROJECT PHASE	$ SOURCE	Long Range			TOTAL
PRELIM. ENGINEERING	Federal/State	$ 13,000			$ 13,000
RIGHT-OF-WAY					$ -
UTILITIES					$ -
CONSTRUCTION	Federal/State	$ 650,000			$ 650,000
PROJECT COST	NA	$ 663,000	$ -	$ -	$ 663,000
FEDERAL COST	NA	$ 530,400	$ -	$ -	$ 530,400
STATE COST	NA	$ 132,600	$ -	$ -	$ 132,600
LOCAL COST	NA				$ -

PROJECT LOCATION

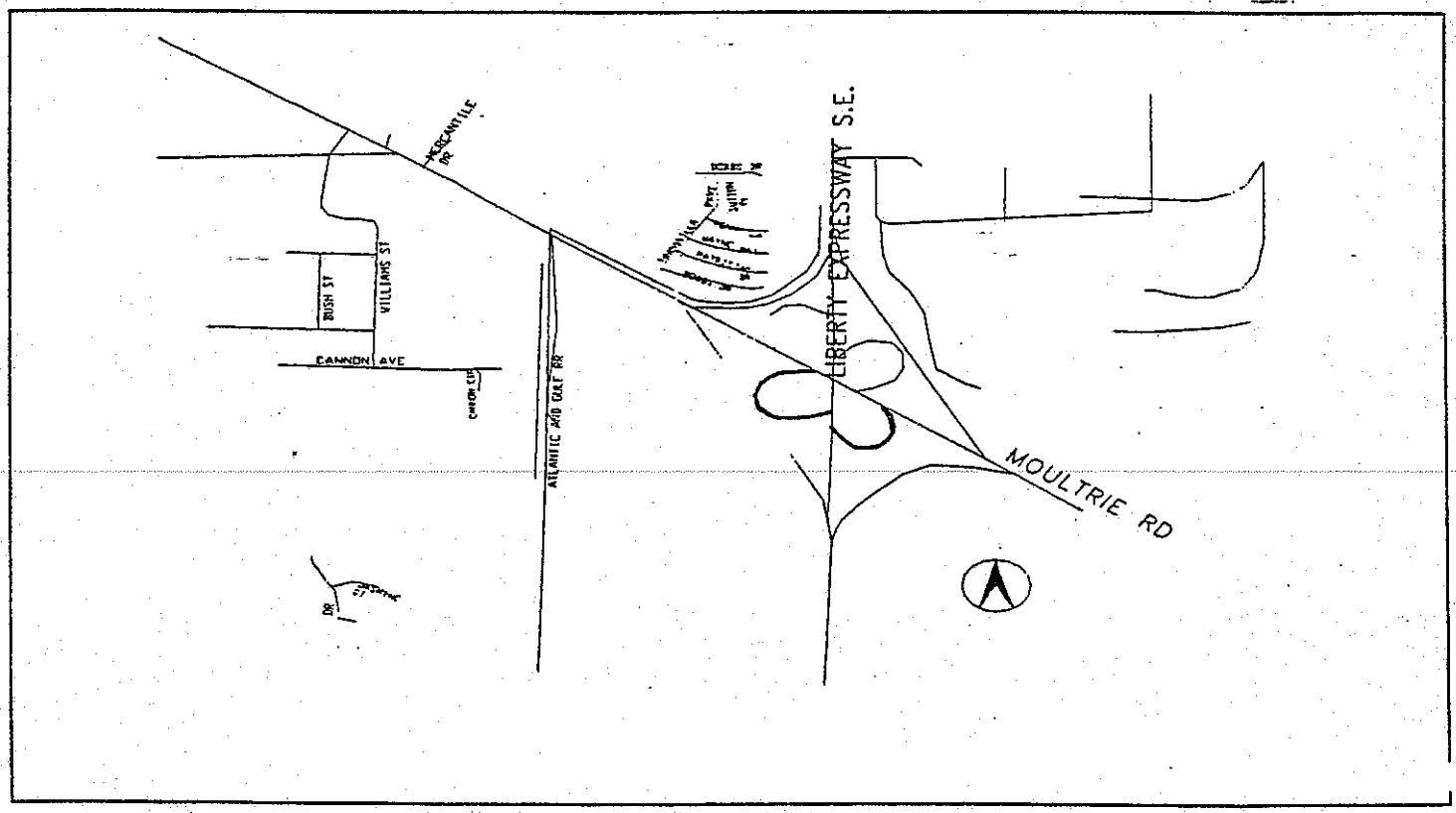

SHEET 1 OF 3

GEORGIA DEPARTMENT OF TRANSPORTATION
OFFICE OF ENVIRONMENT/LOCATION

DOUGHERTY COUNTY
CITY OF ALBANY

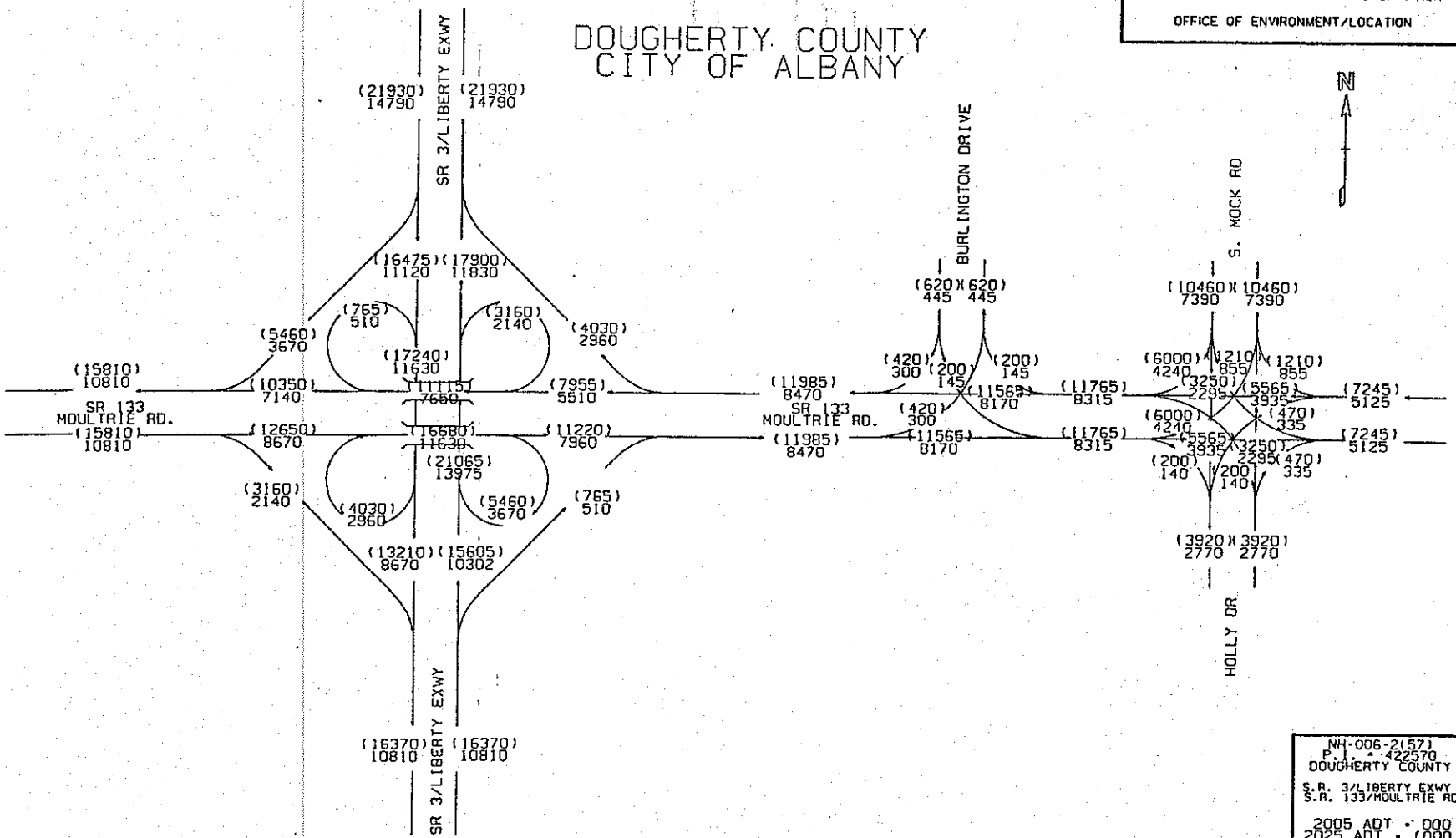

NH-006-2(57)
P.I. # 422570
DOUGHERTY COUNTY

S.R. 3/LIBERTY EXWY @
S.R. 133/MOULTRIE RD.

2005 ADT = 000
2025 ADT = (000)
24 HOUR T. = 14%
S.U. = 4%
COMB. = 10%

revised@g&o 07/00

AFE
05/00

...\0094\wo007\dgn\422570trf.dgn Sep. 26, 2000 08:43:03

SHEET 2 OF 3

GEORGIA DEPARTMENT OF TRANSPORTATION
OFFICE OF ENVIRONMENT/LOCATION

DOUGHERTY COUNTY
CITY OF ALBANY

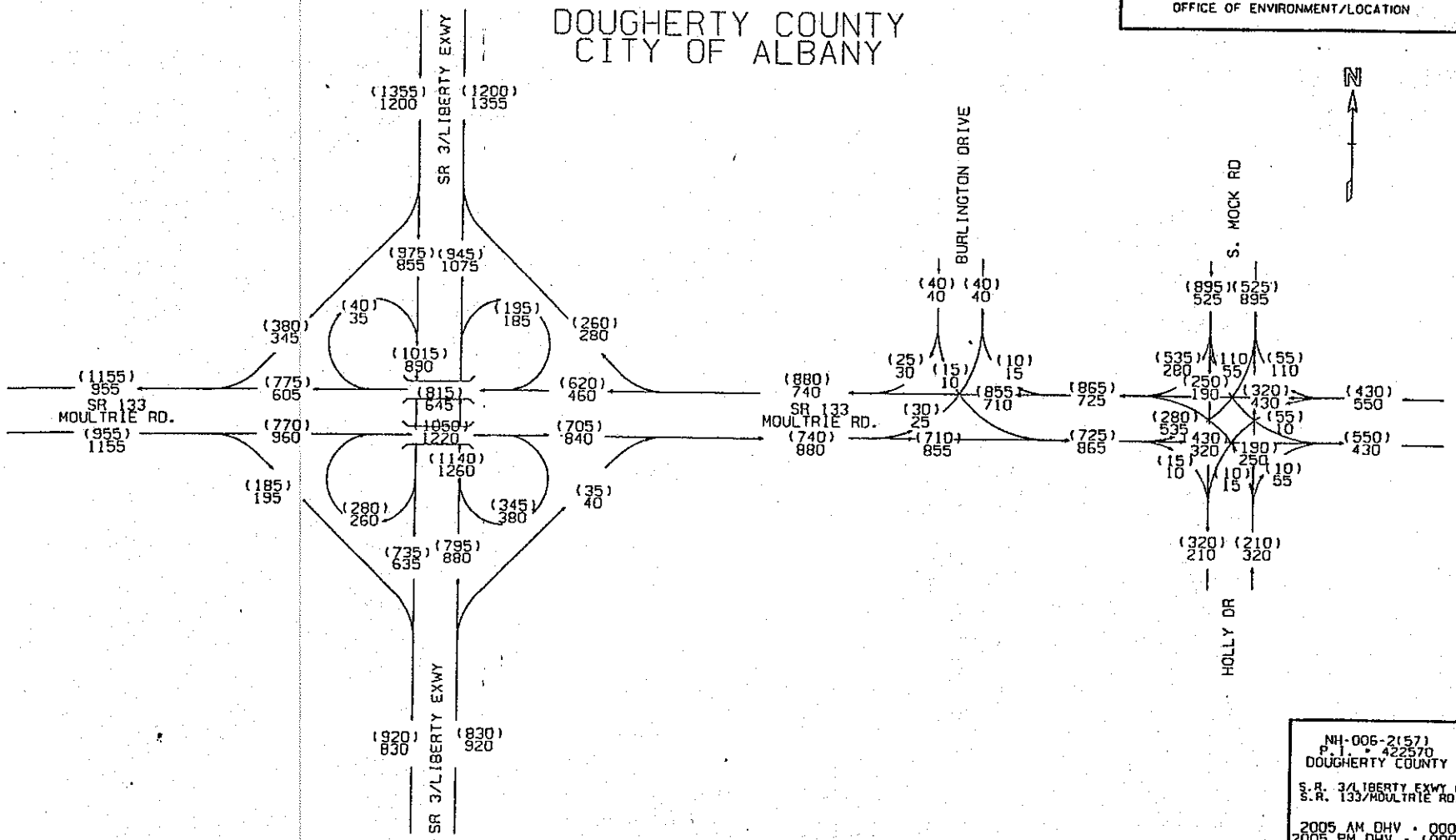

NH-006-2(57)
P.I. # 422570
DOUGHERTY COUNTY

S.R. 3/LIBERTY EXWY @
S.R. 133/MOULTRIE RD.

2005 AM DHV = 000
2005 PM DHV = (000)
T = 12%

revised@5 07/00

AFE
05/00

...\0094\wo007\dgn\422570trf.dgn Sep. 26, 2000 08:43:23

SHEET 3 OF 3

GEORGIA DEPARTMENT OF TRANSPORTATION
OFFICE OF ENVIRONMENT/LOCATION

DOUGHERTY COUNTY
CITY OF ALBANY

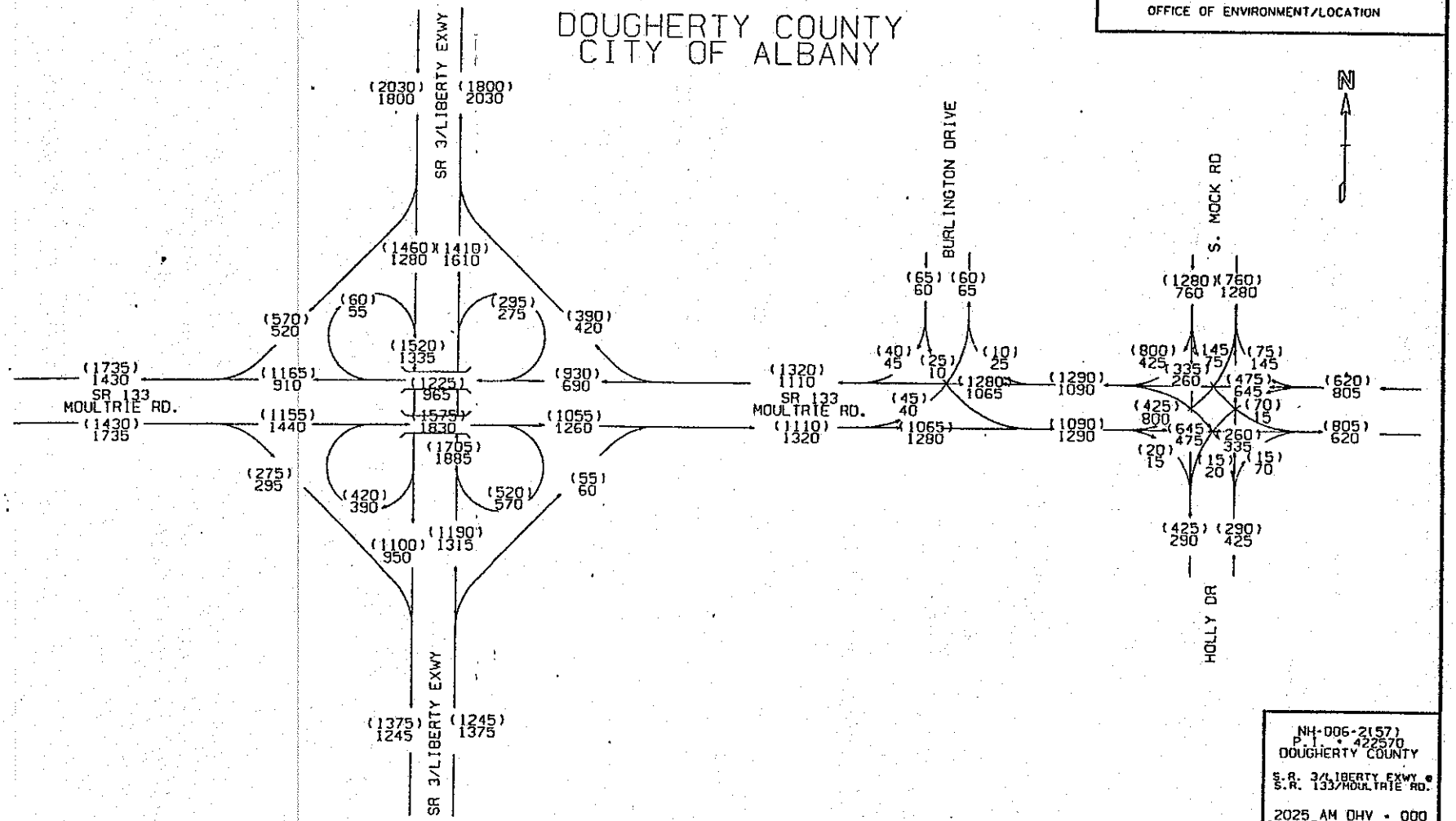

NH-006-2(57)
P.I. # 422570
DOUGHERTY COUNTY

S.R. 3/LIBERTY EXWY @
S.R. 133/MOULTRIE RD.

2025 AM DHV = 000
2025 PM DHV = (000)
T. = 12%

revised@Be 07/00

AFE
05/00

...\0094\wo007\dgn\422570trf.dgn Sep. 26, 2000 08:43:47

DEPARTMENT OF TRANSPORTATION
STATE OF GEORGIA

OFFICE OF URBAN DESIGN
PROJECT CONCEPT REPORT SIGN-OFF FORM

SR 3/Liberty Expressway at
SR 133/Moultrie Road Interchange

NH-006-2(57)
Dougherty County
P.I. No. 422570

U.S. Route Number: N/A
State Route Number: 3

Date of Report: May 21, 2001
Project Manager: Darrell Richardson

(See attached location map)

RECOMMENDATION FOR APPROVAL:

5/23/01
DATE — STATE URBAN DESIGN ENGINEEER

DATE — STATE TRANSPORTATION PROGRAMMING ENGINEER

DATE — STATE ENVIRONMENTAL / LOCATION ENGINEER

DATE — STATE TRAFFIC OPERATIONS ENGINEER

DATE — DISTRICT ENGINEER

DATE — PROJECT REVIEW ENGINEER

5/31/01
DATE — BRIDGE DESIGN ENGINEER

This project concept is contained in the Regional Transportation Improvement Program (RTIP) and/or in the State Transportation Improvement Program (STIP). The concept as presented herein and submitted for approval is consistent with that which is included in the RTIP and/or the STIP.

DATE — STATE TRANSPORTATION PLANNING ADMINISTRATOR

DEPARTMENT OF TRANSPORTATION
STATE OF GEORGIA

OFFICE OF URBAN DESIGN
PROJECT CONCEPT REPORT SIGN-OFF FORM

SR 3/Liberty Expressway at
Clark Avenue Interchange

NH-006-2(56)
Dougherty County
P.I. No. 422560

U.S. Route Number: N/A
State Route Number: 3

Date of Report: May 21, 2001
Project Manager: Darrell Richardson

(See attached location map)

RECOMMENDATION FOR APPROVAL:

5/23/01
DATE

STATE URBAN DESIGN ENGINEEER

6/01/01
DATE

STATE TRANSPORTATION PROGRAMMING ENGINEER

DATE

STATE ENVIRONMENTAL / LOCATION ENGINEER

DATE

STATE TRAFFIC OPERATIONS ENGINEER

DATE

DISTRICT ENGINEER

DATE

PROJECT REVIEW ENGINEER

DATE

BRIDGE DESIGN ENGINEER

This project concept is contained in the Regional Transportation Improvement Program (RTIP) and/or in the State Transportation Improvement Program (STIP). The concept as presented herein and submitted for approval is consistent with that which is included in the RTIP and/or the STIP.

DATE

STATE TRANSPORTATION PLANNING ADMINISTRATOR

DEPARTMENT OF TRANSPORTATION
STATE OF GEORGIA

OFFICE OF URBAN DESIGN
PROJECT CONCEPT REPORT SIGN-OFF FORM

SR 3/Liberty Expressway at
Clark Avenue Interchange

NH-006-2(56)
Dougherty County
P.I. No. 422560

U.S. Route Number: N/A
State Route Number: 3

Date of Report: May 21, 2001
Project Manager: Darrell Richardson

(See attached location map)

RECOMMENDATION FOR APPROVAL:

5/23/01 — DATE — STATE URBAN DESIGN ENGINEEER

DATE — STATE TRANSPORTATION PROGRAMMING ENGINEER

DATE — STATE ENVIRONMENTAL / LOCATION ENGINEER

DATE — STATE TRAFFIC OPERATIONS ENGINEER

6-4-01 — DATE — DISTRICT ENGINEER

DATE — PROJECT REVIEW ENGINEER

DATE — BRIDGE DESIGN ENGINEER

This project concept is contained in the Regional Transportation Improvement Program (RTIP) and/or in the State Transportation Improvement Program (STIP). The concept as presented herein and submitted for approval is consistent with that which is included in the RTIP and/or the STIP.

DATE — STATE TRANSPORTATION PLANNING ADMINISTRATOR

DEPARTMENT OF TRANSPORTATION
STATE OF GEORGIA

OFFICE OF URBAN DESIGN
PROJECT CONCEPT REPORT SIGN-OFF FORM

SR 3/Liberty Expressway at
SR 133/Moultrie Road Interchange

NH-006-2(57)
Dougherty County
P.I. No. 422570

U.S. Route Number: N/A
State Route Number: 3

Date of Report: May 21, 2001
Project Manager: Darrell Richardson

(See attached location map)

RECOMMENDATION FOR APPROVAL:

5/23/01
DATE — STATE URBAN DESIGN ENGINEEER

DATE — STATE TRANSPORTATION PROGRAMMING ENGINEER

DATE — STATE ENVIRONMENTAL / LOCATION ENGINEER

DATE — STATE TRAFFIC OPERATIONS ENGINEER

6-4-01
DATE — DISTRICT ENGINEER

DATE — PROJECT REVIEW ENGINEER

DATE — BRIDGE DESIGN ENGINEER

This project concept is contained in the Regional Transportation Improvement Program (RTIP) and/or in the State Transportation Improvement Program (STIP). The concept as presented herein and submitted for approval is consistent with that which is included in the RTIP and/or the STIP.

DATE — STATE TRANSPORTATION PLANNING ADMINISTRATOR

DEPARTMENT OF TRANSPORTATION
STATE OF GEORGIA

OFFICE OF URBAN DESIGN
PROJECT CONCEPT REPORT SIGN-OFF FORM

SR 3/Liberty Expressway at
SR 133/Moultrie Road Interchange

NH-006-2(57)
Dougherty County
P.I. No. 422570

U.S. Route Number: N/A
State Route Number: 3

Date of Report: May 21, 2001
Project Manager: Darrell Richardson

(See attached location map)

RECOMMENDATION FOR APPROVAL:

5/23/01
DATE — STATE URBAN DESIGN ENGINEEER

DATE — STATE TRANSPORTATION PROGRAMMING ENGINEER

DATE — STATE ENVIRONMENTAL / LOCATION ENGINEER

DATE — STATE TRAFFIC OPERATIONS ENGINEER

DATE — DISTRICT ENGINEER

DATE — PROJECT REVIEW ENGINEER

DATE — BRIDGE DESIGN ENGINEER

This project concept is contained in the Regional Transportation Improvement Program (RTIP) and/or in the State Transportation Improvement Program (STIP). The concept as presented herein and submitted for approval is consistent with that which is included in the RTIP and/or the STIP.

6-7-01
DATE — STATE TRANSPORTATION PLANNING ADMINISTRATOR

Department of Transportation
State of Georgia

INTERDEPARTMENTAL CORRESPONDENCE

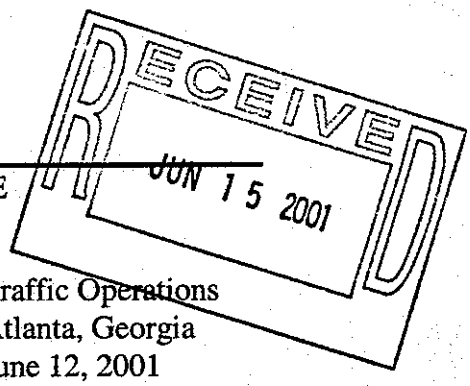

File: NH-006-2 (57) / Dougherty County
P.I. No. 422570

Office: Traffic Operations
Atlanta, Georgia
Date: June 12, 2001

From: M.G. Waters, III, P.E., State Traffic Operations Engineer

To: Wayne Hutto, Assistant Director of Preconstruction

Subject: Project Concept Report Review

We have reviewed the above referenced concept report for the SR 3/Liberty Expressway at SR 133/Moultrie Road interchange improvements in Dougherty County.

The interchange improvements will convert the existing "Cloverleaf" interchange to a "Parclo A" interchange by removing the northeast and southwest loop ramps. Left turn lanes will be added to the southbound and northbound SR 3/Liberty Expressway exit ramps. The lengths of the deceleration lanes to the remaining loop ramps entering SR 3/Liberty Expressway will be increased. These improvements will include interconnected signals installed at the ramps.

We believe this concept will improve safety and traffic operations within this area, therefore find this report satisfactory for approval.

MGW/BM

Attachment (signature page)

Cc: Harvey Keepler, Environmental Location
Joseph Palladi, State Urban Design Engineer
David Mulling, Engineering Services, w/ attachment
Marta Rosen, Office of Planning
David Crim, District Engineer – Tifton
Attention: Brent Thomas, District Traffic Engineer
Chuck Hasty, TMC
General Files

DEPARTMENT OF TRANSPORTATION
STATE OF GEORGIA

OFFICE OF URBAN DESIGN
PROJECT CONCEPT REPORT SIGN-OFF FORM

SR 3/Liberty Expressway at
SR 133/Moultrie Road Interchange

NH-006-2(57)
Dougherty County
P.I. No. 422570

U.S. Route Number: N/A
State Route Number: 3

Date of Report: May 21, 2001
Project Manager: Darrell Richardson

(See attached location map)

RECOMMENDATION FOR APPROVAL:

5/23/01
DATE — STATE URBAN DESIGN ENGINEEER

DATE — STATE TRANSPORTATION PROGRAMMING ENGINEER

DATE — STATE ENVIRONMENTAL / LOCATION ENGINEER

06/13/01
DATE — STATE TRAFFIC OPERATIONS ENGINEER

DATE — DISTRICT ENGINEER

DATE — PROJECT REVIEW ENGINEER

DATE — BRIDGE DESIGN ENGINEER

This project concept is contained in the Regional Transportation Improvement Program (RTIP) and/or in the State Transportation Improvement Program (STIP). The concept as presented herein and submitted for approval is consistent with that which is included in the RTIP and/or the STIP.

DATE — STATE TRANSPORTATION PLANNING ADMINISTRATOR

DEPARTMENT OF TRANSPORTATION
STATE OF GEORGIA

OFFICE OF URBAN DESIGN
PROJECT CONCEPT REPORT SIGN-OFF FORM

SR 3/Liberty Expressway at
SR 133/Moultrie Road Interchange

NH-006-2(57)
Dougherty County
P.I. No. 422570

U.S. Route Number: N/A
State Route Number: 3

Date of Report: May 21, 2001
Project Manager: Darrell Richardson

(See attached location map)

RECOMMENDATION FOR APPROVAL:

5/23/01
DATE — STATE URBAN DESIGN ENGINEEER

DATE — STATE TRANSPORTATION PROGRAMMING ENGINEER

DATE — STATE ENVIRONMENTAL / LOCATION ENGINEER

DATE — STATE TRAFFIC OPERATIONS ENGINEER

DATE — DISTRICT ENGINEER

6/13/01
DATE — PROJECT REVIEW ENGINEER

DATE — BRIDGE DESIGN ENGINEER

This project concept is contained in the Regional Transportation Improvement Program (RTIP) and/or in the State Transportation Improvement Program (STIP). The concept as presented herein and submitted for approval is consistent with that which is included in the RTIP and/or the STIP.

DATE — STATE TRANSPORTATION PLANNING ADMINISTRATOR

DEPARTMENT OF TRANSPORTATION
STATE OF GEORGIA

OFFICE OF URBAN DESIGN
PROJECT CONCEPT REPORT SIGN-OFF FORM

SR 3/Liberty Expressway at
SR 133/Moultrie Road Interchange

NH-006-2(57)
Dougherty County
P.I. No. 422570

U.S. Route Number: N/A
State Route Number: 3

Date of Report: May 21, 2001
Project Manager: Darrell Richardson

(See attached location map)

RECOMMENDATION FOR APPROVAL:

5/23/01 — DATE — STATE URBAN DESIGN ENGINEER

6/4/01 — DATE — STATE TRANSPORTATION PROGRAMMING ENGINEER

_____ DATE — STATE ENVIRONMENTAL / LOCATION ENGINEER

_____ DATE — STATE TRAFFIC OPERATIONS ENGINEER

_____ DATE — DISTRICT ENGINEER

_____ DATE — PROJECT REVIEW ENGINEER

_____ DATE — BRIDGE DESIGN ENGINEER

This project concept is contained in the Regional Transportation Improvement Program (RTIP) and/or in the State Transportation Improvement Program (STIP). The concept as presented herein and submitted for approval is consistent with that which is included in the RTIP and/or the STIP.

_____ DATE — STATE TRANSPORTATION PLANNING ADMINISTRATOR