Georgia Department of Transportation

Widening and Reconstruction of Forest Hill Road

Project No. STP-3213(1) and STP-3213(3)

P.I. No. 350520 and 351130/351135

Bibb County, Georgia

Value Engineering Study Report

Concept Design Submittal

February 2009

Designer:

Stantec Consulting

Value Engineering Consultant

Lewis & Zimmerman Associates, Inc.

Lewis & Zimmerman Associates, Inc.
Taking the Chance out of Change
1000 Town Center, Suite 180-27
Tacoma, Washington 98422
Mobile: 253/229-7703
dahamilton@lza.com • www.lza.com

March 2, 2009

Ms. Lisa Myers, Design Review Engineering Manager
State of Georgia
Department of Transportation
600 West Peachtree Street, 5th Floor
Atlanta, Georgia 30308

re: **Widening and Reconstruction of Forest Hill Road**
Project No. STP-3213(3) and STP-3213(1) - Bibb County, Georgia
Value Engineering Study Report

Dear Ms. Myers:

Lewis & Zimmerman Associates, Inc. is pleased to present three hard copies and one CD of the value engineering study report on the referenced project. We appreciate your assistance in the conduct of this study, and hope that these VE recommendations will provide a variety of improvements that will enhance the true value and constructability of the Forest Hill Road Project, Bibb County, Georgia. Some of the more interesting alternatives optimize the section, drainage, and structures along the alignment. These alternatives provide comparable performance at a lower total cost to the project.

Two alternatives provide for improved project value by recommending a 4-lane section be constructed in lieu of the current 3-lane section. Although slightly higher in capital cost, these alternatives offer superior performance with respect to Level of Service and overall roadway capacity.

We appreciate the excellent participation of the GDOT staff and Stantec design team throughout the conduct of this study. Please feel free to contact David Hamilton at 253/229-7701 if you have any questions as you review this report.

Sincerely,

LEWIS & ZIMMERMAN ASSOCIATES, INC.

David A. Hamilton, P.E., CVS, CCE, LEED™ AP
Vice President/VE Team Leader
Certified Value Specialist No. 910506 - Life

Enclosures

TABLE OF CONTENTS

EXECUTIVE SUMMARY

Introduction	1
Project Description	1
Results	2
Summary of Potential Cost Savings	3

STUDY RESULTS

General	7
Key Issues	8
Study Objectives	8
Results of the Study	8
Evaluation of Alternatives	10
Summary of Potential Cost Savings	11

PROJECT DESCRIPTION

Purpose and Need	111

VALUE ANALYSIS AND CONCLUSIONS

General	113
Preparation Effort	113
Value Engineering Workshop Effort	115
Post-Workshop Effort	118
Value Engineering Study Participants	119
Value Engineering Study Agenda	121
Economic Data	124
Cost Model	125
Function Analysis	128
Creative Idea Listing and Evaluation of Ideas	130

EXECUTIVE SUMMARY

INTRODUCTION

This value engineering (VE) study summarizes the events and results of the VE study conducted by Lewis & Zimmerman Associates, Inc. (LZA), for the Georgia Department of Transportation (GDOT). The subject of the study was the Concept Report Submittal on the Widening and Reconstruction of Forest Hill Road, STP-3213(1) and STP-3213(3), P.I. No. 350520 and No. 351130/351135, respectively, located in Bibb County, Georgia. The project is being designed for by Stantec. and will greatly improve the Level of Service (LOS) along this busy corridor in the City of Macon.

The VE study was conducted February 9 - 12, 2009 at the GDOT Central Office, located in Atlanta, Georgia and was conducted under the value engineering guidelines of GDOT, FHWA, and SAVE International (The Value Society). VE team members consisted of a Certified Value Specialist from LZA and design and construction professionals from local highway engineering consultants.

Decision Making

Value engineering studies by their nature identify alternate design schemes, construction methods, and project delivery options, which if accepted by the project users and design team, may impact the final scope, design documents, budget, schedule, functionality, and appearance of the Forest Hill Road Project. The task of the VE team is to identify possible solutions, whereas the task of the GDOT and the Stantec design team is to choose the most favorable of the VE alternatives for incorporation into the project.

Decisions are needed on each of the alternatives presented in this report and personnel from GDOT are totally empowered to accept, reject, or modify these alternatives. Value engineering by its nature searches for new, unique, and different methods to provide for the needed project functions at the lowest total life cycle cost. The blending of these new and sometimes challenging ideas with established procedures, norms, and protocol is the responsibility of the project team. The project team should feel free to accept alternatives which support its construction program and similarly reject alternatives which do not optimize its goals for the Forest Hill Road corridor.

PROJECT DESCRIPTION

Forest Hill Road is classified as an urban minor arterial that services the surrounding principal arterial system by providing access to Vineville Avenue (US 41/SR 19) as well as Northside Drive and Riverside Drive (US 23/SR 87) via Wimbish Road. Riverside Drive and Vineville Avenue are urban principal arterials that provide primary access through Macon and connect to I-75. Forest Hill Road also provides access to adjacent commercial and residential areas along the project corridor. The proposed modifications to Forest Hill Road would improve north-south mobility through Macon, while also providing safer access to the surrounding community through turn lanes and median

openings at major intersections. The project consists of two design segments with a total length of slightly less than 3 miles.

Forsyth Road/US 41 to Wimbish Road – 4-Lane Segment (Metric Units) (ECC = $6.42M)

This project widens Forest Hill Road from a two-lane rural section to a four-lane section from Forsyth Road/Vineville Avenue (US41/SR 19) to Wimbish Road (CS 997). The purpose of this project is to accommodate additional capacity while also improving the safety and operational efficiency of Forest Hill Road throughout the length of the project. The total length of this segment is 1.21 km. The current approved concept widens Forest Hill Road from a two-lane rural section to a four-lane urban section with a 6.0 meter raised landscaped median, including two 3.3 meter travel lanes, and 3.6 meter shoulders with 1.5 meter sidewalks adjacent to the back of the curb, in both directions. Auxiliary lanes are proposed at intersections as required to include tapering at each end to meet the existing typical section. The project is being designed in metric units for a design speed of 70 km/h.

Wimbish Road to Northside Drive/ 3-Lane Segment (ECC = $8.0M)

This segment widens Forest Hill Raod (CR 723) from a two-lane rural section to a three-lane urban section from a relocated Wimbish Road (CS 997) to approximately 200 meters south of Northside Drive (CR 79) for an approximate length of 1.81 miles. . The project also replaces the bridge culvert over Sabbath Creek (also known as Savage Creek). The purpose of the project is to accommodate additional capacity while also improving the safety and operational efficiency of Forest Hill Road throughout the length of this segment.
The project is located 90% in the City of Macon and 10% in Bibb County. The design concept widens Forest Hill Road from a two-lane rural section to a three-lane urban section with a 14 ft two-way left-turn lane, two 12 ft travel lanes, 12 ft shoulders in both directions, 5 ft sidewalks on both sides, and a 2 ft grass strip.

RESULTS

The VE team explored 29 ideas that could enhance the value of the project and address the concerns of GDOT. Evaluation and research of the ideas yielded 19 technically feasible alternatives with definable cost implications. Each of the alternatives are summarized on the table entitled Summary of Potential Cost Savings. Note that the alternatives were developed independent of each other and thus the total potential cost savings achievable is dependent on the combination of alternatives selected for implementation. A discussion of some of the more salient alternatives and design suggestions developed by the VE team follows.

The VE team searched for ways to optimize the design from a traffic perspective and looked for schemes to reduce capital cost and right-of-way expenditures. The most significant finding of the study was the identification of two alternatives which would expand the Wimbish Road to Northside Drive segment from 3-lanes to an optimized 4-lane section at a modest increase in capital cost. The benefit of this approach is that a safer section with a greater capacity is provided.

Cost savings are possible by reducing the lane width from 12 ft to 11 ft and using precast concrete mechanically stabilized earth (MSE) walls in lieu of cast-in-place concrete retaining walls. Other

alternatives focused on improvements to the drainage system, box culverts, and optimizations to the pavement and slope sections through the use of geogrid fabric.

The Study Results section of the report provides additional support information for each alternative. Note that all of the alternatives were developed independent of each other. Therefore, some are inter-related or mutually exclusive and the total cost savings achievable is dependent on the combination of ideas selected for final implementation.

SUMMARY OF POTENTIAL COST SAVINGS

PROJECT: **WIDENING AND RECONSTRUCTION OF FOREST HILL ROAD**

Project No. STP-3213(3) and STP-3213(1) - Bibb County, Georgia

ALT. NO.	DESCRIPTION	ORIGINAL COST	ALTERNATIVE COST	INITIAL COST SAVINGS	RECURRING COST SAVINGS	TOTAL PW LCC SAVINGS
	Forsyth Road/US 41 to Wimbish Road – 4-Lane Segment (Metric Units)					
ALIGNMENT (AF)						
AF-2	Use High Density Polyethylene Pipe (HDPE) pipe in lieu of reinforced concrete pipe (RCP) for urban drainage in non-traffic areas longitudinal to roadway. Retain RCP for cross traffic areas.	$171,936	$125,196	$46,740		$46,740
AF-4	Relocate the drainage outfall at STA 6+015 LT away from the existing building (Parcel #44) to reduce the potential for damage to the building	$5,018	$5,602	($584)		($584)
SECTION (SF)						
SF-2	Reduce the median from 6 meters wide to 5.5 meters wide and reduce the shoulders from 3.6 meters to 3.0 meters	$404,266		$404,266		$404,266
SF-3	Use 24-inch wide curb and gutter in lieu of 30-inch	$414,334	$323,408	$90,926		$90,926
SF-5	Use mechanically stabilized earth (MSE) walls in lieu of cast-in-place (CIP) concrete retaining walls	$1,847,619	$1,248,648	$598,971		$598,971
SF-7	Use 3:1 front slopes in lieu of of 4:1 at north side of Wimbish and 2:1 back slopes. Eliminate the wall at STA 14+080.	$15,533		$15,533		$15,533
BRIDGE (BF)						
BF-1	Move the retaining wall at Charter Blvd. closer to the sidewalk to reduce right-of-way impacts	$143,195	$156,722	($13,527)		($13,527)
BF-2	Add wall at North Minster and Wimbish to reduce the fill quantities and right-of-way impacts	$157,810	$253,169	($95,359)		($95,359)

SUMMARY OF POTENTIAL COST SAVINGS

PROJECT: **WIDENING AND RECONSTRUCTION OF FOREST HILL ROAD**

Project No. STP-3213(3) and STP-3213(1) - Bibb County, Georgia

ALT. NO.	DESCRIPTION	ORIGINAL COST	ALTERNATIVE COST	INITIAL COST SAVINGS	RECURRING COST SAVINGS	TOTAL PW LCC SAVINGS
	Wimbish Road to Northside Drive/ 3-Lane Segment					
ALIGNMENT (AW)						
AW-4	Use High Density Polyethylene Pipe (HDPE) pipe in lieu of concrete RCP for urban drainage in non-traffic areas longitudinal to roadway. Retain RCP for cross traffic areas	$803,083	$518,198	$284,885		$284,885
AW-5	Use Geogrid fabric and reduce the amount of base material from xxxxx to xxxxx	$184,671		$184,671		$184,671
AW-6	Increase the side slopes from 2:1 to 1:1 by using Tensar fabric and eliminate Wall #2	$188,887	$62,389	$126,498		$126,498
SECTION (SW)						
SW-2	Use 24-inch wide curb and gutter in lieu of 30-inch	$383,087	$279,075	$104,012		$104,012
SW-3	Use MSE walls in lieu of cast in place (CIP) concrete retaining walls	$624,679	$421,351	$203,328		$203,328
SW-4	Use 11-ft-wide through lanes in lieu of 12 ft lanes	$111,868		$111,868		$111,868
SW-5	Build a reduced four lane 11 ft lanes section with 11-ft-wide lanes in lieu of the three lane section with 12-ft-wide lanes to maximize cost, increase traffic capacity, and improve LOS		$1,442,111	($1,442,111)		($1,442,111)
SW-5b	Widen Forest Hill Rd. by building a 4-lane section with 12-ft-wide lanes and reduced shoulder width (9.5 ft)		$2,053,142	($2,053,142)		($2,053,142)
SW-6	Replace the retaining wall barrier with guardrail	$62,871	$35,605	$27,266		$27,266
SW-7	Reduce the quantity of drain pipe by using more cross drains and eliminating one of the two longitudinal drains	$173,891	$43,528	$130,363		$130,363

SUMMARY OF POTENTIAL COST SAVINGS

PROJECT: **WIDENING AND RECONSTRUCTION OF FOREST HILL ROAD**

Project No. STP-3213(3) and STP-3213(1) - Bibb County, Georgia

ALT. NO.	DESCRIPTION	ORIGINAL COST	ALTERNATIVE COST	INITIAL COST SAVINGS	RECURRING COST SAVINGS	TOTAL PW LCC SAVINGS
	Wimbish Road to Northside Drive/ 3-Lane Segment					
BRIDGE/STRUCTURES (BW)						
BW-1	Use a conspan bridge in lieu of a box culvert	$442,766	$345,296	$97,470		$97,470
BW-2	Straighten out Retaining Wall #3 and the driveway at STA 45+50 to improve constructability and potentially reduce cost	$74,806	$68,571	$6,235		$6,235

STUDY RESULTS

GENERAL

The results of this value engineering study conducted on the Widening and Reconstruction of Forest Hill Road represent the benefits that can be realized by GDOT and the patrons that use this busy corridor in Macon, GA.

During the study, many ideas for potential value enhancement were conceived and evaluated by the team for technical merit, applicability to the project, implementability considering the project's status, and the ability to meet the owner's project value objectives. Research performed on those ideas considered to have potential to enhance the value of the project resulted in the development of individual alternatives identifying specific changes to the project as a whole, or individual elements that comprise the project. For each alternative developed, the following information is provided:

- A summary of the original design;
- A description of the proposed change to the project;
- Sketches and design calculations, if appropriate;
- A capital cost comparison and life cycle discounted present worth cost comparison of the alternative and original design (where appropriate);
- A descriptive evaluation of the advantages and disadvantages of selecting the alternative; and
- A brief narrative to compare the original design and the proposed change and provide a rationale for implementing the change into the project.

The capital cost comparisons used unit quantities contained in the project cost estimate prepared by the designers or its subconsultant, whenever possible. If unit quantities were not available, published databases, such as the one produced by the RS Means Company, or team member or owner databases were consulted. A composite markup of 10%, as described in the Value Analysis and Conclusions section of the report, was used to generate an all-inclusive project cost for the construction items being compared.

Each alternative developed is identified with an alternative number (Alt. No.) to track through the value analysis process and thus facilitate referencing among the Creative Idea Listing and Evaluation worksheets, the alternatives, and the Summary of Potential Cost Savings table. The Alt. No. includes a prefix that refers to a major project design element listed below:

PROJECT ELEMENT	PREFIX
(Wimbish to Northside – 3 Lane Section)	
Alignment	AW
Section	SW
Bridge Structures/Walls	BW

(Forsyth Road/US 41 to Wimbish - 4-Lane Section)	
Alignment	AF
Section	SF
Bridge Structures/Walls	BF

Summaries of the alternatives are provided on the Summary of Potential Cost Savings tables. The tables are divided into design elements and are used to divide the results section. The complete documentation of the developed alternatives and design suggestions follows each of the Summary of Potential Cost Savings tables.

KEY ISSUES

During the design presentation several issues were identified as being key drivers in the project's design, including right-of-way constraints, drainage issues, and the sizable investment required for retaining walls. It was also noted that 4:1 side slopes are used in some locations, placing a heavy demand for new right-of-way. Since the truck traffic percentage is quite low in this area, reducing the lane width from 12-ft-wide to 11-ft-wide was a topic for conversation by the VE team. The location of a number of the retaining structures was also a concern, since several locations required substantial fills with impacts on adjacent property owners.

STUDY OBJECTIVES

The key objectives of the project as described by the design team are to improve the Level of Service, reduce the number of accidents in the corridor, protect numerous historical properties, and minimize the more than $9.9M in right-of-way expense. The challenge to the VE team then was the optimization of these two design segments on Forests Hill Road. The secondary goal of the VE team was to identify materials and methods to optimize the pavement section, reduce right-of-way takes needed for side slopes, and simplify the drainage system.

Project Constraints

Discussions held during the VE study evolved around several key constraints that must be incorporated in the design:

- The proposed alignments in the two sections are generally considered fixed due to development along the corridor
- The profile in most locations will follow the existing grade, however, some total reconstruction will be required
- Traffic signals are needed at four intersections along the alignment

RESULTS OF THE STUDY

Research of the ideas identified as having potential for enhancing the value of the project resulted in the development of 19 alternatives for consideration by the GDOT and designer. These alternatives address the key issues described above, specifically the overall capital cost of the road, amount of project right-of-way, and the extent of storm drainage facilities. The narrative below highlights the more important findings of the VE team.

Wimbish to Northside – 3 Lane Section

Alignment (AW)

- To control the cost of the drainage system, it is recommended that High Density Polyethylene Pipe (HDPE) be used in lieu of the more standard reinforced concrete pipe. HDPE is widely used throughout the country, has acceptable load carrying characteristics, is impervious to most chemicals, and has a long proven track record. Cost savings approaching $50,000 could be achieved if HDPE pipe is used even on a limited basis along the shoulders of the road. Concrete pipe, if deemed mandatory for load carrying capabilities could be retained for pipes crossing the travel lanes.
- Major cost savings can also be achieved through the use of Geogrid fabric in the roadway section. Computer simulations by the manufacturer reveal that a substantial cost savings in the range of $190,000 can be achieved by reducing the amount of base material required for the section.
- Similarly, cost savings in right-of-way approaching $125,000 could be realized by using Tensar fabric to steepen the side slopes from 2:1 to 1:1.

Section (SW)

- Since this alignment requires a substantial amount of retaining walls, it would be appropriate to consider the use of precast mechanically stabilized earth (MSE) walls in lieu of the more traditional cast-in-place concrete walls. Savings in excess of $200,000 are anticipated through the use of MSE walls.
- Since the truck volumes along this corridor are relatively low, less than 2%, reducing the lane width from 12 ft to 11 ft should be considered both for savings in construction cost and required right-of-way. The total savings by adjusting the lane width would exceed $100,000.
- The current drainage design includes a drain on both sides of the street. This duplicity could be eliminated by running periodic cross-drains to a single trunk sewer. Simplifying the design like this could save more than $130,000.
- Improving project value is always a goal for the VE team and attention was paid to maximizing the value of each dollar spent on this project. Value in terms of roadway capacity and Level of Service could be maximized by changing the design from a 3-lane section to a 4-lane section. A streamlined 4-lane section could be built within the right-of-way for a modest cost increase of between $1.4 and $2.0M, depending upon lane widths. These may be dollars well invested due to the extra capacity achieved by the wider section and offer good long term capacity for the corridor.

Forsyth Road/US 41 to Wimbish - 4-Lane Section

Alignment (AF)

- As noted above, the use of HDPE pipe should be considered for both the 3-lane section and the 4-lane section. Savings on the 4-lane section alone approaches $50,000.

Section (SF)

- Similar to the 3-lane section, the use of precast MSE walls could save an estimated $600,000 compared to the cost of traditional cast-in-place concrete walls.
- Shoulder and median widths could be modified on this section also because of the relatively low truck volumes. The shoulders could be reduced from 3.6 meters to 3.0 meters, and the median reduced from 6 meters to 5.5 meters. Savings in excess of $400,000 appears quite feasible with this change.

EVALUATION OF ALTERNATIVES AND DESIGN SUGGESTIONS

When reviewing the study results, the reader should consider each part of an alternative or design suggestion on its own merit. There may be a tendency to disregard an alternative because of a concern about one part of it. Each area within an alternative or design suggestion that is acceptable should be considered for use in the final design, even if the entire alternative or design suggestion is not implemented. Variations of these alternatives and design suggestions by the owner or designer are encouraged.

All alternatives and design suggestions were developed independently of each other to provide a broad range of options to consider for implementation. Therefore, some of them are mutually exclusive, so acceptance of one may preclude the acceptance of another. In addition, some of the alternatives may be interrelated, so acceptance of one or more may not yield the total of the cost savings shown for each alternative. Design suggestions could also be interrelated thus precluding a part of one or more suggestions from being implemented if another design suggestion is also implemented.

The reader should evaluate all alternatives carefully in order to select the combination of ideas with the greatest beneficial impact on the project. Once this has been accomplished, the total cost savings resulting from the VE study can be calculated based on implementing a revised, all-inclusive design solution.

SUMMARY OF POTENTIAL COST SAVINGS

PROJECT: **WIDENING AND RECONSTRUCTION OF FOREST HILL ROAD**

Project No. STP-3213(3) and STP-3213(1) - Bibb County, Georgia

ALT. NO.	DESCRIPTION	ORIGINAL COST	ALTERNATIVE COST	INITIAL COST SAVINGS	RECURRING COST SAVINGS	TOTAL PW LCC SAVINGS
	Forsyth Road/US 41 to Wimbish Road – 4-Lane Segment (Metric Units)					
ALIGNMENT (AF)						
AF-2	Use High Density Polyethylene Pipe (HDPE) pipe in lieu of reinforced concrete pipe (RCP) for urban drainage in non-traffic areas longitudinal to roadway. Retain RCP for cross traffic areas.	$171,936	$125,196	$46,740		$46,740
AF-4	Relocate the drainage outfall at STA 6+015 LT away from the existing building (Parcel #44) to reduce the potential for damage to the building	$5,018	$5,602	($584)		($584)
SECTION (SF)						
SF-2	Reduce the median from 6 meters wide to 5.5 meters wide and reduce the shoulders from 3.6 meters to 3.0 meters	$404,266		$404,266		$404,266
SF-3	Use 24-inch wide curb and gutter in lieu of 30-inch	$414,334	$323,408	$90,926		$90,926
SF-5	Use mechanically stabilized earth (MSE) walls in lieu of cast-in-place (CIP) concrete retaining walls	$1,847,619	$1,248,648	$598,971		$598,971
SF-7	Use 3:1 front slopes in lieu of of 4:1 at north side of Wimbish and 2:1 back slopes. Eliminate the wall at STA 14+080.	$15,533		$15,533		$15,533
BRIDGE (BF)						
BF-1	Move the retaining wall at Charter Blvd. closer to the sidewalk to reduce right-of-way impacts	$143,195	$156,722	($13,527)		($13,527)
BF-2	Add wall at North Minster and Wimbish to reduce the fill quantities and right-of-way impacts	$157,810	$253,169	($95,359)		($95,359)

VALUE ENGINEERING ALTERNATIVE

PROJECT:	**WIDENING AND RECONSTRUCTION OF FOREST HILL RD** *Project No. STP-3213(3) and STP-3213(1) - Bibb County, Georgia* ***Preliminary Plan Submittal***	ALTERNATIVE NO.:	**AF-2**
DESCRIPTION:	**USE HDPE PIPE IN LIEU OF CONCRETE RCP FOR URBAN DRAINAGE IN ALL NON-TRAFFIC AREAS**	SHEET NO.:	**1 of 5**

ORIGINAL DESIGN:

The current design uses reinforced concrete storm drain pipe (RCP) for all storm drain applications, both transverse and longitudinal to the roadway.

ALTERNATIVE:

Allow the use of High Density Polyethylene Pipe (HDPE) for storm drain applications outside of the traffic areas. Use HDPE pipe for all longitudinal drainage systems which do not cross the roadway. Retain RCP pipe for high traffic areas.

ADVANTAGES:

- Less construction cost
- Faster construction since the pipe is much lighter

DISADVANTAGES:

- Not currently being used by GDOT
- May need further review

DISCUSSION:

Even though HDPE pipe is being recommended in this alternative for only the longitudinal system, it meets the structural integrity to be used for all drainage applications, including cross-drains up to 60-inch diameter. The installation cost is much less for HDPE pipe since it is manufactured in 20 ft lengths rather than the RCP's 8 ft lengths. HDPE pipe is widely used throughout the United States.

The HDPE may require 6-inches of GAB bedding for the pipe foundation, which is included in this analysis. A suggestion is to bid both RCP and HDPE to gain a competitive comparison.

COST SUMMARY	INITIAL COST	PRESENT WORTH RECURRING COSTS	PRESENT WORTH LIFE-CYCLE COST
ORIGINAL DESIGN	$ 171,936		$ 171,936
ALTERNATIVE	$ 125,196		$ 125,196
SAVINGS (Original minus Alternative)	$ 46,740		$ 46,740

NFLOW HDPE

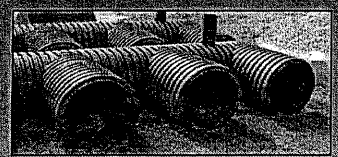

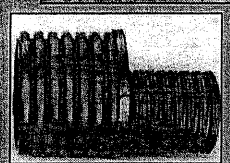

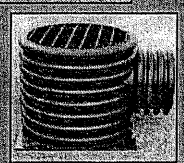

Specialty Fabrications
Southeast Culvert can provide a variety of specialty fabrications in HDPE. These structures are advantageous for complex systems such as roof drainage and underground detention manifolds. HDPE can also be fabricated into drop inlets for yard or sports field drainage problems. Each inlet is supplied with a removable grate for maintenance purposes. Fabrications can be made to order. Contact SEC for more information.

End Treatments
A variety of end treatments can be utilized on HDPE pipe outlets. Flared end sections, steel and HDPE, are typical and cost effective methods of spreading out flow and preventing scour. Safety flared end sections may also be used. Safety ends are typical for county and state right of ways. If steel end sections are used, a tapered sleeve will aid with ease of attachment. HDPE may also be beveled to match slopes on the jobsite. If a beveled end is chosen it is beneficial to pour a concrete collar to protect the pipe end. Concrete headwalls can be formed with a plastic stub so that HDPE may be joined with a split coupler. Functionality and aesthetics are important for choosing an end treatment, SEC, Inc. can provide further information concerning these issues.

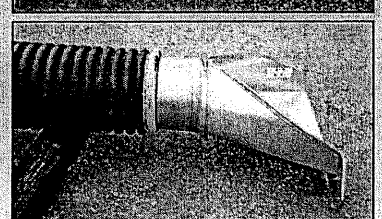

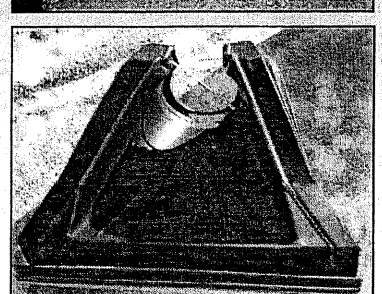

NFLOW HDPE

Durability
HDPE is a tough material that can withstand handling and installation processes. It is the most chemically inert drainage product available. NFLOW pipe is effective in a PH range from 2 to 14, no other drainage product can consistently perform in such a large PH range.

Abrasion can be the most destructive force that drainage pipes will endure, specifically the invert of the pipe. Abrasion is caused by bedload that is carried by high velocities. HDPE is highly resistant to abrasive wear due to its physical makeup and ductility.

The resistivity of soils does not effect the performance of HDPE. NFLOW pipe has an excellent record of success in both alkali and acid installations, and it exceeds expectations in harsh environments.

Structural Integrity
All flexible pipe develops structural strength through soil-pipe interaction. The soil provides the stiffness for the pipe. Flexible pipe will deflect until the soil halts deflection. The performance of the flexible pipe improves as the quality of the surrounding backfill improves.

Selection of backfill material is critical to pipe durability. Class I, II, and III are acceptable materials. Class III requires fill height limitations and care during installation. All materials should be compacted to 90% Standard Proctor Density.

Southeast Culvert, Inc. recommends following the practices of ASTM D2321 "Standard Practice for Underground Installation of Thermoplastic Pipe for Sewers and Other Gravity-Flow Applications" or contact your SEC representative for suggestions.

Applications
NFLOW pipe meets all governing specifications for AASHTO M 294 Type S pipe. NFLOW is designated for storm sewer and culvert installations. It may also be utilized for underground detention. HDPE ideal for roof drainage systems due to its versatility. This product may be specified as cross drain or storm drain for any type of private or public work.

Sketch Alt. AF-2

2/5

CALCULATIONS

PROJECT: **WIDENING AND RECONSTRUCTION OF FOREST HILL RD**
Project No. ~~STP-3213(3)~~ and STP-3213(1) - Bibb County, Georgia
Concept Report

ALTERNATIVE NO.: AF-2

SHEET NO.: 3 of 5

Alt. HDPE Pipe Costs:
use $1/Pipe-Dia-LF for Installation:

∴ 18" HDPE = $18/L.F (installion only)
24" HDPE = $24/L.F. "
30" HDPE = $30"/L.F. "
36" HDPE = $36/L.F. "

For HDPE Pipecost for pipematerials Only
See sheet No. 4 (Alt. AF-2) for Cost $/L.F.

(6") GAB: $(.5' \times 3' \times 3{,}465') \times \frac{.076T}{CF} = 395$ Tons

(4-Lane Section) Calculations Alt. AF-2

SOUTHEAST CULVERT, INC.

DATE 1/22/2009
JOB NAME MARTA
LOCATION
CUSTOMER
ATTN:

sheet: 4/5

FOOTAGE	SIZE	GAGE	DESCRIPTION	UNIT $	TOTAL
1	18"		HDPE Pipe	$6.95	$6.95
					$0.00
1	24"		HDPE Pipe	$11.20	$11.20
					$0.00
1	30"		HDPE Pipe	$16.02	$16.02
					$0.00
1	36"		HDPE Pipe	$21.50	$21.50
					$0.00
					$0.00
					$0.00
					$0.00
					$0.00
					$0.00
					$0.00
					$0.00
					$0.00
					$0.00

*This quotation is good for 30 days
*Sales tax not included
*Southeast Culvert, Inc accepts no reponsibility for the accuracy of these quantities
***Please contact Mark McCord with questions - 770.963.5041**

$.50/(in-DIA)-L.F. (min)

Installation $ 1/(in-DIA)-L.F. (MAX)

(20 ft./length)

example:
24" pipe
e.g.
$11.20 + (24" × $1/in-DIA) / LF = $35.20 / L.F.

depending on pipe size and depth.
Use $.67 to $1/L.F.

COST WORKSHEET

PROJECT: **WIDENING OF FOREST HILL RD**
Project No. [redacted] and STP-3213(1) - Bibb County, Georgia

ALTERNATIVE NO.: AF-2

SHEET NO.: 5 of 5

PROJECT ITEM		ORIGINAL ESTIMATE			PROPOSED ESTIMATE		
ITEM	UNITS	NO. OF UNITS	COST/ UNIT	TOTAL	NO. OF UNITS	COST/ UNIT	TOTAL
Original Long. Pipe Cost							
450mm CRP	LM	131.77	760	100,145			
600mm CRP	LM	144.17	150	21,626			
750mm CRP	LM	205.98	106	21,834			
900mm CRP	LM	247.72	40	9,909			
Alt. HDPE Pipe Costs							
18" (HDPE) Pipe	L.F.				2494	6.95	17,334
24" (HDPE) Pipe	L.F.				492	11.20	5,510
30" (HDPE) Pipe	L.F.				348	16.02	5,575
36" (HDPE) Pipe	L.F.				131	21.50	2,817
GAB 6"	TN				395	22	8,690
Installation:							
18" (HDPE)	L.F.				2494	18	44,892
24" (HDPE)	L.F.				492	24	11,808
30" (HDPE)	L.F.				348	30	10,440
36" (HDPE)	L.F.				131	36	4,716
Const Subtotal				153,514			111,782
Markup (%) at 12				18,422			13,414
TOTAL				171,936			125,196

VALUE ENGINEERING ALTERNATIVE

PROJECT:	**WIDENING AND RECONSTRUCTION OF FOREST HILL RD** *Project No. STP-3213(3) and STP-3213(1) - Bibb County, Georgia* ***Preliminary Plan Submittal***	ALTERNATIVE NO.:	**AF-4**
DESCRIPTION:	**RELOCATE THE DRAINAGE OUTFALL AT STA 6+015 LT AWAY FROM THE EXISTING BUILDING (PARCEL #44)**	SHEET NO.:	**1 of 4**

ORIGINAL DESIGN:

There is a 450 mm storm drain pipe with an outfall at the back of the Macon Northside Hospital Building. The proposed pipe requires right-of-way tying into the back of the existing building.

ALTERNATIVE:

Shift the GA Std. 1033D catch basin approximately 5 meters to the north to attain a 15-degree skew from Structure No. E31 to Structure E32A, thus moving the outfall line of the 450mm RCP pipe away from the existing building.

ADVANTAGES:

- Eliminates the right-of-way conflict with the existing building
- Will be able to maintain the same configuration for the required right-of- way needed for the pipe excavation and installation

DISADVANTAGES:

- Increases the pipe length
- Minor amount of redesign needed
- Reduces risk to GDOT

DISCUSSION:

The design adjustment for Structures E31, E32A, and E32B will alleviate potential conflicts with the existing building structure at a relatively small increase to the project cost.

COST SUMMARY	INITIAL COST	PRESENT WORTH RECURRING COSTS	PRESENT WORTH LIFE-CYCLE COST
ORIGINAL DESIGN	$ 5,018		$ 5,018
ALTERNATIVE	$ 5,602		$ 5,602
SAVINGS (Original minus Alternative)	$ (586)		$ (586)

SKETCH

PROJECT: **WIDENING AND RECONSTRUCTION OF FOREST HILL RD**
Project No. STP-3213(3) and STP-3213(1) - Bibb County, Georgia
Preliminary Plan Submittal

ALTERNATIVE NO.: AF-4

ORIGINAL DESIGN ☐ ALTERNATIVE DESIGN ☒ BOTH ☐

SHEET NO.: 2 of 4

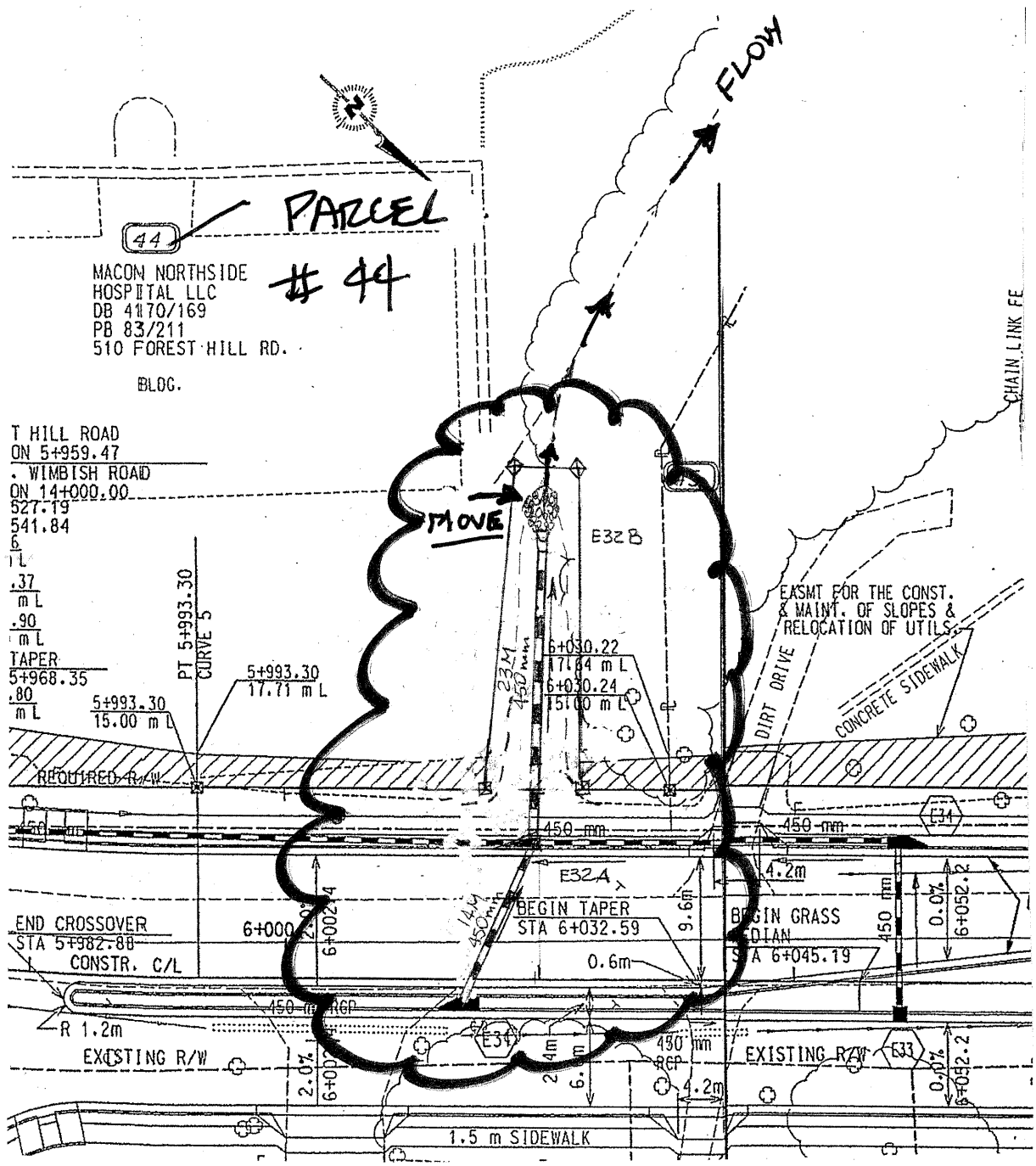

PROJECT: **WIDENING AND RECONSTRUCTION OF FOREST HILL RD**
Project No. STP-3213(3) and STP-3213(1) - Bibb County, Georgia
Concept Report

ALTERNATIVE NO.: AF-4

RELOCATE DRAINAGE OUTFALL AWAY FROM EXISTING BUILDING ON PAR No. 44 (STA. 6+015 LT)

SHEET NO.: 3 of 4

PROPOSED DESIGN STRUCTURES E31, E32A AND E32B
14 M 450mm RCP + 23 M 450mm RCP = 37 M 450 mm RCP

37M x 131.77 = $4,875.49

THE PIPE LENGTH INCREASED BY 8.82% IN DESIGN. THE ORIGINAL LENGTH FOR THIS LINE WAS 34 M AND IS NOW 37M.

EXISTING DESIGN STRUCTURES E31, E32A AND E32B

34 M x 131.77 = $4,480.18

AN INCREASE OF $395.31

THE RIGHT-OF-WAY CONFIGURATION CAN REMAIN THE WITH LITTLE EFFECT ON ANTICIPATED COST.

COST WORKSHEET

PROJECT: **WIDENING OF FOREST HILL RD**
Project No. STP-3213(3) and STP-3213(1) - Bibb County, Georgia
RELOCATE DRAINAGE OUTFALL AWAY FROM EXISTING BUILDING ON PAR No. 44 (STA. 6+015 LT)

ALTERNATIVE NO.: AF-4

SHEET NO.: 4 of 4

PROJECT ITEM		ORIGINAL ESTIMATE			PROPOSED ESTIMATE		
ITEM	UNITS	NO. OF UNITS	COST/ UNIT	TOTAL	NO. OF UNITS	COST/ UNIT	TOTAL
550-1180	LM1	34	131.77	4,480.18	37	131.77	4,875.49
Subtotal				4,480.18			4,875.49
Markup (%) at	.12			537.62			585.06
TOTAL				5,017.80			5,602.54

VALUE ENGINEERING ALTERNATIVE

PROJECT: **WIDENING AND RECONSTRUCTION OF FOREST HILL RD**
Project No. STP-3213(3) and STP-3213(1) - Bibb County, Georgia
Preliminary Plan Submittal

ALTERNATIVE NO.: **SF-2**

DESCRIPTION: **REDUCE THE MEDIAN FROM 6 METERS WIDE TO 5.5 METERS WIDE AND REDUCE THE SHOULDERS FROM 3.6 METERS TO 3.0 METERS**

SHEET NO.: **1 of 5**

ORIGINAL DESIGN:

The design uses a 6-meter-wide flush median with 3.6 meter shoulders.

ALTERNATIVE:

Reduce the section by using a 5.5-meter-wide flush median with 3-meter-wide shoulders. The shoulders would have a 0.6-meter-wide grass strip.

ADVANTAGES:

- Reduces construction costs
- Reduces construction schedule
- Reduces right-of-way costs

DISADVANTAGES:

- Changes design section

DISCUSSION:

The alternative provides a median reduction, shoulder reduction, and a reduced grassed strip on both sides to save significant project costs.

COST SUMMARY	INITIAL COST	PRESENT WORTH RECURRING COSTS	PRESENT WORTH LIFE-CYCLE COST
ORIGINAL DESIGN	$ 404,266		$ 404,266
ALTERNATIVE	$ 0		$ 0
SAVINGS (Original minus Alternative)	$ 404,266		$ 404,266

STATE	PROJECT NUMBER	SHEET NO.	TOTAL SHEETS
GA.	STP-3213 (1)		
REVISION DATES			

TYPICAL SECTIONS
STP - 3213 (1)
BIBB COUNTY

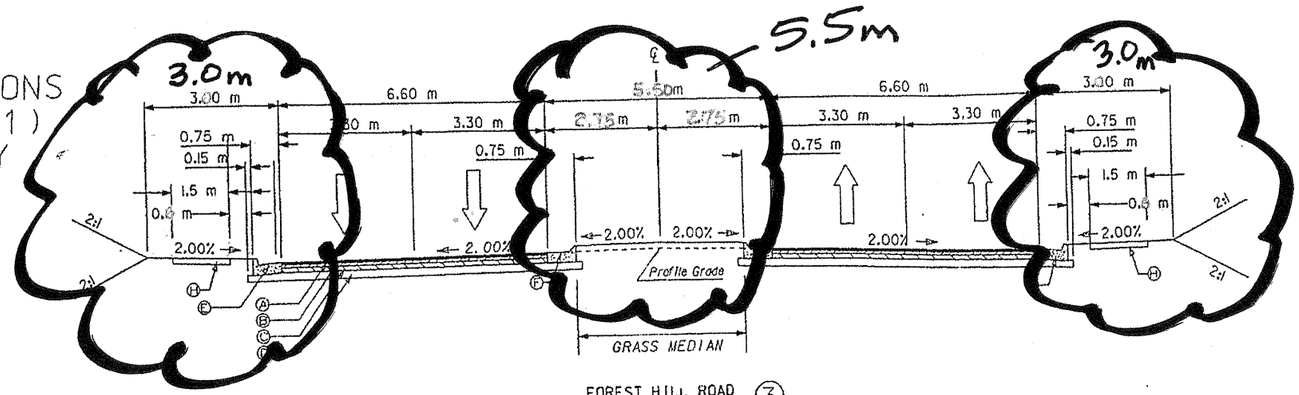

FOREST HILL ROAD
TYPICAL SECTION (3)
TANGENT SECTION
APPLIES FROM STA. 5+380.00 TO STA. 5+425.13
STA. 6+062.59 TO STA. 6+111.03

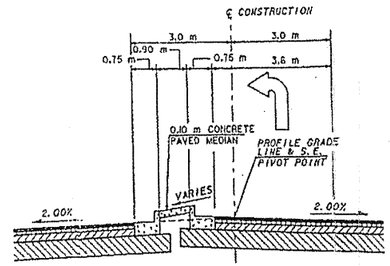

TYPICAL LEFT TURN DETAIL
NORMAL CROWN SECTION

FOREST HILL ROAD

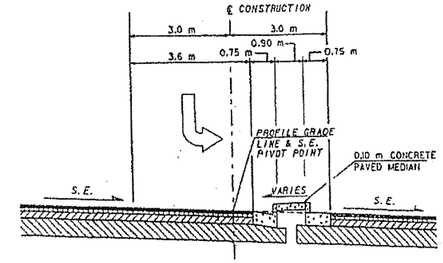

TYPICAL LEFT TURN DETAIL
SUPERELEVATED SECTION

FOREST HILL ROAD

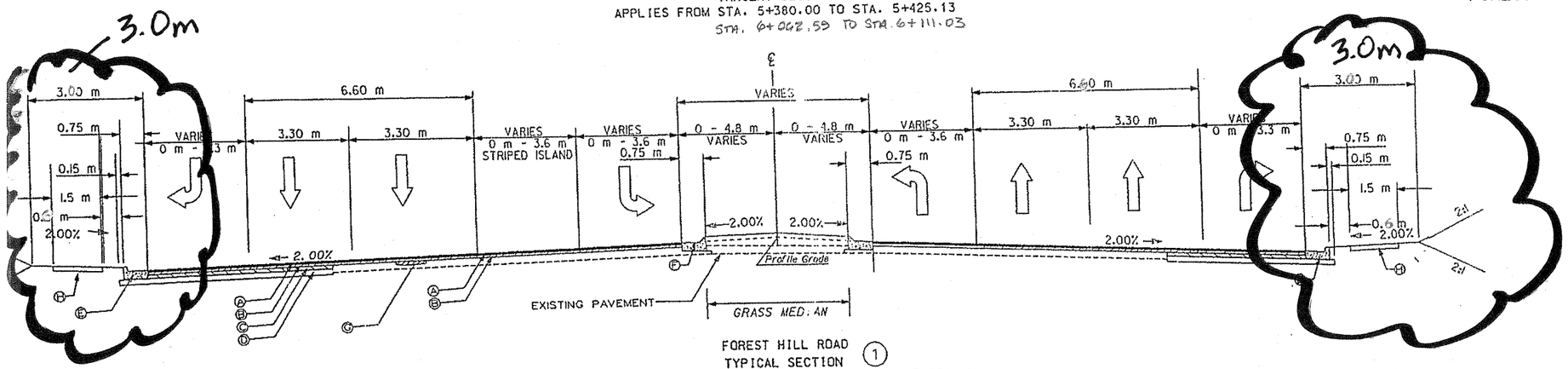

FOREST HILL ROAD
TYPICAL SECTION (1)
APPLIES FROM STA. 4+898.21 TO STA. 5+204.19
FROM STA. 5+620.00 TO STA. 6+114.45

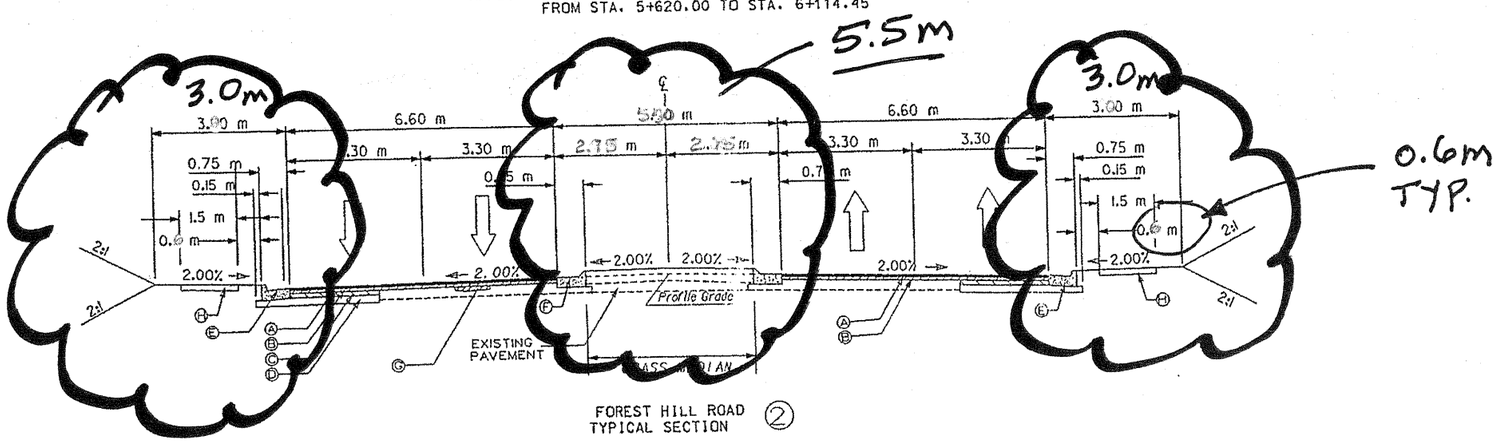

FOREST HILL ROAD
TYPICAL SECTION (2)
TANGENT SECTION
APPLIES FROM STA. 5+203.26 TO STA. 5+380.00

* RECHECK BEGINNING STA 5+204.19. SHOULD BE STA. 5+203.26

NOTE:
STANDARD CROSS-SLOPE OF 2.0% MAY BE VARIED TO BEST FIT THE EXISTING ROADWAY AS PER SECTION 149 OF THE STANDARD SPECIFICATIONS. SEE "ALLOWABLE RANGES TABLE."

ALLOWABLE RANGES TABLE

FOR THIS PROJECT, CROSS SLOPES THAT ARE ADJUSTED TO "BEST FIT" EXISTING PAVEMENT SLOPES ARE SUBJECT TO THE FOLLOWING LIMITS:

A. NORMAL CROWN

1.50% - MINIMUM
2.00% - DESIRABLE
2.50% - MAXIMUM

B. SUPERELEVATION RATE

S.E. RATE SHOWN ON PLANS OR S.E. RATE EXISTING IN FIELD, WHICHEVER IS GREATER.

C. SUPERELEVATION TRANSITION LENGTH (LENGTH FROM FLAT POINT TO FULL S.E.)*

	RATE OF CHANGE	CORRESPONDING DIFFERENCE IN GRADE BETWEEN PIVOT POINT AND EDGE OF PAVEMENT
MINIMUM	1:150	0.67%
DESIRABLE	1:200	0.50%
MAXIMUM	1:300	0.33%

* LENGTH SHALL BE SET TO AVOID CREATING A FLAT GUTTER GRADE ON LOW SIDE AND TO AVOID FLAT CROSS SLOPES AT OR NEAR THE LOW POINT OF VERTICAL CURVES.

D. POSITIONING OF SUPERELEVATION TRANSITION LENGTH ON SIMPLE CURVES.

50% OF TRANSITION INSIDE CURVE - MAXIMUM
33% OF TRANSITION INSIDE CURVE - DESIRABLE
20% OF TRANSITION INSIDE CURVE - MINIMUM

NOTE: CROWN WIPE-OUT SHALL BE AT THE SAME RATE AS THE S.E. TRANSITION.

E. SMOOTHING OF BREAKS IN EDGE PROFILE AT BEGIN AND END OF TRANSITION SHALL BE ACCOMPLISHED BY VERTICAL CURVE WITH A MINIMUM LENGTH (IN METERS) EQUAL TO THE SPEED DESIGN (IN km/h).

NOTE: CONSTRUCTION OF SUPERELEVATION SHALL BE IN ACCORDANCE WITH GA DOT STANDARD 9028C.

PAVEMENT DESIGN LEVEL "B" ALTERNATE

REQUIRED PAVEMENT

(A) ASPHALTIC CONCRETE 12.5 mm SUPERPAVE - 90 kg/m²
(B) ASPHALTIC CONCRETE 19 mm SUPERPAVE - 120 kg/m²
(C) ASPHALTIC CONCRETE 25 mm SUPERPAVE - 150 kg/m²
(D) GRADED AGGREGATE BASE - 300 mm
(E) 200 mm X 750 mm CONC. CURB & GUTTER, GA STD. 9032 B. TYPE 2
(F) 200 mm X 750 mm CONC. CURB & GUTTER, GA STD. 9032 B. TYPE 7
(G) ASPHALTIC CONCRETE LEVELING AS REQUIRED
(H) 1.50 m X 100 mm THICK CONCRETE SIDEWALK

OTES

'ILL SLOPES OVER 3 m REQUIRE GUARDRAIL
EE CROSS-SECTIONS FOR FURTHER INFORMATION

IEW CURB & GUTTER SHALL BE TRANSITIONED FROM A NORMAL ECTION TO A HEADER CURB SECTION IN 3 m WHEN GRANITE, OCK, OR HEADER CURB IS ENCOUNTERED AT THE TIE-IN TO XISTING CROSS STREETS.

PPLICABLE STATIONING BASED ON CHANGE IN NUMBER OF LANES.

STATE OF GEORGIA

Stantec
4815 Riverside Drive
Macon, Georgia U.S.A.
31210-1117

TYPICAL SECTIONS
FOREST HILL ROAD (723) RECONSTRUCTION

DRAWING No. 5-1

STATE	PROJECT NUMBER	SHEET NO.	TOTAL SHEETS
GA.	STP-3213 (1)		
REVISION DATES			

SF-2

ICAL SECTIONS
P - 3213 (1)
IBB COUNTY

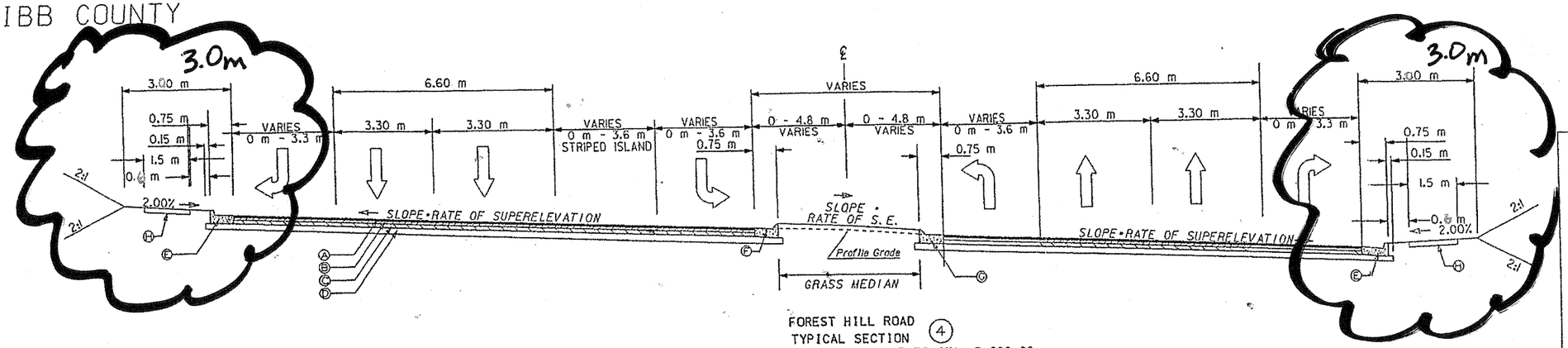

FOREST HILL ROAD
TYPICAL SECTION (4)
APPLIES FROM STA. 5+425.13 TO STA. 5+620.00

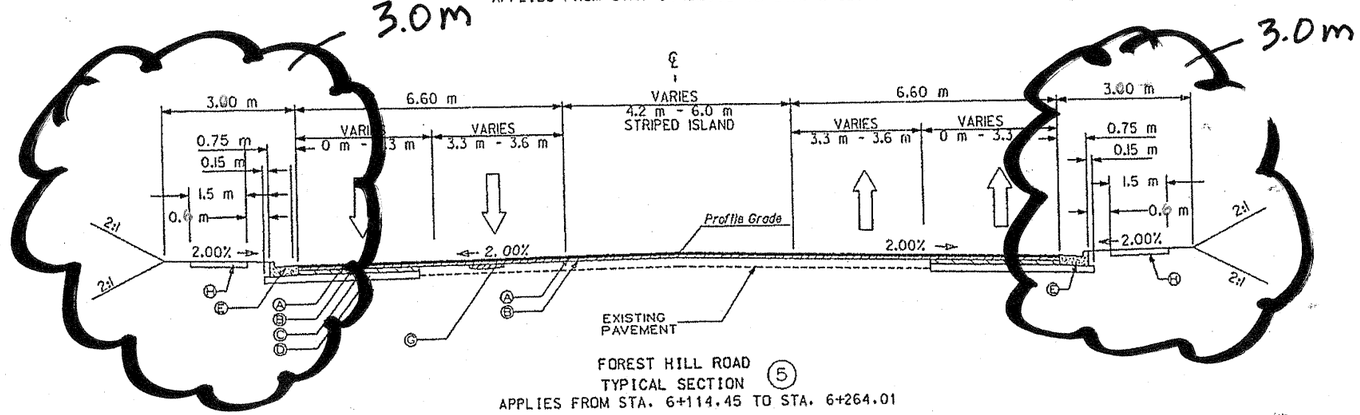

FOREST HILL ROAD
TYPICAL SECTION (5)
APPLIES FROM STA. 6+114.45 TO STA. 6+264.01

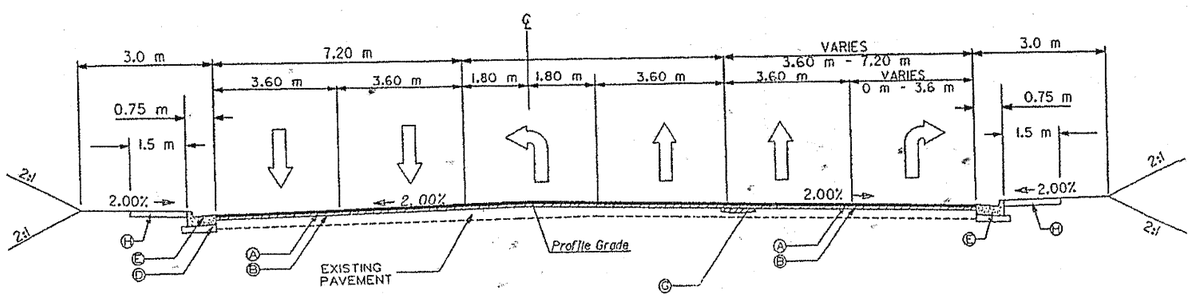

VINEVILLE AVENUE
TYPICAL SECTION (6)
APPLIES FROM STA. 4+986.157 TO STA. 5+098.70

NOTE:
STANDARD CROSS-SLOPE OF 2.0% MAY BE VARIED TO BEST FIT THE EXISTING ROADWAY AS PER SECTION 149 OF THE STANDARD SPECIFICATIONS. SEE 'ALLOWABLE RANGES TABLE.'

ALLOWABLE RANGES TABLE

FOR THIS PROJECT, CROSS SLOPES THAT ARE ADJUSTED TO 'BEST FIT' EXISTING PAVEMENT SLOPES ARE SUBJECT TO THE FOLLOWING LIMITS:

A. NORMAL CROWN

1.50% - MINIMUM
2.00% - DESIRABLE
2.50% - MAXIMUM

B. SUPERELEVATION RATE

S.E. RATE SHOWN ON PLANS OR S.E. RATE EXISTING IN FIELD, WHICHEVER IS GREATER.

C. SUPERELEVATION TRANSITION LENGTH (LENGTH FROM FLAT POINT TO FULL S.E.) *

	RATE OF CHANGE	CORRESPONDING DIFFERENCE IN GRADE BETWEEN PIVOT POINT AND EDGE OF PAVEMENT
MINIMUM	1:150	0.67%
DESIRABLE	1:200	0.50%
MAXIMUM	1:300	0.33%

* LENGTH SHALL BE SET TO AVOID CREATING A FLAT GUTTER GRADE ON LOW SIDE AND TO AVOID FLAT CROSS SLOPES AT OR NEAR THE LOW POINT OF VERTICAL CURVES.

D. POSITIONING OF SUPERELEVATION TRANSITION LENGTH ON SIMPLE CURVES.

50% OF TRANSITION INSIDE CURVE - MAXIMUM
33% OF TRANSITION INSIDE CURVE - DESIRABLE
20% OF TRANSITION INSIDE CURVE - MINIMUM

NOTE: CROWN WIPE-OUT SHALL BE AT THE SAME RATE AS THE S.E. TRANSITION.

E. SMOOTHING OF BREAKS IN EDGE PROFILE AT BEGIN AND END OF TRANSITION SHALL BE ACCOMPLISHED BY VERTICAL CURVE WITH A MINIMUM LENGTH (IN METERS) EQUAL TO THE SPEED DESIGN (IN km/h).

NOTE: CONSTRUCTION OF SUPERELEVATION SHALL BE IN ACCORDANCE WITH GA DOT STANDARD 9028C.

PAVEMENT DESIGN LEVEL 'B'

REQUIRED PAVEMENT

(A) ASPHALTIC CONCRETE 12.5 mm SUPERPAVE - 90 kg/m²
(B) ASPHALTIC CONCRETE 19 mm SUPERPAVE - 120 kg/m²
(C) ASPHALTIC CONCRETE 25 mm SUPERPAVE - 150 kg/m²
(D) GRADED AGGREGATE BASE - 300 mm
(E) 200 mm X 750 mm CONC. CURB & GUTTER, GA STD. 9032 B. TYPE 2
(F) 200 mm X 750 mm CONC. CURB & GUTTER, GA STD. 9032 B. TYPE 7
(G) ASPHALTIC CONCRETE LEVELING AS REQUIRED
(H) 1.50 m X 100 mm THICK CONCRETE SIDEWALK

ALTERNATE

NOTES

FILL SLOPES OVER 3 m REQUIRE GUARDRAIL
SEE CROSS-SECTIONS FOR FURTHER INFORMATION

NEW CURB & GUTTER SHALL BE TRANSITIONED FROM A NORMAL SECTION TO A HEADER CURB SECTION IN 3 m WHEN GRANITE, ROCK, OR HEADER CURB IS ENCOUNTERED AT THE TIE-IN TO EXISTING CROSS STREETS.

APPLICABLE STATIONING BASED ON CHANGE IN NUMBER OF LANES. SEE PLAN SHEETS FOR LOCATION OF CHANGE IN SUPERELEVATION.

STATE OF GEORGIA

Stantec
4315 Riverside Drive
Macon, Georgia U.S.A.
31210-1112
Tel. 478.474.6100

TYPICAL SECTIONS
FOREST HILL ROAD (723) RECONSTRUCTION

DRAWING No. 5-2

CALCULATIONS

PROJECT: **WIDENING AND RECONSTRUCTION OF FOREST HILL RD**
Project No. STP-3213(3) and STP-3213(1) - Bibb County, Georgia
Preliminary Plan Submittal

ALTERNATIVE NO.: D3
SF-2

PROPOSE USING 5.5M WIDE RAISED MEDIAN ILO 6M MEDIAN
(REDUCTION OF SHOULDER AND GRASS STRIP INCLUDED)

SHEET NO.: 4 of 5

MEDIAN REDUCTION LENGTH - 270.3M $26.16 M³

SHOULDER REDUCTION WIDTH - 0.6M EA SIDE OF TYPICAL SECTION

MEDIAN REDUCTION 0.5M TOTAL WIDTH

$V_m = L \times W \times h$ * THE WIDTH INCLUDES THE TOTAL WIDTH OF REDUCTION FOR LT. & RT SIDES OF THE MEDIAN

$= 270.3M \times 0.5M \times 0.279M$

$= 37.7 M^3 \times 26.16 \$/M^3$

$= \$986.23$

SHOULDER REDUCTION FOR R.O.W REDUCTION COST

$A = L \times W$

$= 3{,}131.01M \times 1.20 M$

$= 3{,}757.21 M^2$

CONVERT TO ENGLISH UNITS DUE TO ALL R.O.W. IS IN ENGLISH

$A = 10{,}436.70 \times 4$

$= 41{,}746.80 SF \times 3.02 SF$ (RAW RESIDENTIAL/COMMERCIAL AVG)

$= \$126{,}075.34$

REDUCTION OF PROPOSED RIGHT-OF-WAY EARTHWORK VOLUMES (SHOULDERS LT. & RT)

$V_E = 3{,}131.01 M \times 2.4 M \times 0.6 M$

$= 4{,}508.65 M^3 \times 26.16 \$/M^3$

$= \$117{,}946.39$ AVG. SHOULDER

COST WORKSHEET

PROJECT: **WIDENING OF FOREST HILL RD**
Project No. STP-3213(3) and STP-3213(1) - Bibb County, Georgia
PROPOSE USING 5.5M WIDE RAISED MEDIAN ILO 6M MEDIAN
(REDUCTION OF SHOULDER AND GRASS STRIP INCLUDED)

ALTERNATIVE NO.: DS
SF-2

SHEET NO.: 5 of 5

PROJECT ITEM		ORIGINAL ESTIMATE			PROPOSED ESTIMATE		
ITEM	UNITS	NO. OF UNITS	COST/ UNIT	TOTAL	NO. OF UNITS	COST/ UNIT	TOTAL
210-0100 GRADING COMM	M^3	4546.00	26.16	118,932.52			
RIGHT-OF-WAY REDUCTION		TOTAL AREA. = 3,757.21 M^2					
STA. 3+133.00 - STA. 6+264.01 M							
CONVERTED TO ENGLISH DUE R.O.W COST		CONVERTED 41,746.80 SF × 3.02 $/FT2 = 126,075.34					
ESTM. IS IN ENGLISH							
		R.O.W MARK UP 1.15 × $126,075.34 =					+ 144,986.64
							$271,061.98
Subtotal				118,932.52			
Markup (%) at 12%				14,271.90			
TOTAL				133,204.42			

R/W = + 271,062
TOTAL = $404,266

VALUE ENGINEERING ALTERNATIVE

PROJECT: **WIDENING AND RECONSTRUCTION OF FOREST HILL RD**
Project No. STP-3213(3) and STP-3213(1) - Bibb County, Georgia
Preliminary Plan Submittal

ALTERNATIVE NO.: **SF-3**

DESCRIPTION: **USE 24-IN WIDE CURB AND GUTTER IN LIEU OF 30-IN WIDE SECTION**

SHEET NO.: **1 of 6**

ORIGINAL DESIGN:

The design uses an 8-inch x 30-inch wide curb and gutter section.

ALTERNATIVE:

Use an 8-inch x 24-inch wide curb and gutter section in lieu of the 8-inch x 30-inch section.

ADVANTAGES:

- Lowers construction cost
- Could save some concrete finishing time

DISADVANTAGES:

- Slightly less gutter spread, however it could be gained back by letting the gutter spread out 6 more inches into the travel lane

DISCUSSION:

It has been common practice to use 8-inch x 30-inch curb and gutter on GDOT projects, however local governments and site developments more commonly use 8-inch x 24-inch curb and gutter sections. The narrower section will save costs.

COST SUMMARY	INITIAL COST	PRESENT WORTH RECURRING COSTS	PRESENT WORTH LIFE-CYCLE COST
ORIGINAL DESIGN	$ 414,334		$ 414,334
ALTERNATIVE	$ 323,408		$ 323,408
SAVINGS (Original minus Alternative)	$ 90,926		$ 90,926

SKETCH

PROJECT: **WIDENING AND RECONSTRUCTION OF FOREST HILL RD**
Project No. ~~STP-3215(3)~~ and STP-3213(1) - Bibb County, Georgia
Preliminary Plan Submittal 4-Lanes

ALTERNATIVE NO.: SF-3

ORIGINAL DESIGN ☐ ALTERNATIVE DESIGN ☐ BOTH ☒

SHEET NO.: 2 of 6

Original Design

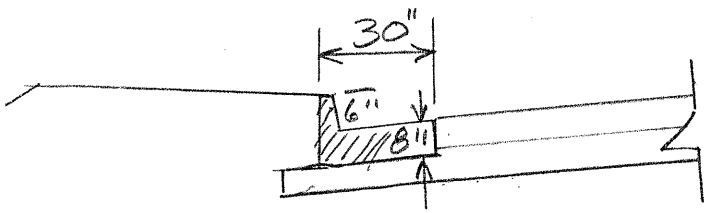

8" x 30" c&g
Tp2 on the outside
Tp7 on the inside (median)

Alternate Design

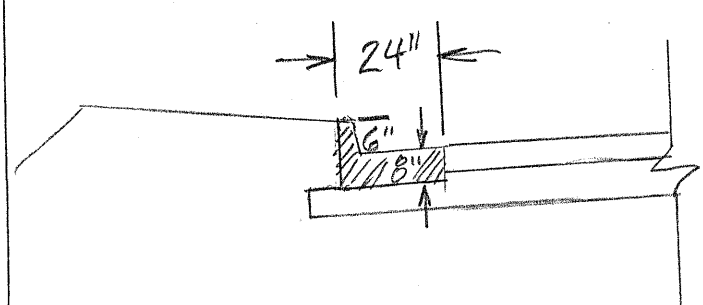

8" x 24" c&g
Tp2 & Tp7

All the curbs are 6" high the Tp2 or 7 determines the slope on the curb face. Tp7 is considered a mountable curb.

PROJECT: **WIDENING AND RECONSTRUCTION OF FOREST HILL RD**
Project No. ~~STP-3213(1)~~ and STP-3213(1) - Bibb County, Georgia
Preliminary Plan Submittal 4-Lane Section

ALTERNATIVE NO.: SF-3

SHEET NO.: 3 of 6

Length of Curb & Gutter Required

TP2: 4400 Lm = 14,436 L.F.

TP7: 3300 Lm = 10,827 L.F.

The Alternate costs are in english since the most Recent unit price costs are in english. There were no metric unit costs for 8"x24" Curb & gutter (200mm x 600mm)
No GDOT projects have been let with 8"x24" TP7 according to the Item Mean Summary, Therefore the same unit price as the 8"x24" TP2. This did not adversely affect the cost comparison since the 200mm x 750mm TP7 was actually Less expensive than the 200mm x 750mm TP2.

GEORGIA DEPARTMENT OF TRANSPORTATION
ITEM MEAN SUMMARY FOR 01/2008 TO 12/2008 (Latest)
FOR SPEC YEAR 2001 CONTRACTS - (ENGLISH)

Date : January 20, 2009
Page No. : 3

EM CODE	ITEM DESCRIPTION	QUANTITY	USE	UM	MEAN	WTD AVG
4-6201	DOUBLE SURFACE TREATMENT , STN SIZE 7 & 89, GP 2 ONLY,	412213.00	6	SY	2.35	2.33
9-1000	RUMBLE STRIPS	76.00	15	EA	943.02	884.44
1-1000	GRIND CONC PVMT	547000.00	2	SY	2.39	2.16
2-0206	MILL ASPH CONC PVMT, 1 1/2 IN DEPTH	85233.00	10	SY	5.22	2.42
2-0208	MILL ASPH CONC PVMT, 2 IN DEPTH	10701.00	2	SY	5.70	5.63
2-0214	MILL ASPH CONC PVMT, 3 1/2 IN DEPTH	10850.00	4	SY	7.00	8.13
2-0218	MILL ASPH CONC PVMT, 4 1/2 IN DEPTH	7375.00	2	SY	3.87	4.51
2-5010	MILL ASPH CONC PVMT, VARIABLE DEPTH	4544747.00	100	SY	4.76	1.22
3-1000	REINF CONC APPROACH SLAB	11301.00	16	SY	156.88	158.39
3-1100	REINF CONC APPROACH SLAB, INCL CURB	1736.00	4	SY	156.99	149.63
3-1200	REINF CONC APPROACH SLAB, INCL SLOPED EDGE	2701.00	7	SY	165.22	165.44
6-1000	ASPHALTIC CONCRETE CURB -	51431.00	14	LF	10.16	8.13
7-1571	STRAIGHT GRANITE CURB, 5 IN X 17 IN, TP A	606.00	1	LF	35.00	35.00
9-0022	PLAIN PC CONC PVMT, CL 3 CONC, 10 INCH THK	10200.00	1	SY	58.00	58.00
9-0024	PLAIN PC CONC PVMT, CL 3 CONC, 11 INCH THK	1000.00	1	SY	98.50	98.50
9-0026	PLAIN PC CONC PVMT, CL 3 CONC, 12 INCH THK	50317.00	3	SY	72.50	68.53
1-0004	CONC SLOPE PAV, 4 IN	11992.00	12	SY	53.02	45.81
1-0014	DRIVEWAY CONCRETE, 4 IN TK	308.00	3	SY	30.55	28.07
1-0016	DRIVEWAY CONCRETE, 6 IN TK	6419.00	22	SY	37.67	37.00
1-0018	DRIVEWAY CONCRETE, 8 IN TK	6295.00	14	SY	45.62	45.37
1-0050	CONC SLOPE DRAIN	594.00	8	SY	79.54	78.39
1-0104	CONC SIDEWALK, 4 IN	184057.50	70	SY	46.38	34.31
1-0105	CONC SIDEWALK, 5 IN	5500.00	1	SY	26.00	26.00
1-0106	CONC SIDEWALK, 6 IN	267.00	4	SY	88.32	52.00
1-0108	CONC SIDEWALK, 8 IN	6523.00	15	SY	89.24	83.03
1-0204	PLAIN CONC DITCH PAVING, 4 IN	43095.00	18	SY	41.22	38.47
1-0301	CONC SPILLWAY, TP 1	42.00	13	EA	2062.39	2059.64
1-0302	CONC SPILLWAY, TP 2	2.00	1	EA	1500.00	1500.00
1-0303	CONC SPILLWAY, TP 3	48.00	20	EA	2098.37	1968.58
1-0304	CONC SPILLWAY, TP 4	6.00	3	EA	1900.00	1908.33
1-0600	CONC HEADWALLS	13.00	2	CY	1093.50	1085.30
1-0700	CONCRETE MEDIAN, VARB TK	544.00	2	SY	52.80	50.27
1-0740	CONCRETE MEDIAN, 4 IN	19013.00	19	SY	34.46	33.15
1-0748	CONCRETE MEDIAN, 6 IN	16830.00	31	SY	61.29	57.71
1-0754	CONCRETE MEDIAN, 7 1/2 IN	750.00	3	SY	54.45	42.71
1-0756	CONCRETE MEDIAN, 8 IN	302.00	4	SY	69.88	80.32
1-3999	CONCRETE V GUTTER	5913.00	7	LF	21.83	19.97
1-4020	CONC VALLEY GUTTER, 6 IN	4189.00	16	SY	40.16	37.95
1-4030	CONC VALLEY GUTTER, 8 IN	12937.00	20	SY	51.70	44.42
1-4050	CONC VALLEY GUTTER WITH CURB, 8 IN	5886.00	3	SY	56.56	50.94
1-5001	CONCRETE HEADER CURB, 4 IN, TP 1	350.00	1	LF	13.75	13.75
1-5002	CONCRETE HEADER CURB, 6 IN, TP 2	28214.00	16	LF	17.82	13.03
1-5003	CONCRETE HEADER CURB, 8 IN, TP 3	401.00	2	LF	19.68	18.73
1-5004	CONCRETE HEADER CURB, 10 IN, TP 4	115.00	1	LF	17.88	17.88
1-5008	CONCRETE HEADER CURB, 6 IN, TP 7	4856.00	6	LF	30.62	16.19
1-5057	CONC DOWELED INTEGRAL CURB, TP 7, INCL DOWELS	2050.00	2	LF	15.64	15.59
1-6012	CONC CURB & GUTTER, 6 IN X 24 IN, TP 2	5093.00	6	LF	27.25	16.09
1-6022	CONC CURB & GUTTER, 6 IN X 30 IN, TP 2	31879.00	11	LF	18.31	16.01
1-6216	CONC CURB & GUTTER, 8 IN X 24 IN, TP 2	2424.00	3	LF	18.81	11.43
1-6221	CONC CURB & GUTTER, 8 IN X 30 IN, TP 1	4296.00	5	LF	16.63	15.48
1-6222	CONC CURB & GUTTER, 8 IN X 30 IN, TP 2	252937.00	60	LF	22.28	15.69
1-6720	CONC CURB & GUTTER, 6 IN X 30 IN, TP 7	10914.00	2	LF	33.50	17.40

Calculations
Alt. SF-3 4/6

x 3.28 = $51.46/Lm
for 200mm x 750mm

ITEM MEAN SUMMARY FOR 01/2008 TO 12/2008 (Latest)
FOR SPEC YEAR 2001 CONTRACTS - (ENGLISH)

EM CODE	ITEM DESCRIPTION	QUANTITY	USE	UM	MEAN	WTD AVG
1-6740	CONC CURB & GUTTER, 8 IN X 30 IN, TP 7	82001.00	12	LF	15.29	13.26
1-9000	PRECAST BUMPER BLOCK	19.00	1	EA	73.50	73.50
4-1000	SAWED JOINTS IN EXIST PAVEMENTS - PCC	10992.00	14	LF	4.63	2.96
6-1100	PVMT REINF FABRIC STRIPS, TP 2, 18 INCH WIDTH	144825.00	39	LF	7.49	5.84
6-2118	HIGH STRENGTH PVMT REINF FABRIC, 18 IN WIDTH	76.00	1	LF	12.07	12.07
9-1620	LOW-DENSITY, CLOSED-CELL, X-LINKED, ETHYLENE VINYL ACETATE,	5196.00	97	LF	30.44	30.10
3-1000	PORTLAND CEMENT CONCRETE WHITETOPPING	22.00	1	CY	655.00	655.00
5-1000	FILTER FABRIC FOR EMBANKMENT STABILIZATION	63099.00	5	SY	4.32	4.01
6-2012	INDENTATION RUMBLE STRIPS - GROUND-IN-PLACE (CONTINUOUS)	16.05	3	GLM	2452.43	1230.93
6-2015	INDENTATION RUMBLE STRIPS - GROUND-IN-PLACE (SKIP)	244.12	27	GLM	2122.26	855.47
7-1010	GEOGRID REINFORCEMENT, TP B	3140.00	2	SY	15.42	12.56
1-1000	RESEALING ROADWAY JOINTS AND CRACKS, TP -	875000.00	1	LF	0.95	0.95
1-2000	RESEALING BRIDGE JOINTS, TP -	1331.00	1	LF	28.78	28.78
0-0100	GROOVED CONCRETE	62019.00	29	SY	5.36	4.67
0-1006	SUPERSTR CONCRETE, CL AA, BR NO -	23545.00	45	LS	790.00	762.56
0-1008	SUPERSTR CONCRETE, CL AA-1, BR NO -	465.00	1	LS	767.78	767.78
0-1009	SUPERSTR CONCRETE, CL AAA, BR NO -	76.00	1	LS	1304.40	1304.40
0-2100	CONCRETE BARRIER	14030.00	16	LF	48.58	42.80
0-2110	CONCRETE PARAPET, SPCL DESIGN	5215.00	8	LF	227.92	230.83
0-3002	CLASS AA CONCRETE	10111.00	17	CY	560.41	488.44
0-3101	CLASS A CONCRETE	23447.61	36	CY	570.79	246.73
0-3104	CLASS A CONCRETE, SIGNS	44.00	2	CY	865.00	791.36
0-3107	CLASS A CONCRETE, RETAINING WALL	6675.00	6	CY	472.48	399.25
0-3115	CLASS A CONCRETE, TYPE P2, RETAINING WALL	220.00	1	LF	475.00	475.00
0-3120	CLASS A CONCRETE, TYPE P3, RETAINING WALL	340.00	1	LF	536.55	536.55
0-3200	CLASS B CONCRETE	941.00	17	CY	634.62	418.17
0-3201	CLASS B CONCRETE, RETAINING WALL	866.00	10	CY	808.95	610.15
0-3402	CLASS CS CONCRETE	20.00	1	CY	360.00	360.00
0-3650	CLASS AA-1 CONCRETE	3042.00	2	CY	385.88	326.36
0-3700	SEAL CONC	177.00	1	CY	221.63	221.63
0-3800	CLASS A CONCRETE, INCL REINF STEEL	537.80	20	CY	821.24	628.37
0-3900	CLASS B CONCRETE, INCL REINF STEEL	5.00	1	CY	682.50	682.50
0-9999	CLASS B CONC, BASE OR PVMT WIDENING	2830.00	42	CY	212.78	189.75
1-2100	STR STEEL, SWAYBRACING	2832.00	1	LB	7.00	7.00
1-3000	STR STEEL, BR NO -	2903190.00	11	LS	2.34	2.19
2-1200	BRIDGE TIMBER, TREATED	26.00	1	MBM	6195.74	6195.74
4-0600	TWENTY-FOUR HOUR ACCELERATED STRENGTH CONC	560.00	4	CY	1268.60	809.49
7-9001	PSC BEAMS, AASHTO TYPE I, BR NO -	734.00	1	LF	80.30	80.30
7-9002	PSC BEAMS, AASHTO TYPE II, BR NO -	8570.00	8	LF	129.10	124.69
7-9003	PSC BEAMS, AASHTO TYPE III, BR NO -	8372.00	8	LF	150.99	142.77
7-9006	PSC BEAMS, AASHTO TYPE VI, BR NO -	420.00	2	LF	2135.00	2100.00
7-9030	PSC BEAMS, AASHTO, BULB TEE, 54 IN, BR NO -	12273.00	9	LF	171.58	162.30
7-9031	PSC BEAMS, AASHTO, BULB TEE, 63 IN, BR NO -	7400.00	6	LF	194.72	185.45
7-9032	PSC BEAMS, AASHTO, BULB TEE, 72 IN, BR NO -	21089.00	6	LF	191.75	197.41
7-9033	PSC BEAMS, AASHTO, BULB TEE, 74 IN, BR NO -	11153.00	4	LF	210.43	213.53
1-1000	BAR REINF STEEL	3597897.00	47	LB	1.03	0.88
1-3000	SUPERSTR REINF STEEL, BR NO -	4950600.00	54	LS	1.01	0.92
4-1000	EPOXY COATED SUPERSTR REINF STEEL, BR NO -	260573.00	6	LS	1.29	1.18
5-2015	GALV STEEL PIPE HANDRAIL -	599.00	2	LF	41.21	40.50
5-2020	GALV STEEL PIPE HANDRAIL, 2 IN, ROUND	11970.00	14	LF	65.97	37.45
5-1100	ALUM HANDRAIL, STD 3626	2306.00	6	LF	56.65	54.15
3-1000	RAISE EXISTING BRIDGE, STA -	11.00	11	LS	103759.09	103759.09

x 3.28 = $43.49
for 200mm x 150mm

Calculations
Alt. SF-3 5/6

COST WORKSHEET

PROJECT: **WIDENING OF FOREST HILL RD**
Project No. [redacted] and STP-3213(1) - Bibb County, Georgia
4-Lane Section

ALTERNATIVE NO.: SF-3

SHEET NO.: 6 of 6

PROJECT ITEM		ORIGINAL ESTIMATE			PROPOSED ESTIMATE		
ITEM	UNITS	NO. OF UNITS	COST/ UNIT	TOTAL	NO. OF UNITS	COST/ UNIT	TOTAL
Original Cost							
(200mm x 750mm C&G, Tp 2)	LM	4400	51.46	226,424			
(200mm x 750m C&G Tp7)	LM	3300	43.49	143,517			
Alternate Cost							
8"x24" c&g Tp 2	L.F.				14,436	11.43	165,004
8"x24" C&g Tp7	L.F.				10,827	11.43	123,753
Subtotal				369,941			288,757
Markup (%) at 12%				44,393			34,651
TOTAL				414,334			323,408

VALUE ENGINEERING ALTERNATIVE

PROJECT:	**WIDENING AND RECONSTRUCTION OF FOREST HILL RD** *Project No. STP-3213(3) and STP-3213(1) - Bibb County, Georgia* ***Preliminary Plan Submittal***	ALTERNATIVE NO.:	**SF-5**
DESCRIPTION:	**USE PRECAST MECHANICALLY STABILIZED EARTH WALLS IN LIEU OF CAST-IN-PLACE CONCRETE RETAINING WALLS**	SHEET NO.:	**1 of 5**

ORIGINAL DESIGN:

The design includes several cantilevered cast-in-place (CIP) concrete walls varying in height from 1.5 m to 5.5 m, with guardrails installed at-grade.

ALTERNATIVE:

Use mechanically stabilized earth (MSE) walls with Type A coping for cut sections and guardrail for the fill sections in lieu of the CIP concrete retaining walls.

ADVANTAGES:

- Faster construction
- Reduces fill/borrow quantities
- Reduces construction cost
- Improves aesthetics

DISADVANTAGES:

- May need to revise wall details

DISCUSSION:

Replacing the CIP concrete walls with MSE walls requires the same excavation quantities. The MSE wall price includes cost for aggregate backfill, thus slightly reducing the required fill quantities. Since the MSE wall construction does not requiring forming, pouring, and curing, there should be a marked reduction in construction schedule for this line item. Aesthetics is usually improved also because of the higher quality control and finish options on MSE panels.

COST SUMMARY	INITIAL COST	PRESENT WORTH RECURRING COSTS	PRESENT WORTH LIFE-CYCLE COST
ORIGINAL DESIGN	$ 1,847,619		$ 1,847,619
ALTERNATIVE	$ 1,248,648		$ 1,248,648
SAVINGS (Original minus Alternative)	$ 598,973		$ 598,973

SKETCH

PROJECT: **WIDENING AND RECONSTRUCTION OF FOREST HILL RD**
Project No. STP-3213(3) and STP-3213(1) - Bibb County, Georgia
Preliminary Plan Submittal

ALTERNATIVE NO.: SF-5

ORIGINAL DESIGN ☐ ALTERNATIVE DESIGN ☐ BOTH ☒

SHEET NO.: 2 of 5

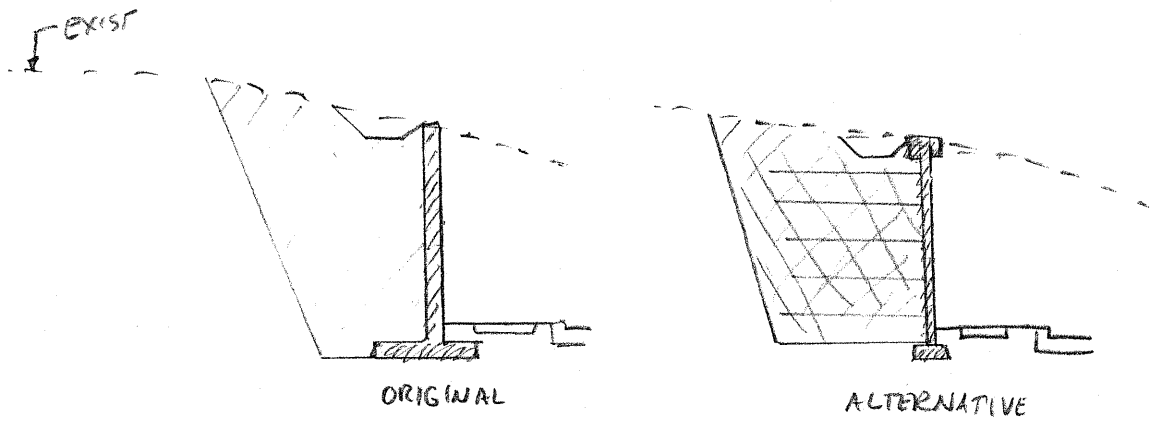

CUT SECTION

LEGEND

CUT + FILL

CUT + MSE STONE BACKFILL

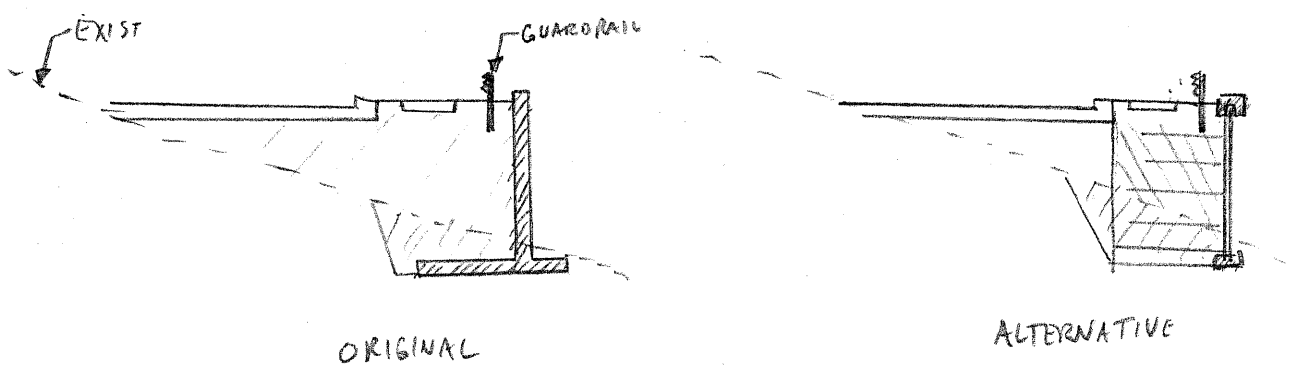

FILL SECTION

CALCULATIONS

PROJECT: **WIDENING AND RECONSTRUCTION OF FOREST HILL RD**
Project No. STP-3213(3) and STP-3213(1) - Bibb County, Georgia
Preliminary Plan Submittal

ALTERNATIVE NO.: SF-5

SHEET NO.: 3 of 5

ORIGINAL

		L	H	AVE	
WALLS 1 ⇒	STA 5+353.6 → 5+420 ⇒	66.4 m	2.5m → 6m	= 4.25m	FILL
2 ⇒	5+460 → 5+520 ⇒	60.0	1.5 → 4.6	= 3.05	CUT
3 ⇒	5+540 → 5+708 ⇒	168.0	2.5 → 5.5 → 71.5	= 3.75	CUT
4 ⇒	5+700 → 5+900 ⇒	200.0	2.6 → 3.5	= 3.0	FILL
5 ⇒	5+900 → 5+960 ⇒	60.0	1.5 → 3	= 2.25	FILL
		Σ = 554.4m			

WALL VOLUME = $\left[(H \times 0.533m)_{STEM} + (0.75H \times 0.457)_{FTG} + (0.610 \times 0.381)_{KEY}\right] \times L$

WALL 1 ⇒	[4.25 (.876) + 0.232]	×	66.4	=	262.6 m³
2	3.05	"	60	=	174.3
3	3.75	"	168	=	590.9
4	3.0	"	200	=	572.0
5	2.25	"	60	=	132.2
				Σ =	1,731.9m³ [@ 880.58 $/m³]

FILL VOLUME (2.6m × H) L

WALL 1 ⇒	4.25 × 2.6m	×	66.4 m	=	733.72 m³
2	3.05	"	60	=	475.8
3	3.75	"	168	=	1638
4	3.0	"	200	=	1560
5	2.25	"	60	=	351
				Σ =	4,758.52 m³

[CUT VOLUME IS THE SAME FOR BOTH]

PROJECT: **WIDENING AND RECONSTRUCTION OF FOREST HILL RD**
Project No. STP-3213(3) and STP-3213(1) - Bibb County, Georgia
Preliminary Plan Submittal

ALTERNATIVE NO.: SF-5

SHEET NO.: 4 of 5

ALTERNATIVE

WALLS => AREA = 1 = 66.4m x 4.25m = 282.2 m²
2 = 60.0 x 3.05 = 183.0
3 = 168.0 x 3.75 = 630.0
4 = 200.0 x 3.0 = 600.0
5 = 60.0 x 2.25 = 135.0
Σ = 1,830.2 m²

[@ 50 $/SF => 538.20 $/m²]

COPING = 554.4m

[@ 71.50 $/LF => 234.58 $/Lm]

COST WORKSHEET

PROJECT: **WIDENING OF FOREST HILL RD**
Project No. STP-3213(3) and STP-3213(1) - Bibb County, Georgia

ALTERNATIVE NO.: SF-5

SHEET NO.: 5 of 5

PROJECT ITEM		ORIGINAL ESTIMATE			PROPOSED ESTIMATE		
ITEM	UNITS	NO. OF UNITS	COST/ UNIT	TOTAL	NO. OF UNITS	COST/ UNIT	TOTAL
RETAINING WALL-CLASS B	m^3	1732	880.58	1,525,164.5			
BORROW EXCAV. FILL	m^3	4759	26.16	124,495.4			
MSE WALL	m^2				1830	538.20	984,906
COPING	LM				554	234.58	129,957
Subtotal				1,649,660			1,114,863
Markup (%) at 12%				197,959			133,783
TOTAL				1,847,619			1,248,646

VALUE ENGINEERING ALTERNATIVE

PROJECT:	**WIDENING AND RECONSTRUCTION OF FOREST HILL RD** *Project No. STP-3213(3) and STP-3213(1) - Bibb County, Georgia* ***Preliminary Plan Submittal***	ALTERNATIVE NO.:	**SF-7**
DESCRIPTION:	**USE A 3:1 OR 2:1 FRONT SLOPE IN LIEU OF A 4:1 SLOPE ON NORTH SIDE OF WIMBISH**	SHEET NO.:	**1 of 7**

ORIGINAL DESIGN:

The original design uses typical 4:1 front slopes on Wimbish Road beginning at STA 14+040 through STA 14+237.30 LT.

ALTERNATIVE:

Use a 3:1 or possible 2:1 front slope to reduce impacts on the existing concrete fence and eliminate the proposed gravity wall located at STA. 14 + 080 to STA. 14 + 106.70 LT. The adjustment will accommodate using the existing concrete inlet located at STA. 14 + 153.70 LT and allow a portion of the existing 600 mm pipe to be used, thus reducing new pipe installation.

ADVANTAGES:

- Reduces adjacent impacts
- Eliminates cost of gravity wall
- Uses the existing pipe
- Decreases project schedule

DISADVANTAGES:

- Will require a design variance

DISCUSSION:

The cost analysis assumes a 2:1 slope to reduce impacts and eliminate the proposed gravity wall located between STA. 14 + 080 to STA. 14 + 106.70 LT. The alternative sketch indicates the existing drainage ditch to remain in its same location. The existing concrete inlet and 600 mm drain could potentially remain in place and be used for continued storm water drainage.

COST SUMMARY	INITIAL COST	PRESENT WORTH RECURRING COSTS	PRESENT WORTH LIFE-CYCLE COST
ORIGINAL DESIGN	$ 15,533		$ 15,533
ALTERNATIVE	$ 0		$ 0
SAVINGS (Original minus Alternative)	$ 15,533		$ 15,533

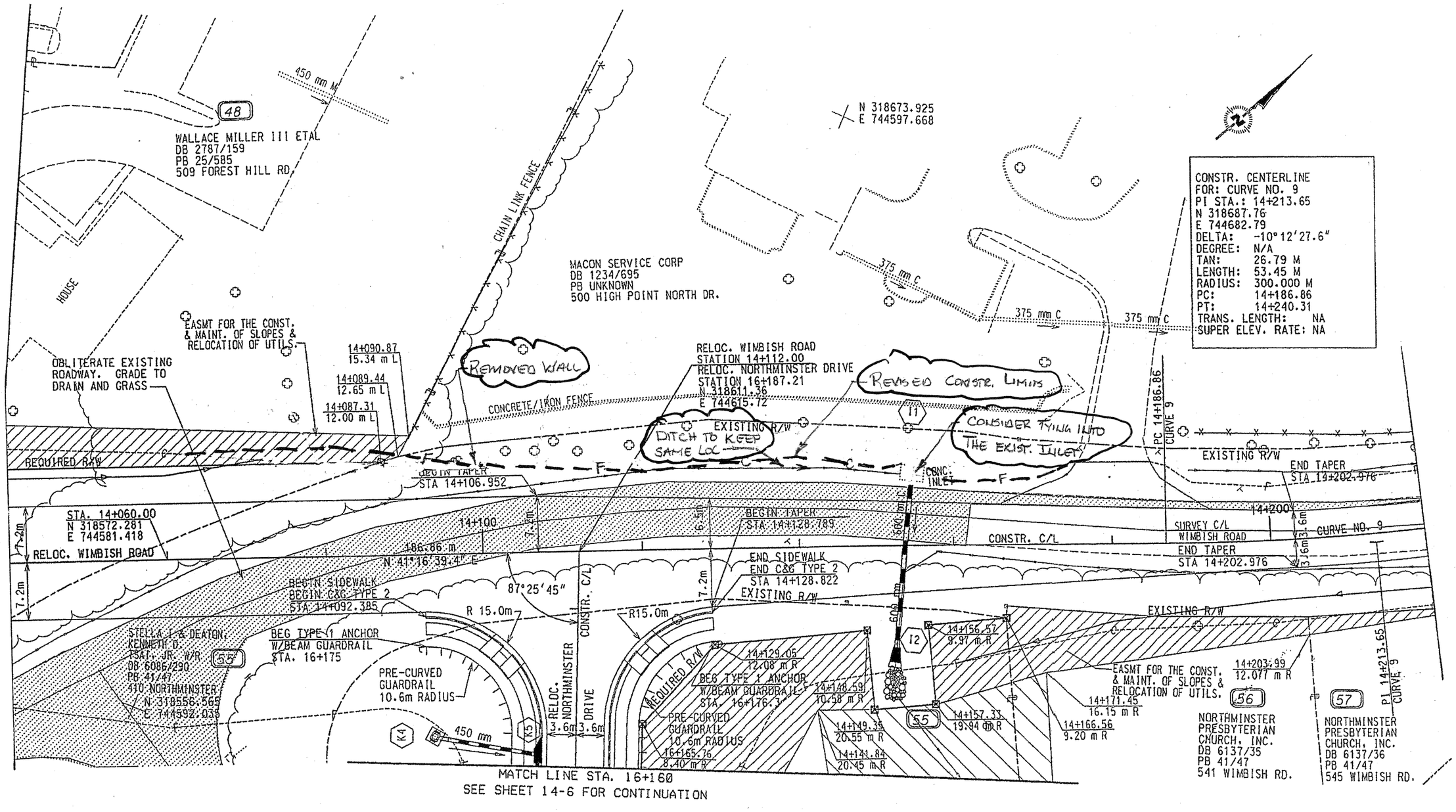

ALTERNATIVE

RAT

0 5
SCALE

STATE	PROJECT NUMBER	SHEET NO.	TOTAL SHEETS
GA.	STP-3213 (1)		
REVISION DATES			

3 OF 7

WIMBISH ROAD CROSS SECTIONS

DRAWING No. 39

5F-7

STATE	PROJECT NUMBER	SHEET NO.	TOTAL SHEETS
GA.	STP-3213 (1)		

REVISION DATES

4 OF 7

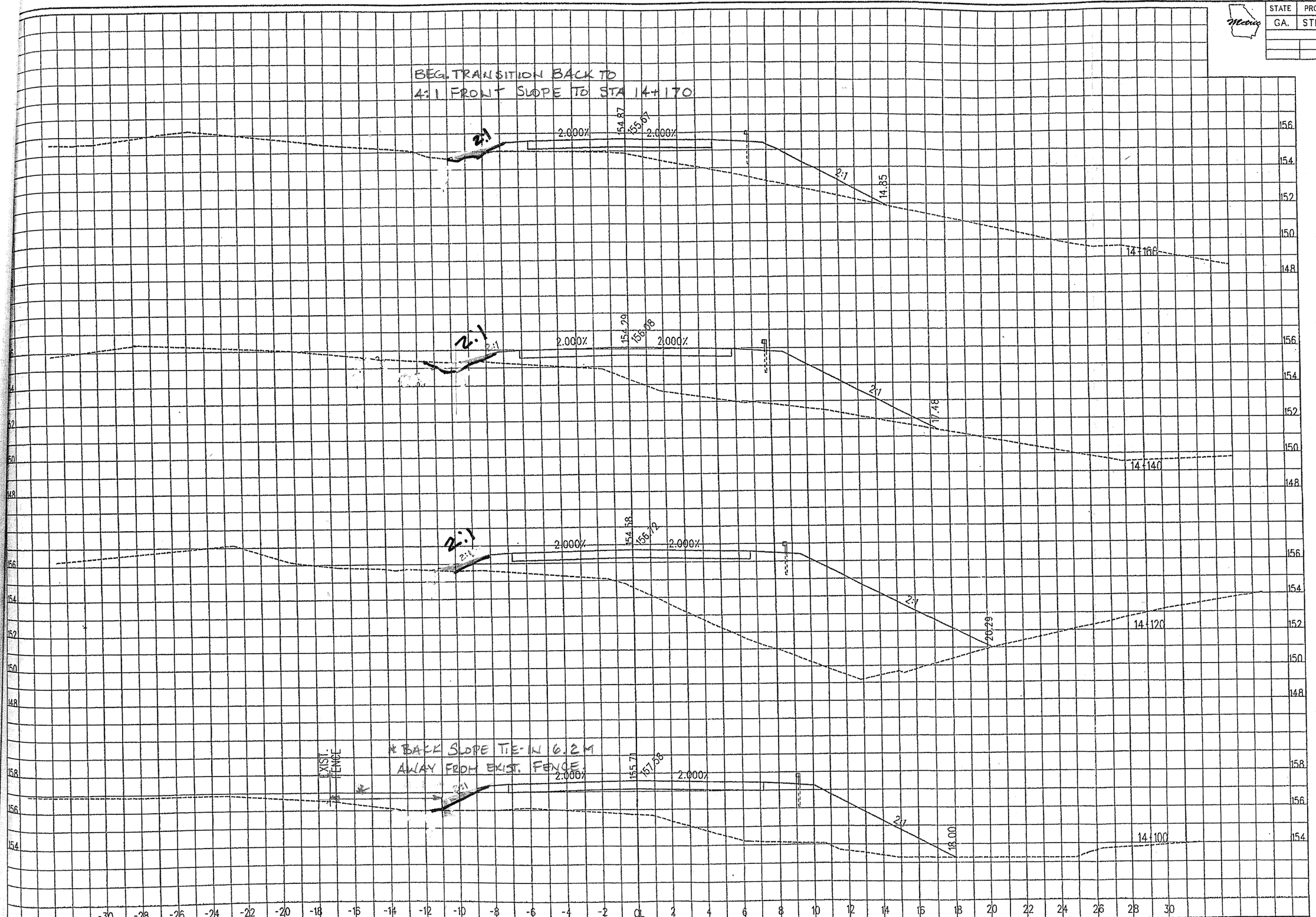

WINBISH ROAD CROSS SECTIONS

DRAWING No. 40

STATE	PROJECT NUMBER	SHEET NO.	TOTAL SHEETS
GA.	STP-3213 (1)		

REVISION DATES

5 OF 7

WIMBISH ROAD CROSS SECTIONS

DRAWING No 41

PROJECT: **WIDENING AND RECONSTRUCTION OF FOREST HILL RD**
Project No. STP-3213(3) and STP-3213(1) - Bibb County, Georgia
Preliminary Plan Submittal

ALTERNATIVE NO.: SF-7

PROPOSE USING 3:1 FRONT SLOPE I.L.O 4:1 AT THE NORTH SIDE OF WIMBISH
(CONSIDER USING A 2:1 SLOPE FOR MAX. BENEFIT)

SHEET NO.: 6 of 7

AREA TO INCREASE SLOPE FOR IMPACT REDUCTION: STA. 14+080 TO STA. 14+170 LT
EARTHWORK

STA. 14+060 - STA. 14+080

0 - $A_{080} = 0.5(.40) * 2$
$= 0.4 M^2$

$V_1 = 0.40 M^2 \times 20 M$
$= \underline{8 M^3} =$

STA. 14+080 - STA. 14+100

$A_{080} = 0.40 M^2 + A_{100} = .5(.40M) \times 2.6 M$
$= 0.52 M^2$

$A_{080} + A_{100} (20) = V$
$0.40 M^2 + 0.52 M^2 (20 M) = V$
$\underline{18.4 M^3} = V_2$

STA. 14+100 - STA. 14+120

$A_{100} = 0.52 + A_{120} = .5(.45M) 1.2M$
$= 0.27 M^2$

$A_T = A_{100} + A_{120} = 0.52 + 0.27 M^2$
$= 0.79 M^2 \times 20 M$
$= \underline{15.8 M^3} = V_3$

STA. 14+120 - STA. 14+140

$A_{120} = 0.27 M^2$ $A_{140} = .5(1M) * 1.40 M = 0.70 M^2$

$A_T = A_{120} + A_{140} = 0.27 M^2 + 0.70 M^2$
$= 0.97 M^2 \times 20 M$
$= \underline{19.4 M^3} = V_4$

STA. 14+140 - STA. 14+160

$A_{140} = 0.70 M^2$ $A_{160} = 0.5(1.6M) \times 1.8 M$
$= 1.44 M^2$

$A_T = A_{140} + A_{160} = 0.70 M^2 + 1.44 M^2$
$= 2.14 M^2 \times 20 M$
$= \underline{42.8 M^3} = V_5$

STA. 14+160 - STA. 14+180

$A_{160} = 1.44 M^2$ - $A = 0$

$V_6 = 1.44 M^2 \times 20 M = 28.8 M^3$

$V_T = V_1 + V_2 \ldots + V_6$
$= \underline{133.20 M^3}$

GRAVITY W/ALL LOCATION TO BE ELIMINATED
STA. 14+080 - STA. 14+106.70

LENGTH 26.7 M
HEIGHT 1.20 M

$A = \frac{L_1 + L_2}{2} S$
$= \frac{.40M + .20M}{2} (1.2M) \times 26.7$
$= \underline{9.61 M^3 \text{ CONC.}} \times .10 = 0.961$

$M^3_T = 9.61 M^3 + 0.961$
$= 10.57 \times \$880 -$
$= \$9,310.54$

ELIMINATE 600mm FLARED END SECTION
1EA-600mm F.E.S @ $777.06

COST WORKSHEET

PROJECT: **WIDENING OF FOREST HILL RD**
Project No. STP-3213(3) and STP-3213(1) - Bibb County, Georgia

ALTERNATIVE NO.: SF-7

SHEET NO.: 7 of 7

PROJECT ITEM		ORIGINAL ESTIMATE			PROPOSED ESTIMATE		
ITEM	UNITS	NO. OF UNITS	COST/ UNIT	TOTAL	NO. OF UNITS	COST/ UNIT	TOTAL
210-0100 GRADING COMP.	LS/M³	130.20	26.16	3,406.03			
500-3201 CL. B CONC. RET. WALL	M³	11	880.58	9,686.38			
550-4224 - F.E.S 600MM, S.D	EA	1	777.06	777.06			
Subtotal				13,869.47			
Markup (%) at 12%				1,664.34			
TOTAL				15,533.81			

VALUE ENGINEERING ALTERNATIVE

PROJECT: **WIDENING AND RECONSTRUCTION OF FOREST HILL RD**
Project No. STP-3213(3) and STP-3213(1) - Bibb County, Georgia
Preliminary Plan Submittal

ALTERNATIVE NO.: **BF-1**

DESCRIPTION: **MOVE THE RETAINING WALL AT CHARTER BLVD CLOSER TO THE SIDEWALK TO REDUCE RIGHT-OF-WAY IMPACTS**

SHEET NO.: **1 of 5**

ORIGINAL DESIGN:

The gravity retaining wall at Charter Blvd. is placed at the top of the hill in cut, with a drainage ditch mid-height to the edge of the sidewalk.

ALTERNATIVE:

Move the retaining wall further to the northeast and place it at the edge of the sidewalk to eliminate the cut and right-of-way requirements. Add a ditch at the back of the wall to collect the drainage.

ADVANTAGES:

- Excavation is minimized
- Right-of-way is reduced
- Gravity wall is eliminated

DISADVANTAGES:

- Adds a retaining wall and its cost

DISCUSSION:

The current design requires up to 4.5 ft of vertical cut and removal which requires additional right-of-way. The relocated retaining wall will reduce the cut and right-of-way, as well as minimize the environmental impacts to the adjacent parcels.

COST SUMMARY	INITIAL COST	PRESENT WORTH RECURRING COSTS	PRESENT WORTH LIFE-CYCLE COST
ORIGINAL DESIGN	$ 143,195		$ 143,195
ALTERNATIVE	$ 156,722		$ 156,722
SAVINGS (Original minus Alternative)	$ (13,527)		$ (13,527)

SKETCH

PROJECT: **WIDENING AND RECONSTRUCTION OF FOREST HILL RD**
Project No. STP-3213(3) and STP-3213(1) - Bibb County, Georgia
Concept Report

ALTERNATIVE NO.: BF-1

ORIGINAL DESIGN ☐ ALTERNATIVE DESIGN ☐ BOTH ☒

SHEET NO.: 2 of 5

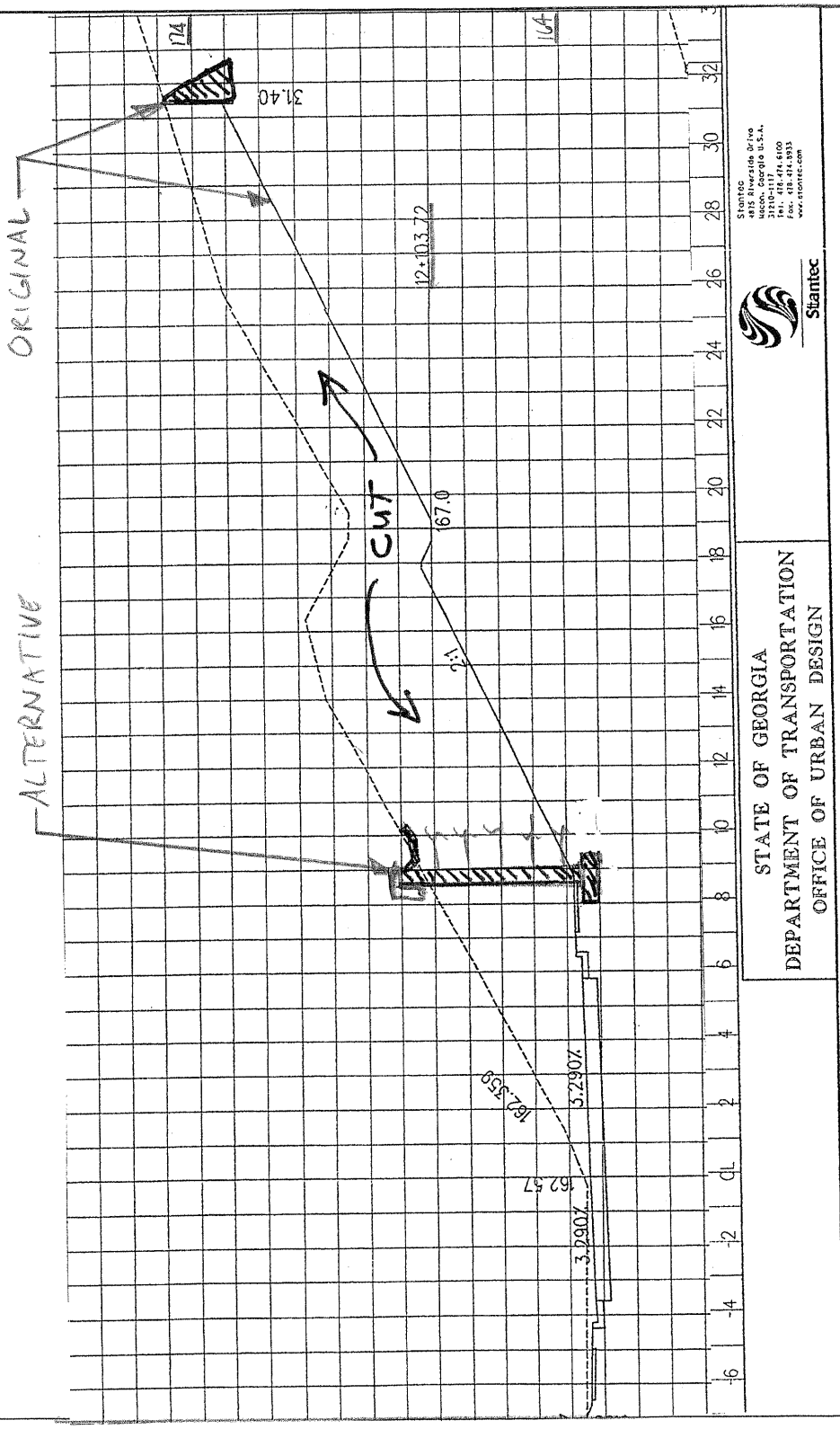

SKETCH

PROJECT: **WIDENING AND RECONSTRUCTION OF FOREST HILL RD**
Project No. STP-3213(3) and STP-3213(1) - Bibb County, Georgia
Concept Report

ALTERNATIVE NO.: BF-1

ORIGINAL DESIGN ☐ ALTERNATIVE DESIGN ☐ BOTH ☒

SHEET NO.: 3 of 5

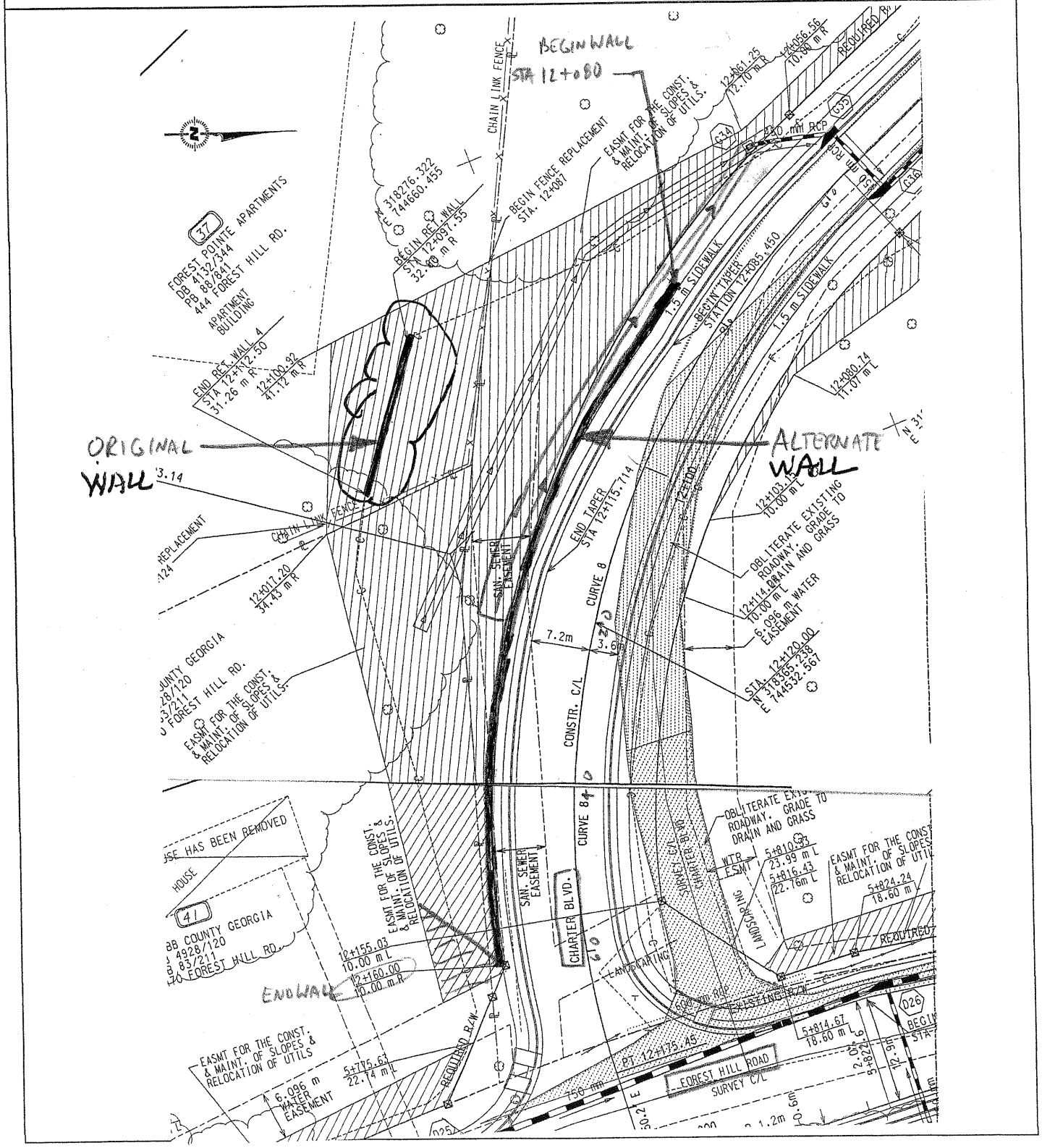

PROJECT: **WIDENING AND RECONSTRUCTION OF FOREST HILL RD**
Project No. STP-3213(3) and STP-3213(1) - Bibb County, Georgia
Concept Report

ALTERNATIVE NO.: BF-1

SHEET NO.: 4 of 5

ALT. WALL

BEGIN WALL STA = 12+080 H= 1m
END WALL STA = 12+160 H= 2m

LENGTH = 80m

AVE HT = $\left[\frac{\left(\frac{1+5}{2}\right)+\left(\frac{2+5}{2}\right)}{2}\right]$ = 3.25m

MAX HT. STA = 12+103 H= 5m

WALL VOLUME = $(1.539\,m^3)+(0.533\,m \times 1\,m)H$

AVE.H = 3.25 ∴ V_{1m} = 3.272 m^3/m

V_{80m} = 261.78 m^3
[@ 880.58 $/m³] = $230,518

MSE WALL => 80m x 3.25m = 260 m^2 x 10.76 SF/m² = 2,799 SF @ 50 $/SF = $139,931 TRY MSE

ORIG. WALL

STA 12+112.5 → 12+097.55 = 14.95m

WALL VOLUME = $\left(\frac{\left(\frac{2m}{2}+.203\right)+0.203}{2}\right) \times 2m$ = 1.406 m^3/m

$V_{14.95m}$ = 21.024 m^3

CUT VOLUME:

12+080	1m x 10m x ½ =	= 5 m^2		
12+100	20m (4m + 1.8m) ½ x 26m	= 75.4	x 20m	= 1,608 m^3
12+120	20 (5 + 1.8) ½ x 26	= 88.4		= 1,638
12+140	20 (3.8+0) ½ x 10	= 19.0		= 1,074
12+120	20 (2+0) ½ x 5	= 5		= 240

Σ = 4,560 m^3
[@ 12 $/CY = 15.69 $/m³]

ROW: From 12+080 to 12+160 V = 1,912 m^2 x 10.76 SF/m²

= 20,580 SF

COST WORKSHEET

PROJECT: **WIDENING OF FOREST HILL RD**
Project No. STP-3213(3) and STP-3213(1) - Bibb County, Georgia

ALTERNATIVE NO.: BF-1

SHEET NO.: 5 of 5

PROJECT ITEM		ORIGINAL ESTIMATE			PROPOSED ESTIMATE		
ITEM	UNITS	NO. OF UNITS	COST/ UNIT	TOTAL	NO. OF UNITS	COST/ UNIT	TOTAL
ORIGINAL							
GRAVITY WALL	m^3	21,024	880.58	18,513			
UNCLASSIFIED EXCAVATION	m^3	4,560	15.69	71,570			
ROW	SF	20,580	0.74	15,230			
(55+60 %)		x MARK-UP @		2.48			
				37,770			
PROPOSED							
MSE WALL	m^2				260	538.20 (50$/SF)	139,931
Subtotal				127,853			139,931
Markup (%) at 12%				15,342			16,791
TOTAL				143,195			156,722

+16,010

VALUE ENGINEERING ALTERNATIVE

PROJECT:	**WIDENING AND RECONSTRUCTION OF FOREST HILL RD** *Project No. STP-3213(3) and STP-3213(1) - Bibb County, Georgia* ***Preliminary Plan Submittal***	ALTERNATIVE NO.:	**BF-2**
DESCRIPTION:	**ADD A WALL AT NORTH MINSTER AND WIMBISH TO REDUCE FILL QUANTITIES AND RIGHT-OF-WAY**	SHEET NO.:	**1 of 5**

ORIGINAL DESIGN:

Raise the roadway profile approximately 5 meters at North Minster and Wimbish with a 2:1 fill and drainage right-of-way.

ALTERNATIVE:

Add a retaining wall at the back of the sidewalk to reduce the right-of-way impacts and fill quantities.

ADVANTAGES:

- Less fill material needed
- Less right-of-way required
- Less environmental impacts to adjacent property owners

DISADVANTAGES:

- Requires a new retaining wall
- Increases total project cost

DISCUSSION:

The current design requires that almost 5 meters of fill be placed on this corner, impacting the adjacent property owners. The added wall greatly reduces the environmental impacts and right-of-way quantities, but does add to the overall project cost. Since the cost of local right-of-way is relatively economical in the area, the wall is difficult to cost justify, but reduces overall visual and environmental impacts.

COST SUMMARY	INITIAL COST	PRESENT WORTH RECURRING COSTS	PRESENT WORTH LIFE-CYCLE COST
ORIGINAL DESIGN	$ 157,810		$ 157,810
ALTERNATIVE	$ 253,169		$ 253,169
SAVINGS (Original minus Alternative)	$ (93,359)		$ (93,359)

SKETCH

PROJECT: **WIDENING AND RECONSTRUCTION OF FOREST HILL RD**
Project No. STP-3213(3) and STP-3213(1) - Bibb County, Georgia
Preliminary Plan Submittal

ALTERNATIVE NO.: BF-2

ORIGINAL DESIGN ☐ ALTERNATIVE DESIGN ☐ BOTH ☒

SHEET NO.: 2 of 5

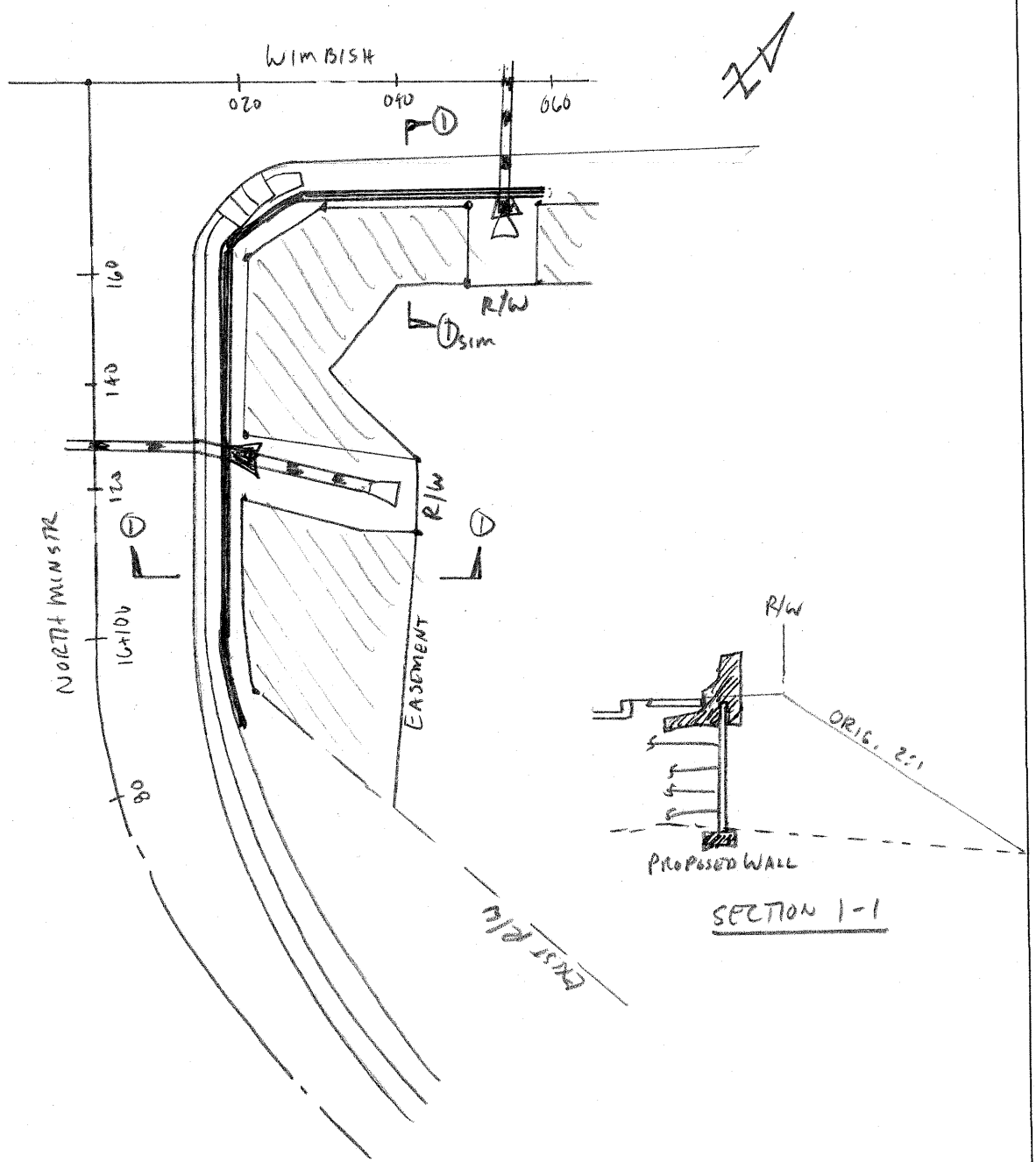

CALCULATIONS

PROJECT: **WIDENING AND RECONSTRUCTION OF FOREST HILL RD**
Project No. STP-3213(3) and STP-3213(1) - Bibb County, Georgia
Preliminary Plan Submittal

ALTERNATIVE NO.: BF-2

SHEET NO.: 3 of 5

RETAING WALL AREA

L = STA 16+080 TO 16+160 NORTHMINSTER = 80 m
14+120 TO 14+160 WIMBISH = 40 m

H = 1 m @ 16+080 } 2.75
4.5 @ 16+120 } 3.25 m
3 m @ 16+160 } 3.75

6 m @ 14+120 } 4.0 m
2 m @ 14+160

x 80 = 260 m² = 2,799 SF

x 40 = 160 m² = 1,722 SF

Σ = 420 m² = 4,521 SF
@ 538.20 $/m² @ 50 $/SF

FILL VOLUME

16+080 – 1.75 x 11 = 19.25 m²
} x 20 m = 528.5

16+100 – 3.2 x 21 x 1/2 = 33.6
} 20 = 798.5

16+120 – 5 x 18.5 x 1/2 = 46.25
} 20 = 522.5

16+140 – 1 x 6 = 6
} 20 = 300

16+160 – 3 x 16 x 1/2 = 24
} 20 = 640

14+120 – $\left(\frac{12+4}{2}\right)$ x 5 = 40
} 40 = 960

14+160 – 2 x 8 x 1/2 = 8

Σ = 3,750 m³

[@ 26.16 $/m³
20 $/CY]

CALCULATIONS

PROJECT: **WIDENING AND RECONSTRUCTION OF FOREST HILL RD**
Project No. STP-3213(3) and STP-3213(1) - Bibb County, Georgia
Preliminary Plan Submittal

ALTERNATIVE NO.: BF-2

SHEET NO.: 4 of 5

R/W

16+120 DRAINAGE R/W = 192 m²
14+155 " " 80 m²
Σ 272 m²
= 2928 SF

R/W COST =
[@ 1.47 $/SF]

EASEMENT

1400 m² [@ ½ 1.47 = 0.74 $/SF]
= 15,069 SF

DRAINAGE

600mm PIPE = 3 [@ 180.02 LM]
900mm PIPE = 16 [@ 247.72 LM]

COST WORKSHEET

PROJECT: **WIDENING OF FOREST HILL RD**
Project No. STP-3213(3) and STP-3213(1) - Bibb County, Georgia

ALTERNATIVE NO.: BF-2

SHEET NO.: 5 of 5

PROJECT ITEM		ORIGINAL ESTIMATE			PROPOSED ESTIMATE		
ITEM	UNITS	NO. OF UNITS	COST/ UNIT	TOTAL	NO. OF UNITS	COST/ UNIT	TOTAL
ORIGINAL							
FILL MAT'L	m^2	3,750	26.16	98,100			
DRAINAGE 600mm	LM	3	170.02	510			
900mm	LM	16	247.22	3,964			
R/W	SF	2928	1.47	4,304			
EASEMENT	SF	15,069	0.74	11,151			
	(55+60%) MARK-UP =			x2.48			
				38,328			
PROPOSED							
RETAINING WALL	m^2				420	538.20	226,044
Subtotal				140,902			226,044
Markup (%) at				16,908			27,125
TOTAL				157,810			253,169

VALUE ENGINEERING ALTERNATIVE

PROJECT:	**WIDENING AND RECONSTRUCTION OF FOREST HILL RD** *Project No. STP-3213(3) and STP-3213(1) - Bibb County, Georgia* ***Preliminary Plan Submittal***	ALTERNATIVE NO.:	**AW-3**
DESCRIPTION:	**ROTATE THE SKEW ANGLE AT FOREST HILL AND OLD LUNDY TO 90 DEGREES**	SHEET NO.:	**1 of 2**

ORIGINAL DESIGN:

The realignment of this intersection reduces the skew from 40° to approximately 60°, with a 500 ft radius curve.

ALTERNATIVE:

Revise the roadway to include an alignment with a 300 ft radius curve and a 90° skew angle.

ADVANTAGES:

- Shorter roadway
- Minimizes right-of-way, fill, culvert and extension and roadway extension
- Safer intersection

DISADVANTAGES:

- Sharper curve at 25 mph

DISCUSSION:

The realignment allows the intersection to be optimal at 90°. The 25 mph speed reduction is acceptable at a stopping point. The culvert and stream buffer impacts are reduced.

COST SUMMARY	INITIAL COST	PRESENT WORTH RECURRING COSTS	PRESENT WORTH LIFE-CYCLE COST
ORIGINAL DESIGN			
ALTERNATIVE	DESIGN SUGGESTION		
SAVINGS (Original minus Alternative)			

SKETCH

PROJECT: **WIDENING AND RECONSTRUCTION OF FOREST HILL RD**
Project No. STP-3213(3) and STP-3213(1) - Bibb County, Georgia
Preliminary Plan Submittal

ALTERNATIVE NO.: AW-3

ORIGINAL DESIGN ☐ ALTERNATIVE DESIGN ☐ BOTH ☒

SHEET NO.: 2 of 2

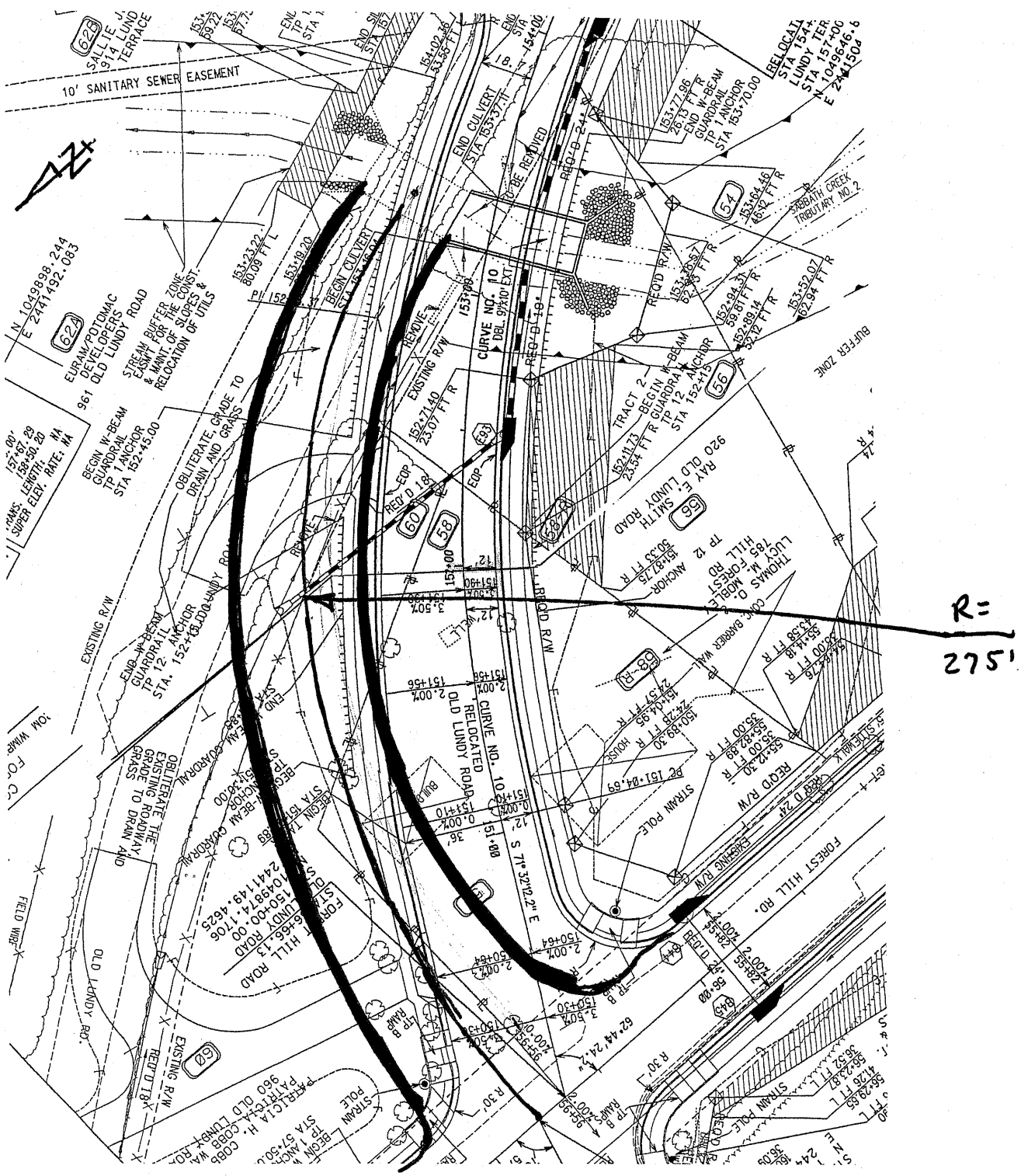

SUMMARY OF POTENTIAL COST SAVINGS

PROJECT: **WIDENING AND RECONSTRUCTION OF FOREST HILL ROAD**

Project No. STP-3213(3) and STP-3213(1) - Bibb County, Georgia

ALT. NO.	DESCRIPTION	ORIGINAL COST	ALTERNATIVE COST	INITIAL COST SAVINGS	RECURRING COST SAVINGS	TOTAL PW LCC SAVINGS
	Wimbish Road to Northside Drive/ 3-Lane Segment					
ALIGNMENT (AW)						
AW-4	Use High Density Polyethylene Pipe (HDPE) pipe in lieu of concrete RCP for urban drainage in non-traffic areas longitudinal to roadway. Retain RCP for cross traffic areas	$803,083	$518,198	$284,885		$284,885
AW-5	Use Geogrid fabric and reduce the amount of base material from xxxxx to xxxxx	$184,671		$184,671		$184,671
AW-6	Increase the side slopes from 2:1 to 1:1 by using Tensar fabric and eliminate Wall #2	$188,887	$62,389	$126,498		$126,498
SECTION (SW)						
SW-2	Use 24-inch wide curb and gutter in lieu of 30-inch	$383,087	$279,075	$104,012		$104,012
SW-3	Use MSE walls in lieu of cast in place (CIP) concrete retaining walls	$624,679	$421,351	$203,328		$203,328
SW-4	Use 11-ft-wide through lanes in lieu of 12 ft lanes	$111,868		$111,868		$111,868
SW-5	Build a reduced four lane 11 ft lanes section with 11-ft-wide lanes in lieu of the three lane section with 12-ft-wide lanes to maximize cost, increase traffic capacity, and improve LOS		$1,442,111	($1,442,111)		($1,442,111)
SW-5b	Widen Forest Hill Rd. by building a 4-lane section with 12-ft-wide lanes and reduced shoulder width (9.5 ft)		$2,053,142	($2,053,142)		($2,053,142)
SW-6	Replace the retaining wall barrier with guardrail	$62,871	$35,605	$27,266		$27,266
SW-7	Reduce the quantity of drain pipe by using more cross drains and eliminating one of the two longitudinal drains	$173,891	$43,528	$130,363		$130,363

VALUE ENGINEERING ALTERNATIVE

PROJECT: **WIDENING AND RECONSTRUCTION OF FOREST HILL RD**
Project No. STP-3213(3) and STP-3213(1) - Bibb County, Georgia
Preliminary Plan Submittal

ALTERNATIVE NO.: **AW-4**

DESCRIPTION: **USE HDPE PIPE IN LIEU OF CONCRETE RCP FOR URBAN DRAINAGE IN ALL NON-TRAFFIC AREAS**

SHEET NO.: **1 of 5**

ORIGINAL DESIGN:

The current design uses reinforced concrete storm drain pipe (RCP) for all storm drain applications, both transverse and longitudinal to the roadway.

ALTERNATIVE:

Allow the use of High Density Polyethylene Pipe (HDPE) for storm drain applications outside of the traffic areas. Use HDPE pipe for all longitudinal drainage system which do not cross the roadway. Retain RCP pipe for high traffic areas.

ADVANTAGES:

- Less construction cost
- Faster construction since the pipe is much lighter

DISADVANTAGES:

- Not currently being used by GDOT
- May need further review

DISCUSSION:

Even though HDPE pipe is being recommended in this alternative for only the longitudinal system, it meets the structural integrity to be used for all drainage applications, including cross-drains up to 60-inch diameter. The installation cost is much less for HDPE pipe since it is manufactured in 20 ft lengths rather than the RCP's 8 ft lengths.

The HDPE may require 6 inches of GAB bedding for the pipe foundation, which is included in this analysis. A suggestion is to bid both RCP and HDPE to gain a competitive comparison.

COST SUMMARY	INITIAL COST	PRESENT WORTH RECURRING COSTS	PRESENT WORTH LIFE-CYCLE COST
ORIGINAL DESIGN	$ 803,083		$ 803,083
ALTERNATIVE	$ 518,198		$ 518,198
SAVINGS (Original minus Alternative)	$ 284,885		$ 284,885

NFLOW HDPE

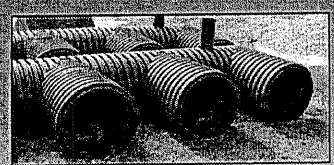

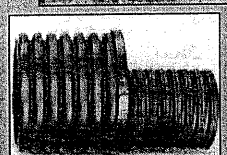

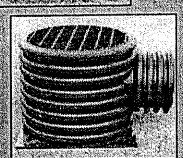

Specialty Fabrications

Southeast Culvert can provide a variety of specialty fabrications in HDPE. These structures are advantageous for complex systems such as roof drainage and underground detention manifolds. HDPE can also be fabricated into drop inlets for yard or sports field drainage problems. Each inlet is supplied with a removable grate for maintenance purposes. Fabrications can be made to order. Contact SEC for more information.

End Treatments

A variety of end treatments can be utilized on HDPE pipe outlets. Flared end sections, steel and HDPE, are typical and cost effective methods of spreading out flow and preventing scour. Safety flared end sections may also be used. Safety ends are typical for county and state right of ways. If steel end sections are used, a tapered sleeve will aid with ease of attachment. HDPE may also be beveled to match slopes on the jobsite. If a beveled end is chosen it is beneficial to pour a concrete collar to protect the pipe end. Concrete headwalls can be formed with a plastic stub so that HDPE may be joined with a split coupler. Functionality and aesthetics are important for choosing an end treatment, SEC, Inc. can provide further information concerning these issues.

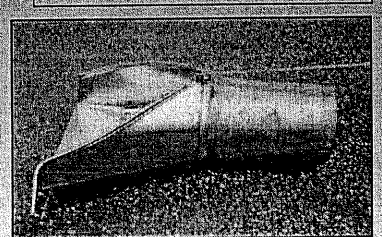

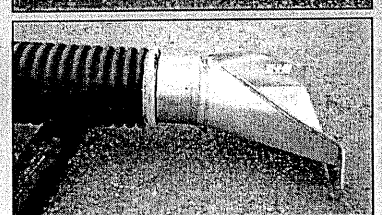

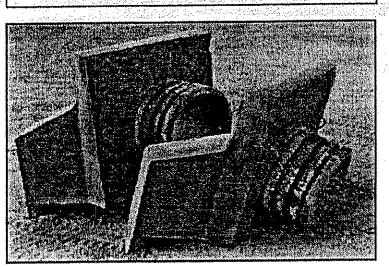

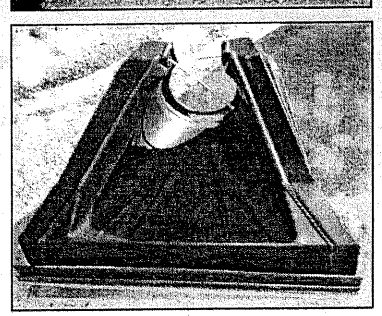

NFLOW HDPE

Durability

HDPE is a tough material that can withstand handling and installation processes. It is the most chemically inert drainage product available. NFLOW pipe is effective in a PH range from 2 to 14; no other drainage product can consistently perform in such a large PH range.

Abrasion can be the most destructive force that drainage pipes will endure, specifically the invert of the pipe. Abrasion is caused by bedload that is carried by high velocities. HDPE is highly resistant to abrasive wear due to its physical makeup and ductility.

The resistivity of soils does not effect the performance of HDPE. NFLOW pipe has an excellent record of success in both alkali and acid installations, and it exceeds expectations in harsh environments.

Structural Integrity

All flexible pipe develops structural strength through soil-pipe interaction. The soil provides the stiffness for the pipe. Flexible pipe will deflect until the soil halts deflection. The performance of the flexible pipe improves as the quality of the surrounding backfill improves.

Selection of backfill material is critical to pipe durability. Class I, II, and III are acceptable materials. Class III requires fill height limitations and care during installation. All materials should be compacted to 90% Standard Proctor Density.

Southeast Culvert, Inc. recommends following the practices of ASTM D2321 "Standard Practice for Underground Installation of Thermoplastic Pipe for Sewers and Other Gravity-Flow Applications" or contact your SEC representative for suggestions.

Applications

NFLOW pipe meets all governing specifications for AASHTO M294 Type S pipe. NFLOW is designated for storm sewer and culvert installations. It may also be utilized for underground detention. HDPE ideal for roof drainage systems due to its versatility. This product may be specified as cross drain or storm drain for any type of private or public work.

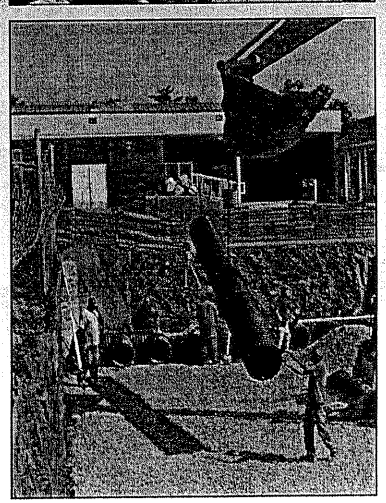

Sketch Alt. AW-4
2/5

Calculations Alt. AW.4

SEC

SOUTHEAST CULVERT, INC.

DATE 1/22/2009
JOB NAME MARTA
LOCATION
CUSTOMER
ATTN:

sheet: 3/5

FOOTAGE	SIZE	GAGE	DESCRIPTION	UNIT $	TOTAL
1	18"		HDPE Pipe	$6.95	$6.95
					$0.00
1	24"		HDPE Pipe	$11.20	$11.20
					$0.00
1	30"		HDPE Pipe	$16.02	$16.02
					$0.00
1	36"		HDPE Pipe	$21.50	$21.50
					$0.00
					$0.00
					$0.00
					$0.00
					$0.00
					$0.00
					$0.00
					$0.00
					$0.00
					$0.00

*This quotation is good for 30 days
*Sales tax not included
*Southeast Culvert, Inc accepts no reponsibility for the accuracy of these quantities
***Please contact Mark McCord with questions - 770.963.5041**

$.50/(in-DIA)-L.F. (min)

Installation $ 1/(in-DIA)-L.F. (MAX)

(20 ft./Length)

24" pipe

e.g.

$11.20 + (24" × $1/in-DIA) / LF = $35.20 / LF.

depending on pipe size and depth.

Use $.67 to $1/L.F

CALCULATIONS

PROJECT: **WIDENING AND RECONSTRUCTION OF FOREST HILL RD**
Project No. STP-3213(3) and STP-3213(1) - Bibb County, Georgia
Preliminary Plan Submittal

ALTERNATIVE NO.: AW-4

SHEET NO.: 4 of 5

Alt. Costs for HDPE pipe Installation:
see AF-2 Calculations page 3 for Installation unit prices.

See Sheet No. 3 (Alt. AW-4) for Pipe (materials Only cost)

6" GAB: $(.5' \times \underset{Avg.}{3'} \times 14{,}260') \times .076 T/CF = 1{,}626$ TN

COST WORKSHEET

PROJECT: **WIDENING OF FOREST HILL RD**
Project No. STP-3213(3) and STP-3213(1) - Bibb County, Georgia

ALTERNATIVE NO.: AW-4

SHEET NO.: 5 of 5

PROJECT ITEM		ORIGINAL ESTIMATE			PROPOSED ESTIMATE		
ITEM	UNITS	NO. OF UNITS	COST/ UNIT	TOTAL	NO. OF UNITS	COST/ UNIT	TOTAL
Original Long. Pipe Cost:							
18" Str. Dr. (CMP)	L.F.	46.84	9250	433,270			
24" Str. Dr. (CMP)	L.F.	53.16	3300	175,428			
30" Str. Dr. (CMP)	L.F.	62.79	1600	100,464			
36" Str. Dr. (CMP)	L.F.	71.61	110	7,877			
Alt. HDPE Pipe Cost:							
Installation materials only							
18" Str. Dr. (HDPE)	L.F.				9250	6.95	64,288
24" Str. Dr. (HDPE)	L.F.				3300	11.20	36,960
30" Str. Dr. (HDPE)	L.F.				1600	16.02	25,632
36" Str. Dr. (HDPE	L.F.				110	21.50	2,365
18" HDPE	L.F.				9250	18	166,500
24" HDPE	L.F.				3300	24	79,200
30" HDPE	L.F.				1600	30	48,000
36" HDPE	L.F.				110	36	3960
6" GAB	TN				1626	22	35,772
Subtotal				717,039			462,677
Markup (%) at				86,044			55,521
TOTAL				803,083			518,198

VALUE ENGINEERING ALTERNATIVE

PROJECT: **WIDENING AND RECONSTRUCTION OF FOREST HILL RD**
Project No. STP-3213(3) and STP-3213(1) - Bibb County, Georgia
Preliminary Plan Submittal

ALTERNATIVE NO.: **AW-5**

DESCRIPTION: **USE GEOGRID FABRIC AND REDUCE THE AMOUNT OF BASE MATERIAL IN THE PAVEMENT SECTION**

SHEET NO.: **1 of 3**

ORIGINAL DESIGN:

The original design indicates a standard asphalt pavement section of 1.5 in + 2 in + 2.5 in of asphalt pavement over 12 in of graded aggregate base (GAB) for roadway construction.

ALTERNATIVE:

Use geogrid fabric under the pavement section and reduce the asphalt pavement depth. This alternative is offered by Contech with two options.

ADVANTAGES:

- Reduces construction cost
- Increases project schedule

DISADVANTAGES:

- Not commonly used on GDOT projects

DISCUSSION:

By using the geogrid fabric in the construction, the department will save $153,432 with the elimination of asphalt base and $31,238.79 in cost savings by reducing the depth of GAB by one inch to an overall depth of 11 inches.

COST SUMMARY	INITIAL COST	PRESENT WORTH RECURRING COSTS	PRESENT WORTH LIFE-CYCLE COST
ORIGINAL DESIGN	$ 184,671		$ 184,671
ALTERNATIVE	$ 0		$ 0
SAVINGS (Original minus Alternative)	$ 184,671		$ 184,671

PROJECT: **WIDENING AND RECONSTRUCTION OF FOREST HILL RD**
Project No. STP-3213(3) and STP-3213(1) - Bibb County, Georgia
Preliminary Plan Submittal

ALTERNATIVE NO.: **AW-5**

SHEET NO.: 2 of 3

1.5 – 2 – 2.5 – 12 gives you 915,000 ESALs at a cost of $53.85/sy (per the costs we used on the Byron job) $85/ton for asphalt & $16/sy for 10" GAB

Option 1: Most Savings – 1.5 – 2 – 11 (remove base asphalt & 1" GAB) – gives you 984,000 ESALs at $42.81/sy

7.5% additional traffic and $11.04/sy savings (as compared to the unreinforced pavement section of 1.5" wearing, 2" binder, 2.5" base, and 12" GAB)

Option 2: Savings + ESALs – 1.5 – 2 – 12 (remove base asphalt) – gives you 1,320,000 ESALs at $44.41/sy
44% additional traffic and $9.44/sy savings (as compared to the unreinforced pavement section of 1.5" wearing, 2" binder, 2.5" base, and 12" GAB)

The ESAL numbers are based on AASHTO 1993 design method. I can convert to AASHTO 1972 (which GDOT uses), but it'll take longer. The percentages won't change much and the savings will be the same. It's just the total number of ESALs will go down.

COST WORKSHEET

PROJECT: **WIDENING OF FOREST HILL RD** ALTERNATIVE NO.: **AW-5**

Project No. STP-3213(3) and STP-3213(1) - Bibb County, Georgia

SHEET NO.: 3 of 3

PROJECT ITEM		ORIGINAL ESTIMATE			PROPOSED ESTIMATE		
ITEM	UNITS	NO. OF UNITS	COST/ UNIT	TOTAL	NO. OF UNITS	COST/ UNIT	TOTAL
ADD GEOGRD							
ELIM. ASPHALT BASE	LS			153,432			
ELIM. 1" OF GAB	LS			31,239			
(PER MANUF. CALC'S)							
Subtotal							
Markup (%) at							
TOTAL				184,671			

VALUE ENGINEERING ALTERNATIVE

PROJECT: **WIDENING AND RECONSTRUCTION OF FOREST HILL RD**
Project No. STP-3213(3) and STP-3213(1) - Bibb County, Georgia
Preliminary Plan Submittal

ALTERNATIVE NO.: **AW-6**

DESCRIPTION: **USE GEOGRID TO STEEPEN FILL SLOPES TO 1:1 TO ELIMINATE RETAINING WALL 2**

SHEET NO.: **1 of 6**

ORIGINAL DESIGN:

The current design includes Retaining Wall No. 2 that is to be constructed of reinforced concrete in order to reduce right-of-way impacts from STA. 42 + 30 to STA 44 + 95.

ALTERNATIVE:

Use geogrid and a fill slope of 1:1 and provide guardrail at the top. Eliminate Retaining Wall No. 2.

ADVANTAGES:

- Less construction cost
- Less construction time

DISADVANTAGES:

- Slightly more construction easement required

DISCUSSION:

The steeper 1:1 slopes would eliminate Retaining Wall No. 2; however, it would require approximately 10 ft of additional slope construction easement. The additional 10 ft of easement was constructed as permanent easement, now 5 ft of it could possibly be temporary easement.

COST SUMMARY	INITIAL COST	PRESENT WORTH RECURRING COSTS	PRESENT WORTH LIFE-CYCLE COST
ORIGINAL DESIGN	$ 188,887	----	$ 188,887
ALTERNATIVE	$ 62,389	----	$ 62,389
SAVINGS (Original minus Alternative)	$ 126,498	----	$ 126,498

Sketch Alt. AW-6
sheet 2/6

½ of this easem't could possibly be Temporary

Alt. Constr. Limits

Add'l slope easem't

eliminates wall #2 with 1:1 fill slopes

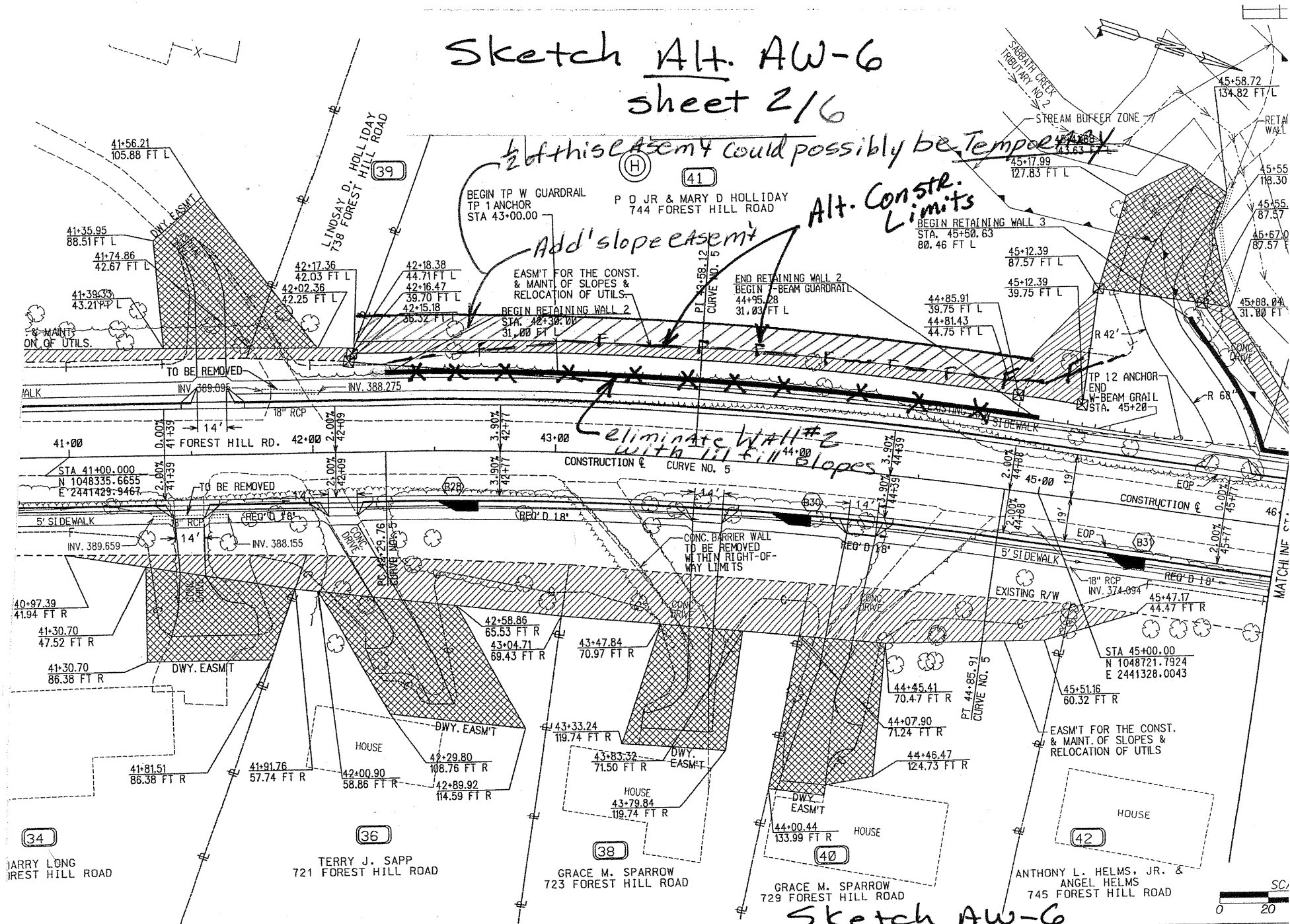

Sketch AW-6

EASEMENT FOR CONSTR
& MAINTENANCE OF SLOPES
EASEMENT FOR CONSTR OF DRIVES

STATE OF GEORGIA
DEPARTMENT OF TRANSPORTATION
OFFICE OF URBAN DESIGN

Stantec
4875 Riverside Drive
Macon, Georgia U.S.A.
31210-1117
Tel: 478.474.8100
Fax: 478.474.8933
www.stantec.com

CONSTRUCTION PL
FOREST HILL ROAD (
FROM WIMBISH RD (CS997) TO NOR

Sketch Alt. AW-6
Sh. 3/6
shows Original & Alt. design

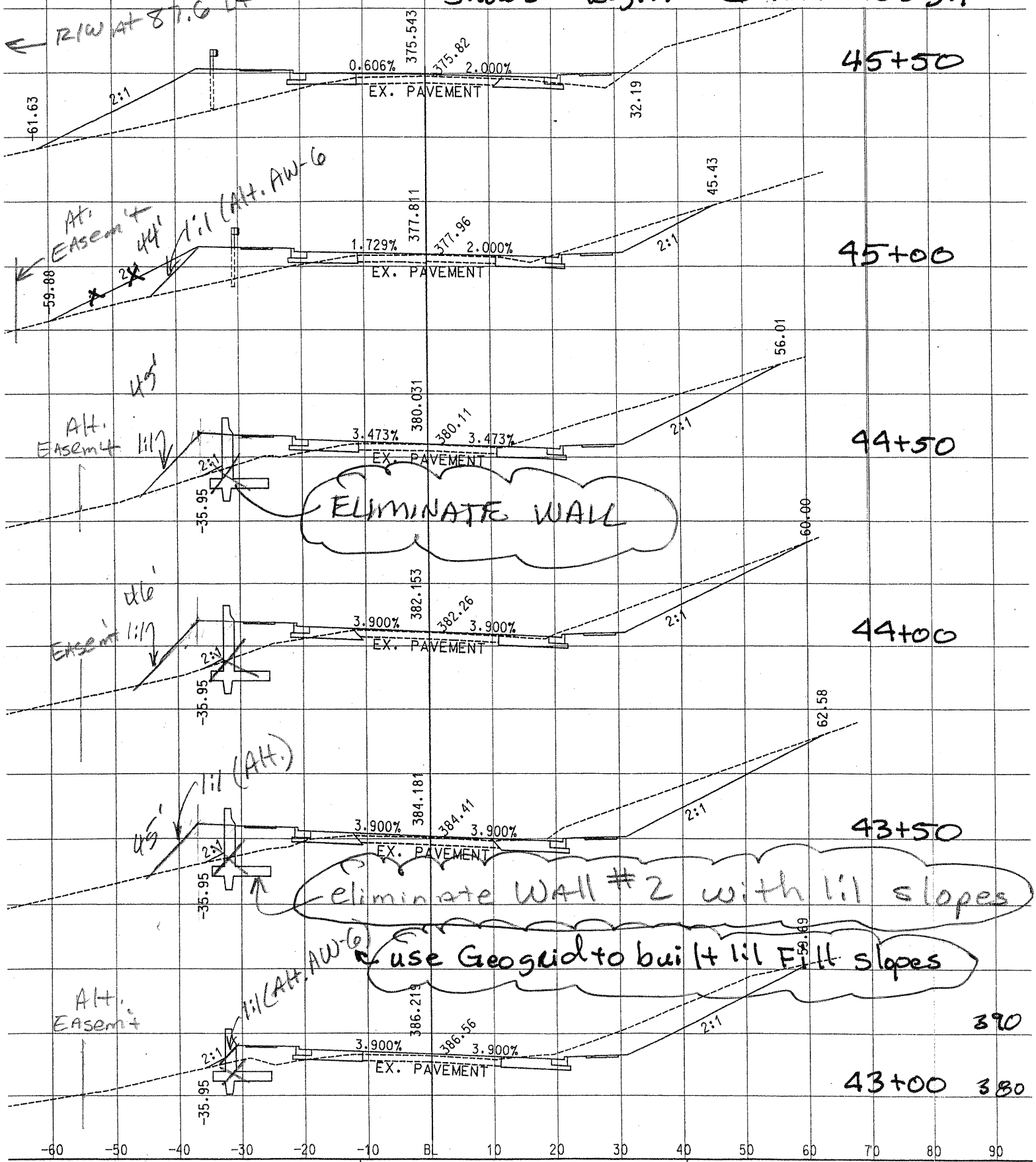

1 inch = 10 feet Vert.
1 inch = 10 feet Horiz.

← Scale

STATE OF GEORGIA
DEPARTMENT OF TRANSPORTATION

Stantec
4875 Riverside Drive
Macon, Georgia U.S.A.
31210-1117
Tel. 478.474.6100

CALCULATIONS

PROJECT: **WIDENING AND RECONSTRUCTION OF FOREST HILL RD**
Project No. STP-3213(3) and ~~STP-3213(7)~~ - Bibb County, Georgia
Preliminary Plan Submittal

ALTERNATIVE NO.: AW-6

SHEET NO.: 4 of 6

use Geogrid in order to steepen fill slopes to 1:1 in lieu of Reinf. Con. Retaining Wall No. 2. - STA 42+16 Lt. to 45+12 Lt.

10' of Add'l slope Easement would be required for 1:1 slopes.

Avg. wt. $/S.f for easement is:

→ 50% of $\frac{\$3.85}{SF}$ = $1.93/SF

Add'l slope easemt = 10' x 300' = 3000 S.F.

→ use: $15/S.F. per face of wall #2 for Geogrid Cost to stabilize a 1:1 slope

→ Add'l embankment for 1:1 slope —

$$\frac{(300' \times 10' \times 10')}{27 cf/cy} = 1,120 c.y.$$

→ Add'l "W" G'Rail = 270 L.F.

Add'l Ty 1 Anchorage

Face of Wall No. 2 S.F. (from Top of footing) $270' \times \frac{6.5'}{Avg.}$ = 1,755 s.f. ← not incl. barrier

5/6

Forest Hill Road/CR 723 - Bibb County, GA VE Study ENGINEERED Slope Alternate to C.I.P. Walls

Poole, Steve [PooleS@contechbridge.com]

Sent: Wednesday, February 11, 2009 7:15 PM

To: Hamilton, David A. (LZA); hgriffin@delonhampton.com

Cc: Poole, Steve [PooleS@contechbridge.com]

Harley and Joe: See below for the engineered slopes. Use the $12/sf number for all areas of a 15' tall (or less) wall.

Assumptions: 15' maximum vertical wall height x 270' long and 1:1 slope:

- $4/sf VPSF (vertically projected square foot of face) for materials and design
- $4/sf Backfill material
- $4/sf Labor, equipment and contractor profit
- **Budget Estimate →$12.00 total installed cost** (this is a budget number for the 1:1 slope in-place which includes the fill material)

From: Richardson, David
Sent: Wednesday, February 11, 2009 6:20 PM
To: Poole, Steve
Subject: Part 2 for DHA

Alright – I've put some margin and design costs in - $4.00/vertically projected square foot

That should mean around $12/vpsf installed – It'll be UX1000, BX1100, and Landlok 450 – smooth face, with no baskets

David L. Richardson, P.E.
Regional Tensar Specialist, Field Marketing

CONTECH Construction Products Inc.
2827 Moorings Parkway
Snellville, GA 30039
Mob: 404-969-7505 | Fax: 678-609-1574
richardsond@contech-cpi.com

The information contained in this message may be confidential and/or proprietary, and legally protected from disclosure. If the reader of this message is not the intended recipient, or an employee or agent responsible for delivering this message to the intended recipient, you are hereby notified that any retention, dissemination, distribution or copying of this communication is strictly prohibited. If you have received this communication in error, please notify us immediately by replying to the message and permanently deleting it from your computer. Thank you, CONTECH Construction Products Inc.

COST WORKSHEET

PROJECT: **WIDENING OF FOREST HILL RD**
Project No. STP-3213(3) and STP-3213(1) - Bibb County, Georgia

ALTERNATIVE NO.: AW-6

SHEET NO.: 6 of 6

PROJECT ITEM		ORIGINAL ESTIMATE			PROPOSED ESTIMATE		
ITEM	UNITS	NO. OF UNITS	COST/ UNIT	TOTAL	NO. OF UNITS	COST/ UNIT	TOTAL
Original							
Wall No 2.							
Class "A"	C.Y.	250.5	673.25	168,649			
Alt. Costs							
Geogrid	SF				1,755	15	26,325
Embankment	CY				1,120	10	11,120
"W" Grail	LF				300	16.01	4,803
Tp 1 Anchorage	EA				1	635	635
Add'l Easem't	SF				1.93	3000	5,790
R/W (easem't) subt							5,790
R/W mkup 1.48 (148%)							8,570
Constr. Subtotal				168,649			42,883
Markup (%) at 12%				20,328			5,146
TOTAL				188,887			62,389

VALUE ENGINEERING ALTERNATIVE

PROJECT:	**WIDENING AND RECONSTRUCTION OF FOREST HILL RD** *Project No. STP-3213(3) and STP-3213(1) - Bibb County, Georgia* ***Preliminary Plan Submittal***	ALTERNATIVE NO.:	**SW-2**
DESCRIPTION:	**USE 24-IN-WIDE CURB AND GUTTER IN LIEU OF 30-IN WIDE SECTION**	SHEET NO.:	**1 of 5**

ORIGINAL DESIGN:

The design uses an 8-inch x 30-inch wide curb and gutter section.

ALTERNATIVE:

Use an 8-inch x 24-inch wide curb and gutter section in lieu of the 8-inch x 30-inch.

ADVANTAGES:

- Lower construction cost
- Could save some concrete finishing time

DISADVANTAGES:

- Slightly less gutter spread, however it could be gained back by letting the gutter spread out 6 more inches into the travel lane

DISCUSSION:

It has been common practice to use 8-inch x 30-inch curb and gutter on GDOT projects, however local governments and site developments often use the 8-inch x 24-inch curb and gutter section. It stands to reason that the narrower section will save cost.

COST SUMMARY	INITIAL COST	PRESENT WORTH RECURRING COSTS	PRESENT WORTH LIFE-CYCLE COST
ORIGINAL DESIGN	$ 383,087		$ 383,087
ALTERNATIVE	$ 279,075		$ 279,075
SAVINGS (Original minus Alternative)	$ 104,012		$ 104,012

SKETCH

PROJECT: **WIDENING AND RECONSTRUCTION OF FOREST HILL RD**
Project No. STP-3213(3) and [redacted] *- Bibb County, Georgia*
Preliminary Plan Submittal 3-Lanes

ALTERNATIVE NO.: SW-2

ORIGINAL DESIGN ☐ ALTERNATIVE DESIGN ☐ BOTH ☒

SHEET NO.: 2 of 5

Original Design

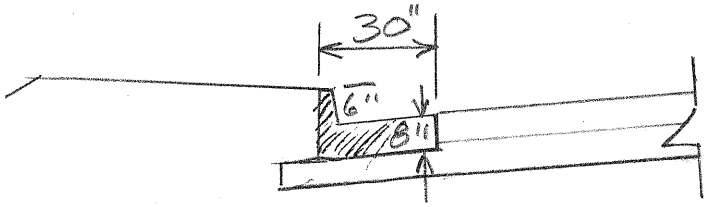

8" x 30" c&g TP2
(on the outside)

Alternate Design

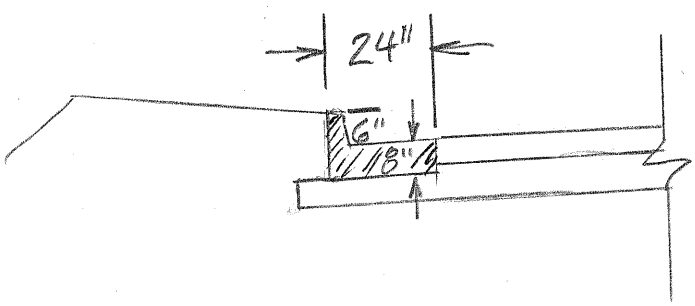

8" x 24" c&g TP2
(on the outside)

CALCULATIONS

PROJECT: **WIDENING AND RECONSTRUCTION OF FOREST HILL RD**
Project No. STP-3213(3) and [redacted] - Bibb County, Georgia
Preliminary Plan Submittal

ALTERNATIVE NO.: SW-2

SHEET NO.: 3 of 5

Length of Curb & Gutter
8"x30" Tp 2 = 21,800 L.F.

For Cost Comparison purposes the unit Prices from the Latest (Attached) Item Means Summary were used for both 8"x30" Tp2, and 8"x24" Tp2

GEORGIA DEPARTMENT OF TRANSPORTATION
ITEM MEAN SUMMARY FOR 01/2008 TO 12/2008 (Latest)
FOR SPEC YEAR 2001 CONTRACTS - (ENGLISH)

Date : January 20, 2009
Page No. : 3

Calculations
Alt. SW-2
4/5

ITEM CODE	ITEM DESCRIPTION	QUANTITY	USE	UM	MEAN	WTD AVG
424-6201	DOUBLE SURFACE TREATMENT , STN SIZE 7 & 89, GP 2 ONLY,	412213.00	6	SY	2.35	2.33
429-1000	RUMBLE STRIPS	76.00	15	EA	943.02	884.44
431-1000	GRIND CONC PVMT	547000.00	2	SY	2.39	2.16
432-0206	MILL ASPH CONC PVMT, 1 1/2 IN DEPTH	85233.00	10	SY	5.22	2.42
432-0208	MILL ASPH CONC PVMT, 2 IN DEPTH	10701.00	2	SY	5.70	5.63
432-0214	MILL ASPH CONC PVMT, 3 1/2 IN DEPTH	10850.00	4	SY	7.00	8.13
432-0218	MILL ASPH CONC PVMT, 4 1/2 IN DEPTH	7375.00	2	SY	3.87	4.51
432-5010	MILL ASPH CONC PVMT, VARIABLE DEPTH	4544747.00	100	SY	4.76	1.22
433-1000	REINF CONC APPROACH SLAB	11301.00	16	SY	156.88	158.39
433-1100	REINF CONC APPROACH SLAB, INCL CURB	1736.00	4	SY	156.99	149.63
433-1200	REINF CONC APPROACH SLAB, INCL SLOPED EDGE	2701.00	7	SY	165.22	165.44
436-1000	ASPHALTIC CONCRETE CURB -	51431.00	14	LF	10.16	8.13
437-1571	STRAIGHT GRANITE CURB, 5 IN X 17 IN, TP A	606.00	1	LF	35.00	35.00
439-0022	PLAIN PC CONC PVMT, CL 3 CONC, 10 INCH THK	10200.00	1	SY	58.00	58.00
439-0024	PLAIN PC CONC PVMT, CL 3 CONC, 11 INCH THK	1000.00	1	SY	98.50	98.50
439-0026	PLAIN PC CONC PVMT, CL 3 CONC, 12 INCH THK	50317.00	3	SY	72.50	68.53
441-0004	CONC SLOPE PAV, 4 IN	11992.00	12	SY	53.02	45.81
441-0014	DRIVEWAY CONCRETE, 4 IN TK	308.00	3	SY	30.55	28.07
441-0016	DRIVEWAY CONCRETE, 6 IN TK	6419.00	22	SY	37.67	37.00
441-0018	DRIVEWAY CONCRETE, 8 IN TK	6295.00	14	SY	45.62	45.37
441-0050	CONC SLOPE DRAIN	594.00	8	SY	79.54	78.39
441-0104	CONC SIDEWALK, 4 IN	184057.50	70	SY	46.38	34.31
441-0105	CONC SIDEWALK, 5 IN	5500.00	1	SY	26.00	26.00
441-0106	CONC SIDEWALK, 6 IN	267.00	4	SY	88.32	52.00
441-0108	CONC SIDEWALK, 8 IN	6523.00	15	SY	89.24	83.03
441-0204	PLAIN CONC DITCH PAVING, 4 IN	43095.00	18	SY	41.22	38.47
441-0301	CONC SPILLWAY, TP 1	42.00	13	EA	2062.39	2059.64
441-0302	CONC SPILLWAY, TP 2	2.00	1	EA	1500.00	1500.00
441-0303	CONC SPILLWAY, TP 3	48.00	20	EA	2098.37	1968.58
441-0304	CONC SPILLWAY, TP 4	6.00	3	EA	1900.00	1908.33
441-0600	CONC HEADWALLS	13.00	2	CY	1093.50	1085.30
441-0700	CONCRETE MEDIAN, VARB TK	544.00	2	SY	52.80	50.27
441-0740	CONCRETE MEDIAN, 4 IN	19013.00	19	SY	34.46	33.15
441-0748	CONCRETE MEDIAN, 6 IN	16830.00	31	SY	61.29	57.71
441-0754	CONCRETE MEDIAN, 7 1/2 IN	750.00	3	SY	54.45	42.71
441-0756	CONCRETE MEDIAN, 8 IN	302.00	4	SY	69.88	80.32
441-3999	CONCRETE V GUTTER	5913.00	7	LF	21.83	19.97
441-4020	CONC VALLEY GUTTER, 6 IN	4189.00	16	SY	40.16	37.95
441-4030	CONC VALLEY GUTTER, 8 IN	12937.00	20	SY	51.70	44.42
441-4050	CONC VALLEY GUTTER WITH CURB, 8 IN	5886.00	3	SY	56.56	50.94
441-5001	CONCRETE HEADER CURB, 4 IN, TP 1	350.00	1	LF	13.75	13.75
441-5002	CONCRETE HEADER CURB, 6 IN, TP 2	28214.00	16	LF	17.82	13.03
441-5003	CONCRETE HEADER CURB, 8 IN, TP 3	401.00	2	LF	19.68	18.73
441-5004	CONCRETE HEADER CURB, 10 IN, TP 4	115.00	1	LF	17.88	17.88
441-5008	CONCRETE HEADER CURB, 6 IN, TP 7	4856.00	6	LF	30.62	16.19
441-5057	CONC DOWELED INTEGRAL CURB, TP 7, INCL DOWELS	2050.00	2	LF	15.64	15.59
441-6012	CONC CURB & GUTTER, 6 IN X 24 IN, TP 2	5093.00	6	LF	27.25	16.09
441-6022	CONC CURB & GUTTER, 6 IN X 30 IN, TP 2	31879.00	11	LF	18.31	16.01
441-6216	CONC CURB & GUTTER, 8 IN X 24 IN, TP 2	2424.00	3	LF	18.81	11.43
441-6221	CONC CURB & GUTTER, 8 IN X 30 IN, TP 1	4296.00	5	LF	16.63	15.48
441-6222	CONC CURB & GUTTER, 8 IN X 30 IN, TP 2	252937.00	60	LF	22.28	15.69
441-6720	CONC CURB & GUTTER, 6 IN X 30 IN, TP 7	10914.00	2	LF	33.50	17.40

← 8" x 24"
← 8" x 30"

COST WORKSHEET

PROJECT: **WIDENING OF FOREST HILL RD**
Project No. STP-3213(3) and [redacted] - Bibb County, Georgia
3-Lane Section

ALTERNATIVE NO.: SW-2

SHEET NO.: 5 of 5

PROJECT ITEM		ORIGINAL ESTIMATE			PROPOSED ESTIMATE		
ITEM	UNITS	NO. OF UNITS	COST/ UNIT	TOTAL	NO. OF UNITS	COST/ UNIT	TOTAL
Original Cost							
8"x30" C&g, Tp 2	L.F.	21800	15.69	342,042			
Alternate Cost							
8"x24", C&g Tp 2	L.F.				21800	11.43	249,174
Subtotal				342,042			249,174
Markup (%) at				41,045			29,901
TOTAL				383,087			279,075

VALUE ENGINEERING ALTERNATIVE

PROJECT: **WIDENING AND RECONSTRUCTION OF FOREST HILL RD**
Project No. STP-3213(3) and STP-3213(1) - Bibb County, Georgia
Preliminary Plan Submittal

ALTERNATIVE NO.: **SW-3**

DESCRIPTION: **USE MECHANICALLY STABILIZED EARTH WALLS IN LIEU OF CAST-IN-PLACE CONCRETE RETAINING WALLS**

SHEET NO.: **1 of 5**

ORIGINAL DESIGN:

The design includes several cantilevered cast-in-place (CIP) concrete walls varying in height from 8 ft to 12 ft, with barrier installed at-grade.

ALTERNATIVE:

Use mechanically stabilized earth (MSE) walls with Type A coping for cut sections and guardrail for the fill sections in lieu of the CIP concrete retaining walls.

ADVANTAGES:

- Faster construction
- Reduces fill/borrow quantities
- Reduces construction cost
- Improves aesthetics

DISADVANTAGES:

- May need to revise wall details

DISCUSSION:

Replacing the CIP concrete walls with MSE walls requires the same excavation quantities. The MSE wall price includes cost for aggregate backfill, thus slightly reducing the required fill quantities. Since the MSE wall construction does not require forming, pouring, and curing, there should be a marked reduction in the construction schedule for this line item. Aesthetics is usually improved because of the higher quality control and finish options on MSE panels.

COST SUMMARY	INITIAL COST	PRESENT WORTH RECURRING COSTS	PRESENT WORTH LIFE-CYCLE COST
ORIGINAL DESIGN	$ 624,679		$ 624,679
ALTERNATIVE	$ 421,351		$ 421,351
SAVINGS (Original minus Alternative)	$ 203,328		$ 203,328

SKETCH

PROJECT: **WIDENING AND RECONSTRUCTION OF FOREST HILL RD**
Project No. STP-3213(3) and STP-3213(1) - Bibb County, Georgia
Preliminary Plan Submittal

ALTERNATIVE NO.: SW-3

ORIGINAL DESIGN ☐ ALTERNATIVE DESIGN ☐ BOTH ☒

SHEET NO.: 2 of 5

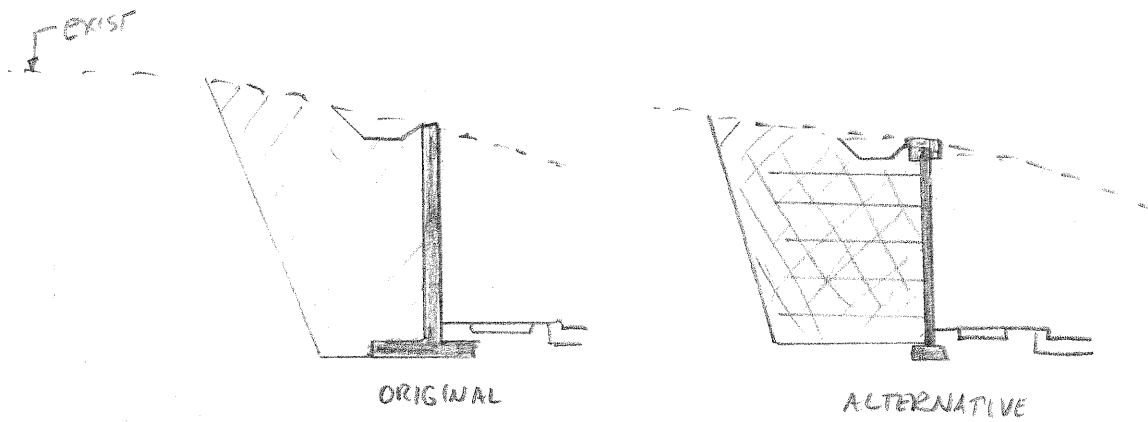

CUT SECTION

LEGEND

CUT & FILL

CUT & MSE STONE BACKFILL

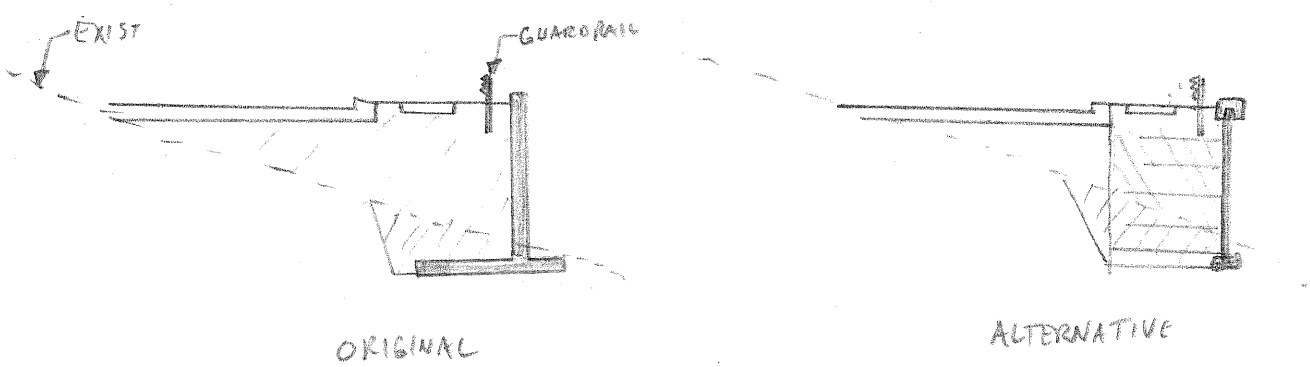

FILL SECTION

PROJECT: **WIDENING AND RECONSTRUCTION OF FOREST HILL RD**
Project No. STP-3213(3) and STP-3213(1) - Bibb County, Georgia
Preliminary Plan Submittal

ALTERNATIVE NO.: SW-3

SHEET NO.: 3 of 5

ORIGINAL

		L	H	
WALLS => 1 -	STA 29+40.67 → 31+00 [+52.39'-31' LFT]	= 185.72 FT	6'	GRUTT CUT
2 -	42+30 → 44+95.28	= 265.28'	8'	W/BARR FILL
3 -	45+50.63 → 45+88.04 → 49+00 [80.46' LFT] [31' LFT]	= 373.97'	10'	" "
4 -	64+30.79 → 64+47.09 → 64+90 [46.77' LFT] [32.25' LFT] [31' LFT]	= 64.79'	4'	GRUTT CUT
5 -	63+50 → 68+5	= 500'	5'	GRUTT F

USE ONLY CANTILEVER WALLS 2 & 3

WALL VOLUME = [(H × 1.75' STEM) + (0.75H × 1.5' FTG) + (2.0' × 1.25' KEY)] × L

WALL 2 = [8' × 1.75 + 0.75(8) × 1.5 + 2 × 1.25] 265.28' × (1/27) = 250.5 CY

WALL 3 = [12' × 1.75 + 0.75(12) × 1.5 + 2 × 1.25] 373.97' × (1/27) = 512.5 CY

Σ = 763 CY

FILL VOLUME = (9' × H) L

WALL 2 = 9 × 8 × 265.28 (1/27) = 707.41 CY

WALL 3 = 9 × 12 × 373.97 (1/27) = 1,495.9 CY

Σ = 2,203 CY

[CUT VOLUME IS THE SAME FOR BOTH]

CALCULATIONS

PROJECT: **WIDENING AND RECONSTRUCTION OF FOREST HILL RD**
Project No. STP-3213(3) and STP-3213(1) - Bibb County, Georgia
Preliminary Plan Submittal

ALTERNATIVE NO.: SW-3

SHEET NO.: 4 of 5

ALTERNATIVE

WALLS => AREA - 2 = 265.28' x 8' = 2,122.2 SF

3 = 373.97' x 12' = 4,487.6 SF

Σ = 6,610 SF [@ 50 $/SF]

COPING => 265.28 + 373.97 = 639.25' [@ 71.5 $/LF]

COST WORKSHEET

PROJECT: **WIDENING OF FOREST HILL RD**
Project No. STP-3213(3) and STP-3213(1) - Bibb County, Georgia

ALTERNATIVE NO.: SW-3

SHEET NO.: 5 of 5

PROJECT ITEM		ORIGINAL ESTIMATE			PROPOSED ESTIMATE		
ITEM	UNITS	NO. OF UNITS	COST/ UNIT	TOTAL	NO. OF UNITS	COST/ UNIT	TOTAL
RETAINING WALL-CLASS B	CY	763	673.25	513,689			
BORROW EXCAV-FILL	CY	2,203	20	44,060			
MSE WALL	SF				6610	50	330,500
- COPING	LF				639.25	71.50	45,706
Subtotal				557,749			376,206
Markup (%) at				66,930			45,145
TOTAL				624,679			421,351

VALUE ENGINEERING ALTERNATIVE

PROJECT: **WIDENING AND RECONSTRUCTION OF FOREST HILL RD**
Project No. STP-3213(3) and STP-3213(1) - Bibb County, Georgia
Preliminary Plan Submittal

ALTERNATIVE NO.: **SW-4**

DESCRIPTION: **USE 11-FT-WIDE THROUGH LANES IN LIEU OF 12-FT-WIDE LANES**

SHEET NO.: **1 of 4**

ORIGINAL DESIGN:

The current typical section includes two 12-ft-wide though lanes, one in each direction, and a 14-ft-wide median.

ALTERNATIVE:

Reduce the through lane width from 12-ft-wide to 11-ft-wide, but keep the 14-ft-wide two-way left turn lane (flush median).

ADVANTAGES:

- Lowers construction cost
- Slightly less right-of-way required

DISADVANTAGES:

- Slightly narrower through lanes

DISCUSSION:

The narrower through lanes will reduce the pavement and right-of-way cost for the project and minimize some environmental impacts on adjacent property owners. It is important to note that 24-hour truck percentage is only 2%, with a peak hour of 3%. Since the truck counts are relatively low, the design speed is 35 mph, and the through lanes are adjacent to a 14-ft-wide flush median, the 11-ft-wide lanes meet criteria and will function adequately.

COST SUMMARY	INITIAL COST	PRESENT WORTH RECURRING COSTS	PRESENT WORTH LIFE-CYCLE COST
ORIGINAL DESIGN	$ 111,868		$ 111,868
ALTERNATIVE	$ 0		$ 0
SAVINGS (Original minus Alternative)	$ 111,868		$ 111,868

SKETCH

PROJECT: **WIDENING AND RECONSTRUCTION OF FOREST HILL RD**
Project No. STP-3213(3) and [redacted] - Bibb County, Georgia
Preliminary Plan Submittal

ALTERNATIVE NO.: SW-4

ORIGINAL DESIGN ☐ ALTERNATIVE DESIGN ☐ BOTH ☒

SHEET NO.: 2 of 4

Original Typical

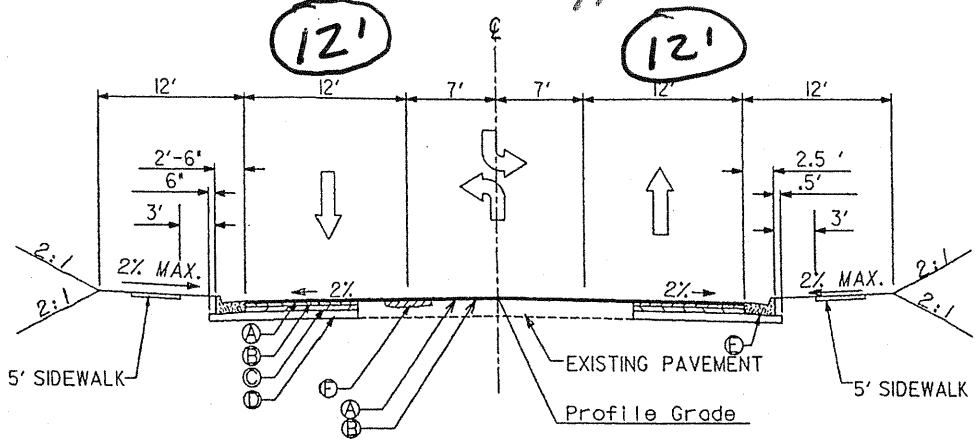

TYPICAL SECTION
FOREST HILL ROAD
(N.T.S.)

Alternate (11' Lanes) Typical

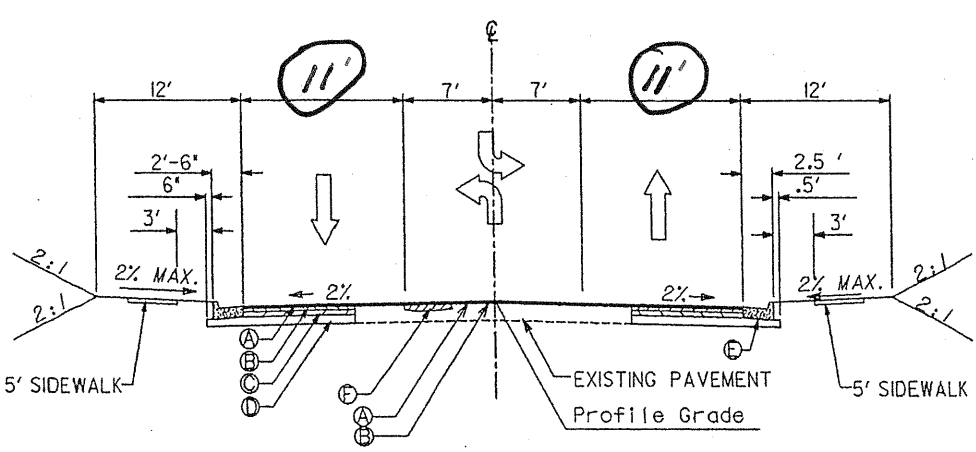

TYPICAL SECTION
FOREST HILL ROAD
(N.T.S.)

PROJECT: **WIDENING AND RECONSTRUCTION OF FOREST HILL RD**
Project No. STP-3213(3) and [redacted] - Bibb County, Georgia
Preliminary Plan Submittal

ALTERNATIVE NO.: SW-4

SHEET NO.: 3 of 4

Original Costs that will be saved under Alt. SW-4: (Length = 8770')
2' ft. of 6" Asph. Con. & 12" GAB will be saved:

→ (1½") 12.5mm Mix Asph. Conc.:

$$165 \text{ Lbs}/\text{SY} \times \frac{T}{2000 \text{ Lbs}} \times \frac{\$70.07}{T} = \$5.78/\text{SY} \leftarrow$$

→ (2") 19mm Mix Asp. Conc:

$$220 \text{ Lbs}/\text{SY} \times \frac{T}{2000 \text{ Lbs}} \times \frac{\$63.63}{T} = \$7.00/\text{SY} \leftarrow$$

→ (2½") 25mm Mix Asph. Conc.

$$275 \text{ Lbs}/\text{SY} \times \frac{T}{2000 \text{ Lbs}} \times \frac{\$63.93}{T} = \$8.79/\text{SY} \leftarrow$$

→ 12" GAB: $\left[(9 \text{ sf}/\text{SY}) \times 1' \text{(depth)} \times .076 \, T/\text{cf} \times \$22.01/T\right] =$
$\$15.06/\text{SY} \leftarrow$

(Full depth) Total = $36.63/SY

Pavement Saved in SY:

$$\frac{2' \times 8770'}{9 \text{ sf}/\text{SY}} = 1949 \text{ S.Y.} \leftarrow$$

Earthwork ≈ 1949 S.Y. × 1 y.d. = 1,949 C.Y.
(Avg)

COST WORKSHEET

PROJECT: **WIDENING OF FOREST HILL RD**
Project No. STP-3213(3) and [redacted] - Bibb County, Georgia

ALTERNATIVE NO.: SW-4

SHEET NO.: 4 of 4

PROJECT ITEM		ORIGINAL ESTIMATE			PROPOSED ESTIMATE		
ITEM	UNITS	NO. OF UNITS	COST/ UNIT	TOTAL	NO. OF UNITS	COST/ UNIT	TOTAL
Original Pavement Cost Saved:							
Full depth Section	SY	1949	36.63	71,392			
Earthwork	CY	1949	10	19,490			
Misc. (e.g. pipe, striping, clearing, eros. control, easement)	LS	LS	10,000	10,000			
Subtotal				99,882			
Markup (%) at 12				11,986			
TOTAL				111,868			

VALUE ENGINEERING ALTERNATIVE

PROJECT: **WIDENING AND RECONSTRUCTION OF FOREST HILL RD**
Project No. STP-3213(3) and STP-3213(1) - Bibb County, Georgia
Preliminary Plan Submittal

ALTERNATIVE NO.: **SW-5**

DESCRIPTION: **BUILD A REDUCED FOUR LANE SECTION IN LIEU OF THE THREE-LANE SECTION TO MAXIMIZE PROJECT VALUE**

SHEET NO.: **1 of 5**

ORIGINAL DESIGN:

The design is based on a three lane section, consisting of 12-ft-wide travel lanes, 14-ft-wide flush median, and 12-ft-wide shoulders on both sides. The total section width for the current design is 62 ft.

ALTERNATIVE:

Improve the capacity and Level of Service (LOS) in the corridor by using an optimized four lane section consisting of four 11-ft-wide travel lanes with 9.5-ft-wide shoulders on both sides. The total section width would be 63 ft. This reduced 4-lane facility keeps the footprint as close to the current design as possible, but increases the capacity of the corridor.

ADVANTAGES:

- More roadway and higher benefit for dollars invested
- Higher capacity section
- Increases Level of Service

DISADVANTAGES:

- Would have to widen the roadway major intersections for left turn lanes
- More expensive project than the three-lane concept

DISCUSSION:

The current design provides for only one through lane in each direction. The purpose of this alternative is to provide more capacity, keep the right-of-way impacts low, and maximize the value of the construction provided. It is important to point out that the ADT is 13,000 vehicles in 2010. Therefore, a median is not required initially. The design year (2030) traffic is 19,100 VPD so a 4 ft flush median could be provided later when warranted by using 12 ft through lanes in lieu of 11 ft as in Alternative SW-5. In other words, variations of this "reduced" typical section could be used to satisfy different concerns.

The width of the roadway from the outside shoulder to outside shoulder for the "reduced" 4-lane is 63 ft and the width for the proposed 3-lane is 62 ft. At the six key intersections, left turn lanes will be required, yielding a total right-of-way width of 75 ft.

This added investment of $1.4M represents approximately 12% of the total project construction cost, but could yield an increase in traffic capacity of 40 – 50%. This is an excellent value for GDOT.

COST SUMMARY	INITIAL COST	PRESENT WORTH RECURRING COSTS	PRESENT WORTH LIFE-CYCLE COST
ORIGINAL DESIGN	$ 0		$ 0
ALTERNATIVE	$ 1,442,111		$ 1,442,111
SAVINGS (Original minus Alternative)	$ (1,442,111)		$ (1,442,111)

SKETCH

PROJECT: **WIDENING AND RECONSTRUCTION OF FOREST HILL RD**
Project No. STP-3213(3) and [redacted] - Bibb County, Georgia
Preliminary Plan Submittal

ALTERNATIVE NO.: SW-5

ORIGINAL DESIGN ☐ ALTERNATIVE DESIGN ☐ BOTH ☒

SHEET NO.: 2 of 4

Original Typical

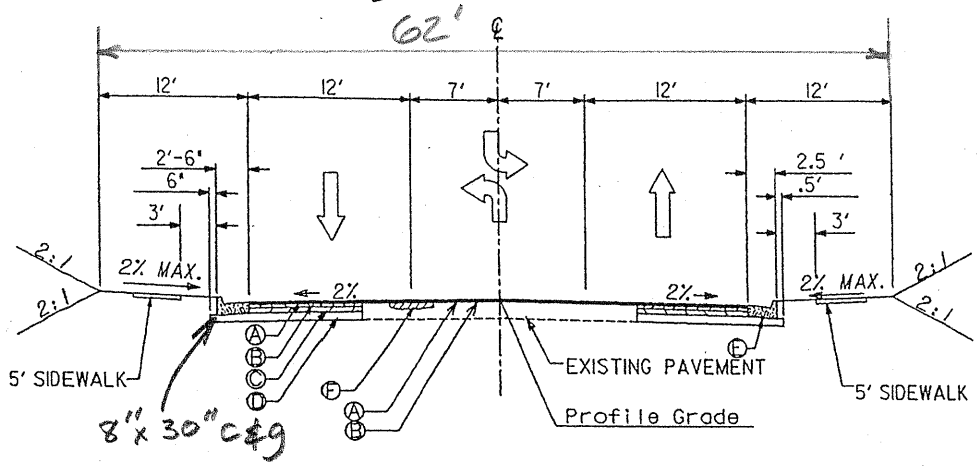

TYPICAL SECTION
FOREST HILL ROAD
(N.T.S.)

Alternate Typical

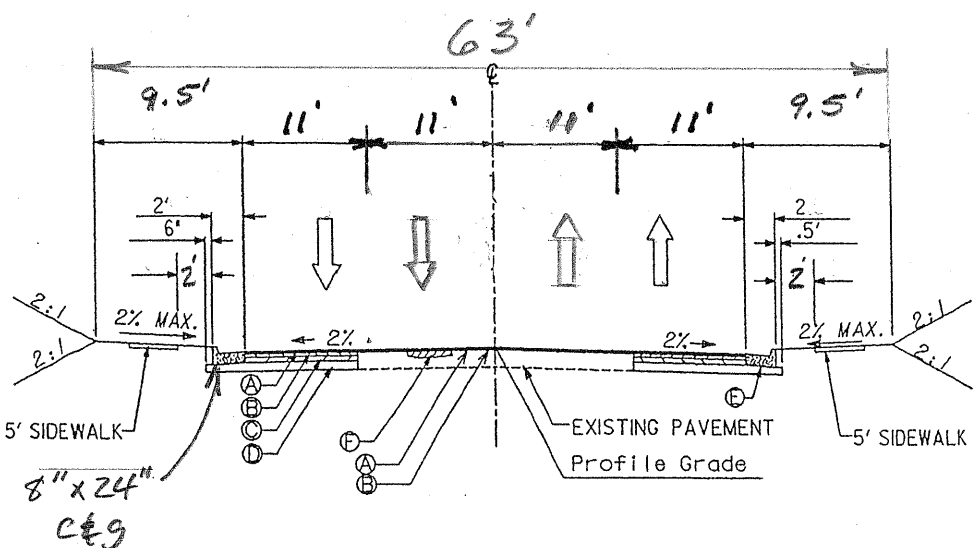

TYPICAL SECTION
FOREST HILL ROAD
(N.T.S.)

PROJECT: **WIDENING AND RECONSTRUCTION OF FOREST HILL RD**
Project No. STP-3213(3) and [redacted] - Bibb County, Georgia
Preliminary Plan Submittal

ALTERNATIVE NO.: SW-5

SHEET NO.: 3 of 4

Additional Work/Costs for Alt. design to build a "Reduced" 4-Lanes vs. 3-Lanes

→ Extra Fulldepth pavement for 4-11' thru Lanes vs. 3-Lanes (12', 14', 12').

44' − 38' = 6' of pavement wider.

Area of Extra Pavement for Thru lanes:

$$\frac{6' \times 9{,}000'}{9 sf/sy} = 6{,}000 \text{ s.y.}$$

Area of pavement required for Left-Turn Lanes at each "major" intersection Assumed there would be 6 intersections with Left-turn Lanes after reviewing the Plans. From GA. Construction Detail M-3 the Min. Design Left-turn Lane for 45 mph is is 100' taper with 250' storage.

Extra Pavement Area for Left turns

$$6 \text{ intersections} \times \left[2 \text{ EA Lt. Turns} \times \left(\left(\frac{100'}{2} \times 12'\right) + 250' \times 12'\right)\right] + \left(84' \times 12'\right) =$$

$$= 49{,}248 \text{ s.f.} = 5{,}472 \text{ s.y.}$$

Total Extra Fulldepth Pavem't = 11,472 s.y.

"Extra" foot print AREA: $11{,}472 \text{ s.y.} - \left(\frac{(12 - 9.5) \times 9000'}{9 sf/sy} \times 2 \text{ shldrs}\right)$

= 6,472 s.y. extra area of "foot print" = (1.34 ac)

Earthwork = 6,472 s.y. × 1 y.d. (Avg. Ht.) ≈ 6,500 cu. yd.

PROJECT: **WIDENING AND RECONSTRUCTION OF FOREST HILL RD**
Project No. STP-3213(3) and [redacted] - Bibb County, Georgia
Preliminary Plan Submittal

ALTERNATIVE NO.: SW-5

SHEET NO.: 4 of 4

use $750/L.F. for add'l L.F. of culvert for each Barrell.

Cost for Add'l Bridge Box Culvert:

→ 5 Barrells x 1 L.F. x $750/L.F. = $3,750

→ use $36.63/s.y. for total cost of Full depth Pavement section. This cost was computed from GDOT project unit prices see Alt. SW-4 for computations.

R/W & Easement: 11,472 s.y. x 9 sf/sy = 103,240 sf.

Weighted R/W cost/s.f. = $1.47/sf (.23) + $4.56/sf (.77) =

R/W = $3.85/s.f. (weighted)

Damages $100,000 x .1 = $10,000
Project damages — 10%

→ use 50% of $3.85/SF for Easement = $1.93/sf

Project %s for Res. & Comm. s.f.

→ R/W = 70% of 103,240 s.f. = 72,268 s.f.

Easement = 30% of 103,240 s.f. = 30,972 s.f.

COST WORKSHEET

PROJECT: **WIDENING OF FOREST HILL RD**
Project No. STP-3213(3) and STP-3213(1) - Bibb County, Georgia

ALTERNATIVE NO.: SW-5

SHEET NO.: 5 of 5

PROJECT ITEM		ORIGINAL ESTIMATE			PROPOSED ESTIMATE		
ITEM	UNITS	NO. OF UNITS	COST/ UNIT	TOTAL	NO. OF UNITS	COST/ UNIT	TOTAL
Extra Costs							
for Alt. SW-5							
Full depth Pavement	S.Y.				11,472	36.63	420,220
Earthwork	C.Y.				6,500	10	65,000
Clearing & Grubbing	AC				6,000	1.34	8,040
Extra Culverts Length	LS	(see calculations)			LS	3,750	3,750
Misc. pipe striping etc.	LS				LS	20,000	20,000
(for extra 1')							
Add'l R/W							
Land R/W	SF				3.85	72,268	278,232
Damage	LS	(see Alt. Calculations)			LS	10,000	10,000
Land Easement	SF				1.93	30,972	59,776
R/W sub total							348,008
R/W Mkup 1.48							515,052
Const R Subtotal							517,010
Markup (%) at 12% Const R							62,041
TOTAL							1,442,111

VALUE ENGINEERING ALTERNATIVE

PROJECT: **WIDENING AND RECONSTRUCTION OF FOREST HILL RD**
Project No. STP-3213(3) and STP-3213(1) - Bibb County, Georgia
Preliminary Plan Submittal

ALTERNATIVE NO.: **SW-5B**

DESCRIPTION: **BUILD A FOUR-LANE SECTION WITH 12-FT LANES AND A REDUCED SHOULDER WIDTH OF 9.5 FT**

SHEET NO.: **1 of 4**

ORIGINAL DESIGN:

The current design is a 3-lane roadway with two 12-ft through lanes (one in each direction) and a 14 ft flush median with a two-way left-turn lane.

ALTERNATIVE:

Build a 4-lane roadway with 12 ft lanes. The same pavement width could accommodate four 11 ft lanes with a 4 ft flush median.

ADVANTAGES:

- Higher traffic capacity with four lanes
- Increases Level of Service
- Safer (reduced sideswipes)

DISADVANTAGES:

- More construction cost but higher capacity and Level of Service

DISCUSSION:

This alternative was developed to include 4 ft more than the 11 ft lane concept in SW-5A. This additional 4 ft widening can serve as four 12 ft lanes or four 11 ft lanes with a 4 ft flush median to separate opposing traffic. Both the four 12 ft lanes and four 11 ft lanes with a 4 ft flush median would operate more efficiently and safer than Alt. SW-5A with four 11 ft lanes. The additional construction cost could be justified since a four-lane facility would meet future traffic demands. There would be left-turn lanes at six intersections.

COST SUMMARY	INITIAL COST	PRESENT WORTH RECURRING COSTS	PRESENT WORTH LIFE-CYCLE COST
ORIGINAL DESIGN	$ 0		$ 0
ALTERNATIVE	$ 2,053,142		$ 2,053,142
SAVINGS (Original minus Alternative)	$ (2,053,142)		$ (2,053,142)

SKETCH

PROJECT: **WIDENING AND RECONSTRUCTION OF FOREST HILL RD**
Project No. STP-3213(3) and [redacted] - Bibb County, Georgia
Preliminary Plan Submittal

ALTERNATIVE NO.: SW-5b

ORIGINAL DESIGN ☐ ALTERNATIVE DESIGN ☐ BOTH ☒

SHEET NO.: 2 of 4

Original Typical

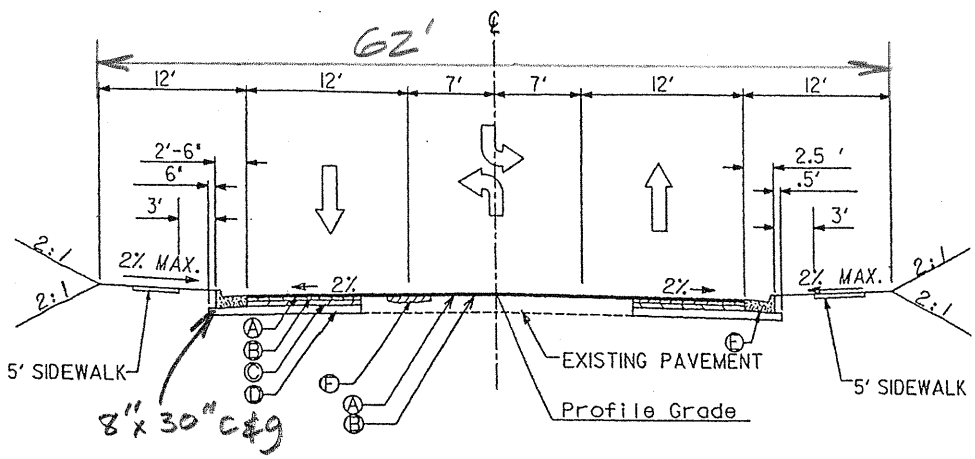

TYPICAL SECTION
FOREST HILL ROAD
(N.T.S.)

Alternate Typical (12' Lanes)

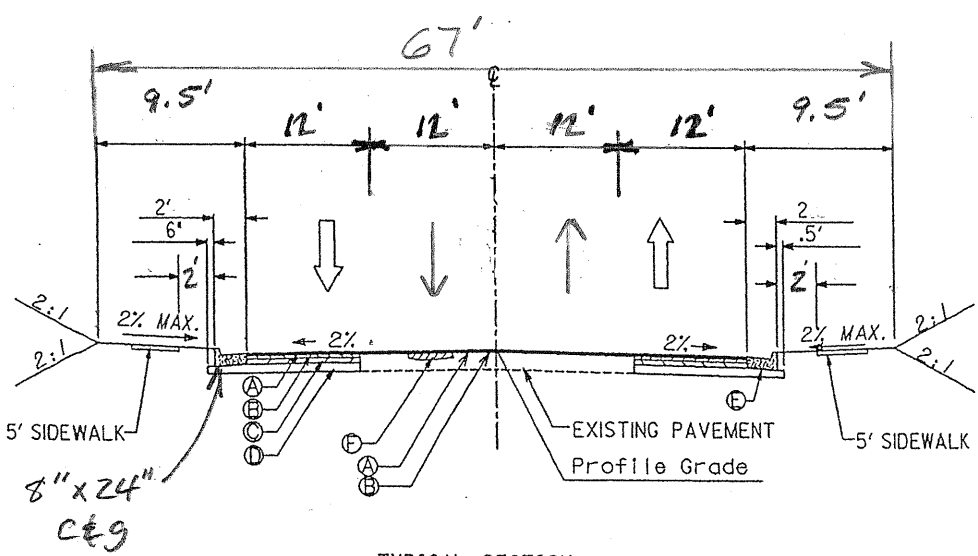

TYPICAL SECTION
FOREST HILL ROAD
(N.T.S.)

CALCULATIONS

PROJECT: w/ 4 - 12' Lanes

ALTERNATIVE NO.: SW-5b

SHEET NO.: 3 of 4

Additional Costs to SW-5A (4-11' Lanes) to use 4-12' Lanes.

Add'l Fulldepth pavement to SW-5A.

→ $\frac{4' \times 9000'}{9 sf/sy} = 4{,}000 s.y.$

Add'l R/W (4' wider than SW-5A)

→ 4' x 9000' = 36,000 s.F.

use $3.85/SF for R/W see Calculation sheets for SW-5b

→ Earthwork (Add'l to SW-5b):

1.1 x 4,000 s.y. x 1 y.d. = 4,400 cu. yd.
↑ 10% (Avg.)

→ Clearing: $\frac{36{,}000}{43{,}000} \approx 1 AC$

→ Damages ≈ 10,000

COST WORKSHEET

PROJECT: **WIDENING OF FOREST HILL RD**
Project No. STP-3213(3) and [redacted] - Bibb County, Georgia

ALTERNATIVE NO.: SW-5b

SHEET NO.: 4 of 4

PROJECT ITEM		ORIGINAL ESTIMATE			PROPOSED ESTIMATE		
ITEM	UNITS	NO. OF UNITS	COST/ UNIT	TOTAL	NO. OF UNITS	COST/ UNIT	TOTAL
Add'l Alt. Costs							
1.) (SW-5A 4-11' Lns)	LS				LS	* 1,442,111	* 1,442,111
Add'l Cost to SW-5A for 12' Lns:							
Full depth Pavement	SY				4000	36.63	146,520
Add'l Earthwork	C.Y.				4400	10	44,000
clearing & Grubbing	AC				1	6000	6000
(Misc. extra pipe etc.)	LS				LS	20,000	20,000
Add'l R/W	SF				36000	3.85	138,600
Damages	LS				LS	10,000	10,000
SW-5A subtotal							1,442,111
R/W Subtotal							148,600
R/W Markup (1.48)							219,928
Constr. Subtotal							216,520
Markup (%) at							25,983
TOTAL							2,053,142

* SW-5A costs already include the "Markup" cost.

VALUE ENGINEERING ALTERNATIVE

PROJECT: **WIDENING AND RECONSTRUCTION OF FOREST HILL RD**
Project No. STP-3213(3) and STP-3213(1) - Bibb County, Georgia
Preliminary Plan Submittal

ALTERNATIVE NO.: **SW-6**

DESCRIPTION: **REPLACE THE RETAINING WALL BARRIER WITH GUARDRAIL**

SHEET NO.: **1 of 4**

ORIGINAL DESIGN:

The retaining wall is a cast-in-place cantilever wall with Jersey Type Barrier on top.

ALTERNATIVE:

Use a flat top, cast-in-place concrete cantilevered wall, flush with the surrounding grade. Add Type W Guardrail in front of the wall, adjacent to the sidewalk.

ADVANTAGES:

- Less concrete required
- Matches the adjacent project

DISADVANTAGES:

- More fill required
- Possible stream buffer impact

DISCUSSION:

This detail is standard on the adjacent four-lane project which contains five retaining wall segments, so it makes sense to match this design.

COST SUMMARY	INITIAL COST	PRESENT WORTH RECURRING COSTS	PRESENT WORTH LIFE-CYCLE COST
ORIGINAL DESIGN	$ 62,871		$ 62,871
ALTERNATIVE	$ 35,605		$ 35,605
SAVINGS (Original minus Alternative)	$ 27,266		$ 27,266

SKETCH

PROJECT: **WIDENING AND RECONSTRUCTION OF FOREST HILL RD**
Project No. STP-3213(3) and STP-3213(1) - Bibb County, Georgia
Preliminary Plan Submittal

ALTERNATIVE NO.: SW-6

ORIGINAL DESIGN ☐ ALTERNATIVE DESIGN ☐ BOTH ☒

SHEET NO.: 2 of

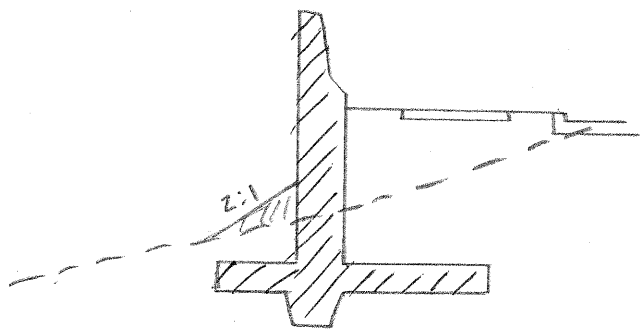

ORIGINAL

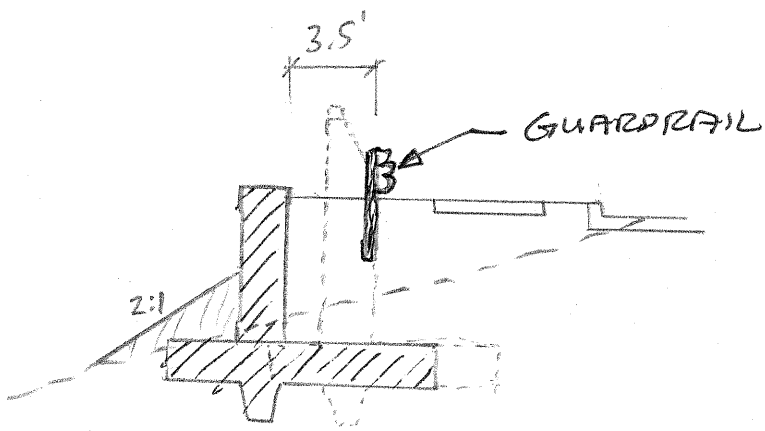

ALTERNATIVE

CALCULATIONS

PROJECT: **WIDENING AND RECONSTRUCTION OF FOREST HILL RD**
Project No. STP-3213(3) and STP-3213(1) - Bibb County, Georgia
Preliminary Plan Submittal

ALTERNATIVE NO.: SW-6

SHEET NO.: 3 of 4

WALL LENGTHS = #2 = 265.28' − 15' TC = 250.25'
BARRIER #3 = 373.97 − 15' TC = 358.97'
Σ = 30' Σ = 609.25'

T-BM => 45+20 → 44+95.28 = 24.72'
49+55 → 49+00 = 55'
Σ = 79.72'

W-BM => 49+55 → 45+88 = 367
45+20 → 42+30 = 290
Σ = 657'

BACKFILL = 3.5' x 8' x (265.28' + 373.97') 1/27 = 663 CY
(2 + 3.5) x 3 (1/2) (639.25') 1/27 = 195.3 CY
Σ 858.3 CY

EASEMENT = 3.5 x 639.25 = 2,237 SF

COST WORKSHEET

PROJECT: **WIDENING OF FOREST HILL RD**
Project No. STP-3213(3) and STP-3213(1) - Bibb County, Georgia

ALTERNATIVE NO.: SW-6

SHEET NO.: 4 of 4

PROJECT ITEM		ORIGINAL ESTIMATE			PROPOSED ESTIMATE		
ITEM	UNITS	NO. OF UNITS	COST/ UNIT	TOTAL	NO. OF UNITS	COST/ UNIT	TOTAL
BARRIER-7C	LF	609.25	68.5	41,734			
-7T	LF	30	351.66	10,550			
GUARDRAIL-TP T	LF	79.72	48.31	3,851			
-TP W	LF				657	16.01	10,519
BORROW EXCAVATION-BACKFILL	CY				858.3	20	17,166
EASEMENT ROW	SF				2,237	0.74	1655.
					MARK-UP FACTOR=		x 2.48
							4,105
Subtotal				56,135			31,790
Markup (%) at 12%				6,736			3,815
TOTAL				62,871			35,605

VALUE ENGINEERING ALTERNATIVE

PROJECT: **WIDENING AND RECONSTRUCTION OF FOREST HILL RD**
Project No. STP-3213(3) and STP-3213(1) - Bibb County, Georgia
Preliminary Plan Submittal

ALTERNATIVE NO.: **SW-7**

DESCRIPTION: **REDUCE THE QUANTITY OF LONGITUDINAL STORM DRAIN PIPE BY USING MORE CROSS DRAINS**

SHEET NO.: **1 of 3**

ORIGINAL DESIGN:

The current urban drainage design includes dual longitudinal pipes, one on each side of the roadway.

ALTERNATIVE:

Use a single storm trunk with more urban cross drains in lieu of the dual pipe system.

ADVANTAGES:

- Less construction cost
- Less construction time

DISADVANTAGES:

- More cross drains under pavement

DISCUSSION:

The current design drainage configuration uses two lines (one on each side of the roadway) of longitudinal pipes to drain the urban roadway. Connecting catch basins with cross drains in lieu of longitudinal pipes would reduce the quantity of storm drain pipes. However, it is important to note that the size of the longitudinal pipe would increase at least one pipe size to accommodate the additional flow. The savings is $130,363 minus the agreed upon amount to redesign a portion of the drainage.

COST SUMMARY	INITIAL COST	PRESENT WORTH RECURRING COSTS	PRESENT WORTH LIFE-CYCLE COST
ORIGINAL DESIGN	$ 173,891		$ 173,891
ALTERNATIVE	$ 43,528		$ 43,528
SAVINGS (Original minus Alternative)	$ 130,363		$ 130,363

PROJECT: STP-3213(3) Forest Hill Rd.

ALTERNATIVE NO.: SW-7

SHEET NO.: 2 of 3

Amount of pipe Reduced.

Alt. pipe x-drains required.

(18") 45 L.F. x 17 EA X-drains = 306'

Alt pipe increased in size to next size to handle more flow (cfs).

24" → 30" (600') + (250') = 850 L.F.

30" → 36" (600') + (250') = 850 L.F.

18" → 24" (400') + (500') + (500') = 1400 L.F.

→ 18" Pipe ($46.84) - 24" Pipe ($53.16) = + $6.32/L.F.

→ 24" Pipe ($53.16) - 30" Pipe ($62.79) = + $9.63/L.F.

→ 30" ($62.79) - 36" ($71.61) = + $8.82/L.F.

Amount of Original Pipe Eliminated:

(18") = (700 L.F.) + (300') + (800') + (550') = 2350'

(24") = (850')

COST WORKSHEET

PROJECT: STP-3213 (3)

DESCRIPTION: Forest Hill Rd.

ALTERNATIVE NO.: SW-7

SHEET NO.: 3 of 3

PROJECT ITEM		ORIGINAL ESTIMATE			PROPOSED ESTIMATE		
ITEM	UNITS	NO. OF UNITS	COST/ UNIT	TOTAL	NO. OF UNITS	COST/ UNIT	TOTAL
Original							
18" Str. Dr. Pipe	LF	2350	46.84	110,074			
24" Str. Dr. Pipe	LF	850'	53.16	45,186			
Alt. Cost							
x-drains							
18" Str. Dr. Pipe	L.F.				306	46.84	14,333
18" → 24"	L.F.				1400	6.32	8,848
24" → 30"	L.F.				850	9.63	8,186
30" → 36"	L.F.				850	8.82	7,497
Subtotal				155,260			38,864
Markup (%) at				18,631			4,664
TOTAL				173,891			43,528

SUMMARY OF POTENTIAL COST SAVINGS

PROJECT: **WIDENING AND RECONSTRUCTION OF FOREST HILL ROAD**

Project No. STP-3213(3) and STP-3213(1) - Bibb County, Georgia

ALT. NO.	DESCRIPTION	ORIGINAL COST	ALTERNATIVE COST	INITIAL COST SAVINGS	RECURRING COST SAVINGS	TOTAL PW LCC SAVINGS
	Wimbish Road to Northside Drive/ 3-Lane Segment					
BRIDGE/STRUCTURES (BW)						
BW-1	Use a conspan bridge in lieu of a box culvert	$442,766	$345,296	$97,470		$97,470
BW-2	Straighten out Retaining Wall #3 and the driveway at STA 45+50 to improve constructability and potentially reduce cost	$74,806	$68,571	$6,235		$6,235

VALUE ENGINEERING ALTERNATIVE

PROJECT: **WIDENING AND RECONSTRUCTION OF FOREST HILL RD**
Project No. STP-3213(3) and STP-3213(1) - Bibb County, Georgia
Preliminary Plan Submittal

ALTERNATIVE NO.: **BW-1**

DESCRIPTION: **USE A CONSPAN BRIDGE IN LIEU OF A BOX CULVERT**

SHEET NO.: **1 of 5**

ORIGINAL DESIGN:

STA 60+51 existing triple 10 ft by 10 ft box culvert is extended on approximately 40 ft on each side of an existing structure.

ALTERNATIVE:

Use a single span precast concrete arch such as Conspan with a 32 ft span and an 11 ft rise on both extensions. The use precast concrete headwalls and wingwalls. The base slab is to be cast-in-place concrete. The existing box is to remain with precast extensions on either end.

ADVANTAGES:

- Lowers cost
- Better hydraulics
- Faster construction

DISADVANTAGES:

- Transition from a single to a three-cell configuration could require extra details

DISCUSSION:

The single span structure improves hydraulics and is faster to construct. A transition pour will be required going from the existing three-cell box to the single arch Conspan unit. The double 9 ft by 10 ft box culvert at STA 153+26.66 is too short to take advantage of the single span concept, so it would remain cast-in-place concrete.

COST SUMMARY	INITIAL COST	PRESENT WORTH RECURRING COSTS	PRESENT WORTH LIFE-CYCLE COST
ORIGINAL DESIGN	$ 442,766		$ 442,766
ALTERNATIVE	$ 345,296		$ 345,296
SAVINGS (Original minus Alternative)	$ 97,470		$ 97,470

SKETCH

PROJECT: **WIDENING AND RECONSTRUCTION OF FOREST HILL RD**
Project No. STP-3213(3) and STP-3213(1) - Bibb County, Georgia
Preliminary Plan Submittal

ALTERNATIVE NO.: BW-1

ORIGINAL DESIGN ☒ ALTERNATIVE DESIGN ☐ BOTH ☐

SHEET NO.: 2 of 5

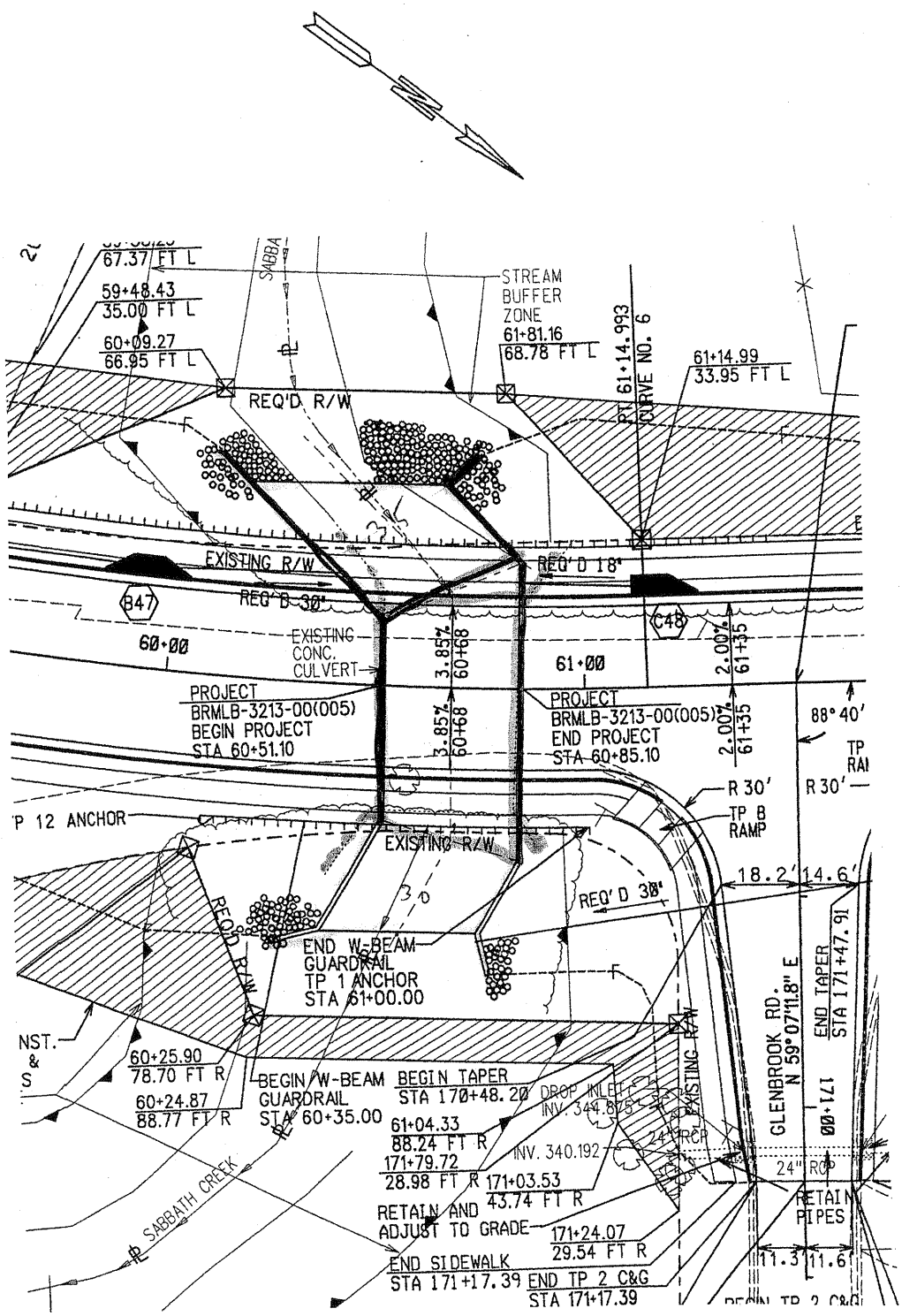

SKETCH

PROJECT: **WIDENING AND RECONSTRUCTION OF FOREST HILL RD**
Project No. STP-3213(3) and STP-3213(1) - Bibb County, Georgia
Preliminary Plan Submittal

ALTERNATIVE NO.: BW-1

ORIGINAL DESIGN ☐ ALTERNATIVE DESIGN ☐ BOTH ☒

SHEET NO.: 3 of 5

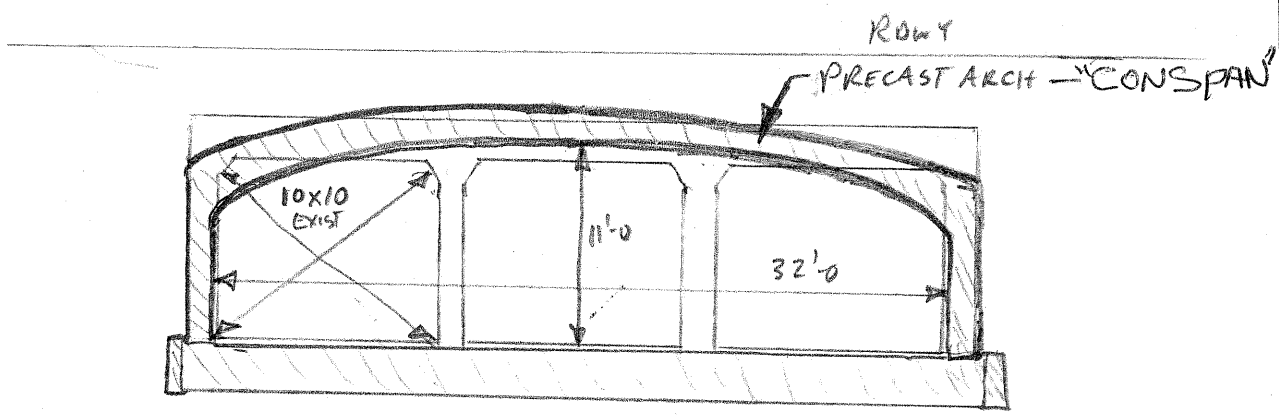

SECTION STA 60+51

PROJECT: **WIDENING AND RECONSTRUCTION OF FOREST HILL RD**
Project No. STP-3213(3) and STP-3213(1) - Bibb County, Georgia
Preliminary Plan Submittal

ALTERNATIVE NO.: BW-1

SHEET NO.: 4 of 5

ORIGINAL (CAST-IN-PLACE)

[SUMMARY OF QUANTITIES - DWG 6-2]

STA 60+51 → 60+85.1 3-10x10 118' TOTAL LENGTH (80' EXTENSION)

CONCRETE = 559 CY [@$581.59 CY]

REINF = 76,325 # [@ 0.92 $/#]

ALTERNATIVE (CONSPAN - PRECAST)

PRECAST CONCRETE THREE SIDED CULVERT (SPECIAL PROVISION 960)
32' SPAN x 11' RISE x 80' w/ PRECAST HEADWALLS & WINGWALLS
[COST FROM SUPPLIER]

PRECAST ARCHES	=>	$187,000
CIP TRANSITION	=>	$ 4,100
CIP SLAB FOUNDATION	=>	$ 87,200
INSTALLATION	=>	$ 30,000
		$ 308,300

COST WORKSHEET

PROJECT: **WIDENING OF FOREST HILL RD**
Project No. STP-3213(3) and STP-3213(1) - Bibb County, Georgia

ALTERNATIVE NO.: BW-1

SHEET NO.: 5 of 5

PROJECT ITEM		ORIGINAL ESTIMATE			PROPOSED ESTIMATE		
ITEM	UNITS	NO. OF UNITS	COST/ UNIT	TOTAL	NO. OF UNITS	COST/ UNIT	TOTAL
TRIPLE 10x10 CULVERT							
-CLASS A CONC	CY	559	581.59				
-BAR REINF	LB	76,325	0.92				
PRECAST CULVERT SYSTEM	EA				1	308,300	308,300
Subtotal				395,327			308,300
Markup (%) at 12%				47,439			36,996
TOTAL				442,766			345,296

VALUE ENGINEERING ALTERNATIVE

PROJECT: **WIDENING AND RECONSTRUCTION OF FOREST HILL RD**
Project No. STP-3213(3) and STP-3213(1) - Bibb County, Georgia
Preliminary Plan Submittal

ALTERNATIVE NO.: **BW-2**

DESCRIPTION: **STRAIGHTEN WALL 3 AND DRIVEWAY AT STA 45+50 TO IMPROVE CONSTRUCTABILITY**

SHEET NO.: **1 of 4**

ORIGINAL DESIGN:

Wall 3 is curved and starts parallel to a relocated reserse curve driveway which is perpendicular to Forest Hills Road.

ALTERNATIVE:

Straighten the wall and driveway to be 90-degrees to Forest Hills Road. Shift the end of walls 2 and 3 and continue with guardrail 40 ft to the south.

ADVANTAGES:

- Reduces impact to stream buffer
- Shortens wall and driveway
- Provides better visibility

DISADVANTAGES:

- Does not match original driveway alignment
- Increase in fill required
- Increase in grade required

DISCUSSION:

It appears that the intent of the relocated reverse curve driveway is to match the existing layout. Straightening the driveway will decrease stream buffer impacts.

COST SUMMARY	INITIAL COST	PRESENT WORTH RECURRING COSTS	PRESENT WORTH LIFE-CYCLE COST
ORIGINAL DESIGN	$ 74,806		$ 74,806
ALTERNATIVE	$ 68,571		$ 68,571
SAVINGS (Original minus Alternative)	$ 6,235		$ 6,235

SKETCH

PROJECT: **WIDENING AND RECONSTRUCTION OF FOREST HILL RD**
Project No. STP-3213(3) and STP-3213(1) - Bibb County, Georgia
Preliminary Plan Submittal

ALTERNATIVE NO.: BW-2

ORIGINAL DESIGN ☐ ALTERNATIVE DESIGN ☐ BOTH ☒

SHEET NO.: 2 of 4

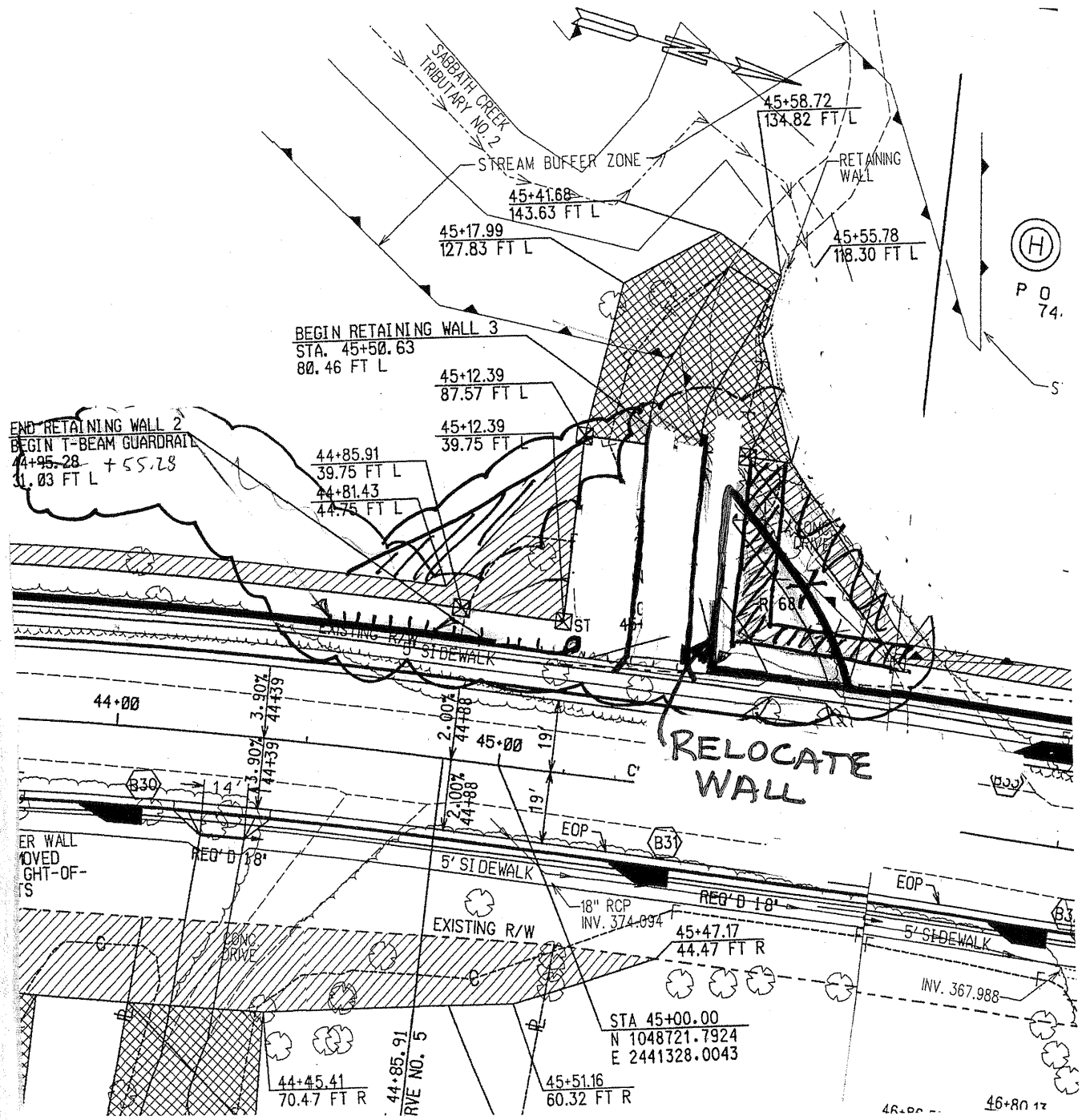

PROJECT: **WIDENING AND RECONSTRUCTION OF FOREST HILL RD**
Project No. STP-3213(3) and STP-3213(1) - Bibb County, Georgia
Preliminary Plan Submittal

ALTERNATIVE NO.: BW-2

SHEET NO.: 3 of 4

WALLS (40' SHIFT SOUTH)

WALL #2 => WALL END SHIFTS FROM STA 44+95.28 TO 44+55.28 ∴ L=40'

VOLUME = [8'x1.75 + 0.75(8)1.5 + 2x1.25] 40/27 = 37.78 CY

WALL #3 => EXISTING - BEGIN STA 45+50.63, 80.46' LFT
TO 45+88.04, 31.0' LFT

L = -62'

VOLUME = [25.5] 62/27 = 58.56 CY

PROPOSED - BEGIN STA 45+48, 80.46 LFT
TO 45+48, 31' LFT;
45+48 TO 45+88

L = 50.46'
L = 40.0'
Σ = 90.46'

VOLUME = [8'x1.75 + 0.75(8)1.5 + 2x1.25] 90.46/27
= 85.43 CY

BACKFILL

EXISTING - N = 5' x 70' x 1' (½) (1/27) = 6.48 CY
2:1

S = (60'x27')½ x 6'(½)(1/27) = 90 CY
Σ - 96.48 CY

PROPOSED - N = 40' x 5' x 1'(½)(1/27) = 3.70
42.82' x 5 x 1 (½)(1/27) = 3.96

S = (80' x 40')½ x 6'(½)(1/27) = 177.77
Σ = 185.45 CY

COST WORKSHEET

PROJECT: **WIDENING OF FOREST HILL RD**
Project No. STP-3213(3) and STP-3213(1) - Bibb County, Georgia

ALTERNATIVE NO.: BW-2

SHEET NO.: 4 of 4

PROJECT ITEM		ORIGINAL ESTIMATE			PROPOSED ESTIMATE		
ITEM	UNITS	NO. OF UNITS	COST/ UNIT	TOTAL	NO. OF UNITS	COST/ UNIT	TOTAL
RETAINING WALL - CLASS B	CY		673.25				
WALL 2		37.78	↓	25,435			
WALL 3		58.56		39,425	85.43	673.25	57,516
BACKFILL - BORROW EXCAV.	CY	96.48	20	1,930	185.45	20	3,709
Subtotal				66,791			61,225
Markup (%) at				8,015			7,347
TOTAL				74,806			68,571

PROJECT DESCRIPTION

PURPOSE AND NEED

Forest Hill Road (CR 723) is classified as an urban minor arterial that services the surrounding principal arterial system, by providing access to Vineville Avenue (US 41/SR 19), as well as Northside Drive and Riverside Drive (US 23/SR 87) via Wimbish Road. Riverside Drive and Vineville Avenue are urban principal arterials that provide primary access through the City of Macon and connects to I-75. Forest Hill Road also provides access to adjacent commercial and residential areas along the project corridor. The proposed modifications to Forest Hill Road would improve north-south mobility through Macon, while also providing safer access to the surrounding community through turn lanes and median openings at major intersections. The total length of the two design segments is slightly less than 3 miles.

Forsyth Road/US 41 to Wimbish Road – 4-Lane Segment (Metric Units) (ECC = $6.42M)

This project widens 1.21 kilometers (km) of Forest Hill Road from a two-lane rural section to a four-lane urban section from Forsyth Road/Vineville Avenue (US41/SR 19) to Wimbish Road (CS 997). The purpose of the project is to accommodate additional capacity while also improving the safety and operational efficiency of Forest Hill Road throughout the length of the project.
The Forest Hill Road intersections with Vineville Avenue, Ridge Avenue, and Wimbish Road currently operate on a LOS C, LOS D, and LOS C, respectively, for peak hour traffic volumes. In the design year 2024, for peak hour traffic volumes with no-build conditions, the Vineville Avenue intersection will operate at LOS E. The Ridge Avenue and Wimbish Road intersections will operate at LOS F.

The new urban roadway section will have a 6.0 meter raised landscaped median, two 3.3 meter travel lanes, and 3.6 meter shoulders with 1.5 meter sidewalks adjacent to the back of curb, in both directions. Auxiliary lanes are proposed at intersections as required and will include tapering at each end to meet the existing typical section. The project is being designed in metric units for a design speed of 70 km/h.

Wimbish Road to Northside Drive/ 3-Lane Segment (ECC = $8.0M)

Forest Hill Road in this segment currently operates at LOS C for peak hour traffic volumes from Wimbish Road to north of Forest Lake Drive/Newport Road. In the design year 2024, for peak hour traffic volumes with no-build conditions, Forest Hill Road will operate at LOS D between Wimbish Road and Old Lundy Road/Lokchapee Drive and LOS F from Old Lundy Road/Lokchapee Drive to north of Forest Lake Drive/Newport Road.

The intersection of Forest Hill Road and Old Lundy Road/Lokchapee Drive is currently unsignalized. In the design year 2024, for peak hour traffic volumes with no-build conditions, the intersection will operate at LOS F for peak hour traffic volumes.

Accident data for the years 1997, 1998, and 1999 indicate a large percentage of rear-end collisions. The frequency of accidents would decrease with the addition of appropriate turn lanes and increase the capacity on Forest Hill Road. The large percentage of rear-end collisions indicates the need to separate through traffic from turning movements. The construction of a two-way left-turn lane north of Wimbish Road will improve the safety and operational efficiency by separating left turning traffic from through traffic. The purpose of the project is to accommodate additional capacity while also improving the safety and operational efficiency of Forest Hill Road throughout the length of this segment.

The proposed project reconstructs Forest Hill Road from a point 400 feet north of a relocated Wimbish Road to a point approximately 656 feet south of Northside Drive for an approximate length of 1.81 miles. The beginning mile post reference is 0.73 and the ending post is 2.54 and the project is located 90% in the City of Macon and 10% in Bibb County.

Reconstruction of Forest Hill Road consists of converting the two-lane rural section to a three-lane urban section with a 14 ft two-way left-turn lane and two 12 ft travel lanes, There will be 12 ft shoulders, 5 ft sidewalks and a 2 ft grass strip on both sides of the roadway. The project also replaces the bridge culvert over Sabbath Creek (also known as Savage Creek).

VALUE ANALYSIS AND CONCLUSIONS

GENERAL

This section describes the value analysis (VA) procedure used during the VE study conducted for the Widening and Reconstruction of Forest Hill Road project by Lewis & Zimmerman Associates, Inc. The workshop was performed February 9 - 12, 2009 at the concept report stage of completion. GDOT and the Stantec design consultant provided information for the VE team to use as the basis of this study.

A systematic approach was used in the VE study, which was divided into three parts: (1) Preparation Effort, (2) Workshop Effort, and (3) Post-Workshop Effort. A task flow diagram outlining each of the procedures included in the VE study is attached for reference.

Following this description of the VA procedure, separate narratives and supporting documentation identify the following:

- VE workshop participants
- Economic data
- Cost model
- Function analysis
- Creative ideas and evaluations

PREPARATION EFFORT

Preparation for the workshop consisted of scheduling workshop participants and tasks and gathering necessary project documents for team members to review before attending the workshop. The documents listed below were used as the basis for generating VE alternatives and for determining the cost implications of the selected VE alternatives:

- STP-3213(1) - Project Concept Report – Wimbish to Northside Drive, dated September 8, 2003, prepared by GDOT
- STP-3213(1) - Wimbish to Northside Drive, Project Cost Estimate, dated December 30, 2008, prepared by Stantec
- STP-3213(3) – Project Concept Report – Forsyth Road to Wimbish Road, dated September 8, 2003, prepare by GDOT
- STP-3213(3) – Forsyth Road to Wimbish Road, Cost Estimate, dated December 30, 2008, prepared by Stantec
- Plan and Profiles Drawings, dated February 2009, prepared by Stantec

Information relating to the project's purpose and need, owner concerns, project stakeholder concerns, design criteria, project constraints, funding sources and availability, regulatory agency approval

Value Engineering Study Task Flow Diagram

Preparation Effort

Coordinate Project
- Verify Schedule
- Suggest Format for Designer Presentation
- Outline Project Responsibilities
- Outline Needed Background Data
- Define *Project Value Objectives*
- Identify Project Constraints

→

Prepare for Workshop
- Collect Project Data
- Distribute Data to Team Members
- Verify Cost Data
- Team Members Become Familiar with Project

→

Construct Cost Models
- Construct Cost Models
- Construct Graphic Function Analysis
- Outline High Cost Areas

→

LCC Model
- Process Areas
- Staffing
- Chemicals
- Energy
- User Impact

Workshop Effort

Information Phase
- Introduction by VETL
- Project Description and Presentation by Designer
- Outline Owner Requirements
- Review Project Data
- Visit Project Site (Alt.)

→

Function Identification and Analysis Phase
- Analyze Project Costs and Energy Usage
- Perform Function Analysis and FAST Diagram
- Identify High Cost and Energy Areas
- Calculate Cost/Worth Ratios
- Identify Paradigms

List Ideas Generated During Function Analysis

→

Creative Phase
- Introduction by VETL
- Creative Idea Listing:
  - Quantity of Ideas
  - Association of Ideas

Brainstorming
- Creative Thinking:
  - Group & Individual

Use Checklist for Ideas

→

Evaluation Phase
- Eliminate Impractical Ideas
- Rank Ideas with Advantages/Disadvantages
- Evaluate Alternatives (Include Non-Economic considerations: Safety, Reliability, Environment, Aesthetics, O & M, etc.)
- Select Best Ideas for Implementation

→

Development Phase
- Develop Proposed Alternatives
- Prepare Alternative Design Sketches
- Estimate Costs
- Perform Life Cycle Comparison
  - Initial Cost
  - Redesign Cost
  - O & M Cost
  - LCC Cost

→

Presentation Phase
- Summarize Findings
- Present VE Ideas to Owner/User/Designer
- Oral Presentation

Post-Workshop Effort

VE Study Report
- Prepare Preliminary VE Report
- Designer Prepares Responses to VE Report
- Owner Evaluates Recommendations

→

Implementation Phase
- Participate in Implementation Meeting with Owner/User/Designer/VE Team, as needed
- Prepare Final VE Report

→

Final Acceptance
- Redesign by Designer

requirements, and the project's schedule and costs is very important as it provides the VE team with insight about how the project has progressed to its current state.

Project cost information provided by the designers is used by the VE team as the basis for a comparative analysis with similar projects. To prepare for this exercise, the VE team leader used the cost estimate prepared by Stantec to develop cost models for the project. The models were used to distribute the total project cost among the various elements or functions of the project. The VE team used this model to identify the high-cost elements or functions that drive the project and the elements or functions providing little or no value so that the team could focus on reducing or eliminating their impact.

VALUE ENGINEERING WORKSHOP EFFORT

The VE workshop was a three-½ -day effort beginning with an orientation/kickoff meeting on Monday February 9, 2009 and concluding with the final VE Presentation on Thursday February 12, 2009. During the workshop, the VE Job Plan was followed in compliance with GDOT and FHWA guidelines for conducting a VE study. The Job Plan guided the search for alternatives to mitigate or eliminate high-cost drivers, secondary functions providing little or no value, and potential project risks. Alternatives to specifically address the owner's project concerns and enhance value by improving operations, reducing maintenance requirements, enhancing constructability, and providing missing functions were also considered. The Job Plan includes six phases:

- Information Phase
- Function Identification and Analysis Phase
- Creative/Speculation Phase
- Evaluation Phase
- Development Phase
- Presentation Phase

Information Phase

At the beginning of the study, the decisions that have influenced the project's design and proposed construction methods have to be reviewed and understood. For this reason, the workshop began with a presentation of the project by GDOT and the Stantec design team. The presentation highlighted the information provided in the documentation reviewed by the VE team before the workshop and expanded on it to include a history of the project's development and any underlying influences that caused the design to develop to its current state. During this presentation, VE team members were given the opportunity to ask questions and obtain clarification about the information provided. Following the presentation, the VE team reviewed the project documents to become familiar with site conditions and traffic considerations in order to enhance their understanding of the project.

Function Identification and Analysis Phase

Having gained some information on the project, the VE team proceeded to define the functions provided by the project, identifying the costs to provide these functions, and determining whether the value provided by the functions has been optimized. Function analysis is a means of evaluating a

project to see if the expenditures actually perform the requirements of the project or if there are disproportionate amounts of money spent on support functions. Elements performing support functions add cost to the project but have a relatively low worth to the basic function.

Function is defined as the intended use of a physical or process element. The team attempted to identify functions in the simplest manner using measurable noun/verb word combinations. To accomplish this, the team first looked at the project in its entirety and randomly listed its functions, which were recorded on Random Function Analysis Worksheets (provided in the Function Identification and Analysis section). Then the individual function(s) of the major components of the project depicted on the cost model(s) were identified.

After identifying the functions, the team classified the functions according to the following:

Abbreviation	Type of Function	Definition
HO	Higher Order	The primary reason the project is being considered or project goal.
B	Basic	A function that must occur for the project to meet its higher order functions.
S	Secondary	A function that occurs because of the concept or process selected and may or may not be necessary.
R/S	Required Secondary	A secondary function that may not be necessary to perform the basic function but must be included to satisfy other requirements or the project cannot proceed.
G	Goal	Secondary goal of the project.
O	Objective	Criteria to be met
LO	Lower Order	A function that serves as a project input.

Higher order and basic functions provide value, while secondary functions tend to reduce value. The goal of the next job phase is to reduce the impact of secondary functions and thereby enhance project value.

To further clarify the impact of the various functions, the team may assign costs to provide the functions or group of functions indicated by a specific project element using the cost estimate and cost model(s). Where possible, they seek to find the lowest cost, or worth, to perform the function. This is accomplished using published data from other sources or team knowledge obtained from working on other similar projects to establish cost goals and then comparing them to the current costs. By identifying the cost and worth of a function or group of functions, cost/worth ratios can be calculated. Cost/worth ratios greater than one indicated that less than optimum value was being provided. Those project functions or elements with high cost/worth ratios became prime targets for value improvement.

Overall, these exercises stimulated the VE team members to focus on apparently low value areas and initially channel their creative idea development in these places.

Creative/Speculation Phase

This VE study phase involved the creation and listing of ideas. Starting with the functions or project elements with high cost/worth ratios, a high absolute cost compared to other elements in the project,

and secondary functions providing little or no value and using the classic brainstorming technique, the VE team began to generate as many ideas as possible to provide the necessary functions at a lower total life cycle cost, or to improve the quality of the project. Ideas for improving operation and maintenance, reducing project risk, and simplifying constructability were also encouraged. At this stage of the process, the VE team was looking for a large quantity of ideas and free association of ideas. A Creative Idea Listing worksheet was generated and organized by the function or project element being addressed.

The GDOT project team and Stantec design team may wish to review these creative lists since they may contain ideas that were not pursued by the VE team but can be further evaluated for potential use in the design.

Evaluation Phase

Since the goal of the Creative/Speculation Phase was to conceive as many ideas as possible without regard for technical merit or applicability to the project goals, the Evaluation Phase focused on identifying those ideas that do respond to the project value objectives and are worthy of additional research and development before being presented to the owner. The selection process consisted of the VE team evaluating the ideas originated during the Creative/Speculation Phase based on the GDOT value objectives identified through conversations during the design presentation.

Based on the team's understanding of the owner's value objectives, each idea was compared with the present design concept, and the advantages and disadvantages of each idea were discussed and recorded on the Creative Idea Listing worksheets. How well an idea met the design criteria was also reviewed. Based on the results of these reviews, the VE team rated the idea by consensus using a scale of 1 to 5, with 5 or 4 indicating an idea with the greatest potential to be technically sound and provide cost savings or improvements in other areas of the project, 3 indicating an idea that provides marginal value but could be used if the project was having budget problems, 2 indicating an idea with a major technical flaw, and 1 indicating an idea that does not respond to project requirements. Generally, ideas rated 4 and 5 are pursued in the next phase and presented to the owner during the Presentation Phase.

The team also used the designation "DS" to indicate a design suggestion, which is an idea that may not have specific quantifiable cost savings but may reduce project risk, improve constructability, help to minimize claims, enhance operability, ease maintenance, reduce schedule time, or enhance project value in other ways. Design suggestions could also increase a project's cost but provide value in areas not currently addressed. These are also developed in the next phase of the VE process.

Development Phase

In this phase, each highly rated idea was expanded into a workable solution designated as a VE alternative. The development consisted of describing the current design and the alternative solution, preparing a life cycle cost comparison where applicable, describing the advantages and disadvantages of the proposed alternative solution, and writing a brief narrative to compare the original design to the proposed change and provide a rationale for implementing the idea into the design. Sketches and design calculations, where appropriate, were also prepared in this part of the study. The VE alternatives are included in the Study Results section of this report. Design suggestions include the same information

as the alternatives except that no cost analysis is performed. They too are included in the Study Results section.

Presentation Phase

The goals of the last phase of the workshop were to summarize the results of the study, to prepare draft Summary of Potential Cost Saving worksheets to hand out at the presentation, and to present the key VE alternatives and design suggestions to the Stantec design team and Central Office staff. The presentation was held on February 12, 2009 at the GDOT Central Office. The purpose of the meeting was to provide the attendees with an overview of the suggestions for value enhancement resulting from the VE study and afford them the opportunity to ask questions to clarify specific aspects of the alternatives presented. Procedures for implementing the results of the study were discussed, and arrangements were made for the reviewers of the VE report to contact the VE team in order to obtain further clarifications, if necessary.

POST-WORKSHOP EFFORT

The post-workshop portion of the VE study consisted of the preparation of this VE Study Report. Personnel from GDOT and the Stantec design team will analyze each alternative and prepare a short response, recommending incorporation of the alternative into the project, offering modifications before implementation, or presenting reasons for rejection. LZA is available at your convenience as you review the alternatives. Please do not hesitate to call on us for clarification or further information as you consider an implementation approach.

Upon completing their reviews, the owner and designer will meet and, by consensus, select VE alternatives and design suggestions to incorporate into the project.

VALUE ENGINEERING WORKSHOP PARTICIPANTS

The VE team was organized to provide specific expertise in the unique project elements involved with the Widening and Reconstruction of Forest Hill Road Project. The multidisciplinary team comprised professionals with highway design experience and a working knowledge of VE procedures. The following lists the VE team members:

Participant	Specialization	Affiliation
David Hamilton, PE, CVS, CCE, LEED [AP]	VE Team Leader/Civil	Lewis & Zimmerman Assoc.
Joe Leoni, PE	Highway Design Engineer	ARCADIS
Larry Prescott, PE	Structural Engineer	HNTB
Harley Griffin, PE	Construction Engineer	Delon Hampton

DESIGNER'S PRESENTATION

An overview of the project was presented on Monday, February 9th by representatives from the GDOT and the Stantec design team. The purpose of this meeting, in addition to being an integral part of the Information Phase of the VE study, was to bring the VE team up-to-speed regarding the overall project specifics. Additionally, the meeting afforded the owner and design team the opportunity to highlight in greater detail those areas of the project requiring additional or special attention.

VALUE ENGINEERING TEAM'S PRESENTATION

A VE presentation was conducted by the VE team on Thursday February 12, 2009 at the GDOT Central Office to review VE alternatives with the owner and representatives from the design team. Copies of the Draft Summary of Potential Cost Savings worksheet were provided to the attendees. An attendance list for the meeting is attached.

VE STUDY SIGN-IN SHEET

Project No.: STP00-3213-00(001)(003) BRMLB-3213-00(005) County: Bibb PI No.: 350520/351130/351135 Date: Feb. 9-12, 2009

NAME	EMPLOYEE ID NO.	DOT OFFICE OR COMPANY	PHONE NUMBER	EMAIL ADDRESS
Lisa L. Myers	00244168	Engineering Services	404-631-1770	lmyers@dot.ga.gov
James K. Magnus	00208161	Construction	404-631-1971	jmagnus@dot.ga.gov
Ken Werho	00258268	Traffic Operations	404-635-8144	kwerho@dot.ga.gov
HARLEY GRIFFIN		DHA	404-924-8030	hgriffin@delonhampton.com
Joe Leoni		ARCADIS	770-431-8666	Joe.Leoni@arcadis-us.com
LARRY PRESCOTT		HNTB	404-946-5743	LPRESCOTT@HNTB.com
BRAD COOK.		STANTEC.	678-432-3810	BRAD.COOK@STANTEC.COM.
Bret Gillis		Stantec	478-474-6100	BRET.GILLIS@STANTEC.COM
DAVE HAMILTON		ARCADIS	253-229-7703	DAHAMILTON@L-3A.COM
STEPHEN DANIEL		MAAI - BIBB Co.	478-755-0000	sdaniel@maai.net
Nicoe Alexander	00344258	URBAN	4)631-1717	nialexander@...
Dwayne Wilson	00887076	URBAN	4)631-1720	Dwilson@dot.ga.gov
JEFF SIMMONS	00282176	URBAN	4.631-1724	Jesimmons@dot.ga.gov
Jack Muirhead	00237324	Bridge Design	4 6311877	jmuirhead@dot.ga.gov
Doug Fadool	00928931	Eng. Services	4 6311764	dfadool@dot.ga.gov

VALUE ENGINEERING STUDY AGENDA

Lewis & Zimmerman Associates, Inc. (LZA) will facilitate a 30-hour value engineering (VE) study on the Concept Report Submittal of the **Widening and Reconstruction of Forest Hill Road**, STP-3213(1) and STP-3213(3), P.I. No. 350520 and 351130/351135, Bibb County, Georgia. The Georgia Department of Transportation (GDOT) project management and design team will be available to formally present the project at the beginning of the workshop; attend a presentation of the VE alternatives at the conclusion of the VE study; and be available to answer questions during the VE study effort.

The VE study will follow the outline described below and be conducted February 9 - 12, 2009 at the offices of:

GDOT
600 West Peachtree Street, 5th Floor
Atlanta, Georgia 30308
Conference Room 5CR1L2

The point-of-contact is Ms. Lisa Myers, GDOT Value Engineering Coordinator, who may be reached at 404-631-1770.

VE STUDY AGENDA

Monday, February 9, 2009

8:00 am - 9:00 am **VE Team Members Arrive and Review Documents**

9:00 am – 11:00 am **Owner's/Designer's Presentation**

GDOT and the Stantec design consultants will present information concerning the project including, but not limited to: the Purpose and Need for the project, rationale for design; criteria for specific areas of study, project constraints and the reasons for design decisions.

11:00 am – 12:00 noon **VE Team Reviews Project Documents**

12:00 noon - 2:00 pm **Lunch and Site Visit**

2:00 pm - 3:00 pm **Information Phase**

The VE team will continue their familiarization with the cost models and project data for each area of study. The cost models will be refined, as necessary. The VE team will define the function of each project element or system in the cost model, select the primary or basic functions, and determine the worth, or least cost, to provide the function. Cost/worth or value index ratios will be calculated, and

high cost/low worth areas for study identified. In addition, the VE team will continue defining the function of each element/system to gain a thorough understanding of the projects' Purpose and Need.

3:00 pm – 4:00 pm **Function Analysis**

The team will identify all project functions required to meet the established purpose and need. Functions will be identified as to basic, required secondary, secondary, or project goals.

4:00 pm - 5:00 pm **Speculation Phase**

The VE team will conduct a brainstorming session and list as many ideas as possible for consideration. The aim is to obtain a large quantity of ideas through free association, by eliminating roadblocks to creativity and deferring judgment.

Tuesday, February 10, 2009

8:00 am - 10:00 am **Speculation Phase (cont.)**

The VE team will continue the brainstorming exercise to capture ideas to improve the project in terms of initial and life cycle cost, technical aspects, schedule, and constructibility issues.

10:00 am – 12:00 noon **Analysis Phase**

The VE team will analyze the ideas listed in the creative phase and select the best ideas for further development.

12:00 noon - 1:00 pm **Lunch**

1:00 pm - 5:00 pm **Development Phase**

VE team will develop creative ideas into alternate design solutions. Initial and life cycle cost estimates comparing original and proposed alternatives will be prepared. Selected alternatives for change will be developed and supported with sketches, calculations and written substantiation.

Wednesday, February 11, 2009

8:00 am – 12:00 noon **Development Phase (cont.)**

12:00 noon - 1:00 pm **Lunch**

1:00 pm - 5:00 pm **Development Phase (cont.)**

Upon completion of the Development Phase, the VE team leader will prepare the summary worksheets based on the alternatives developed by the VE team. The summary worksheets form the basis of the informal oral presentation to be made to GDOT, local representatives, and the Stantec design team representatives. The team will review all documentation and prepare for the presentation.

Thursday, February 12, 2009

8:00 am - 9:00 am	**Development Phase and Preparation for Presentation**
9:00 am – 12:00 noon	**Presentation Phase**

Upon completion of the Development Phase, the VE team leader will prepare the summary worksheets based on the alternatives developed by the VE team. The summary worksheets form the basis of the informal oral presentation to be made to GDOT, local representatives, and the design team representatives. The team will review all documentation and prepare for the presentation.

Noon - Adjourn

POST-STUDY PHASE

Upon completion of the value engineering study, the VE team leader will prepare the Value Engineering Study Report and submit it to GDOT. The report will include the following material:

- Project description and design concept of project
- Cost models and graphic function analysis worksheets
- Value engineering alternatives: original design and proposed alternatives, including sketches, design calculations and initial and life cycle estimates
- Potential contract savings (capital construction and life cycle costs)

The GDOT design team will independently review the VE alternatives and classify them as accepted, accepted with modifications, needs further study, or rejected—accompanied by the reasons for rejection. A meeting with all stakeholders will then be convened to decide which VE alternatives to implement.

VE TEAM MEMBERS

David Hamilton, PE, CVS, CCE, LEED AP	VE Team Leader/Civil	Lewis & Zimmerman Assoc.
Joe Leoni, PE	Highway Design Engineer	ARCADIS
Larry Prescott, PE	Structural Engineer	HNTB
Harley Griffin, PE	Construction Engineer	Delon Hampton

ECONOMIC DATA

The comparisons of life cycle costs between the VE alternatives and the current design solutions were performed on the basis of discounted present worth. To accomplish this, the VE team developed economic criteria to use in its calculations based on information gathered from GDOT and the Stantec design team. The following parameters were used when calculating discounted present worth:

Year of Analysis:	2009
Construction Start Date:	2010
Construction Completion Date:	2011
Planning Period (n):	30 years starting in 2009
Net Discount Rate (i):	3.1%
Escalation Rate (e):	0%
Annual Present Worth Factor (PWF) (n, i, e)	19.3495

When computing capital costs, direct material, labor and equipment costs are marked up using a composite markup of 12% that includes:

Construction Administration & Engineering	12%

COST MODEL

The Widening and Reconstruction of Forest Hill Road Project will greatly improve safety and Level of Service along the alignment in this busy area of Bibb County while reducing accidents caused by slow traffic and left turns in the corridor. To achieve these benefits, a considerable investment in the infrastructure is required, including construction of new ramps, signage, structures, and acquisition of the needed right-of-way. The total construction cost of the project is estimated at approximately $14.4M, plus right-of-way, and utilities totaling $9.9M. Since the right-of-way cost is a substantial portion of the cost of the required construction, the total width of the section, profile, and alignment must be reviewed carefully to ensure proper investments are made.

Project Cost

The VE team prepared a Pareto Chart, or Cost Histogram, for the project that follows this page. This Cost Histogram displays the major construction elements identified in the cost estimate prepared by the designer in descending order of magnitude and thus identifies the high cost areas in the project. The high cost elements provide the VE team with one focus for its work during the study.

From this analysis, it can be seen that the right-of-way impacts are a major component of the overall project cost and appear to be driven by the section width of the road. Other cost components such as base, paving, and embankment appear prudent for a road widening project, but optimization measures can be applied.

COST HISTOGRAM

PROJECT: **WIDENING AND RECONSTRUCTION OF FOREST HILL RD**
Project No. STP-3213(3) and STP-3213(1) - Bibb County, Georgia

3-LANE SECTION - STP-3213(3)	COST	PERCENT	CUM. PERCENT
Roadway	5,532,367	69.18%	69.18%
Roadway Lighting	1,323,222	16.55%	85.73%
Landscape and Irrigation	481,998	6.03%	91.76%
Water Distribution ans Sanitary Sewer	277,460	3.47%	95.23%
Erosion Control	191,203	2.39%	97.62%
Traffic Signals	102,130	1.28%	98.90%
Traffic Signs and Striping	88,282	1.10%	100.00%
Construction Subtotal	***7,996,662***	100.00%	
Engineering and Construction Inspection	0		
Right of Way	0		
Reimbursable Utilities			
TOTAL CONSTRUCTION & RIGHT OF WAY	**$ 7,996,662**	Comp Markup:	

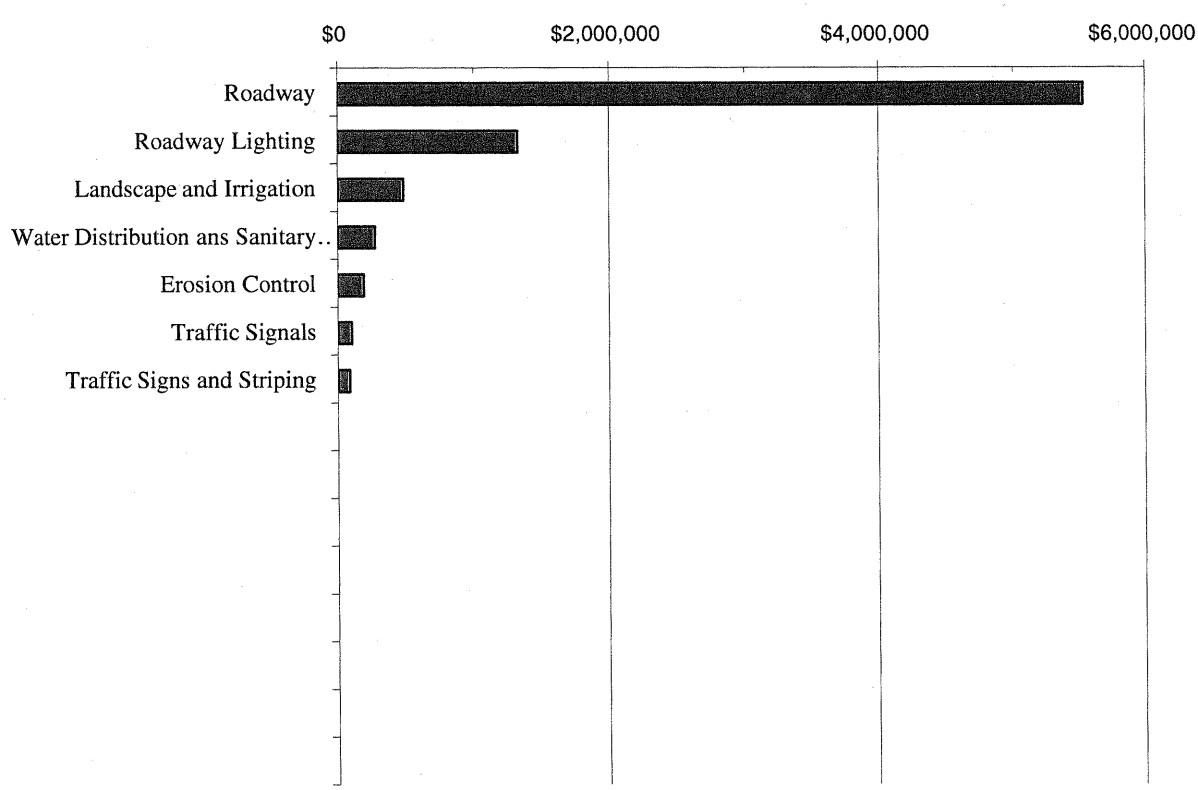

COST HISTOGRAM

PROJECT: **WIDENING AND RECONSTRUCTION OF FOREST HILL RD**
Project No. STP-3213(3) and STP-3213(1) - Bibb County, Georgia

4-LANE SECTION - STP-3213(1)	COST	PERCENT	CUM. PERCENT
Roadway	5,153,617	80.27%	80.27%
Roadway Lighting	437,463	6.81%	87.08%
Landscaping and Irrigation	341,846	5.32%	92.41%
Traffic Signals	328,063	5.11%	97.52%
Erosion Control	105,092	1.64%	99.15%
Traffic Signs and Striping	54,425	0.85%	100.00%
Construction Subtotal	***6,420,506***	100.00%	
Engineering and Construction Inspection	0		
Right of Way	9,969,485		
Reimbursable Utilities			
TOTAL CONSTRUCTION & RIGHT OF WAY	**$ 16,389,991**	Comp Markup:	

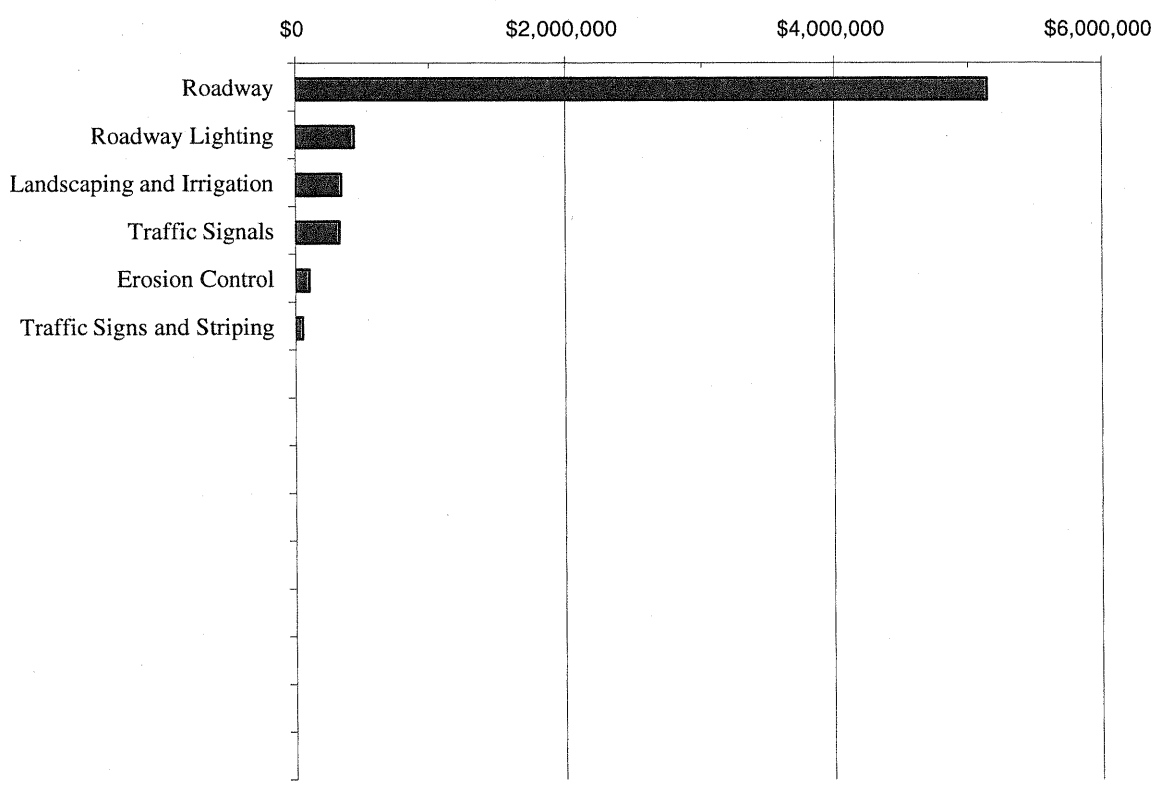

FUNCTION ANALYSIS

A function analysis was performed to (1) understand the project purpose and need, (2) define the requirements for each project element, (3) ensure a complete and thorough understanding by the VE team of the basic function(s) needed to attain the given project purpose and need, (4) identify other public goals, and (5) identify secondary functions that should be addressed by the VE team. The Random Function Analysis worksheet completed by the team for the project in its entirety and the various elements follow.

The key issues that evolved from the function analysis session were the concurrence of the project needs and purpose. The basic function of the project is to "Increase Capacity" and "Improve Level of Service." However, "Reduce Accidents" and "Improve Access" are key required project goals that must be included in the project. Because of the nature of the construction, the functions of "Control Budget" and "Protect Environment" are client driven goals.

The results of the function analysis are as follows:

- The project need and purpose are justified;
- Accidents must be reduced in this segment by the addition of the third lane and proposed alignment/profile changes

RANDOM FUNCTION ANALYSIS

PROJECT: **WIDENING AND RECONSTRUCTION OF FOREST HILL RD** SHEET NO.: **1 of 1**
Project No. STP-3213(3) and STP-3213(1) - Bibb County, Georgia

DESCRIPTION	FUNCTION		
	VERB	NOUN	KIND
Total Project Purpose and Need	***Increase***	***Capacity***	***B***
	Improve	Operation	G
	Improve	***LOS***	***B***
	Reduce	Accidents	HO
	Improve	Drainage	RS
	Light	Roadway	S
	Beautify	Roadway	G
	Control	Traffic	RS
	Control	Access	RS
	Improve	Sight-Distance	RS
	Improve	Safety	G
	Reduce	Conflicts	G
	Retain	Fill	RS
	Cross	Streams	RS
	Improve	Geometrics	RS
	Accommodate	Pedestrians	RS
	Reuse	Facilities	RS
	Relocate	Utilities	RS
	Upgrade	Signals	RS
	Separate	Traffic	RS
	Upgrade	Side-Streets	RS
	Calm	Traffic	G
	Meet	Schedule	G
	Control	Budget	G
	Protect	Environment	G
	Meet	Demand	RS

Function defined as: Action Verb, Measurable Noun

Kind: B = Basic; S = Secondary; RS = Required Secondary; HO = Higher Order; LO = Lower Order; G = Goal

CREATIVE IDEA LISTING AND EVALUATION OF IDEAS

During the Creative/Speculation Phase, numerous ideas were generated for the Widening and Reconstruction of Forest Hill Road Project using conventional brainstorming techniques. These ideas were recorded and are shown with their corresponding ranking on the attached Creative Idea Listing Worksheets. For the convenience of tracking an idea through the VE process, the ideas were grouped into the following categories and numbered according to the order in which they were conceived. The following letter prefixes were used to identify the categories.

PROJECT ELEMENT	PREFIX
(Wimbish to Northside – 3 Lane Section)	
Alignment	AW
Section	SW
Bridge Structures/Walls	BW
(Forsyth Road/US 41 to Wimbish - 4-Lane Section)	
Alignment	AF
Section	SF
Bridge Structures/Walls	BF

The ideas were ranked on a qualitative scale of 1 to 5 on how well the VE team believed the idea met the project purpose and need criteria. To assist the team in evaluating the creative ideas, the advantages and disadvantages of each new idea compared to the existing design solution were discussed based on the owner's value objectives for the project. The following are the top value objectives for this project:

- Minimize accidents in the corridor
- Level of Service should be acceptable at the design year
- Right-of-way cost should be optimized to fit the roadway section
- Life cycle cost should optimized through durable design features

After discussing each idea, the team evaluated the ideas by consensus. This produced 24 ideas rated 4 or 5 to research and develop into formal VE alternatives and 1 idea to develop as design suggestions to be included in the Study Results section of the report. Highly rated ideas that were not developed further may have been combined with another related idea or discarded as a result of additional research indicating the concept as not being cost effective or technically feasible. The reader is encouraged to review the Creative Idea Listing and Evaluation worksheet since it may suggest additional ideas that can be applied to the design.

CREATIVE IDEA LISTING

PROJECT:	**WIDENING AND RECONSTRUCTION OF FOREST HILL RD** *Project No. STP-3213(3) and STP-3213(1) - Bibb County, Georgia*	SHEET NO.: **1 of 2**

NO.	IDEA DESCRIPTION	RATING
	Forsyth Road/US 41 to Wimbish Road – 4-Lane Segment (Metric Units)	
ALIGNMENT (AF)		
AF-1	Re-use more of the existing right-of-way and follow the existing alignment from STA 5+340 to STA 5+700.	2
AF-2	Allow HDPE pipe for drains in lieu of RCP only.	4
AF-3	Allow Geogrid fabric for the pavement section and reduce the amount of base material.	5
AF-4	Move the drainage outfall away from the building at STA 6+015.	5
SECTION (SF)		
SF-1	Place sidewalk only on one side of the street.	3
SF-2	Use 18ft wide raised median in lieu of 20ft wide.	4
SF-3	Use 24 inch wide curb and gutter in lieu of 30 inch.	4
SF-4	Use Geogrid, increase side slopes to 1:1, and save right-of-way.	5
SF-5	Use MSE walls in lieu of CIP concrete walls.	4
SF-6	Reduce the amount of landscaping.	3
SF-7	Use 3:1 front slopes in lieu of 4:1 on the north side of Wimbish.	4
SF-8	Change the 4-lane section to 3-lane and reduce the right-of-way requirements.	2
PROFILE (PF)		
PF-1	Study the vertical profile to minimize walls, side street impacts, and right-of-way.	5
BRIDGE (BF)		
BF-1	Move the retaining wall at Forest Hill Rd/Charter Blvd. further to the northeast; relocate wall from top of the cut slope to bottom.	5
BF-2	Add a wall at Northminster Drive & Wimbish Road to reduce fill and right-of-way requirements.	5
	Wimbish Road to Northside Drive/ 3-Lane Segment	
ALIGNMENT (AW)		
AW-1	Widen the road all to one side to consolidate right-of-way.	4
AW-2	Flatten the curve from STA 56+00 to 63+00 to improve design speed and sight distance.	4

Rating: 1→2 = Not to be developed 3→4 = Varying degrees of development potential 5 = Most likely to be developed
DS = Design suggestion ABD = Already being done

CREATIVE IDEA LISTING

PROJECT: **WIDENING AND RECONSTRUCTION OF FOREST HILL RD** SHEET NO.: **2 of 2**
Project No. STP-3213(3) and STP-3213(1) - Bibb County, Georgia

NO.	IDEA DESCRIPTION	RATING
	Wimbish Road to Northside Drive/ 3-Lane Segment	
ALIGNMENT (AW) (cont.)		
AW-3	Rotate the skew angle at Forest Hill and Old Lundy Road closer to 90-degrees.	5
AW-4	Allow HDPE drain pipe in lieu of only RCP.	4
AW-5	Use Geogrid fabric and reduce the amount of base material.	5
AW-6	Increase side slopes to 1:1 by using Geogrid and reduce right-of-way.	5
SECTION (SW)		
SW-1	Place sidewalks only on one side of the street instead of two.	3
SW-2	Use 24 inch wide curbs in lieu of 30 inch wide.	4
SW-3	Use MSE walls in lieu of cast-in-place concrete.	4
SW-4	Use 11ft wide lanes in lieu of 12 ft wide.	4
SW-5	Build a 4-lane section in lieu of a 3-lane section to maximize value. Use 11ft wide lanes.	5
SW-6	Replace the retaining wall barrier with guardrail.	5
BRIDGE (BW)		
BW-1	Consider an alternate bridge type such as "Conspan."	4
BW-2	Straighten out Wall #3 and the driveway at STA 45+50 to improve constructability.	5

Rating: 1→2 = Not to be developed 3→4 = Varying degrees of development potential 5 = Most likely to be developed
DS = Design suggestion ABD = Already being done