ORIGINAL TO GENERAL FILES

D.O.T. 66

DEPARTMENT OF TRANSPORTATION
STATE OF GEORGIA

INTERDEPARTMENT CORRESPONDENCE

FILE BRST-0941(9) Bleckley County
P. I. No. 245336

OFFICE Preconstruction

DATE March 18, 2002

FROM C. Wayne Hutto, Assistant Director of Preconstruction

TO SEE DISTRIBUTION

SUBJECT PROJECT CONCEPT REPORT APPROVAL

Attached for your files is the approval for subject project.

CWH/cj

Attachment

DISTRIBUTION:

David Mulling
Harvey Keepler
Jerry Hobbs
Herman Griffin
Michael Henry
Phillip Allen
Marta Rosen
Paul Liles
Ben Buchan
Mike Thomas
BOARD MEMBER

DEPARTMENT OF TRANSPORTATION
STATE OF GEORGIA

INTERDEPARTMENT CORRESPONDENCE

FILE BRST-0941 (9) Bleckley County
P.I. No. 245336

OFFICE Preconstruction

DATE March 4, 2002

FROM J. Wayne Hutto, P.E., Assistant Director of Preconstruction

TO Frank L. Danchetz, P.E., Chief Engineer

SUBJECT **PROJECT CONCEPT REPORT**

This project is the replacement of a structurally deficient bridge on SR 126 over Gum Swamp Creek, 5.8 miles east of Cochran, Georgia. The existing bridge, constructed in 1953, is load limited with a sufficiency rating of 34. State Route 126 at this location is a rural two-lane roadway with 12' travel lanes with rural shoulders. This section of SR 126 is functionally classified as a rural major collector. Traffic is projected to be 1300 VPD and 1800 VPD in the years 2004 and 2024 respectively. The posted speed and the design speed are 55 MPH.

The construction proposes to construct a new 300' x 38' concrete bridge over Gum Swamp Creek at the existing bridge site. The approaches will consist of two, 12' lanes with 10' rural shoulders (2' paved). Traffic will be maintained during construction utilizing an on-site detour.

Environmental concerns include requiring a COE 404 Permit; a Categorical Exclusion will be prepared; a public hearing is not required; time saving procedures are appropriate.

The estimated costs for this project are:

	PROPOSED	APPROVED	PROG DATE	LET DATE
Construction (includes E&C and inflation)	$1,393,000	$1,100,000	2006	FY-06
Right-of-Way	$ 20,000	$ 10,000		
Utilities*	LGPA	LGPA		

*Dodge County signed LGPA for utilities 7-8-99.

BRST-0941 (9) Bleckley County
March 4, 2002

This project is in the STIP. I recommend this project concept be approved.

CWH:JDQ/cj/klp

Attachment

CONCUR _____
Thomas L. Turner, P.E., Director of Preconstruction

APPROVE _____
Frank L. Danchetz, P.E., Chief Engineer

DEPARTMENT OF TRANSPORTATION
STATE OF GEORGIA

INTERDEPARTMENT CORRESPONDENCE

FILE **BRST-0941(9) Bleckley County**
SR 126 over Gum Swamp Creek 5.8 mi E of Cochran
P.I. No. 245336-

OFFICE Atlanta

FROM James B. Buchan, State Consultant Design Engineer

DATE February 12, 2002

FEB 15 2002

TO Wayne Hutto, Assistant Director of Preconstruction

SUBJECT **PROJECT CONCEPT REPORT**

Attached is the original copy of the Concept Report for your further handling for approval in accordance with the Plan Development Process (PDP).

Those on the distribution list below should review the Concept Report and send comments and/or the signature page to the Preconstruction Office within 10 days as per the PDP.

If you have any questions or require further information please call Ted Cashin at (404)463-6135 or Ron Morris of PBS&J, Inc. at (770) 933-0280.

Distribution:
David Mulling, Project Review Engineer
Harvey Keepler, State Environmental/Location Engineer
Phillip Allen, State Traffic Safety and Design Engineer
Marta Rosen, State Transportation Planning Administrator
Herman Griffin, Office of Financial Management Administrator
Mike Thomas, District Engineer – Tennille
Paul Liles, State Bridge & Structural Engineer

JBB:MBA:EJC

cc: PBS&J, Inc.

DEPARTMENT OF TRANSPORTATION
STATE OF GEORGIA
Office of Consultant Design

PROJECT CONCEPT REPORT

Project Number: BRST-0941(9)
County: Bleckley
P. I. Number: 245336

Federal Route Number: S00941
State Route Number: 126

Recommendation for approval:

2-12-02
DATE

Project Manager

2-12-02
DATE

James B. Buchan, MPR
State Consultant Design Engineer

The concept as presented herein and submitted for approval is consistent with that which is included in the Regional Transportation Improvement Program **(RTP)** and/or the State Transportation Improvement Program (STIP).

Date	State Transportation Planning Administrator
Date	State Environmental/Location Engineer
Date	Office of Financial Planning Administrator
Date	State Traffic Safety & Design Engineer
Date	District Engineer
Date	Project Review Engineer
Date	State Bridge & Structural Design Engineer

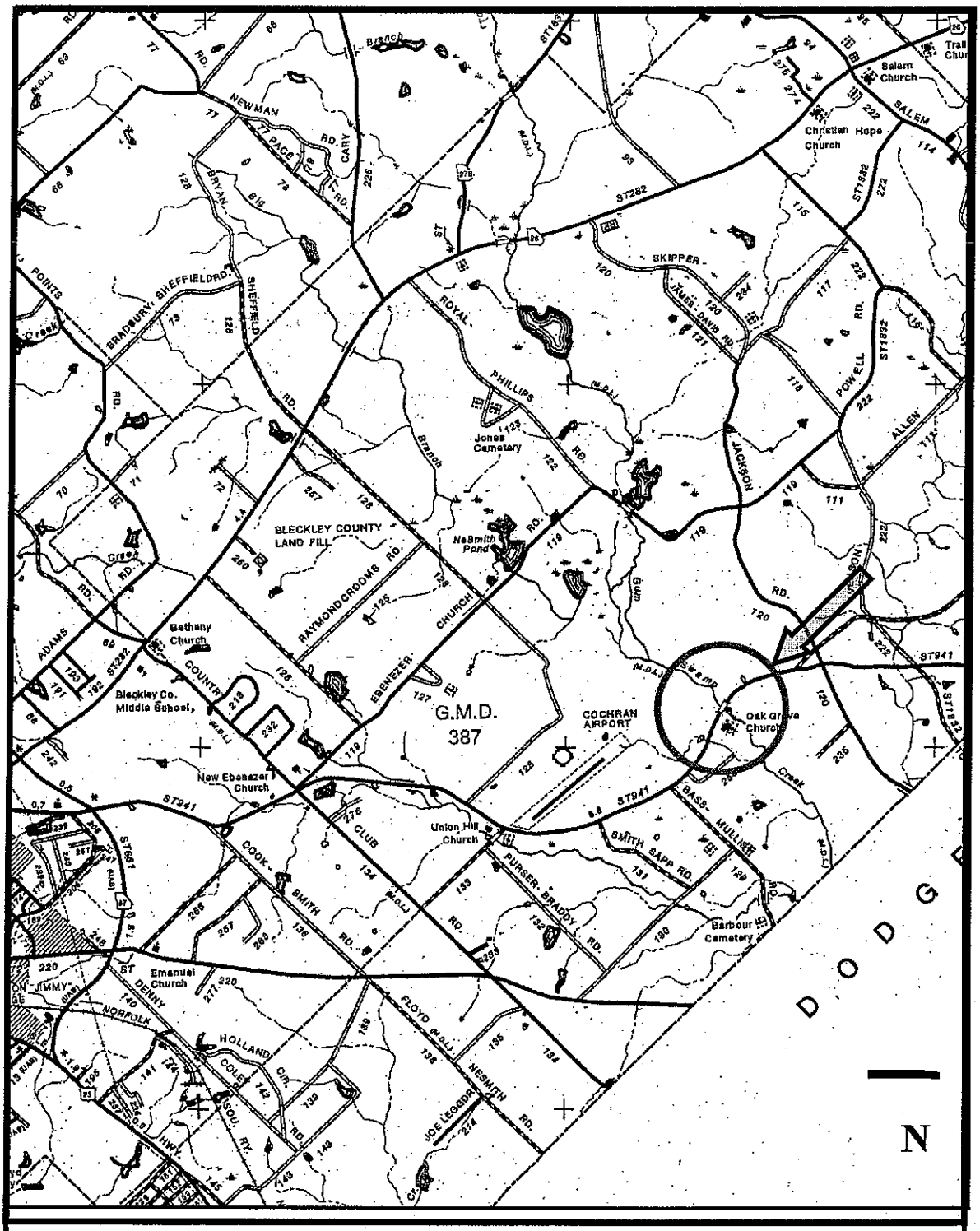

PROJECT LOCATION MAP
Project No.: BRST-0941(9) Bleckley County PI No. 245336
Description: S.R. 126 over Gum Swamp Creek, 5.8 miles E of Cochran

PROJECT CONCEPT REPORT

PROJECT NUMBER: BRST-0941(9)

PROJECT LOCATION & DESCRIPTION

This project is located in Bleckley County on S.R. 126 over Gum Swamp Creek, 5.8 miles east of Cochran.

PROJECT LENGTH: 0.28 miles (gross length)
0.28 miles (net length)

TRAFFIC			
CURRENT		PROJECTED	
YEAR	AADT	YEAR	AADT
2004	1300	2024	1800

PDP CLASSIFICATION	FUNCTIONAL CLASSIFICATION
Minor, Existing Location	Rural Major Collector

FULL OVERSIGHT ( ) **CA ( )** **EXEMPT (X)** **SF ( )**

PROJECT NEED AND PURPOSE

Bridge project BRST-0941(9) will replace the structurally deficient bridge located on State Highway 126 over Gum Swamp Creek, 5.8 miles east of Cochran, Georgia. The bridge's sufficiency rating is 34.6. The Office of Bridge Maintenance has determined that any structure with a sufficiency rating less than 50 should be replaced rather than improved. This project will replace the existing bridge with a structurally adequate bridge.

State Highway 126 is functionally classified as a rural major collector. The posted speed limit along SR 126 is 55 mph. The section where the proposed bridge project improvement would take place, is a school bus route. SR 126 is not part of the Statewide Bicycle Plan. The bridge is located 5.8 miles east of Cochran and was constructed in 1953. Sidewalks are not proposed on the new bridge. Trucks represent 5% of the traffic of SR 126. The project Average Daily Traffic (ADT) along this section of highway for 2004 is 1,300. The projected (2024) ADT for this section of highway is 1,800. Currently no roadway improvements are in the Construction Work Program for SR 126 in this vicinity.

Replacing this bridge will bring it up to current design standards and in doing so will improve the operation and safety of this roadway.

EXISTING ROADWAY

TYPICAL SECTION: The existing roadway is a two lane rural section with 12 foot travel lanes, shoulders and side ditches.

R/W WIDTH: Varies 80' – 100'

POSTED SPEED:	MAX DEGREE OF CURVE		MAXIMUM GRADE
55 MPH	3° 30'00"		0.6%
MAJOR STRUCTURES:	**Length**	**Width**	**Suff. Rating**
Structure No. 023-0014-0 Bridge at Gum Swamp Creek	210'	24'	34.6

PROPOSED ROADWAY WIDENING AND RECONSTRUCTION

TYPICAL SECTION: The proposed roadway will consist of two 12 ft. travel lanes, 10-foot unpaved shoulders (2 feet paved) and rural side ditch sections. The proposed bridge will be an approximate length of 300 ft. The width of the structure will be 38 ft.

DESIGN SPEED	MAX DEGREE OF CURVE	MAX GRADE
55 MPH	Allowable 6° 00' 00" Proposed 3° 30'	Allowable 7.0% Proposed 0.6%
MAJOR STRUCTURES:	**Length**	**Width**
PROJECT NO. BRST-0941(9) Structure at Gum Swamp Creek	300'	38'

PROPOSED RIGHT OF WAY

R/W WIDTH: Varies; 80' min., 160' max.

DISPLACEMENTS **RES:** 0 **BUS:** 0 **M.H.:** 0

TYPE OF ACCESS CONTROL: Permit by GDOT

NUMBER OF PARCELS: 4

COORDINATION

CONCEPT TEAM MEETING DATE: January 25, 2002

CONFORMS TO TIP/STIP: Yes

MEETS LOGICAL TERMINI REQUIREMENTS: Yes

P.A.R. MEETING: None

PERMITS REQUIRED (4f, COE, 404, etc.): Nationwide 404 with PCN

LEVEL OF PUBLIC INVOLVEMENT: None

TIME SAVING PROCEDURES APPROPRIATE: Yes

LOCAL GOVERNMENT COMMITMENTS: LGPA signed by Bleckley County on July 8, 1999.

OTHER PROJECTS IN THE AREA: None.

SCHEDULING CONSIDERATIONS

TIME TO COMPLETE ENVIRONMENTAL:	12	Months
TIME TO COMPLETE PRELIMINARY RE/RW PLANS:	3	Months
TIME TO COMPLETE 404 PERMIT:	12	Months
TIME TO COMPLETE FINAL CONSTRUCTION PLANS:	4	Months
TIME TO BUY RIGHTS-OF-WAY:	9	Months

MISCELLANEOUS

TRAFFIC CONTROL DURING CONSTRUCTION: Temporary detour bridge and runaround parallel to existing alignment. Detour to be 35 mph design with 12 foot travel lanes and 6 foot graded shoulders.

LEVEL OF ENVIRONMENTAL ANALYSIS: Categorical Exclusion (CE) Anticipated

DESIGN VARIATIONS REQUIRED:

	YES	NO	UNDETERMINED
SUBST HORIZ ALIGNMENT	( )	(X)	( )
SUBST ROADWAY WIDTH	( )	(X)	( )
SUBST SHOULDER WIDTH	( )	(X)	( )
SUBST VERT GRADES	( )	(X)	( )
SUBST CROSS SLOPES	( )	(X)	( )
SUBST STOPPING SIGHT DIST	( )	(X)	( )
SUBST SUPERELEV RATES	( )	(X)	( )
SUBST HORIZ CLEARANCE	( )	(X)	( )
SUBST SPEED DESIGN	( )	(X)	( )
SUBST VERTICAL CLEARANCE	( )	(X)	( )
SUBST BRIDGE WIDTH	( )	(X)	( )
SUBST BR STRUCT CAPACITY	( )	(X)	( )

UNDERGROUND STORAGE TANKS: None Identified

HAZARDOUS SITES: None Identified

ALTERNATIVES CONSIDERED

1) Replace existing bridge with an approximate 300 ft X 38 ft bridge at existing location with on-site detour to the west of existing alignment.
2) Replace existing bridge with an approximate 300' X 38' bridge on a parallel alignment to the west of the existing structures – eliminated due to length of realignment required to meet design speed and unfavorable geometry.
3) Replace existing bridge on existing alignment with off-site detour - no feasible detour route exist.
4) Replace existing bridge on existing location with staged construction - eliminated due to required grade change.
5) Concrete box culvert - preliminary hydraulics indicate a box culvert will not be adequate.
6) No Build.

COMMENTS: New structure will be constructed on the existing alignment. The detour will be constructed 70 feet east of the existing alignment.

ATTACHMENTS: Location Map, Cost Estimate, Typical Sections, Notice of Location and Design Approval, Traffic Data, Concept Meeting Minutes, and Bridge Inventory Data

PROJECT CONCEPT REPORT

PRELIMINARY COST ESTIMATE

PROJECT NUMBER: BRST-0941(9) **COUNTY:** Bleckley

DATE: December 20, 2001 **ESTIMATED LETTING DATE:**

PREPARED BY: PBS&J **PROJECT LENGTH (MILES):** 0.28 miles

( ) **PROGRAMMING PROCESS** (X) **CONCEPT DEVELOPMENT** ( ) **DURING PROJECT DEV.**

PROJECT COST	
A. RIGHT-OF-WAY:	
1. PROPERTY (LAND & EASEMENT)	$10,000
2. DISPLACEMENTS; RES: 0, BUS: 0, M.H.: 0	$0
3. OTHER COST (ADM./COST, INFLATION)	$10,000
SUBTOTAL A:	**$20,000**
B. REIMBURSABLE UTILITIES:	
1. RAILROAD	$0
2. TRANSMISSION LINES	$0
3. SERVICES	$10,000
SUBTOTAL B:	**$10,000**
CONSTRUCTION	
C. MAJOR STRUCTURES:	
1. RETAINING WALLS	$0
2. BRIDGES (300' x 38' BRIDGE)	$765,400
3. EXTEND EXISTING CULVERTS	$0
SUBTOTAL C:	**$565,400**
D. GRADING AND DRAINAGE	
1. EARTHWORK	
a. BORROW (7,500 C.Y. @ $6.00)	$45,000
b. EXCAVATION (1,000 C.Y. @ $4.00)	$4,000
SUBTOTAL D-1:	$49,000
2. DRAINAGE	
a. DRAIN PIPE (60 ft of 15 in @ $20)	$1,200
b. SPILLWAY TYPE I (4 each @ $1150)	$4,600

SUBTOTAL D-2:	$5,800
SUBTOTAL D:	**$54,800**
E. BASE AND PAVING	
1. AGGREGATE BASE (700 sq. yd. of 8" @ $8)	$5,600
2. SURFACE AGGREGATE (100 tons @ $15)	$1,500
3. ASPHALT PAVING	
a. Surface (320 tons @ $35)	$11,200
b. Binder (80 tons @ $40)	$3,200
c. Base (160 tons @ $42)	$6,800
d. Leveling (900 tons @ $36)	$32,400
e. Tack Coat (500 gals @ $1)	$500
SUBTOTAL E-3:	$54,100
4. CONCRETE PAVING - Approach Slabs (262 sq. yd. @ $90)	$23,600
SUBTOTAL E:	**$84,800**
F. LUMP ITEMS	
1. TRAFFIC CONTROL	$25,000
2. CLEARING AND GRUBBING	$15,000
3. GRASSING	$10,000
4. EROSION CONTROL	$10,000
5. TEMP. EROSION CONTROL	$25,000
SUBTOTAL F:	**$85,000**
G. MISCELLANEOUS	
1. SIGNING	
a. SIGNS	$1,000
b. POSTS	$500
SUBTOTAL G-1:	$1,500
2. STRIPING	
a. 5 IN WHITE SOLID (4500 ft @ $0.10)	$500
b. 5 IN YELLOW SOLID (2500 ft @ $0.10)	$200
SUBTOTAL G-2:	$700
3. GUARDRAIL	

a. TYPE W (600 ft @ $12)	$7,200
b. TYPE T (84 ft @ $35)	$3,000
c. TYPE 12 ANCHORS (2 @ $1,600)	$3,200
d. TYPE 1 ANCHORS (2@ $450)	$900
SUBTOTAL G-3	$14,240
SUBTOTAL G:	**$16,500**
H. DETOUR	
1. DETOUR BRIDGE (100'X 24')	$37,200
2. EARTHWORK	
a. BORROW (9,500 CY @ $6)	$57,000
b. EXCAVATION (1000 CY @ $4)	$4,000
3. BASE AND PAVING	
a. AGGREGATE BASE (3400 SY of 8" @ $8)	$27,200
b. ASPHALT PAVING	
1. SURFACE (290 TONS @ $35)	$10,200
2. BINDER (380 TONS @ $40)	$15,200
c. TACK COAT (300 GAL @ $1)	$300
SUB-TOTAL H:	**$151,100**

PROJECT CONCEPT REPORT

ESTIMATE SUMMARY		
A. RIGHT-OF-WAY		$20,000
B. REIMBURSABLE UTILITIES		$10,000
CONSTRUCTION		
C. MAJOR STRUCTURES		$765,400
D. GRADING AND DRAINAGE		$54,800
E. BASE AND PAVING		$84,800
F. LUMP ITEMS		$85,000
G. MISCELLANEOUS		$16,500
H. DETOUR		$151,100
SUBTOTAL CONSTRUCTION COST		$1,157,600
INFLATION (5% PER YEAR)		$118,700
NUMBER OF YEARS	2	
E & C (10%)		$115,800
TOTAL CONSTRUCTION COST		**$1,392,100**
GRAND TOTAL PROJECT COST		**$1,422,100**

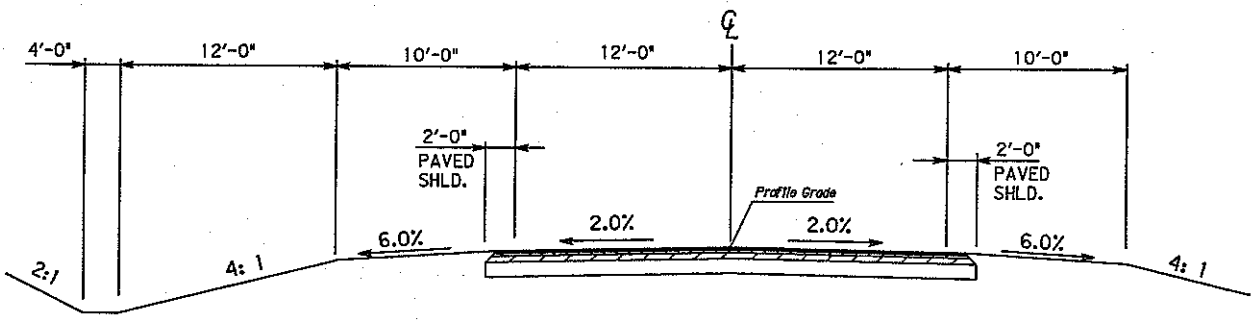

TYPICAL SECTION

SR 126 OVER GUM SWAMP CREEK
PROJECT NO. BRST-0941(9)
P.I. NO. 245336
BLECKLEY CO.

NOTICE OF LOCATION AND DESIGN APPROVAL

Project No. BRST-0941(19) – Bleckley County
P.I. No. 245336

Notice is herby given in compliance with Georgia code 22-2-109 that the Georgia Department of Transportation has approved the Location and Design of this project.

The date of location approval is MARCH 18, 2002.

The project consists of improvements of SR 126 over Gum Swamp Creek, located in Bleckley County, 21st District, Land Lots 28, 29, 32 & 33.

The improvement project includes replacing the existing SR 126 bridge over Gum Swamp Creek.

Drawings or maps or plats of the proposed project, as approved, are on file and are available for inspection at the Georgia Department of Transportation.

Michael Schriver
michael.schriver@dot.state.ga.us
611 Firetower Road
Dublin, Georgia 31021
(478) 275-6596

Any interested party may obtain a copy of the drawings or maps or plats or portions thereof by paying a nominal fee and requesting in writing to:

James B. Buchan
State Consultant Design Engineer
ben.buchan@dot.state.ga.us
No. 2 Capitol Square
Atlanta, Georgia 30334
(404) 463-6133

Any written requests or communication in reference to this project or notice SHOULD include Project and P.I. Numbers as noted at the top of this notice.

Department of Transportation
State of Georgia

INTERDEPARTMENT CORRESPONDENCE

FILE BRST-0941(9), Bleckley County
P.I. # 245336

OFFICE Environment/Location

DATE June 22, 2001

FROM Harvey D. Keepler, State Environment/Location Engineer

TO Jimmy Chambers, State Consultant Design Engineer.
Attn. Ted Cashin

SUBJECT S.R. 126 At Gum Swamp Creek 5.8 MI E of Cochran in Bleckley County.

We are furnishing estimated traffic assignments for the above project as follows:

2000 ADT = 1100
2004 ADT = 1300
2024 ADT = 1800
K = 9%
D = 55%
T = 5%
24 HOUR T. = 7%
S.U. = 3.5%
COMB. = 3.5%

If you have any questions concerning this information please contact Abby Ebodaghe at (404) 699-4461.

Concept Team Meeting Minutes

Project: BRST-0941(9), Bleckley County
P.I. No.: 245336
S.R. 126 over Gum Swamp Creek

Date: February 1, 2002

On January 25, 2002 at 10:00 a.m., a project team concept meeting was held at the GDOT District Office in Tennille, Georgia to review the concept report for project number BRST-0941(9). The following were in attendance:

GDOT		PBS&J
Ted Cashin	Debbie Pennington	Ron Morris
Todd Price	Phillip Scarborough	Mickey Michalski
Jimmy Holly	Rusty Merritt	Daniel McDuff
Nick Everett		
Jim Kitchings		
Jamie Lindsey		

Bleckley County
Ray Hayes
Billy Smith

Ron Morris presented the project and the following comments were made:

General Comments

- On Concept signature page, change "State Transportation Programming Engineer" to "Office of Financial Planning Administrator".

Page 4 of 6

- Add R/W width "Varies, 80′ to 100′" in Existing Roadway Section.

Page 5 of 6

- Add date of Concept Team Meeting to Coordination Section

Typical Sections

- Adjust all slopes to percent instead of inches per foot.

PBS&J

BRIDGE INVENTORY DATA LISTING GEORGIA DEPARTMENT OF TRANSPORTATION

Structure ID: 023-0014-0 **Bleckley County** SUFF. RATING: 34.6

Location & Geography

* Structure I.D. No.: 023-0014-0
200 Bridge Information: 06

* 6A Feature Int.: GUM SWAMP CREEK
* 6B Critical Bridge: 0
* 7A Route Number Carried: SR00126
* 7B Facility Carried: SR 126
* 9 Location: 5.8 MI E OF COCHRAN
2 DOT District: 2
207 Year Photo: 1997

* 91 Inspection Frequency: 24 Date: 11/15/1999
92A Fract Crit Insp Freq: 0 00 Date: 0000
92B Underwater Insp Freq: 0 00 Date: 0000
92C Other Spc. Insp Freq: 0 00 Date: 0000

* 4 Place Code: 00000

* 5 Inventory Route (O/U): 1
Type: 3
Designator: 1
Number: 00126
Direction: 0

* 16 Latitude: 32-24.1
* 17 Longitude: 83 -15.4

98 Border Bridge: 000 %Shared: 00
99 ID Number: 000000000000000

* 100 Defense Highway: 0
* 101 Parallel Structure: N
* 102 Direction of Traffic: 2
264 Road Inventory Mile Post: 005.41

* 208 Inspection Area: 10 Initials: DLC

* Location I.D. No: 023-00126D-005.41E
* XReferen I.D. No: 000-000000-000.000

* 104 Highway System: 0
* 26 Functional Classification: 07
* 204 Federal Route Type: S No: 00941
* 110 Truck Route: 0
206 School Bus Route: 1
217 Benchmark Elevation: 301.62
218 Datum: 2
* 19 Bypass Length: 5
* 20 Toll: 3
* 21 Maintenance: 01
* 22 Owner: 01
* 31 Design Load: 2
37 Historical Significance: 5
205 Congressional District: 08
* 27 Year Constructed: 1953
106 Year Reconstructed: 0000
33 Bridge Median: 0
34 Skew: 00
35 Structure Flared: 0
38 Navigation Control: 0
213 Special Steel Design: 0
267 Type of Paint: 1

* 42 Type Service On: 1
Under: 5
214 Movable Bridge: 00
203 Type Bridge: E-N-A-O
259 Pile Encasement: 2
* 43 Structure Type Main: 1 01
45 No. Spans Main: 014
44 Structure Type Appr: 0 0
46 No. Spans Appr: 0000
226 Bridge Curve Horz: 0 Vert: 0
111 Pier Protection: 0
107 Deck Structure Type: 2

108 Wearing Surface Type: 1
Membrane: 8
Protection: 8

Signs & Attachments

223 Expansion Joint Type: 02
242 Deck Drains: 1

243 Parapet Location: 0
Height: 0
Width: 0

238 Curb: 1.2 1
239 Handrail: 3 3
* 240 Median Barrier Rail: 0

241 Bridge Median Height: 0
Width: 0

* 230 Guardrail Loc Dir Rear: 6
Fwrd: 6
Oppo Dir Rear: 0
Fwrd: 0

244 Approach Slab: 0
224 Retaining Wall: 0

233 Posted Speed Limit: 55
236 Warning Sign: 1
234 Delineator: 1
235 Hazard Boards: 1

237 Utilities Gas: 00
Water: 00
Electric: 00
Telephone: 00
Sewer: 00

247 Lighting Street: 0
Navigation: 0
Aerial: 0

* 248 County Continuity No: 00

BRIDGE INVENTORY DATA LISTING GEORGIA DEPARTMENT OF TRANSPORTATION

Structure ID: 023-0014-0 **Bleckley County** SUFF. RATING: 34.6

Programming Data

201 Project No: S-0941 (2)
202 Plans Available: 0
249 Prop. Proj No: BRST-0941 (9)
250 Approval Status: 0000
251 P.I. No: 245336
252 Contract Date: 02/01/2004
260 Seismic No: 00000
75 Type Work: 34 1
94 Bridge Imp. Cost: $ 252
95 Roadway Imp. Cost: $ 51
96 Total Imp. Cost: $ 403
76 Imp. Length: 000421
97 Imp. Year: 1990
114 Future ADT: 001800 Year: 2018

Hydraulic Data

215 Waterway Data
Highwater Elev: 0000.0 Year: 0000
Flood Elev: 0000.0 Freq: 00
Avg. Streambed Elev: 0000.0
Drainage Area: 00000
Area of Opening: 000000
113 Scour Critical: 6
216 Water Depth: 03.2 Br Height: 12.0
222 Slope Protection: 6
221 Spur Dikes Rear: 0 Fwrd: 0
219 Fender System: 0
220 Dolphin: 0
223 Culvert Cover: 000
Type: 0
No Barrels: 0
Width: 0.0
Height: 0.0
Length: 0
Apron: 0
* 265 U/W Insp. Area: 0 Diver: ZZZ

* Location I.D. No: 023-00126D-005.41E
* XReferen I.D. No: 000-000000-000.000

Measurements

* 29 ADT: 001200 Year: 1998
109 % Trucks: 16
* 28 Lanes On: 02 Under: 00
210 No. Tracks On: 00 Under: 00
* 48 Max. Span Length: 0015
* 49 Structure Length: 210
51 Br. Rdwy. Width: 23.8
52 Deck Width: 25.1
* 47 Tot. Horz. Cl: 23.8
50 Curb/Sdewlk Width: 0.8/0.8
32 Approach Rdwy Width: 022
* 229 Shlder Width:
Rear Lt: 5.0 Type: 8 Rt: 5.0
Fwrd Lt: 5.0 Type: 8 Rt: 5.0
Pvment Width:
Rear: 22.0 Type: 2
Fwrd: 22.0 Type: 2
Intersection Rear: 0 Fwrd: 0
36 Safety Features Br. Rail: 2
Transition: 2
App. G. Rail: 2
App. Rail End: 2
53 Minimum Cl. Over: 99' 99"
Under: N 00' 00"
* 228 Min. Vert. Cl
Act. Odm. Dir: 99' 99"
Oppo. Dir: 99' 99"
Posted Odm. Dir: 00' 00"
Oppo. Dir: 00' 00"
55 Lateral Undercl. Rt: N 99.9
56 Lateral Undercl. Lt: 0.0
* 10 Max Min Vert Cl: 99' 99" Dir: 0
39 Nav Vert Cl: 000 Horz: 0000
116 Nav Vert Cl Closed: 000
245 Deck Thickness Main: 12.0
Deck Thick Approach: 0.0
246 Overlay Thickness: 0.0
211 Tons Structural Steel: 0.0
212 Year Last Painted: Sup: 0000 Sub: 1953

Ratings

66 Inventory Type: 2 Rating: 13
64 Operating Type: 2 Rating: 29
231 Calculated Loads
H-Modified: 15 1
HS-Modified: 25 0
Type 3: 27 1
Type 3s2: 40 0
Timber: 32 1
Piggyback: 00 0
261 H Inventory Rating: 10
262 H Operating Rating: 15
67 Structural Evaluation: 2
58 Deck Condition: 8
59 Superstructure Condition: 7
* 227 Collision Damage: 0
60A Substructure Condition: 5
60B Scour Condition: 6
60C Underwater Condition: N
71 Waterway Adequacy: 8
61 Channel Protection Cond: 6
68 Deck Geometry: 3
69 UnderClr. Horz/Vert: N
72 Appr. Alignment: 7
62 Culvert: N

Posting Data

70 Bridge Posting Required: 3
41 Struct Open, Posted, Cl: P
* 103 Temporary Structure: T

232 Posted Loads H-Modified: 15
HS-Modified: 00
Type 3: 27
Type 3S2: 00
Timber: 32
Piggyback: 00
253 Notification Date: 0000
253 Fed Notify Date: 0000 2

Report Date: 05/23/2001

DEPARTMENT OF TRANSPORTATION
STATE OF GEORGIA
Office of Consultant Design

PROJECT CONCEPT REPORT

Project Number: BRST-0941(9)
County: Bleckley
P. I. Number: 245336

Federal Route Number: S00941
State Route Number: 126

Recommendation for approval:

2-12-02
DATE

Project Manager

2-12-02
DATE

James B. Brubaker
State Consultant Design Engineer

The concept as presented herein and submitted for approval is consistent with that which is included in the Regional Transportation Improvement Program **(RTP)** and/or the State Transportation Improvement Program (STIP).

2-20-02
Date

State Transportation Planning Administrator

Date

State Environmental/Location Engineer

Date

Office of Financial Planning Administrator

Date

State Traffic Safety & Design Engineer

Date

District Engineer

Date

Project Review Engineer

Date

State Bridge & Structural Design Engineer

DEPARTMENT OF TRANSPORTATION
STATE OF GEORGIA
Office of Consultant Design

PROJECT CONCEPT REPORT

Project Number: BRST-0941(9)
County: Bleckley
P. I. Number: 245336

Federal Route Number: S00941
State Route Number: 126

Recommendation for approval:

2-12-02
DATE

Project Manager

2-12-02
DATE

James B. Buchanan, MPI
State Consultant Design Engineer

The concept as presented herein and submitted for approval is consistent with that which is included in the Regional Transportation Improvement Program **(RTP)** and/or the State Transportation Improvement Program (STIP).

Date	State Transportation Planning Administrator
2/22/02 Date	State Environmental/Location Engineer
Date	Office of Financial Planning Administrator
Date	State Traffic Safety & Design Engineer
Date	District Engineer
Date	Project Review Engineer
Date	State Bridge & Structural Design Engineer

DEPARTMENT OF TRANSPORTATION
STATE OF GEORGIA
Office of Consultant Design

MAR 8 2002

PROJECT CONCEPT REPORT

Project Number: BRST-0941(9)
County: Bleckley
P. I. Number: 245336

Federal Route Number: S00941
State Route Number: 126

Recommendation for approval:

2-12-02
DATE

Project Manager

2-12-02
DATE

James B. Buchanan, MPI
State Consultant Design Engineer

The concept as presented herein and submitted for approval is consistent with that which is included in the Regional Transportation Improvement Program **(RTP)** and/or the State Transportation Improvement Program (STIP).

Date	State Transportation Planning Administrator
Date	State Environmental/Location Engineer
2/18/02 Date	Office of Financial Planning Administrator
Date	State Traffic Safety & Design Engineer
Date	District Engineer
Date	Project Review Engineer
Date	State Bridge & Structural Design Engineer

DEPARTMENT OF TRANSPORTATION
STATE OF GEORGIA
Office of Consultant Design

PROJECT CONCEPT REPORT

Project Number: BRST-0941(9)
County: Bleckley
P. I. Number: 245336

Federal Route Number: S00941
State Route Number: 126

Recommendation for approval:

2-12-02
DATE

Project Manager

2-12-02
DATE

James B. Buchanan, MPA
State Consultant Design Engineer

The concept as presented herein and submitted for approval is consistent with that which is included in the Regional Transportation Improvement Program **(RTP)** and/or the State Transportation Improvement Program (STIP).

Date	State Transportation Planning Administrator
Date	State Environmental/Location Engineer
Date	Office of Financial Planning Administrator
2/22/02 Date	Phillip M. Allen State Traffic Safety & Design Engineer
Date	District Engineer
Date	Project Review Engineer
Date	State Bridge & Structural Design Engineer

DEPARTMENT OF TRANSPORTATION
STATE OF GEORGIA
Office of Consultant Design

PROJECT CONCEPT REPORT

Project Number: BRST-0941(9)
County: Bleckley
P. I. Number: 245336

Federal Route Number: S00941
State Route Number: 126

Recommendation for approval:

2-12-02
DATE

Project Manager

2-12-02
DATE

James B. Buchanan, MBI
State Consultant Design Engineer

The concept as presented herein and submitted for approval is consistent with that which is included in the Regional Transportation Improvement Program **(RTP)** and/or the State Transportation Improvement Program (STIP).

Date	State Transportation Planning Administrator
Date	State Environmental/Location Engineer
Date	Office of Financial Planning Administrator
Date	State Traffic Safety & Design Engineer
3/8/02 Date	Michael L. Thomas District Engineer DB
Date	Project Review Engineer
Date	State Bridge & Structural Design Engineer

DEPARTMENT OF TRANSPORTATION
STATE OF GEORGIA
Office of Consultant Design

PROJECT CONCEPT REPORT

Project Number: BRST-0941(9)
County: Bleckley
P. I. Number: 245336

Federal Route Number: S00941
State Route Number: 126

Recommendation for approval:

2-12-02
DATE

Project Manager

2-12-02
DATE

James B. Brubaker
State Consultant Design Engineer

The concept as presented herein and submitted for approval is consistent with that which is included in the Regional Transportation Improvement Program **(RTP)** and/or the State Transportation Improvement Program (STIP).

Date — State Transportation Planning Administrator

Date — State Environmental/Location Engineer

Date — Office of Financial Planning Administrator

Date — State Traffic Safety & Design Engineer

Date — District Engineer

Date — Project Review Engineer

2-17-02
Date — State Bridge & Structural Design Engineer