Fred
6-24-97
Roxana

ORIGINAL TO GENERAL FILES

JUN 20 1997

D.O.T. 66

DEPARTMENT OF TRANSPORTATION
STATE OF GEORGIA

INTERDEPARTMENT CORRESPONDENCE

FILE EDS-441(44) Morgan County
P. I. No. 222570

OFFICE Preconstruction

DATE June 19, 1997

FROM C. Wayne Hutto, Assistant Director of Preconstruction

TO SEE DISTRIBUTION

SUBJECT **PROJECT CONCEPT REPORT APPROVAL**

Attached for your files is the approval for subject project.

CWH/cj

Attachment

DISTRIBUTION:

Walker Scott
Bobby Mustin
David Studstill (ATTN: Harvey Keepler)
Jerry Hobbs
Herman Griffin
Marta Rosen (ATTN: Michael Henry)
Marion Waters
Toni Dunagan
Paul Liles
Jim Hitt (Traffic Ops)
Jim Kennerly
Charles Norris

D.O.T. 66

DEPARTMENT OF TRANSPORTATION
STATE OF GEORGIA

INTERDEPARTMENT CORRESPONDENCE

FILE EDS-441(44) Morgan County
P.I. No. 222570

OFFICE Preconstruction

DATE June 5, 1997

FROM Walker W. Scott, Jr., P.E., Director of Preconstruction

TO Wayne Shackelford, Commissioner

SUBJECT **PROJECT CONCEPT REPORT**

This project is the widening and reconstruction of US 441/SR 24 from the Putnam-Morgan County line to Industrial Park Road/CR 225 for a total of 13.0km. The existing roadway varies from 2 to 3 lanes with rural shoulders on 30.0m of existing right-of-way. The existing major structure consists of a 81.0m x 8.0m bridge over I-20 with a sufficiency rating of 80. State Route 24/US 441 is a primary north-south corridor in east Georgia and is part of the Governor's Road Improvement Program (GRIP). The existing roadway is reaching capacity and improvement will be required to maintain an acceptable level of service. This project is on a proposed bicycle route as identified in the Georgia Statewide Bicycle and Pedestrian Plan. The base year traffic (2001) varies from 9,550 VPD to 23,800 VPD and the design year traffic (2021) varies from 16,200 VPD to 40,450 VPD. The posted speed is 90km/h and the design speed is 105km/h.

The proposed construction will provide four, 3.6m lanes with a 13.4m depressed grassed median from the Putnam-Morgan County line to 667.0m south of Pierce Dairy Road/CR 121, where it transitions to four, 3.6m lanes separated by a 6.1m raised median and ties into the existing 5 lane section south of the Madison Bypass. This project will include 2.4m paved shoulders, including a 1.2m bike lane, on both sides for the entire project length. Approximately 90% of the existing roadway requires reconstruction. No design exceptions are required to implement this project. The southern terminus of this project ties into project EDS-441 (45) Putnam County, with a similar typical section. Traffic will be maintained utilizing stage construction.

Environmental concerns include requiring a COE 404 permit; an Environmental Assessment will be prepared; 23 displacements--16 residences, 6 businesses, and 1 mobile home; a public hearing will be held; time saving procedures are not appropriate.

EDS-441(44) Morgan
June 5, 1997

The estimated costs for this project are:

	PROPOSED	APPROVED	PROG DATE	LET DATE
Construction (includes E&C and inflation)	$18,515,000	$13,725,000	2000	LR
Right-of-Way	$ 9,967,000	$ 1,150,000		
Utilities*	$ 711,000	$ 711,000		

*Morgan County refused LGPA for utilities 2-15-96.

The US 441 improvements are part of the GRIP. I recommend this project concept be approved.

WWS:JDQ/cj

Attachment

CONCUR Frank L. Danchetz
Frank L. Danchetz, P.E., Chief Engineer

APPROVE Wayne Shackelford
Wayne Shackelford, Commissioner

DEPARTMENT OF TRANSPORTATION
STATE OF GEORGIA

INTERDEPARTMENTAL CORRESPONDENCE

PRECONSTRUCTION

FILE: EDS-441(44) MORGAN
P.I. Number 222570

OFFICE: Atlanta, Georgia

DATE: APRIL 2, 1997

FROM: Bob Mustin, Project Review Engineer DTM

TO: C. Wayne Hutto, Assistant Director of Preconstruction

SUBJECT: **PROJECT CONCEPT REPORT**

We have reviewed the concept report submitted March 26, 1997 by the letter from David Studstill dated March 24, 1997 and have no comments.

The estimated costs for the project are as follows:

Construction	$ 15,302,000
Inflation	$ 1,530,000
E & C	$ 1,683,000
Right of Way	$ 9,967,000
Reimbursable Utilities	$ 711,000

DTM

c: David Studstill

Johnny

RECEIVED
MAR 25 1997
PRECONSTRUCTION

DEPARTMENT OF TRANSPORTATION
STATE OF GEORGIA

INTERDEPARTMENT CORRESPONDENCE

FILE EDS-441(44)
Morgan County

P.I. No.: 222570

OFFICE Environment/Location

DATE March 24, 1997

DS RRE

FROM David E. Studstill, P.E., State Environment/Location Engineer

TO Wayne Hutto, Assistant Director of Pre-Construction

SUBJECT **Concept Report - US 441 Improvements**

In accordance with the Plan Development Process, the concept report for the above project is attached for your review and processing.

If there are questions please contact Roxana Ene at 404-699-4464.

DES/RRE

Attachments

cc: Bobby Mustin, Project Review Engineer
James Kennerly, State Road and Airport Design Engineer
Marion Waters, State Traffic Operations Engineer
Paul Liles, State Bridge and Structural Design Engineer
Charles Norris, Tennille District Engineer

DEPARTMENT OF TRANSPORTATION
STATE OF GEORGIA
OFFICE OF ENVIRONMENT/LOCATION

PROJECT CONCEPT REPORT
EDS-441(44)
PUTNAM COUNTY
P.I. NO. 222570

US Route No.: 441 **Date of Report:** March 3, 1997

State Route No.: 24

RECOMMENDATION FOR APPROVAL

3/18/97
Date **State Environmental/Location Engineer**

Date **State Road & Airport Design Engineer**

Date **State Traffic Operations Engineer**

Date **District Engineer/Tennille**

Date **Project Review Engineer**

Date **State Bridge & Structural Design Engineer**

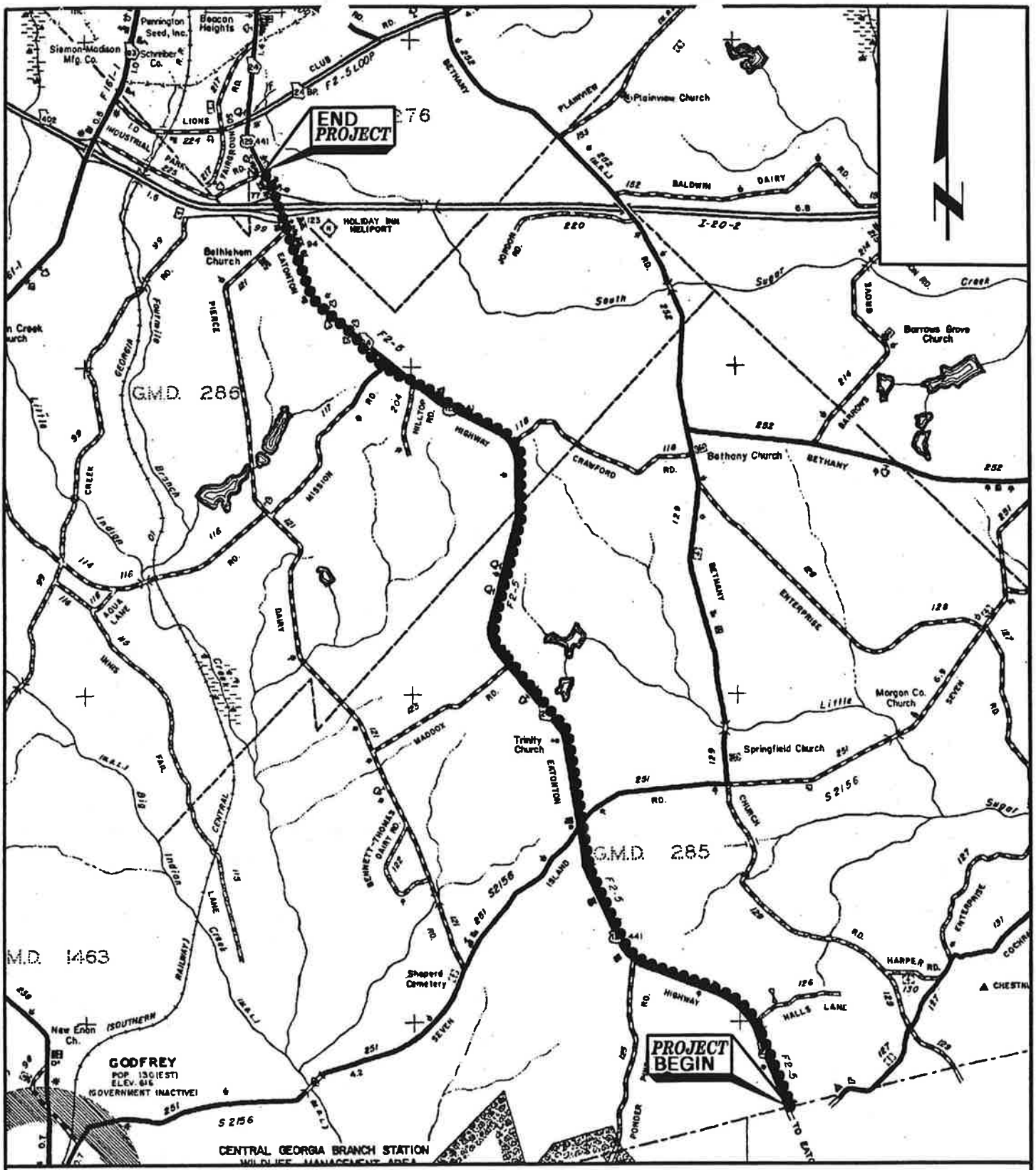

0 1 2

SCALE IN MILES

LOCATION

EDS-441(44)
U.S. 441/S.R. 24 IMROVEMENTS
MORGAN COUNTY
AUG. 1996

P.I.# 222570

SOURCE: GENERAL HIGHWAY MAP, MORGAN CO., GEORGIA
PREPARED BY THE GEORGIA DEPARTMENT OF TRANSPORTATION, 1992

PROJECT CONCEPT REPORT

PROJECT NUMBER: EDS-441-(44) ~~PUTNAM~~ MORGAN COUNTY

PROJECT LOCATION AND DESCRIPTION

Project EDS-441(44) is the proposed improvement to the existing US441/SR24. This project proposes to widen the existing roadway from 2 and 3 lanes to 4 with a 44 foot (13 m) grassed median and a 20 foot (6 m) raised median. The project begins at the Putnam-Morgan County line and extends north 8.6 miles (13 km) to Industrial Park Road (CR225). At its beginning, the project holds the existing pavement left, widening the right side. Just past Halls Lane (CR126), the concept continues to widen on the right side holding the existing R\W on the left side, to avoid a historic boundary. The project keeps the same concept until Hill Top Rd.(CR204) where alignment changes to the left side and holds existing R\W right to avoid the "Tucker family graves", an historic monument. Approximately 2200' (667 m) south of Pierce Dairy Rd.(CR121), concept begins transitioning to a 20' (6 m) raised median and ties into the existing 5 lane section. The project ends at Industrial Park Rd.(CR225)

Design speed is 65 mph (105 km/h), proposed ROW is 250' (80 m) for 44 ft. (13 m) median and 150' (46 m) for the 20' (6 m) raised median. Access control would be by permit. Less than 1 ac. of possible wetlands would be impacted. Sixteen houses, 6 business buildings and 1 mobile home would be displaced.

TRAFFIC

	CURRENT		PROJECTED	
SECTION	**YEAR**	**AADT**	**YEAR**	**AADT**
US 441 improvement	2001	9,550-23,800	2021	16,200-40,450

PDP CLASSIFICATION	FUNCTIONAL CLASSIFICATION
MAJOR/EXISTING	RURAL ARTERIAL

NON-CA (x) **CA ( )** **EXEMPT ( )** **N/A (x)**

NEED AND PURPOSE

S.R. 24 is a primary north-south corridor in east Georgia. These proposed projects involve the widening and reconstruction of S.R. 24 from C.R. 245 in Putnam County northerly, to the southern terminus of the Watkinsville Bypass in Oconee County. The need and purpose of this project is twofold. First, the S.R. 24 Improvements are part of the Governor's Road Improvement Program (GRIP). The improvement involves the multi-laning of S.R. 24 along the U.S. 441 GRIP corridor. GRIP was initiated in the 1980's in order to address the importance of stimulating economic growth via an improved transportation network.

The second part of the need and purpose pertains to the highway capacity of S.R. 24. The roadway is reaching capacity and improvements will be required to maintain an acceptable level-of-service. The project will increase the capacity and level-of-service on S.R. 24 by widening it from two lanes to four lanes. The Average Daily Traffic (ADT), within the limits of EDS-441 (40,45,44,42,43), ranged between 4,800 to 12,100 in 1994. The 20 year (2013) projected volume ranges between 13,163 and 25,053 ADT. The Level of Service (LOS) for this section of S.R. 24 within the project limits was computed to be at "C" in 1994 which indicates that traffic flow may be susceptible to congestion and passing impediments. This road widening project will reduce traffic congestion and driver discomfort.

EXISTING ROADWAY

TYPICAL SECTION:	2 and 3 - 3.6 m LANES WITH OPEN DITCH DRAINAGE	RIGHT-OF-WAY WIDTH 30 m
POSTED SPEED	**MINIMUM RADIUS OF CURVE**	**MAX GRADE**
90 km/h	437 m	5.00%

MAJOR STRUCTURES

FEATURES INTERSECTED/TYPE	LENGHT	WIDTH	PRIORI TY RATING	SUFF. RATING
BRIDGE OVER I-20	81 m	8 m	-	80

PROPOSED LENGTH OF PROJECT: 13 km

WIDENING EXISTING US 441				
TYPICAL SECTION: 4 LANES RURAL WITH 13.6 m MEDIAN				
DESIGN SPEED	MINIMUM RADIUS OF CURVE		MAX. GRADE	
105 km/h	ALLOWABLE	466 m	ALLOWABLE	4.00%
	PROPOSED	582 m	PROPOSED	3.00%

NEW LOCATION

TYPICAL SECTION: 4 LANES RURAL WITH 13.6 m MEDIAN AND 4 LANES RURAL WITH 6 m MEDIAN

PROPOSED MAJOR STRUCTURE

FEATURES INTERSECTED/TYPE	LENGHT	WIDTH
BRIDGE OVER I-20 - widen existing bridge	81 m	28 m

DESIGN SPEED	MINIMUM RADIUS OF CURVE		MAX. GRADE	
105 km/h	ALLOWABLE	466 m	ALLOWABLE	4.00%
	PROPOSED	499 m	PROPOSED	3.00%

PROPOSED RIGHT-OF-WAY

RIGHT-OF-WAY WIDTH	PARCELS IMPACTED	DISPLACEMENTS		
80 m 45 m	73	RES.: 16	BUS.: 6	M.H.: 1

COORDINATION

TYPE OF ACCESS CONTROL:	BY PERMIT.
CONCEPT TEAM MEETING DATE:	JUNE 20, 1996
PERMITS REQUIRED:	INDIVIDUAL PERMIT; LESS THAN 1 AC OF WETLANDS ARE AFFECTED.
LEVEL OF PUBLIC INVOLVEMENT:	PUBLIC HEARING
TIME SAVING PROCEDURES APPROPRIATE:	NO
OTHER PROJECTS IN THE AREA:	EDS-441(45) and EDS-441(42)

MISCELLANEOUS

TRAFFIC CONTROL DURING CONSTRUCTION:	TRAFFIC TO BE MAINTAINED ON EXISTING ROADS.
LEVEL OF ENVIRONMENTAL ANALYSIS:	EA
UNDERGROUND STORAGE TANKS:	NONE KNOWN; INVESTIGATION REQUESTED 8/23/96
HAZARDOUS WASTE SITES:	NONE KNOWN; INVESTIGATION REQUESTED 8/23/96

DESIGN VARIATIONS REQUESTED:

	YES	NO	UNDETERMINED
SUBST HORIZ ALIGNMENT	( )	(X)	( )
SUBST ROADWAY WIDTH	( )	(X)	( )

SUBST VERTICAL GRADES	( )	(X)	( )
SUBST CROSS SLOPES	( )	(X)	( )
SUBST STOPPING SIGHT DIST	( )	(X)	( )
SUBST SUPERELEV RATES	( )	(X)	( )
SUBST HORIZONTAL CLEARANCE	( )	(X)	( )
SUBST SPEED DESIGN	( )	(X)	( )
SUBST VERTICAL CLEARANCE	( )	(X)	( )
SUBST BRIDGE WIDTH	( )	(X)	( )
SUBST BR STRUCT CAPACITY	( )	(X)	( )

ALTERNATIVES CONSIDERED: NO BUILD

ESTIMATED COST

CONSTRUCTION:	$15,302,000	**RIGHT-OF-WAY:**	$9,967,000
E & C (10%):	$1,530,000	**ACQUIRED BY:**	D.O.T.
INFLATION:	$1,725,000	**UTILITIES:**	$711,200
(2 yrs at 5% per yr)		**ADJUSTED BY:**	LGPA WAS REQUESTED
TOTAL CONS'T COST:	$18,557,000		

COMMENTS

1. TOTAL RECONSTRUCTION FOR THIS PROJECT IS 90%.

2. THE TWO PROJECTS EDS-441(44) AND EDS-441(45) ARE TO BE WORKED TOGETHER FOR PERMITTING AND ENVIRONMENTAL CONSIDERATIONS.

ATTACHMENTS: COST ESTIMATE, TYPICAL SECTIONS, TEAM MEETING MINUTES
PREPARED BY: ROXANA ENE, L.E. I

PRELIMINARY COST ESTIMATE
OFFICE OF ENVIRONMENT/LOCATION

P.I. NO: 222570 **DATE:** 03-07-1997

PROJECT NO: EDS-441(44)

PROJECT NAME: US441\SR24 IMPROVEMENTS

COUNTY: MORGAN

PROJECT DESCRIPTION:
US441/SR24 IMPROVEMENTS FROM PUTNAM/MORGAN COUNTY
LINE TO MADISON BP

PROJECT LENGTH: 8.600 MILES **SECTION LENGTH:** 6.600 MILES

TYPICAL SECTION:
RURAL NEW LOCATION-4-LANES WITH 44' DIV MEDIAN (48' PAV'T)
PROPOSED R / W = 250 ft

EXISTING ROADWAY (If Applicable):
2 AND 3 LANES WITH OPEN DITCH DRAINAGE

TRAFFIC:

INITIAL DESIGN YEAR: 2001 **DAILY VOLUME (AADT):** 16,000

FINAL DESIGN YEAR: 2021 **DAILY VOLUME (AADT):** 28,200

COMMENTS:

PREPARED BY: ROXANA ENE LE I

PROJECT COSTS

A. RIGHT - OF - WAY

1. PROPERTY (Land and Easements)	$ 0
2. DISPLACEMENTS	$ 0
3. OTHER COST	$ 0
SUBTOTAL	$ 0

B. REIMBURSABLE UTILITIES

1. RAILROAD	$ 0
2. TRANSMISSION LINES	$ 0
3. SERVICES	$ 0
SUBTOTAL	$ 0

C. MAJOR STRUCTURES

1. WALLS	$ 0
2. BRIDGE STREAM CROSSING	$ 0
3. BRIDGE OVER/UNDERPASS	$ 0
4. BOX CULVERTS	$ 0
SUBTOTAL	$ 0

D. GRADING AND DRAINAGE

1. EARTHWORK	
a. UNCLASSIFIED EXCAVATION SOIL 280,000 CY @ $1.44	$ 403,000
b. UNCLASSIFIED EXCAVATION ROCK 28,000 CY @ $4.00	$ 112,000
c. BORROW EXCAVATION 0 CY @ $3.00	$ 0
2. DRAINAGE	
a. MINOR DRAINAGE (Including Cross Drain Pipes & Longitudinal System) 6.600 MILES @ $82,080	$ 542,000
b. CURB AND GUTTER 0 LF @ $9.27	$ 0
SUBTOTAL	$ 1,057,000

PROJECT COSTS
con't.

E. BASE AND PAVING

1. GRADED AGGREGATE BASE	$ 1,936,000
12.00" -- 156,119 T @ $12.40	
2. ASPHALT PAVING	
a. ASPHALTIC CONCRETE "E"	$ 741,000
1.50" -- 22,993 T @ $32.22	
b. ASPHALTIC CONCRETE "B"	$ 977,000
2.00" -- 30,657 T @ $31.87	
c. ASPHALTIC CONCRETE BASE	$ 2,967,000
9.00" -- 96,180 T @ $30.85	
d. BITUMINOUS TACK COAT	$ 29,000
33,628 G @ $0.85	
3. CONCRETE PAVING	$ 0
4. OTHER PAVING	$ 665,000
SUBTOTAL	**$ 7,315,000**

F. LUMP ITEMS

1. TRAFFIC CONTROL	$ 35,000
2. CLEARING AND GRUBBING	$ 940,000
200 ACRES @ $4,700	
3. LANDSCAPING	$ 337,000
6.600 MILES @ $51,000	
4. EROSION CONTROL	$ 317,000
6.600 MILES @ $48,000	
5. DETOURS (Including Temporary Bridges)	$ 0
SUBTOTAL	**$ 1,629,000**

G. MISCELLANEOUS

1. SIGNING/STRIPING	$ 244,000
6.600 MILES @ $37,000	
2. GUARDRAIL	$ 0
0 LF @ $11.46 + 0 Anchors @ $1,326.82	
3. OTHER	$ 1,063,000
6.600 MILES @ $161,100	
SUBTOTAL	**$ 1,307,000**

H. SPECIAL FEATURES	**$ 0**

ESTIMATE SUMMARY

		SECTION COST (per mile)
A. RIGHT-OF-WAY	**$ 0**	$ 0
B. REIMBURSABLE UTILITIES	**$ 0**	$ 0

CONSTRUCTION COST SUMMARY

C. MAJOR STRUCTURES	$ 0	
D. GRADING AND DRAINAGE	$ 1,057,000	
E. BASE AND PAVING	$ 7,315,000	
F. LUMP ITEMS	$ 1,629,000	
G. MISCELLANEOUS	$ 1,307,000	
H. SPECIAL FEATURES	$ 0	
SUBTOTAL CONSTRUCTION COST	**$ 11,308,000**	$ 1,713,000
E. & C. (10%)	$ 1,131,000	
INFLATION 2 yr(s) @ 5% per year	$ 1,275,000	
TOTAL CONSTRUCTION COST	**$ 13,714,000**	$ 2,078,000
GRAND TOTAL CONSTRUCTION COST	**$ 13,714,000**	**$ 2,078,000**

RURAL NEW LOCATION-4-LANES WITH 44' DIV MEDIAN (48' PAV'T)

PR LIMINARY COST ESTIMA E
OFFICE OF ENVIRONMENT/LOCATION

P.I. NO: 222570 **DATE:** 03-07-1997

PROJECT NO: EDS-441(44)

PROJECT NAME: US441/SR24 IMPROVEMENTS

COUNTY: MORGAN

PROJECT DESCRIPTION:
US441/SR24 IMPROVEMENTS FROM PUTNAM/MORGAN COUNTY
LINE TO MADISON BP

PROJECT LENGTH: 8.600 MILES **SECTION LENGTH:** 1.000 MILES

TYPICAL SECTION:
RURAL WIDENING-2 TO 4 LANES WITH 44' DIV MEDIAN (48' PAV'T)
PROPOSED R / W = 250 ft

EXISTING ROADWAY (If Applicable):
2 AND 3 LINES WITH OPEN DITCH DRAINAGE

TRAFFIC:

INITIAL DESIGN YEAR: 2001 **DAILY VOLUME (AADT):** 16,600

FINAL DESIGN YEAR: 2021 **DAILY VOLUME (AADT):** 28,200

COMMENTS:

PREPARED BY: ROXANA ENE LE I

PROJECT COSTS

A. RIGHT - OF - WAY

1. PROPERTY (Land and Easements)	$ 0
2. DISPLACEMENTS	$ 0
3. OTHER COST	$ 0
SUBTOTAL	**$ 0**

B. REIMBURSABLE UTILITIES

1. RAILROAD	$ 0
2. TRANSMISSION LINES	$ 0
3. SERVICES	$ 0
SUBTOTAL	**$ 0**

C. MAJOR STRUCTURES

1. WALLS	$ 0
2. BRIDGE STREAM CROSSING	$ 0
3. BRIDGE OVER/UNDERPASS	$ 0
4. BOX CULVERTS	$ 0
SUBTOTAL	**$ 0**

D. GRADING AND DRAINAGE

1. EARTHWORK	
a. UNCLASSIFIED EXCAVATION SOIL	$ 91,000
52,000 CY @ $1.76	
b. UNCLASSIFIED EXCAVATION ROCK	$ 20,000
5,000 CY @ $4.00	
c. BORROW EXCAVATION	$ 0
0 CY @ $3.00	
2. DRAINAGE	
a. MINOR DRAINAGE (Including Cross Drain Pipes & Longitudinal System)	$ 40,000
1.000 MILES @ $39,960	
b. CURB AND GUTTER	$ 0
0 LF @ $9.27	
SUBTOTAL	**$ 151,000**

PROJECT COSTS
con't.

E. BASE AND PAVING

1. GRADED AGGREGATE BASE	$ 168,000
12.00" -- 13,517 T @ $12.40	
2. ASPHALT PAVING	
a. ASPHALTIC CONCRETE "E"	$ 130,000
1.50" -- 4,048 T @ $32.22	
b. ASPHALTIC CONCRETE "B"	$ 172,000
2.00" -- 5,397 T @ $31.87	
c. ASPHALTIC CONCRETE BASE	$ 225,000
9.00" -- 7,286 T @ $30.85	
d. BITUMINOUS TACK COAT	$ 3,000
3,755 G @ $0.85	
3. CONCRETE PAVING	$ 0
4. OTHER PAVING	$ 70,000
SUBTOTAL	**$ 768,000**

F. LUMP ITEMS

1. TRAFFIC CONTROL	$ 4,000
2. CLEARING AND GRUBBING	$ 142,000
30 ACRES @ $4,700	
3. LANDSCAPING	$ 18,000
1.000 MILES @ $18,000	
4. EROSION CONTROL	$ 24,000
1.000 MILES @ $24,000	
5. DETOURS (Including Temporary Bridges)	$ 0
SUBTOTAL	**$ 188,000**

G. MISCELLANEOUS

1. SIGNING/STRIPING	$ 30,000
1.000 MILES @ $30,000	
2. GUARDRAIL	$ 0
0 LF @ $11.46 + 0 Anchors @ $1,326.82	
3. OTHER	$ 35,000
1.000 MILES @ $35,100	
SUBTOTAL	**$ 65,000**

H. SPECIAL FEATURES	**$ 0**

ESTIMATE SUMMARY

		SECTION COST (per mile)
A. RIGHT-OF-WAY	**$ 0**	$ 0
B. REIMBURSABLE UTILITIES	**$ 0**	$ 0

CONSTRUCTION COST SUMMARY

C. MAJOR STRUCTURES	$ 0	
D. GRADING AND DRAINAGE	$ 151,000	
E. BASE AND PAVING	$ 768,000	
F. LUMP ITEMS	$ 188,000	
G. MISCELLANEOUS	$ 65,000	
H. SPECIAL FEATURES	$ 0	
SUBTOTAL CONSTRUCTION COST	**$ 1,172,000**	$ 1,172,000
E. & C. (10%)	$ 117,000	
INFLATION 2 yr(s) @ 5% per year	$ 132,000	
TOTAL CONSTRUCTION COST	**$ 1,421,000**	$ 1,421,000
GRAND TOTAL CONSTRUCTION COST	**$ 1,421,000**	**$ 1,421,000**

RURAL WIDENING-2 TO 4 LANES WITH 44' DIV MEDIAN (48' PAV'T)

PRELIMINARY COST ESTIMATE
OFFICE OF ENVIRONMENT/LOCATION

P.I. NO: 222570 **DATE:** 08-27-1996

PROJECT NO: EDS-441(44)

PROJECT NAME: US441/SR24 IMPROVEMENTS

COUNTY: MORGAN

PROJECT DESCRIPTION:
US441/SR24 IMPROVEMENTS FROM PUTNAM/MORGAN COUNTY
LINE TO MADISON BYPASS

PROJECT LENGTH: 8.600 MILES **SECTION LENGTH:** 1.000 MILES

TYPICAL SECTION:
RURAL NEW LOCATION-4-LANES WITH 20' RAISED MEDIAN (48' PAV'T)
PROPOSED R / W = 150 ft

EXISTING ROADWAY (If Applicable):
2 LANES WITH OPEN DITCH DRAINAGE

TRAFFIC:

INITIAL DESIGN YEAR: 2001 **DAILY VOLUME (AADT):** 23,800

FINAL DESIGN YEAR: 2021 **DAILY VOLUME (AADT):** 40,450

COMMENTS:

PREPARED BY: ROXANA ENE TE I

PROJECT COSTS

A. RIGHT - OF - WAY

1. PROPERTY (Land and Easements)	$ 0
2. DISPLACEMENTS	$ 0
3. OTHER COST	$ 0
SUBTOTAL	$ 0

B. REIMBURSABLE UTILITIES

1. RAILROAD	$ 0
2. TRANSMISSION LINES	$ 0
3. SERVICES	$ 0
SUBTOTAL	$ 0

C. MAJOR STRUCTURES

1. WALLS	$ 0
2. BRIDGE STREAM CROSSING	$ 0
3. BRIDGE OVER/UNDERPASS WIDEN EXISTING BRIDGE AT I-20	$ 1,152,239
4. BOX CULVERTS	$ 0
SUBTOTAL	$ 1,152,000

D. GRADING AND DRAINAGE

1. EARTHWORK	
a. UNCLASSIFIED EXCAVATION SOIL 40,000 CY @ $1.84	$ 73,000
b. UNCLASSIFIED EXCAVATION ROCK 4,000 CY @ $4.00	$ 16,000
c. BORROW EXCAVATION 0 CY @ $3.00	$ 0
2. DRAINAGE	
a. MINOR DRAINAGE (Including Cross Drain Pipes & Longitudinal System) 1.000 MILES @ $68,040	$ 68,000
b. CURB AND GUTTER 0 LF @ $9.27	$ 0
SUBTOTAL	$ 157,000

PROJECT COSTS
con't.

E. BASE AND PAVING

1. GRADED AGGREGATE BASE	$ 283,000
12.00" -- 22,810 T @ $12.40	
2. ASPHALT PAVING	
a. ASPHALTIC CONCRETE "E"	$ 98,000
1.50" -- 3,036 T @ $32.22	
b. ASPHALTIC CONCRETE "B"	$ 129,000
2.00" -- 4,048 T @ $31.87	
c. ASPHALTIC CONCRETE BASE	$ 500,000
10.00" -- 16,192 T @ $30.85	
d. BITUMINOUS TACK COAT	$ 4,000
5,224 G @ $0.85	
3. CONCRETE PAVING	$ 0
4. OTHER PAVING	$ 101,000
SUBTOTAL	**$ 1,115,000**

F. LUMP ITEMS

1. TRAFFIC CONTROL	$ 10,000
2. CLEARING AND GRUBBING	$ 85,000
18 ACRES @ $4,700	
3. LANDSCAPING	$ 86,000
1.000 MILES @ $86,040	
4. EROSION CONTROL	$ 46,000
1.000 MILES @ $46,050	
5. DETOURS (Including Temporary Bridges)	$ 0
SUBTOTAL	**$ 227,000**

G. MISCELLANEOUS

1. SIGNING/STRIPING	$ 37,000
1.000 MILES @ $37,000	
2. GUARDRAIL	$ 14,000
800 LF @ $11.46 + 4 Anchors @ $1,326.82	
3. OTHER	$ 120,000
1.000 MILES @ $120,000	
SUBTOTAL	**$ 171,000**

H. SPECIAL FEATURES	**$ 0**

ESTIMATE SUMMARY

		SECTION COST (per mile)
A. RIGHT-OF-WAY	**$ 0**	$ 0
B. REIMBURSABLE UTILITIES	**$ 0**	$ 0

CONSTRUCTION COST SUMMARY

C. MAJOR STRUCTURES	$ 1,152,000	
D. GRADING AND DRAINAGE	$ 157,000	
E. BASE AND PAVING	$ 1,115,000	
F. LUMP ITEMS	$ 227,000	
G. MISCELLANEOUS	$ 171,000	
H. SPECIAL FEATURES	$ 0	
SUBTOTAL CONSTRUCTION COST	**$ 2,822,000**	$ 2,822,000
E. & C. (10%)	$ 282,000	
INFLATION 2 yr(s) @ 5% per year	$ 318,000	
TOTAL CONSTRUCTION COST	**$ 3,422,000**	$ 3,422,000
GRAND TOTAL CONSTRUCTION COST	**$ 3,422,000**	**$ 3,422,000**

RURAL NEW LOCATION-4-LANES WITH 20' RAISED MEDIAN (48' PAV'T)

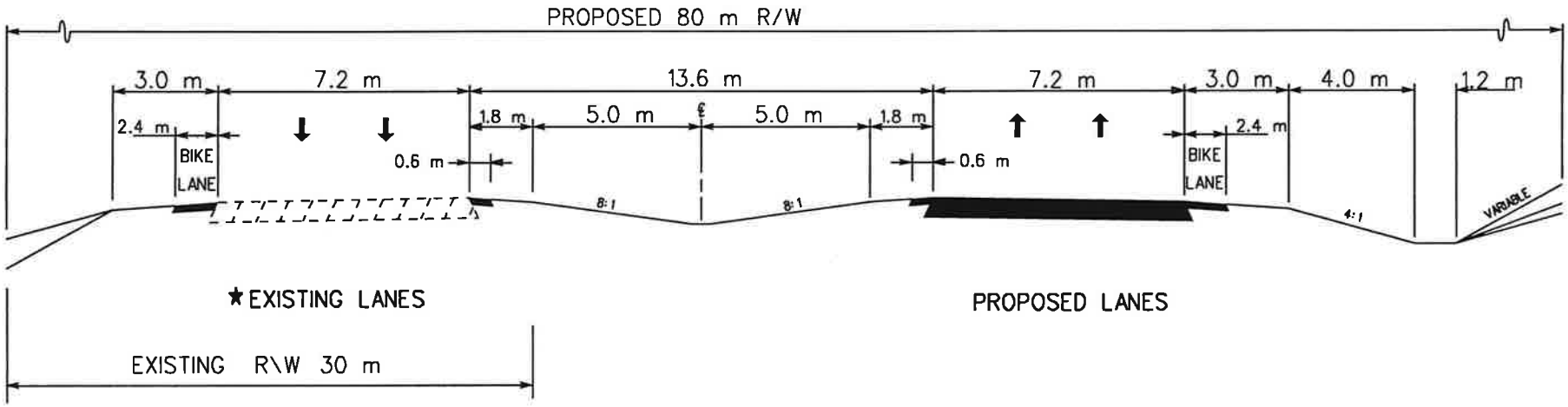

TYPICAL CROSS SECTION
IMROVEMENTS TO U.S. 441
EDS-441(44) MORGAN COUNTY
FROM THE BEGIN OF PROJECT TO C.R. 126 (HALLS LN)

NOT TO SCALE

NOTE: * EXISTING PAVEMENT WILL BE REMOVED IF VERTICAL RECONSTRUCTION REQ'D.

TS10

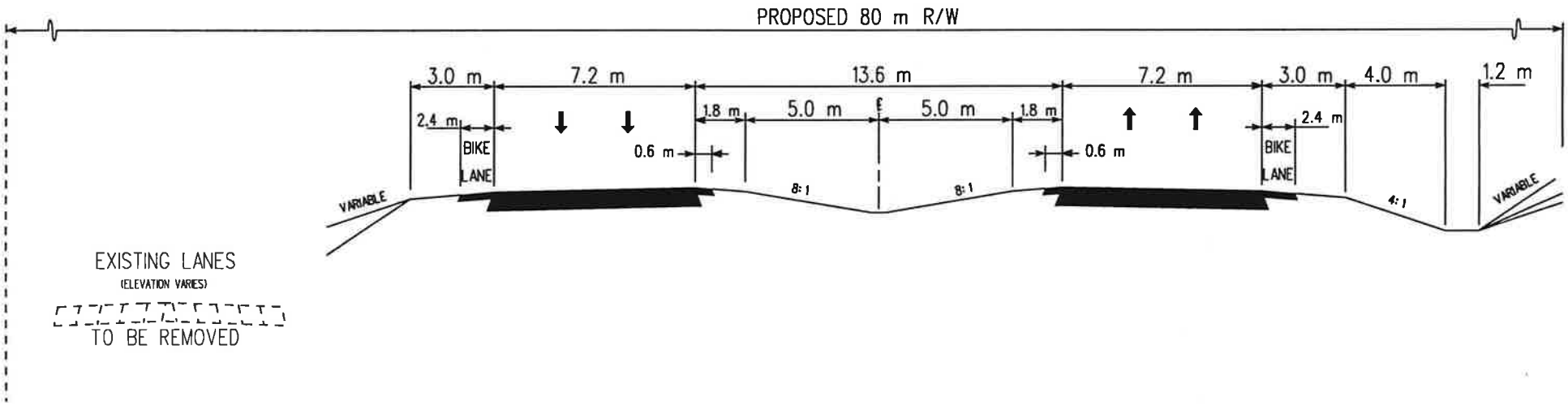

TYPICAL CROSS SECTION
IMPROVEMENTS TO U.S. 441
EDS-441(44) MORGAN COUNTY

FROM CR 126 (HALLS LN.) TO CR 204 (HILL TOP RD)

NOT TO SCALE

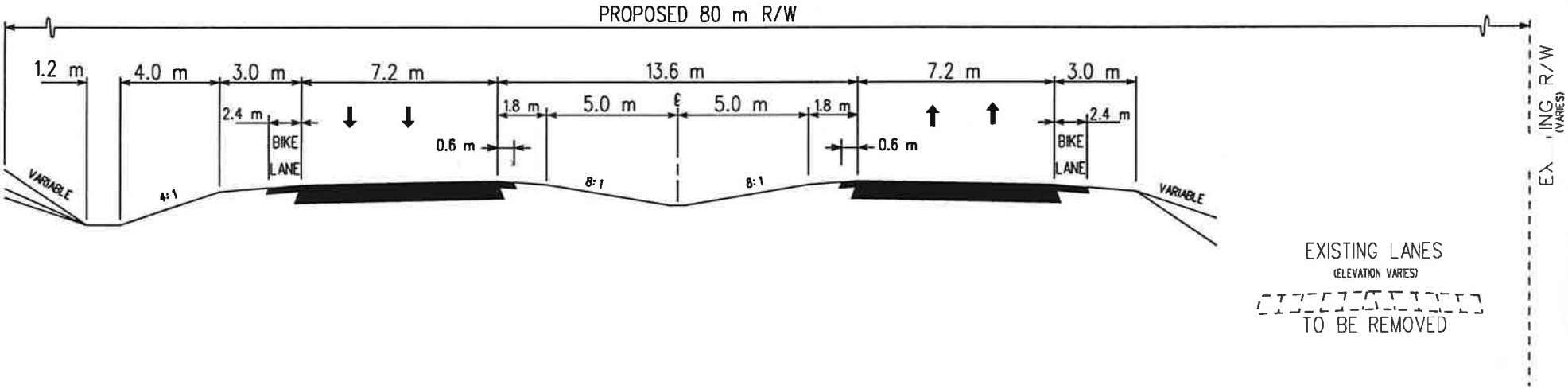

TYPICAL CROSS SECTION
IMPROVEMENTS TO U.S. 441
EDS–441(44) MORGAN COUNTY

FROM CR 204 (HILL TOP RD.) TO 0.6 km SOUTH OF CR 121

NOT TO SCALE

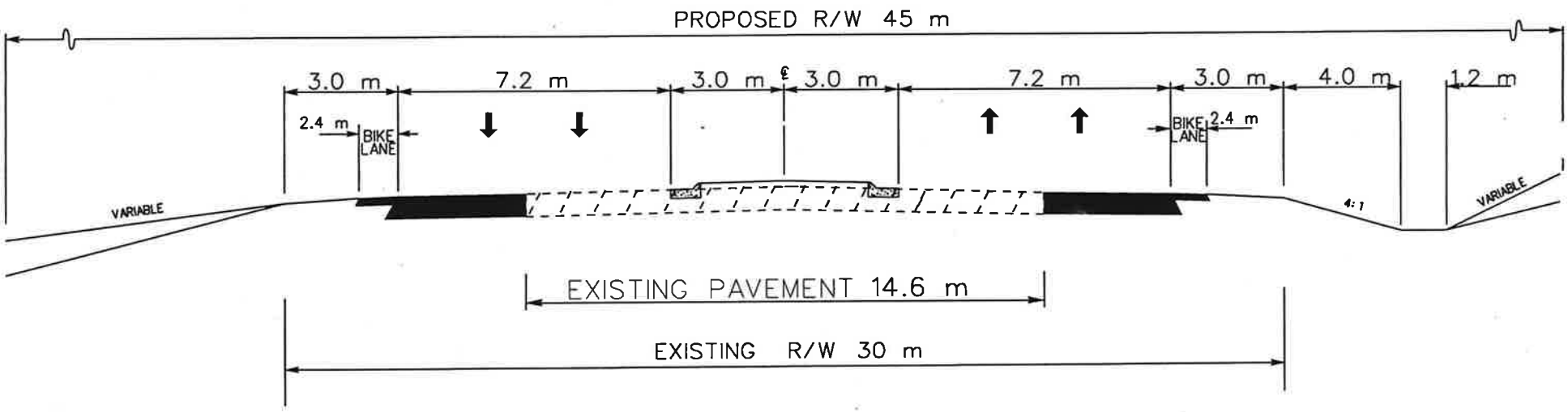

TYPICAL CROSS SECTION

IMPROVEMENTS TO US441
EDS-441(44), MORGAN COUNTY
FROM 0.6 km SOUTH OF CR 121 (PIERCE DAIRY RD.) TO THE END OF PROJECT

NOT TO SCALE

DEPARTMENT OF TRANSPORTATION
STATE OF GEORGIA

INTERDEPARTMENTAL CORRESPONDENCE

FILE EDS-441(40,45,44,42,43) Baldwin, Putnam, Morgan, & Oconee County
P.I. Numbers 222470, 222580, 222570, 222560, & 122660

OFFICE Environment/Location

DATE June 24, 1996

FROM Roxana Ene, TE I, Location Engineer

TO Distribution Below

SUBJECT **CONCEPT TEAM MEETING MINUTES** - US441\SR24 Improvements

On Thursday, June 20, 1996, at 1:30 p.m., a Concept Team Meeting for the proposed US441\SR24 improvement projects in Baldwin, Putnam, Morgan, and Oconee Counties was held in the conference room at the Office of Environment\Location. Representing Georgia Power was Charles L. Chapman. Wendell Dawson and Peter Mallory represented Oconee Co. In attendance from the City of Bishop was Mayor Nedra Johnson. State Representative Frank E. Stancil was also in attendance. Mike Reynolds, Kevin Hosey, Robert Reid and Willie L. Webb from the Office of Road Design were present. Pat Astin-Hand represented the Office of Right-of-Way. The Office of Planning was represented by Cindy VanDyke. Reba P. Scott from the Office of Programming was present. Representing Traffic Operations was Ken Estes. Terry Allgood represented the Walton EMC. In attendance from AT&T were Steve Puckett, Gary Jenkins and Damien Wilson. From NEGRDC were Jennifer Fire, Ruth Lessh and Adriane Wood from the MGRDC. District 1 was represented by Laland Owens and District 2 by David Griffith, Phillip Scarborough and Deborah Pennington. Warren Beverly, Gerald Welsh, Roxana Ene, Ken Thompson and Terry Dentmon of the Office of Environment/Location also attended.

The meeting was opened by Gerry Welsh of Location. He gave a brief description of the projects, explaining that the meeting was being held to discuss improvements to US441\SR24. The concepts were then described in detail by Roxana Ene.

Project EDS-441(40) is the proposed improvement to the existing US441/SR24. This project proposes to widen the existing roadway from 2 lanes to 4 with a 44 feet grassed median. The project begins in Baldwin Co. and extends north 10.4 miles to US129(SR44). At its beginning, the project extends the existing 5 ln.section to just north off the first bridge, where the concept begins transitioning to the 44'median. The concept would hold the existing pavement left, widening the right side of the existing road. Approx. 1 mile north of Cay road (CR245) the proposed alignment changes to the left side of the road to avoid a cemetery on the right side. Approx. 2200' north of Twin Bridges Road (CR72) the proposed alignment changes to the right side to avoid two historic boundaries. The proposed alignment changes to the left side of the road 4000' north of CR246 (Woodland Acres Rd.) to avoid impacting an historic boundary on the right side. Approx. 1200 ft. south of Crest View Rd. (CR247) the proposed alignment shifts left on new location, bridges the RR, avoids an historic boundary on the left side and goes back to widen

the existing road on the right side 1500' south of US129(SR44). The project ends at the Eatonton Bypass.

Design speed is 65MPH (100kph), proposed ROW is 250' (80m). Access control would be by permit. Less than 1 ac. of possible wetlands would be impacted. Seven houses, 2 commercial structures and 5 mobile homes would be displaced.

Project EDS-441(45) is the proposed improvement to the existing US441/SR24. This project proposes to widen the existing roadway from 2 lanes to 4 with a 44 feet grassed median. The project begins at Reids Road in Putnam County and extends north 8.87 miles to the county line At its beginning, the project holds the existing pavement left, widening the right side of the road. Approx. 1mile north of CR177 the concept begins to hold the existing R\W left to avoit an historic boundary on the left and 1400' north of Bethel Circle Road (CR148) the proposed alignment changes to the left side of the road to avoid an historic boundary (just north of Harmony Dr. on the right side of the road) and to minimize displacements. Just north of this historic boundary the concept shifts to the east side because of another historic boundary on the left side of the existing road and to avoid a cemetery on the same side. The project ends at the Putnam/Morgan County line, where the next section (44) begins.

Design speed is 65MPH (100kph), the proposed R/W is 250' (80m) for 44 ft. median. Access control would be by permit. Less than 1 acre of possible wetlands would be impacted. Thirty houses, 7mobile homes and 3 commercial structures would be displaced.

Project EDS-441(44) is the proposed improvement to the existing US441/SR24. This project proposes to widen the existing roadway from 2 lanes to 4 with a 44 feet grassed median. A 20 foot raised median would be used in some sections. The project begins at Putnam - Morgan County line and extends north 8.6 miles to Industrial Park Road (CR225). At its beginning, the project holds the existing pavement west , widening the east side to avoid a historic boundary on left. Approximately. 1000' south from CR204(Hilltop Rd.) alignment changes on the left side to minimize displacements and to avoid "Tucker family graves," an old historic monument. Approx. 2200' south of Pierce Dairy Road (CR121) the concept begins transitioning to a 20' raised median and ties into the existing 5 lane section. The project ends at Industrial Park Road (CR225).

Design speed is 65MPH (100kph), the proposed R/W is 250' (80m) for 44 foot median and 150' (46m) for the 20' raised median section. Access control would be by permit. No wetlands are impacted. Six houses, 1 commercial structure and 2 mobile homes would be displaced.

Project EDS-441(42) is the proposed improvements to the existing US441/SR24. This project proposes to widen the existing roadway from 2 lanes to 4 with a 44 feet grassed median. The project begins at the Madison Bypass and extends north approx. 7.72 miles to just north of the Apalachee River (Morgan-Occonee county line). The concept begins with a 20' raised median and approx. 800' north, the project starts transitioning in a 44' grassed median and holds the left existing R\W to avoid four historic boundaries on the left side of the existing road. Just north of the four historic boundaries the concept holds the left existing pavement widening to the right side. The alignment shifts to the left side 2300' south of CR174 (V.F.W. Lane) and shifts back to the right side 1500' north of CR174 to minimize displacements. The concept would hold the right side to a point 1500' south of CR170 (Apalachee Rd.) where it would shift approximately 600' left

to avoid two historic boundaries and the Southern Railway. Approx. 1000' south of CR177(Sidwell Road.), the project goes back to widen the right side of the existing road and holds this alignment to the end of the project just past the Apalachee River.

Design speed is 65MPH (100kph). The proposed R/W is 250' (80m) for 44 ft. median and 150' for 20' raised median. Access control would be by permit. Approx. 15.72 ac. of possible wetlands would be impacted. Nine houses, 1 commercial structure and 2 barns would be displaced.

Project EDS-441(43) is the proposed improvement to the existing US441/SR24. This project proposes to widen the existing roadway from 2 lanes to 4 with a 44 feet grassed median. The project begins just north of Apalachee River (Morgan/Oconee County line) and extends north for 9.47 miles. At its beginning, the concept would widen the east side of the road. Approx. 2500' north of the beginning of the project the alignment would shift left and hold this alignment to approx. 2000' north of CR116 (Tappan Spur Rd.) where the concept would change to hold the right side of the existing R/W to avoid the RR and historic boundaries at CR267 (Salem Rd.). Approx. 1700' north of CR110 (Old Farmington Rd.) the alignment would shift right to avoid an historic boundary on the left . The alignment would shift left 500' north of the historic boundary. Approximately1300' south of CR127 (Astondale Rd.) the concept would shift 500' left to minimize impacts with the City of Bishop and the Southern Railway. Approx. 1500' north of CR265 (Price Mill Rd.) the alignment would go back to widen the existing road on the left and hold this alignment to the end of the project.(approx. 2000' north off CR107 - Thomas Farm Rd.)

Design speed is 65MPH (100kph). The proposed R/W is 250' (80m) for 44 ft. median. Access control would be by permit. Less than 1 ac. of possible wetlands would be impacted. Ten houses, 2 commercial structures and 4 trailers would be displaced.

After review and description of the concepts, those in attendance were asked for their questions and comments.

COMMENTS:

Local Officials

Chairman of Oconee Co. asked about the schedule for these projects and if there is any priority. Answered that the schedule is late 1999, depending of the funding, and there is no priority.
The Chairman also mentioned an additional commercial site north of Bishop not shown on the photography, expensive to relocate.
The Mayor of Bishop asked to consider another alternative to bypass Bishop on the southeast side, where the railroad is abandoned. She also mentioned that the City of Bishop is historic as of 5\96 and she shown a map.
State Representative Stancil said that strongly supports the mayor and citizens of Bishop and the alternative they have requested. He does not feel the RR is usable. He also wanted the number of displacements for Bishop. Told him they are about twenty on the alignment as proposed. He asked about a through movement to the Madison BP. Told that would be handled by a different project, perhaps. Decision might depend upon traffic flow. We would discuss with management. Programming added that if it was decided that another project for this is needed, it should be put in the concept report.

EAB
Not in attendance.

Road Design
Asked about the 5 lane section at the beginning of EDS-441(40) and how far it would be taken. Discussion between Tenille District and road design revealed five lane section extends further than Location was aware (past the second bridge). It was decided that it would be better to begin the 44' median after the second bridge which has already been widened to 5 lanes.
Asked how many wet lands are on EDS-441(44). Told that on this unit there is no impact with wetlands. Road design asked if all units are on bike route. Answered yes. They also asked about an historic boundary at Rock Eagle 4H camp. Location will look into this. RDC asked to check with historic preservation about the area at Rock Eagle.

AT&T
No conflicts, but heavy presence in Bishop

Traffic Operations
Asked how many bypasses we were connecting to. Answered that we would be connecting to three bypasses. They also asked if we had pulled back far enough to make grades work at intersection near Rock Eagle? Answered yes.

District Offices
No comment.

Federal Resource Agencies
Not in attendance.

Engineering Services
Not in attendance.

Georgia Power
They are heavily impacted on EDS-441(42) & (43). Asked if state would allow placement of relocated facilities on R\W. Road design felt that that would be the case.

Materials and Research
Not in attendance.

Maintenance
Not in attendance.
Planning
Provided need and purpose statement. Explained GRIP and EDS.

Programming
Commented thet the high number of displacements called for a re-estimation of R\W costs. We said that the 250' of R\W we show to the public is "the worse case" and a R\W estimate will be requested as soon as we have a "firm" alignment.

Railroad
Not in attendance.

Office of Utilities
Not in attendance.
Schedule
Both projects scheduled to let to construction in late 1999.

Conclusions
Locals are enthusiastic about the projects and they asked do not let "Bishop situation" hold up projects.
RRE/re
Distribution: Wayne Hutto
Ronald Collins/Attn: Warren Bailey
Herman Griffin/Attn: Terry Rogers
Jim Kennerly
Toni Dunagan
Marion Waters
Bobby Mustin
Dudley Ellis
David Meshberger
Larry Seabrook
Bascombe Hughes
Harvey Keepler
Hugh Tyner/Gainesville District
Charles Norris/Tenille District
Luke Cousins

DEPARTMENT OF TRANSPORTATION
STATE OF GEORGIA
OFFICE OF ENVIRONMENT/LOCATION

PROJECT CONCEPT REPORT
EDS-441(44)
PUTNAM COUNTY
P.I. NO. 222570

US Route No.: 441 **Date of Report:** March 3, 1997

State Route No.: 24

RECOMMENDATION FOR APPROVAL

3/18/97
Date

State Environmental/Location Engineer

Date

State Road & Airport Design Engineer

Date

State Traffic Operations Engineer

4/1/97
Date

Charles W. Norman
District Engineer/Tennille

Date

Project Review Engineer

Date

State Bridge & Structural Design Engineer

DEPARTMENT OF TRANSPORTATION
STATE OF GEORGIA

RECEIVED
APR 2 1997
PRECONSTRUCTION

INTERDEPARTMENT CORRESPONDENCE

FILE EDS-441(42) Morgan County
P.I. No. 222560

OFFICE Atlanta, GA

DATE April 17, 1997

FROM James A. Kennedy, State Road & Airport Design Engineer HLA

TO C. Wayne Hutto, Assistant Preconstruction Engineer

SUBJECT Review of Project Concept Report

This office has reviewed the Project Concept Report for the above project and approves subject to the following comments:

1. Project designation should be "S/F" (state funded) rather than Non-CA or Exempt as checked in the report.
2. The sufficiency ratings for Hard Labor, Big Sandy and Apalachee Creek bridges are all very near 50, yet all are proposed to be widened. The suitability of these bridges for widening should be verified.
3. The typical sections should indicate the existing pavement crowned in the center, with overlay and leveling wiping out that crown since 80% of the project is being reconstructed. The typicals show the existing pavement with no crown.
4. Bike shoulders provided should be 2.4 m in width per recent Walker Scott letter.
5. No layouts were provided, so this review is on the report only, not the alignment or layout.

A signed cover sheet is provided for your use. If there are any questions, please contact Kevin Hosey at (404)657-9192.

JAK:KDH KDH
Attachment

cc: David Studstill
Charles Norris

QUALITY 1

DEPARTMENT OF TRANSPORTATION
STATE OF GEORGIA
OFFICE OF ENVIRONMENT/LOCATION

PROJECT CONCEPT REPORT
EDS-441(42)
MORGAN COUNTY
P.I. NO. 222560

US Route No.: 441 **Date of Report:** March 3, 1997

State Route No.: 24

RECOMMENDATION FOR APPROVAL

3/18/97
Date

State Environmental/Location Engineer

3-18/97
Date

State Road & Airport Design Engineer

Date

State Traffic Operations Engineer

Date

District Engineer/Tennille

Date

Project Review Engineer

Date

State Bridge & Structural Design Engineer

DEPARTMENT OF TRANSPORTATION
STATE OF GEORGIA
OFFICE OF ENVIRONMENT/LOCATION

PROJECT CONCEPT REPORT
EDS-441(44)
PUTNAM COUNTY
P.I. NO. 222570

US Route No.: 441 **Date of Report:** March 3, 1997

State Route No.: 24

RECOMMENDATION FOR APPROVAL

3/18/97
Date

State Environmental/Location Engineer

Date

State Road & Airport Design Engineer

Date

State Traffic Operations Engineer

Date

District Engineer/Tennille

Date

Project Review Engineer

May 2, 1997
Date

Paul V. Liles Jr.
State Bridge & Structural Design Engineer

D.O.T.66

DEPARTMENT OF TRANSPORTATION
STATE OF GEORGIA

RECEIVED 1997 PRECONSTRUCTION

INTERDEPARTMENT CORRESPONDENCE

FILE EDS-441 (44), Morgan Co.
P.I. No. 222570

OFFICE Traffic Operations
Atlanta, Georgia

DATE May 9, 1997

MGW PMA

FROM Marion G. Waters, III, P.E., State Traffic Operations Engineer

TO Wayne Hutto, Assistant Director of Preconstruction

SUBJECT Project Concept Report Review

We have reviewed the concept report on the above project for the proposed widening of SR 24/ US 441 from the Putnam/ Morgan county line to the Madison Bypass. The existing two lane roadway will be widened to a four lane section with either a 13.6 m grass median or a 6 m raised median. While we believe this concept will improve safety and operational capacity along this section of roadway, we recommend providing for the minimum clear recovery area in the cut sections for a 105 km/h speed design. With this, we find this report satisfactory for approval.

MGW:CKE

Attachment (signature page)

cc: David Studstill
James Kennerly
Bob Mustin, w/attachment
General Files

DEPARTMENT OF TRANSPORTATION
STATE OF GEORGIA
OFFICE OF ENVIRONMENT/LOCATION

PROJECT CONCEPT REPORT
EDS-441(44)
PUTNAM COUNTY
P.I. NO. 222570

US Route No.: 441 **Date of Report:** March 3, 1997

State Route No.: 24

RECOMMENDATION FOR APPROVAL

3/18/97
Date

State Environmental/Location Engineer

Date

State Road & Airport Design Engineer

5-12-97
Date

State Traffic Operations Engineer

Date

District Engineer/Tennille

Date

Project Review Engineer

Date

State Bridge & Structural Design Engineer