**ORIGINAL TO GENERAL FILES**

# DEPARTMENT OF TRANSPORTATION
# STATE OF GEORGIA

## OFFICE OF DESIGN POLICY & SUPPORT
## INTERDEPARTMENTAL CORRESPONDENCE

**FILE** P.I. #222285-
HPPNF-0540-00(029)
Washington County
SR 24/SR 540 Widening from CR 10/CR 342 to West of SR 68

**OFFICE** Design Policy & Support

**DATE** July 15, 2010
(corrected July 22, 2010)

**FROM** for Brent Story, State Design Policy Engineer

**TO** SEE DISTRIBUTION

**SUBJECT** **APPROVED REVISED CONCEPT REPORT**

Attached is the approved Revised Concept Report for the above subject project.

Attachment

DISTRIBUTION:

Genetha Rice-Singleton, Program Control Adminstrator
Ron Wishon, State Project Review Engineer
Glenn Bowman, State Environmental Administrator
Ken Thompson, Statewide Location Bureau Chief
Michael Henry, Systems & Classification Branch Chief
Kathy Zahul, State Traffic Operations Engineer
Angela Alexander, State Transportation Planning Administrator
Paul Liles, State Bridge Engineer
Bobby Hilliard, State Program Delivery Engineer
Angela Robinson, Financial Management Administrator
Jeff Baker, State Utilities Engineer
Jack (Gus) Cooper, Tennille District Utilities Engineer
George Brewer, Tennille District Preconstruction Engineer
Tony Collins, Tennille District Engineer
David Norwood, Project Manager
BOARD MEMBER - 12th Congressional District

# DEPARTMENT OF TRANSPORTATION
# STATE OF GEORGIA
# REVISED PROJECT CONCEPT REPORT

Project Number: HPPNF-0540-00(029)
County: Washington
P. I. Number: 222285
Federal Route Number: F44-1
State Route Number: 24

*1. PROJECT LIMITS:*
*It is proposed that the project should begin just west of Indian Trail Road (MP 30.61) and end just west of SR 68 (MP 22.15). This change would extend the beginning project limits westward 2900 feet.*
*2. MEDIAN WIDTH:*
*It is proposed that the median should be narrowed in width from 44-foot to 32-foot for approximately the first 3600 feet of the project.*

**Submitted for approval:**

DATE 6-28-10 Russell R. McMurry
Russell R. McMurry, State Roadway Design Engineer

DATE 6/28/10
Bobby Hilliard, State Program Delivery Engineer

DATE 6/28/10
David Norwood, Project Manager – Office of Program Delivery

**Recommendation for approval:**

DATE 03/17/2010 Glenn Bowman*/DRP
Glenn Bowman, State Environmental Administrator

DATE _____ N/A
Paul Liles, State Bridge Design Engineer

The concept as presented herein and submitted for approval is consistent with that which is included in the Regional Transportation Program (RTP) and/or the State Transportation Improvement Program (STIP).

DATE 04/02/2010 Angela Alexander*/DRP
Angela Alexander, State Transportation Planning
*Recommendation on file

# REVISED PROJECT CONCEPT REPORT

**Need and Purpose:** This project, along with other projects on the SR 24 GRIP corridor, is needed to fulfill a Georgia legislative requirement which designated this section of SR 24 as part of the Governor's Road Improvement Program. The legislation requires the GRIP corridors to be multi-laned to support economic development.

**Project location:** Project HPPNF-0540-00(029) is located in Washington County, near the city of Sandersville. The project currently begins at CR10/CR342/ Indian Trail Road (Milepost 30.12) and ends just west of SR 68 (Milepost 22.15). We request to extend the project beginning point westward to Milepost 30.61 and the project ending point would remain the same. The length of the project would increase to 8.497 miles.

**Description of the approved concept:** Project FLF-540(029) Washington County would begin at CR 10/ CR342/Indian Trail Road and proceed eastward to a point just west of SR 68 in Washington County, a distance of 8 miles. The new alignment would continue east, south of the existing SR 24 and tie back into the existing roadway near CR 285. Improvements would be south of the existing travel lanes to CR 291, where the widening would shift back to the north side to approximately 2800 feet west of CR 289. From that point to 2000 feet east of CR 6, SR 24 is proposed to be relocated and realigned to improve the existing vertical alignment. From 2000 feet east of CR 6 to 3500 feet west of CR 5, the proposed improvements would be on the north side of the existing roadway. At that point, the proposed widening would shift to the south side and continues east to tie into the existing four lane section just west of SR 68.

**PDP Classification:** Major ___X___ Minor_____

**Federal Oversight:** Full Oversight ( ), Exempt (X), State Funded ( ), or Other ( )

**Functional Classification:** Rural Principal Arterial

**U. S. Route Number(s):** N/A **State Route Number(s):** 24

**Traffic (AADT) as shown in the approved concept:**
Base Year: 4650 (1996)____ Design Year: 7550 (2016)___

**Updated traffic data (AADT):**
Base Year: 4350 (2012)____ Design Year: 6100 (2032)___

**Approved Programmed/Schedule:** P.E. FY 1996____ R/W: FY 2005___ Construction: Long Range__

**VE Study Required Yes (X) No ( ) Held:** January 24-26, 2006

**Benefit/Cost Ratio** 0.42

**Is the project located in an Ozone Non-attainment area? Yes ( ) No (X)**

**Is the project in a PM2.5 Non-Attainment area? Yes ( ) No (X)**

| Approved Features: | Proposed Features: |
|---|---|
| 1. *PROJECT LIMITS:* *Currently, the project extends from CR10/CR342 (Indian Trail Road) east to just west of SR 68.* | 1. *PROJECT LIMITS:* *It is proposed that the project should begin at a point just west of CR10/CR342/Indian Trail Road (MP 30.61 and end just west of SR 68 (MP 22.15). This change would extend the beginning project limits westward 2900 feet.* |
| 2. *MEDIAN WIDTH:* *Currently, a 44-foot median is maintained throughout the entirety of the project.* | 2. *MEDIAN WIDTH:* *It is proposed that the median should be narrowed in width from 44-foot to 32-foot for a length of approximately 3600 feet at the beginning of the project.* |

**Reason for Change:**

*Since the completion of the original concept report, several kaolin pits have been mined in the area adjacent to the proposed route at the beginning of the project. In order to avoid these pits, it is recommended that the project be realigned in this area. In order to tie this realigned route into the existing SR24, the beginning project limits must be extended approximately 2900 feet to milepost 30.61.*

*Furthermore, it is also recommended to reduce the median width in the area affected by this shift approximately 3600 feet at the beginning of the project from 44-feet to 32-feet to further minimize any conflicts with adjacent kaolin mine pits.*

| Updated Cost Estimate | |
|---|---|
| Construction including E&I | $ 42,044,297 |
| Construction including E&I, Fuel, and AC adj. | $50,566,540 |
| Fuel and Liquid AC Adjustment | $ 8,522,243 |
| Right-of-Way | No change |
| Utilities (reimbursable) | $ 551,395 |
| Utility Contingencies | $ 165,418 |

**Recommendation:** Recommend that the proposed revision to the concept be approved for implementation.

**Attachments:**

1. Sketch Map,
2. Cost Estimate,
3. Typical Sections

Concur: _____ 7/8/10
Director of Engineering — Date

Approve: _____ 7/14/10
Chief Engineer — Date

**Project Sketch Map**

| | |
|---|---|
| Project Number: | *HPPNF-0540-00(029)* |
| County: | *Washington* |
| PI Number: | *222285* |
| Federal Route No: | *F44-1* |
| State Route No: | *24* |

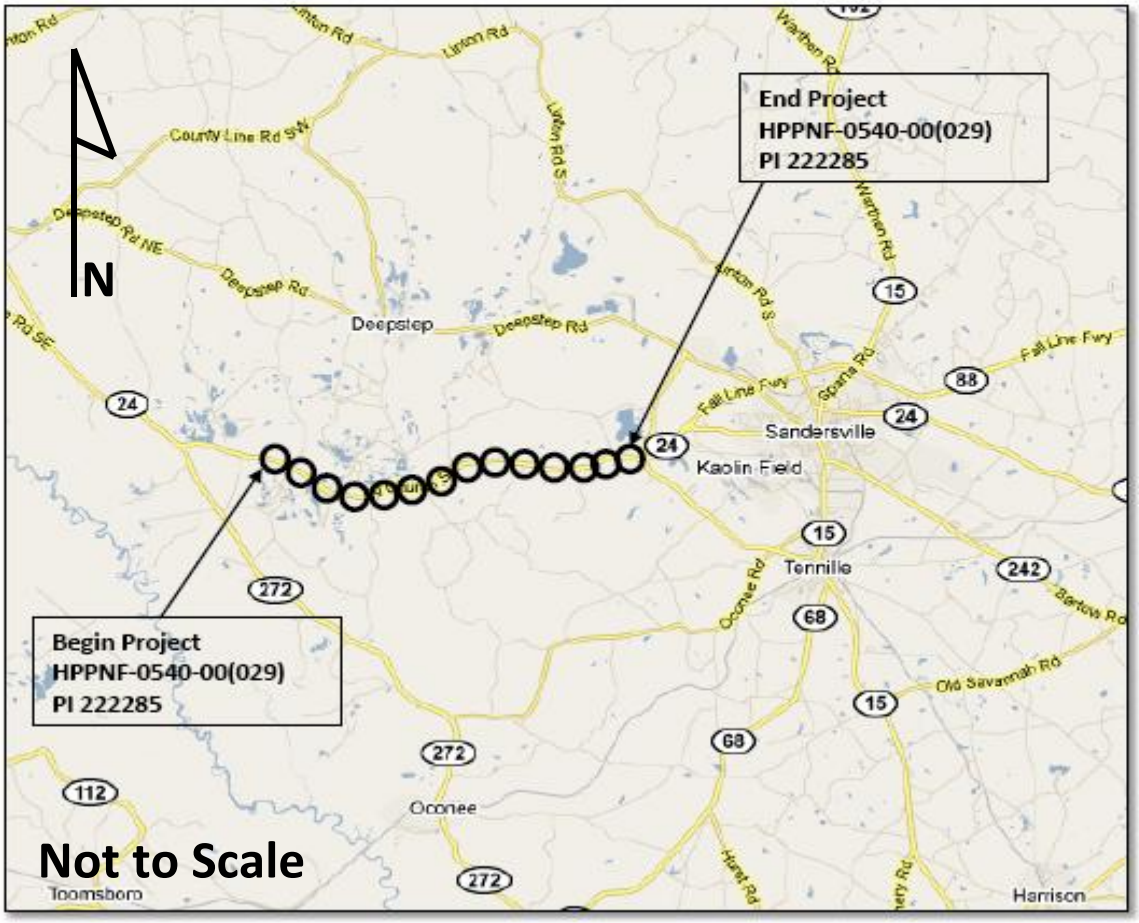

# DEPARTMENT OF TRANSPORTATION
# STATE OF GEORGIA

---

INTERDEPARTMENT CORRESPONDENCE

**FILE** PROJECT No. HPPNF-0540-00(029), Washington
SR24/SR 540 from CR 10/CR342 to just West of SR 68
P.I. No. 222285

**OFFICE Road Design**

**DATE** 1/13/2010

**FROM** Russell McMurry, P.E., State Roadway Design Engineer

**TO** Ronald E. Wishon, State Project Review Engineer

**SUBJECT REVISIONS TO PROGRAMMED COSTS**

PROJECT MANAGER Brad Ehrman, P.E.

MNGT LET DATE 7/16/2010

MNGT R/W DATE

| **PROGRAMMED COST (TPro W/OUT INFLATION)** | | **LAST ESTIMATE UPDATE** |
|---|---|---|
| CONSTRUCTION | $97,304,463.87 | DATE 10/5/2009 |
| RIGHT OF WAY | $3,148,080.06 | DATE 7/30/2004 |
| UTILITIES | $898,165.99 | DATE 10/5/2009 |

**REVISED COST ESTIMATES**

| | |
|---|---|
| CONSTRUCTION* | $52,168,226.91 |
| RIGHT OF WAY | $No Change |
| UTILITIES** | $716791.92 |

* Costs contain 5% Engineering and Inspection and 5% Construction Contingencies and Fuel and Liquid AC Adjustments.

** Costs contain 30% contingency.

**REASON FOR COST INCREASE Concept Report Revision**

## CONTINGENCY SUMMARY

| | | |
|---|---|---|
| Construction Cost Estimate: | $40,042,187.21 | (Base Estimate) |
| Engineering and Inspection: | $ 2,002,109.36 | (Base Estimate x 5 %) |
| Construction Contingency: | $1,601,687.49 | (Base Estimate x 4 %)<br>(The Construction Contingency is based on the Project Improvement Type in TPro.) |
| Total Fuel Adjustment | $ 4,603,499.95 | (From attached worksheet) |
| Total Liquid AC Adjustment | $ 3,918,742.90 | (From attached worksheet) |
| **Construction Total:** | $52,168,226.91 | |
| Utility Cost Estimate: | $551,395.96 | |
| Utility Contingency: | $165,395.96 | 30 % |
| **Utility Total:** | $716,791.92 | |

## REIMBURSABLE UTILITY COST

| Utility Owner | Reimbursable Costs |
|---|---|
| Washington EMC | $ 5,551,395.96 |
| | |
| | |
| | |
| | |
| | |
| | |
| | |
| | |
| | |
| | |

Attachments

# Estimate Report for file "222285_(2009-9-18) (Washington County)_2009-09-25"

**Section Roadway Items**

| Item Number | Quantity | Units | Unit Price | Item Description | Cost |
|---|---|---|---|---|---|
| 150-1000 | 1 | LS | 512038.0 | TRAFFIC CONTROL - HPPNF-0540-00(029) | 512038.0 |
| 153-1300 | 1 | EA | 73914.48 | FIELD ENGINEERS OFFICE TP 3 | 73914.48 |
| 201-1500 | 1 | LS | 3630461.5 | CLEARING & GRUBBING - HPPNF-0540-00 (029) | 3630461.5 |
| 205-0001 | 1884379 | CY | 4.5 | UNCLASS EXCAV | 8479705.5 |
| 207-0203 | 512 | CY | 44.73 | FOUND BKFILL MATL, TP II | 22901.76 |
| 212-1000 | 13550 | CY | 16.81 | GRANULAR EMBANKMENT, INCL MATL & HAUL | 227775.49 |
| 310-1101 | 262038 | TN | 14.97 | GR AGGR BASE CRS, INCL MATL | 3922708.86 |
| 318-3000 | 1000 | TN | 17.09 | AGGR SURF CRS | 17090.0 |
| 402-3113 | 36139 | TN | 127.05 | RECYCLED ASPH CONC 12.5 MM SUPERPAVE, GP 1 OR 2, INCL BITUM MATL & H LIME | 4591459.95 |
| 402-3121 | 72936 | TN | 52.4 | RECYCLED ASPH CONC 25 MM SUPERPAVE, GP 1 OR 2, INCL BITUM MATL & H LIME | 3821846.4 |
| 402-3190 | 48830 | TN | 58.48 | RECYCLED ASPH CONC 19 MM SUPERPAVE, GP 1 OR 2,INCL BITUM MATL & H LIME | 2855578.4 |
| 413-1000 | 38473 | GL | 1.7 | BITUM TACK COAT | 65404.1 |
| 433-1200 | 1153 | SY | 160.24 | REINF CONC APPROACH SLAB, INCL SLOPED EDGE | 184756.72 |
| 436-1000 | 2381 | LF | 9.88 | ASPHALTIC CONCRETE CURB - | 23524.28 |
| 441-0204 | 40240 | SY | 23.49 | PLAIN CONC DITCH PAVING, 4 IN | 945237.6 |
| 441-0303 | 8 | EA | 1691.99 | CONC SPILLWAY, TP 3 | 13535.92 |
| 456-2012 | 16 | GLM | 730.89 | INDENTATION RUMBLE STRIPS - GROUND-IN-PLACE (CONTINUOUS) | 11694.24 |
| 500-3101 | 639 | CY | 238.02 | CLASS A CONCRETE | 152094.78 |
| 500-3200 | 296 | CY | 346.53 | CLASS B CONCRETE | 102572.87 |
| 500-3800 | 59 | CY | 653.93 | CLASS A CONCRETE, INCL REINF STEEL | 38581.86 |
| 511-1000 | 71348 | LB | 0.89 | BAR REINF STEEL | 63499.72 |
| 550-1180 | 18388 | LF | 36.27 | STORM DRAIN PIPE, 18 IN, H 1-10 | 666932.76 |
| 550-1181 | 393 | LF | 53.99 | STORM DRAIN PIPE, 18 IN, H 10-15 | 21218.07 |
| 550-1240 | 1002 | LF | 41.79 | STORM DRAIN PIPE, 24 IN, H 1-10 | 41873.58 |
| 550-1241 | 465 | LF | 53.45 | STORM DRAIN PIPE, 24 IN, H 10-15 | 24854.25 |
| 550-1244 | 81 | LF | 74.1 | STORM DRAIN PIPE, 24 IN, H 25-30 | 6002.09 |
| 550-1300 | 194 | LF | 41.54 | STORM DRAIN PIPE, 30 IN, H 1-10 | 8058.76 |
| 550-1302 | 195 | LF | 57.46 | STORM DRAIN PIPE, 30 IN, H 15-20 | 11204.7 |
| 550-1360 | 689 | LF | 62.22 | STORM DRAIN PIPE, 36 IN, H 1-10 | 42869.58 |
| 550-1362 | 607 | LF | 76.67 | STORM DRAIN PIPE, 36 IN, H 15-20 | 46538.69 |
| 550-1364 | 287 | LF | 160.95 | STORM DRAIN PIPE, 36 IN, H 25-30 | 46192.64 |
| 550-1365 | 182 | LF | 160.95 | STORM DRAIN PIPE, 36 IN, H 30-35 | 29292.89 |
| 550-1367 | 404 | LF | 160.95 | STORM DRAIN PIPE, 36 IN, H 40-50 | 65023.79 |
| 550-1424 | 195 | LF | 160.0 | STORM DRAIN PIPE, 42 IN, H 25-30 | 31200.0 |
| 550-1425 | 247 | LF | 160.95 | STORM DRAIN PIPE, 42 IN, H 30-35 | 39754.64 |
| 550-1482 | 672 | LF | 83.6 | STORM DRAIN PIPE, 48 IN, H 15-20 | 56179.2 |
| 550-1724 | 175 | LF | 200.0 | STORM DRAIN PIPE, 72 IN, H 25-30 | 35000.0 |
| 550-2180 | 4916 | LF | 33.24 | SIDE DRAIN PIPE, 18 IN, H 1-10 | 163407.84 |
| 550-2240 | 727 | LF | 32.24 | SIDE DRAIN PIPE, 24 IN, H 1-10 | 23438.48 |
| 550-3418 | 152 | EA | 562.15 | SAFETY END SECTION 18 IN, SIDE DRAIN, 4:1 SLOPE | 85446.8 |
| 550-3424 | 14 | EA | 497.39 | SAFETY END SECTION 24 IN, SIDE DRAIN, 4:1 SLOPE | 6963.46 |
| 550-4130 | 1 | EA | 540.36 | FLARED END SECTION 30 IN, SIDE DRAIN | 540.36 |
| 550-4218 | 110 | EA | 551.07 | FLARED END SECTION 18 IN, STORM DRAIN | 60617.70 |
| 550-4224 | 7 | EA | 643.26 | FLARED END SECTION 24 IN, STORM DRAIN | 4502.82 |
| 550-4230 | 1 | EA | 719.5 | FLARED END SECTION 30 IN, STORM DRAIN | 719.5 |
| 550-4242 | 2 | EA | 1976.33 | FLARED END SECTION 42 IN, STORM DRAIN | 3952.66 |
| 603-2018 | 2007 | SY | 32.03 | STN DUMPED RIP RAP, TP 1, 18 IN | 64284.21 |
| 603-2180 | 415 | SY | 29.95 | STN DUMPED RIP RAP, TP 3, 12 IN | 12429.25 |
| 603-6006 | 19 | SY | 70.15 | SAND-CEMENT BAG RIP RAP, 6 IN | 1332.85 |
| 603-7000 | 3960 | SY | 3.8 | PLASTIC FILTER FABRIC | 15048.0 |
| 634-1200 | 302 | EA | 93.93 | RIGHT OF WAY MARKERS | 28366.86 |
| 641-1100 | 315 | LF | 52.35 | GUARDRAIL, TP T | 16490.25 |
| 641-1200 | 20286 | LF | 17.89 | GUARDRAIL, TP W | 362916.54 |
| 641-5001 | 49 | EA | 673.15 | GUARDRAIL ANCHORAGE, TP 1 | 32984.35 |
| 641-5012 | 28 | EA | 1762.58 | GUARDRAIL ANCHORAGE, TP 12 | 49352.24 |

| | | | | | |
|---|---|---|---|---|---|
| 643-8200 | 7400 | LF | 2.21 | BARRIER FENCE (ORANGE), 4 FT | 16354.0 |
| 668-2100 | 128 | EA | 2360.78 | DROP INLET, GP 1 | 302179.84 |
| 668-2105 | 2 | EA | 3485.0 | DROP INLET, GP 1, SPCL DES | 6970.0 |
| 668-2110 | 190 | LF | 196.09 | DROP INLET, GP 1, ADDL DEPTH | 37257.1 |
| 668-2200 | 1 | EA | 3111.45 | DROP INLET, GP 2 | 3111.45 |
| 668-2210 | 24 | LF | 244.95 | DROP INLET, GP 2, ADDL DEPTH | 5878.79 |
| 668-4300 | 1 | EA | 2269.9 | STORM SEWER MANHOLE, TP 1 | 2269.9 |
| 668-4311 | 4 | LF | 210.85 | STORM SEWER MANHOLE, TP 1, ADDL DEPTH, CL 1 | 843.4 |
| 668-4312 | 10 | LF | 207.49 | STORM SEWER MANHOLE, TP 1, ADDL DEPTH, CL 2 | 2074.9 |
| 668-4313 | 10 | LF | 175.0 | STORM SEWER MANHOLE, TP 1, ADDL DEPTH, CL 3 | 1750.0 |
| 668-6000 | 5 | EA | 3559.12 | SPRING BOX | 17795.6 |
| | | | | **Section Sub Total:** | **$32,257,857.31** |

**Section Permanent Erosion Control**

| Item Number | Quantity | Units | Unit Price | Item Description | Cost |
|---|---|---|---|---|---|
| 163-0240 | 875 | TN | 129.9 | MULCH | 113662.5 |
| 603-2024 | 365 | SY | 40.6 | STN DUMPED RIP RAP, TP 1, 24 IN | 14819.0 |
| 603-2181 | 9689 | SY | 30.56 | STN DUMPED RIP RAP, TP 3, 18 IN | 296095.83 |
| 700-6910 | 292 | AC | 674.07 | PERMANENT GRASSING | 196828.44 |
| 700-7000 | 875 | TN | 60.51 | AGRICULTURAL LIME | 52946.25 |
| 700-7010 | 730 | GL | 20.53 | LIQUID LIME | 14986.90 |
| 700-8000 | 350 | TN | 409.57 | FERTILIZER MIXED GRADE | 143349.5 |
| 700-8100 | 29180 | LB | 2.3 | FERTILIZER NITROGEN CONTENT | 67114.0 |
| 710-9000 | 68808 | SY | 2.49 | PERMANENT SOIL REINFORCING MAT | 171331.92 |
| 716-2000 | 76968 | SY | 0.95 | EROSION CONTROL MATS, SLOPES | 73119.59 |
| | | | | **Section Sub Total:** | **$1,144,253.95** |

**Section Temporary Erosion Control**

| Item Number | Quantity | Units | Unit Price | Item Description | Cost |
|---|---|---|---|---|---|
| 163-0232 | 487 | AC | 283.37 | TEMPORARY GRASSING | 138001.19 |
| 163-0240 | 3844 | TN | 129.9 | MULCH | 499335.60 |
| 163-0300 | 53 | EA | 1148.7 | CONSTRUCTION EXIT | 60881.10 |
| 163-0501 | 2 | EA | 839.99 | CONSTRUCT AND REMOVE SILT CONTROL GATE, TP 1 | 1679.98 |
| 163-0503 | 28 | EA | 442.2 | CONSTRUCT AND REMOVE SILT CONTROL GATE, TP 3 | 12381.6 |
| 163-0520 | 2395 | LF | 12.55 | CONSTRUCT AND REMOVE TEMPORARY PIPE SLOPE DRAIN | 30057.25 |
| 163-0527 | 1310 | EA | 174.88 | CONSTRUCT AND REMOVE RIP RAP CHECK DAMS, STONE PLAIN RIP RAP/SAND BAGS | 229092.8 |
| 163-0528 | 33120 | LF | 2.55 | CONSTRUCT AND REMOVE FABRIC CHECK DAM - TYPE C SILT FENCE | 84456.0 |
| 163-0529 | 19292 | LF | 3.37 | CONSTRUCT AND REMOVE TEMPORARY SEDIMENT BARRIER OR BALED STRAW CHECK DAM | 65014.04 |
| 163-0531 | 1 | EA | 7381.63 | CONSTRUCT AND REMOVE SEDIMENT BASIN, TP 1, STA NO - 93+00 LT | 7381.63 |
| 163-0531 | 1 | EA | 4717.11 | CONSTRUCT AND REMOVE SEDIMENT BASIN, TP 1, STA NO - 355+00 RT | 4717.11 |
| 163-0531 | 1 | EA | 4717.11 | CONSTRUCT AND REMOVE SEDIMENT BASIN, TP 1, STA NO - 355+00 LT | 4717.11 |
| 163-0531 | 1 | EA | 7381.63 | CONSTRUCT AND REMOVE SEDIMENT BASIN, TP 1, STA NO - 119+00 LT | 7381.63 |
| 163-0531 | 1 | EA | 7381.63 | CONSTRUCT AND REMOVE SEDIMENT BASIN, TP 1, STA NO - 121+50 RT | 7381.63 |
| 163-0531 | 1 | EA | 7381.63 | CONSTRUCT AND REMOVE SEDIMENT BASIN, TP 1, STA NO - 159+50 RT | 7381.63 |
| 163-0531 | 1 | EA | 7381.63 | CONSTRUCT AND REMOVE SEDIMENT BASIN, TP 1, STA NO - 160+00 LT | 7381.63 |
| 163-0531 | 1 | EA | 7381.63 | CONSTRUCT AND REMOVE SEDIMENT BASIN, TP 1, STA NO - 283+50 CL | 7381.63 |
| 163-0531 | 1 | EA | 7381.63 | CONSTRUCT AND REMOVE SEDIMENT BASIN, TP 1, STA NO - 291+00 CL | 7381.63 |
| 163-0541 | 6 | EA | 594.21 | CONSTRUCT AND REMOVE ROCK FILTER | 3565.26 |

| | | | | | |
|---|---|---|---|---|---|
| | | | | DAMS | |
| 163-0542 | 82 | EA | 956.25 | CONSTRUCT AND REMOVE STONE FILTER RING | 78412.5 |
| 163-0550 | 134 | EA | 188.29 | CONSTRUCT AND REMOVE INLET SEDIMENT TRAP | 25230.86 |
| 165-0010 | 40261 | LF | 0.53 | MAINTENANCE OF TEMPORARY SILT FENCE, TP A | 21338.33 |
| 165-0030 | 72055 | LF | 0.66 | MAINTENANCE OF TEMPORARY SILT FENCE, TP C | 47556.3 |
| 165-0041 | 24720 | LF | 2.03 | MAINTENANCE OF CHECK DAMS - ALL TYPES | 50181.6 |
| 165-0060 | 1 | EA | 1425.23 | MAINTENANCE OF TEMPORARY SEDIMENT BASIN, STA NO - 355+00 RT | 1425.23 |
| 165-0060 | 1 | EA | 1425.23 | MAINTENANCE OF TEMPORARY SEDIMENT BASIN, STA NO - 355+00 LT | 1425.23 |
| 165-0060 | 1 | EA | 1425.23 | MAINTENANCE OF TEMPORARY SEDIMENT BASIN, STA NO - 93+00 LT | 1425.23 |
| 165-0060 | 1 | EA | 1425.23 | MAINTENANCE OF TEMPORARY SEDIMENT BASIN, STA NO - 119+00 LT | 1425.23 |
| 165-0060 | 1 | EA | 1425.23 | MAINTENANCE OF TEMPORARY SEDIMENT BASIN, STA NO - 121+50 RT | 1425.23 |
| 165-0060 | 1 | EA | 1425.23 | MAINTENANCE OF TEMPORARY SEDIMENT BASIN, STA NO - 159+50 RT | 1425.23 |
| 165-0060 | 1 | EA | 1425.23 | MAINTENANCE OF TEMPORARY SEDIMENT BASIN, STA NO - 160+00 LT | 1425.23 |
| 165-0060 | 1 | EA | 1425.23 | MAINTENANCE OF TEMPORARY SEDIMENT BASIN, STA NO - 283+50 CL | 1425.23 |
| 165-0060 | 1 | EA | 1425.23 | MAINTENANCE OF TEMPORARY SEDIMENT BASIN, STA NO - 291+00 CL | 1425.23 |
| 165-0071 | 9646 | LF | 0.85 | MAINTENANCE OF SEDIMENT BARRIER - BALED STRAW | 8199.1 |
| 165-0085 | 2 | EA | 339.92 | MAINTENANCE OF SILT CONTROL GATE, TP 1 | 679.84 |
| 165-0087 | 28 | EA | 113.48 | MAINTENANCE OF SILT CONTROL GATE, TP 3 | 3177.44 |
| 165-0101 | 53 | EA | 481.34 | MAINTENANCE OF CONSTRUCTION EXIT | 25511.02 |
| 165-0105 | 134 | EA | 78.69 | MAINTENANCE OF INLET SEDIMENT TRAP | 10544.46 |
| 165-0110 | 6 | EA | 145.2 | MAINTENANCE OF ROCK FILTER DAM | 871.19 |
| 165-0111 | 82 | EA | 137.69 | MAINTENANCE OF STONE FILTER RING | 11290.58 |
| 167-1000 | 2 | EA | 400.8 | WATER QUALITY MONITORING AND SAMPLING | 801.6 |
| 167-1500 | 30 | MO | 685.8 | WATER QUALITY INSPECTIONS | 20574.0 |
| 171-0010 | 80521 | LF | 1.84 | TEMPORARY SILT FENCE, TYPE A | 148158.64 |
| 171-0030 | 144110 | LF | 2.95 | TEMPORARY SILT FENCE, TYPE C | 425124.5 |
| 643-8200 | 19020 | LF | 1.98 | BARRIER FENCE (ORANGE), 4 FT | 37659.6 |
| 700-8000 | 29 | TN | 403.11 | FERTILIZER MIXED GRADE | 11690.19 |
| | | | | **Section Sub Total:** | **$2,125,399.28** |

**Section Signing & Marking**

| Item Number | Quantity | Units | Unit Price | Item Description | Cost |
|---|---|---|---|---|---|
| 636-1020 | 88 | SF | 12.85 | HIGHWAY SIGNS, TP 1 MATL, REFL SHEETING, TP 3 | 1130.8 |
| 636-1033 | 1086 | SF | 18.39 | HIGHWAY SIGNS, TP 1 MATL, REFL SHEETING, TP 9 | 19971.54 |
| 636-1041 | 140 | SF | 30.09 | HIGHWAY SIGNS, TP 2 MATL, REFL SHEETING, TP 9 | 4212.6 |
| 636-2070 | 1169 | LF | 7.06 | GALV STEEL POSTS, TP 7 | 8253.14 |
| 636-2080 | 819 | LF | 8.91 | GALV STEEL POSTS, TP 8 | 7297.29 |
| 636-2090 | 191 | LF | 7.86 | GALV STEEL POSTS, TP 9 | 1501.26 |
| 636-3010 | 41 | EA | 529.21 | GROUND-MOUNTED BREAKAWAY SIGN SUPPORT | 21697.61 |
| 653-0120 | 97 | EA | 68.24 | THERMOPLASTIC PVMT MARKING, ARROW, TP 2 | 6619.28 |
| 653-0170 | 45 | EA | 93.98 | THERMOPLASTIC PVMT MARKING, ARROW, TP 7 | 4229.1 |
| 653-1501 | 122490 | LF | 0.33 | THERMOPLASTIC SOLID TRAF STRIPE, 5 IN, WHITE | 40421.70 |
| 653-1502 | 116600 | LF | 0.34 | THERMOPLASTIC SOLID TRAF STRIPE, 5 IN, YELLOW | 39644.0 |
| 653-1704 | 342 | LF | 3.51 | THERMOPLASTIC SOLID TRAF STRIPE, 24 IN, WHITE | 1200.41 |
| | | | | THERMOPLASTIC SKIP TRAF STRIPE, 5 IN, | |

| | | | | | |
|---|---|---|---|---|---|
| 653-3501 | 81922 | GLF | 0.23 | WHITE | 18842.06 |
| 653-6004 | 18643 | SY | 2.59 | THERMOPLASTIC TRAF STRIPING, WHITE | 48285.36 |
| 653-6006 | 2150 | SY | 2.67 | THERMOPLASTIC TRAF STRIPING, YELLOW | 5740.5 |
| 654-1003 | 560 | EA | 3.14 | RAISED PVMT MARKERS TP 3 | 1758.4 |
| 654-1010 | 56 | EA | 33.05 | RAISED PVMT MARKERS TP 10 | 1850.79 |
| 657-1085 | 2250 | LF | 5.5 | PREFORMED PLASTIC SOLID PVMT MKG, 8 IN, CONTRAST (BLACK-WHITE), TP PB | 12375.0 |
| 657-3085 | 2250 | GLF | 2.79 | PREFORMED PLASTIC SKIP PVMT MKG, 8 IN, CONTRAST (BLACK-WHITE), TP PB | 6277.5 |
| 657-6085 | 2250 | LF | 5.7 | PREFORMED PLASTIC SOLID PVMT MKG, 8 IN, CONTRAST (BLACK-YELLOW), TP PB | 12825.0 |
| | | | | **Section Sub Total:** | **$264,133.37** |

**Section Bridge No 1 RT - Buffalo Creek Overflow**

| Item Number | Quantity | Units | Unit Price | Item Description | Cost |
|---|---|---|---|---|---|
| 500-0100 | 480 | SY | 4.19 | GROOVED CONCRETE | 2011.20 |
| 500-1006 | 1 | LS | 226000.0 | SUPERSTR CONCRETE, CL AA, BR NO - 1 RT (228) | 226000.0 |
| 500-2100 | 230 | LF | 39.86 | CONCRETE BARRIER | 9167.8 |
| 500-3101 | 43 | CY | 238.02 | CLASS A CONCRETE | 10234.86 |
| 511-1000 | 5006 | LB | 0.89 | BAR REINF STEEL | 4455.34 |
| 511-3000 | 1 | LS | 80000.0 | SUPERSTR REINF STEEL, BR NO - 1 RT (68631) | 80000.0 |
| 520-2214 | 530 | LF | 43.54 | PILING, PSC, 14 IN SQ | 23076.2 |
| 520-2216 | 530 | LF | 44.74 | PILING, PSC, 16 IN SQ | 23712.2 |
| 520-4214 | 1 | EA | 0.86 | LOAD TEST, PSC, 14 IN SQ | 0.86 |
| 520-4216 | 1 | EA | 1.0 | LOAD TEST, PSC, 16 IN SQ | 1.0 |
| 540-1101 | 1 | LS | 86184.23 | REMOVAL OF EXISTING BR, STA NO - 169+70 | 86184.23 |
| 603-2024 | 600 | SY | 45.91 | STN DUMPED RIP RAP, TP 1, 24 IN | 27545.99 |
| 603-7000 | 600 | SY | 3.8 | PLASTIC FILTER FABRIC | 2280.0 |
| | | | | **Section Sub Total:** | **$494,669.69** |

**Section Bridge No. 1 LT - Buffalo Creek Overflow**

| Item Number | Quantity | Units | Unit Price | Item Description | Cost |
|---|---|---|---|---|---|
| 500-0100 | 480 | SY | 4.19 | GROOVED CONCRETE | 2011.20 |
| 500-1006 | 1 | LS | 226000.0 | SUPERSTR CONCRETE, CL AA, BR NO - 1 LT (228) | 226000.0 |
| 500-2100 | 230 | LF | 39.86 | CONCRETE BARRIER | 9167.8 |
| 500-3101 | 43 | CY | 238.02 | CLASS A CONCRETE | 10234.86 |
| 511-1000 | 5006 | LB | 0.89 | BAR REINF STEEL | 4455.34 |
| 511-3000 | 1 | LS | 80000.0 | SUPERSTR REINF STEEL, BR NO - 1 LT (68631) | 80000.0 |
| 520-2214 | 475 | LF | 43.54 | PILING, PSC, 14 IN SQ | 20681.5 |
| 520-2216 | 480 | LF | 44.74 | PILING, PSC, 16 IN SQ | 21475.2 |
| 520-3214 | 1 | EA | 4132.08 | TEST PILE, PSC, 14 IN SQ | 4132.08 |
| 520-3216 | 1 | EA | 3750.0 | TEST PILE, PSC, 16 IN SQ | 3750.0 |
| 520-4214 | 1 | EA | 0.86 | LOAD TEST, PSC, 14 IN SQ | 0.86 |
| 520-4216 | 1 | EA | 1.0 | LOAD TEST, PSC, 16 IN SQ | 1.0 |
| 603-2024 | 600 | SY | 45.91 | STN DUMPED RIP RAP, TP 1, 24 IN | 27545.99 |
| 603-7000 | 600 | SY | 3.8 | PLASTIC FILTER FABRIC | 2280.0 |
| | | | | **Section Sub Total:** | **$411,735.84** |

**Section Bridge No 2 RT - Buffalo Creek**

| Item Number | Quantity | Units | Unit Price | Item Description | Cost |
|---|---|---|---|---|---|
| 500-0100 | 2400 | SY | 4.19 | GROOVED CONCRETE | 10056.00 |
| 500-1006 | 1 | LS | 900095.0 | SUPERSTR CONCRETE, CL AA, BR NO - 2 RT (1114) | 900095.0 |
| 500-2100 | 1190 | LF | 39.86 | CONCRETE BARRIER | 47433.4 |
| 500-3101 | 160 | CY | 238.02 | CLASS A CONCRETE | 38083.20 |
| 511-1000 | 16898 | LB | 0.89 | BAR REINF STEEL | 15039.22 |
| 511-3000 | 1 | LS | 388387.0 | SUPERSTR REINF STEEL, BR NO - 2 RT (343705) | 388387.0 |
| 520-2214 | 525 | LF | 43.54 | PILING, PSC, 14 IN SQ | 22858.5 |
| 520-2216 | 3720 | LF | 44.74 | PILING, PSC, 16 IN SQ | 166432.80 |
| 520-4214 | 1 | EA | 0.86 | LOAD TEST, PSC, 14 IN SQ | 0.86 |

| | | | | | |
|---|---|---|---|---|---|
| 520-4216 | 1 | EA | 1.0 | LOAD TEST, PSC, 16 IN SQ | 1.0 |
| 540-1101 | 1 | LS | 86184.23 | REMOVAL OF EXISTING BR, STA NO - 176+66 | 86184.23 |
| 603-2024 | 800 | SY | 45.91 | STN DUMPED RIP RAP, TP 1, 24 IN | 36728.0 |
| 603-7000 | 800 | SY | 3.8 | PLASTIC FILTER FABRIC | 3040.0 |
| | | | | **Section Sub Total:** | **$1,714,339.21** |

**Section Bridge No. 2 LT - Buffalo Creek**

| Item Number | Quantity | Units | Unit Price | Item Description | Cost |
|---|---|---|---|---|---|
| 500-0100 | 2400 | SY | 4.19 | GROOVED CONCRETE | 10056.00 |
| 500-1006 | 1 | LS | 900095.0 | SUPERSTR CONCRETE, CL AA, BR NO - 2 LT (1114) | 900095.0 |
| 500-2100 | 1190 | LF | 39.86 | CONCRETE BARRIER | 47433.4 |
| 500-3101 | 160 | CY | 238.02 | CLASS A CONCRETE | 38083.20 |
| 511-1000 | 16898 | LB | 0.89 | BAR REINF STEEL | 15039.22 |
| 511-3000 | 1 | LS | 388387.0 | SUPERSTR REINF STEEL, BR NO - 2 LT (343705) | 388387.0 |
| 520-2214 | 460 | LF | 43.54 | PILING, PSC, 14 IN SQ | 20028.39 |
| 520-2216 | 3560 | LF | 44.74 | PILING, PSC, 16 IN SQ | 159274.4 |
| 520-3214 | 1 | EA | 4132.08 | TEST PILE, PSC, 14 IN SQ | 4132.08 |
| 520-3216 | 2 | EA | 3750.0 | TEST PILE, PSC, 16 IN SQ | 7500.0 |
| 520-4214 | 1 | EA | 0.86 | LOAD TEST, PSC, 14 IN SQ | 0.86 |
| 520-4216 | 1 | EA | 1.0 | LOAD TEST, PSC, 16 IN SQ | 1.0 |
| 603-2024 | 800 | SY | 45.91 | STN DUMPED RIP RAP, TP 1, 24 IN | 36728.0 |
| 603-7000 | 800 | SY | 3.8 | PLASTIC FILTER FABRIC | 3040.0 |
| | | | | **Section Sub Total:** | **$1,629,798.56** |

**Total Estimated Cost: $40,042,187.21**

Date 1/11/2010

P.I. Number **222285** County **WASHINGTON**

Project Number **HPPNF-0540-00(029)**

**Special Provision, Section 109-Measurement and Payment**

# FUEL PRICE ADJUSTMENT *(ENGLISH 125% MAX)*

| | |
|---|---|
| ENTER FPL DIESEL | 2.592 |
| ENTER FPM DIESEL | 5.832 |

| | |
|---|---|
| ENTER FPL UNLEADED | 2.592 |
| ENTER FPM UNLEADED | 5.832 |

http://www.dot.ga.gov/doingbusiness/Materials/Pages/asphaltcementindex.aspx

| INCREASE ADJUSTMENT |
|---|
| 125.00% |

| INCREASE ADJUSTMENT |
|---|
| 125.00% |

| ROADWAY ITEMS | QUANTITY | DIESEL FACTOR | GALLONS DIESEL | UNLEADED FACTOR | GALLONS UNLEADED | REMARKS |
|---|---|---|---|---|---|---|
| Excavations paid as specified by Sections 205 **(CUBIC YARD)** | 1884379.000 | 0.29 | 546469.91 | 0.15 | 282656.85 | |
| Excavations paid as specified by Sections 206 **(CUBIC YARD)** | | 0.29 | | 0.15 | | |
| GAB paid as specified by the ton under Section 310 **(TON)** | 262038.000 | 0.29 | 75991.02 | 0.24 | 62889.12 | |
| Hot Mix Asphalt paid as specified by the ton under Sections 400 **(TON)** | | 2.90 | | 0.71 | | |
| Hot Mix Asphalt paid as specified by the ton under Sections 402 **(TON)** | 157905.000 | 2.90 | 457924.50 | 0.71 | 112112.55 | |
| PCC Pavement paid as specified by the square yard under Section 430 **(SY)** | | 0.25 | | 0.20 | | |

| BRIDGE ITEMS | Quantity | Unit Price | QF/1000 | Diesel Factor | Gallons Diesel | Unleaded Factor | Gallons Unleaded | REMARKS |
|---|---|---|---|---|---|---|---|---|
| Bridge Excavation (CY) Section 211 | | | | 8.00 | | 1.50 | | |
| Class __Concrete (CY) Section 500 | 406.00 | 238.02 | 96.6361 | 8.00 | 773.09 | 1.50 | 144.95 | |
| Class __Concrete (CY) Section 500 | | | | 8.00 | | 1.50 | | |
| Class __Concrete (CY) Section 500 | | | | 8.00 | | 1.50 | | |
| Superstru Con Class__(CY) Section 500 | | | | 8.00 | | 1.50 | | |
| Superstru Con Class__(CY) Section 500 | | | | 8.00 | | 1.50 | | |
| Superstru Con Class__(CY) Section 500 | | | | 8.00 | | 1.50 | | |
| Concrete Handrail (LF) Section 500 | | | | 8.00 | | 1.50 | | |
| Concrete Barrier (LF) Section 500 | 2840.00 | 39.86 | 113.2024 | 8.00 | 905.62 | 1.50 | 169.80 | |

| BRIDGE ITEMS | Quantity | Unit Price | QF/1000 | Diesel Factor | Gallons Diesel | Unleaded Factor | Gallons Unleaded | REMARKS |
|---|---|---|---|---|---|---|---|---|
| Stru Steel Plan Quantity (LB) Section 501 | | | | 8.00 | | 1.50 | | |
| Stru Steel Plan Quantity (LB) Section 501 | | | | 8.00 | | 1.50 | | |
| | | | | | | | | |
| PSC Beams_____ (LF) Section 507 | | | | 8.00 | | 1.50 | | |
| PSC Beams_____ (LF) Section 507 | | | | 8.00 | | 1.50 | | |
| PSC Beams_____ (LF) Section 507 | | | | 8.00 | | 1.50 | | |
| | | | | | | | | |
| Stru Reinf Plan Quantity(LB) Section 511 | | | | 8.00 | | 1.50 | | |
| Stru Reinf Plan Quantity(LB) Section 511 | | | | 8.00 | | 1.50 | | |
| | | | | | | | | |
| Bar Reinf Steel (LB) Section 511 | 43808.00 | | | 8.00 | | 1.50 | | |
| | | | | | | | | |
| Piling___inch (LF) Section 520 | 1990.00 | 43.54 | 86.6446 | 8.00 | 693.16 | 1.50 | 129.97 | |
| Piling___inch (LF) Section 520 | 8290.00 | 44.74 | 370.8946 | 8.00 | 2967.16 | 1.50 | 556.34 | |
| Piling___inch (LF) Section 520 | | | | 8.00 | | 1.50 | | |
| Piling___inch (LF) Section 520 | | | | 8.00 | | 1.50 | | |
| Piling___inch (LF) Section 520 | | | | 8.00 | | 1.50 | | |
| Piling___inch (LF) Section 520 | | | | 8.00 | | 1.50 | | |
| | | | | | | | | |
| Drilled Caisson,___ (LF) Section 524 | | | | 8.00 | | 1.50 | | |
| Drilled Caisson,___ (LF) Section 524 | | | | 8.00 | | 1.50 | | |
| Drilled Caisson,___ (LF) Section 524 | | | | 8.00 | | 1.50 | | |
| | | | | | | | | |
| Pile Encasement,___(LF) Section 547 | | | | 8.00 | | 1.50 | | |
| Pile Encasement,___(LF) Section 547 | | | | 8.00 | | 1.50 | | |

| | | | |
|---|---|---|---|
| **SUM QF DIESEL=** | **1085724.45** | **SUM QF UNLEADED=** | **458659.59** |

| | |
|---|---|
| **DIESEL PRICE ADJUSTMENT($)** | **$3,236,327.45** |
| **UNLEADED PRICE ADJUSTMENT($)** | **$1,367,172.50** |

# ASPHALT CEMENT PRICE ADJUSTMENT
## (BITUMINOUS TACK COAT 125% MAX)

*APPLICABLE TO CONTRACTS/PROJECTS CONTAINING THE 413 SPECIFICATION, SECTION 413.5.01 ADJUSTMENTS*
*ASPHALT PRICE ADJUSTMENT FOR BITUMINOUS TACK COAT*

http://www.dot.ga.gov/doingbusiness/Materials/Pages/asphaltcementindex.aspx

**ENTER APL** 397 **ENTER APM** 893.25

| 125.00% | INCREASE ADJUSTMENT |
|---|---|

| L.I.N. | TYPE | TACK (GALLONS) | TACK (TONS) | REMARKS |
|---|---|---|---|---|
| 413-1000 | PG 58-22 | 38473 | 165.2454 | |

**TMT =** 165.2454

| PRICE ADJUSTMENT($) | $78,722.90 |
|---|---|

# 400 / 402 ASPHALT CEMENT PRICE ADJUSTMENT 125% MAX

**ENTER APL** 397 **ENTER APM** 893.25

http://www.dot.ga.gov/doingbusiness/Materials/Pages/asphaltcementindex.aspx

| 125.00% | INCREASE ADJUSTMENT |
|---|---|

| L.I.N. / Spec Number | MIX TYPE | HMA | JMF AC% | AC | REMARKS |
|---|---|---|---|---|---|
| 402-3113 | 12.5 mm SP | 36139 | 5.00 | 1806.95 | |
| 402-3121 | 25 mm SP | 72936 | 5.00 | 3646.80 | |
| 402-3190 | 19 mm SP | 48830 | 5.00 | 2441.50 | |
| | | | 5.00 | | |
| | | | 5.00 | | |
| | | | 5.00 | | |
| | | | 5.00 | | |
| | | | 5.00 | | |
| | | | 5.00 | | |
| | | | 5.00 | | |
| | | | 5.00 | | |
| | | | 5.00 | | |
| | | | 5.00 | | |
| | | | 5.00 | | |
| | | | 5.00 | | |
| | | | | **TMT =** | 7895.25 |

| PRICE ADJUSTMENT($) | $3,761,297.10 |
|---|---|

# ASPHALT CEMENT PRICE ADJUSTMENT FOR BITUMINOUS TACK COAT(Surface Treatment 125% MAX)

*APPLICABLE TO CONTRACTS CONTAINING THE 413 SPEC. SECTION 413.5.01 ADJUSTMENTS ASPHALT PRICE ADJUSTMENT FOR BITUMINOUS TACK COAT*

http://www.dot.ga.gov/doingbusiness/Materials/Pages/asphaltcementindex.aspx

ENTER APL 397 ENTER APM 893.25

| 125.00% | INCREASE ADJUSTMENT |
|---|---|

**Use this side for Asphalt Emulsion Only**

| L.I.N. | TYPE | ASPHALT EMULSION (GALLONS) |
|---|---|---|
| | | |

TMT =

REMARKS:

**Use this side for Asphalt Cement Only**

| L.I.N. | TYPE | TACK (GALLONS) |
|---|---|---|
| 413-1000 | PG 58-22 | 38473 |

TMT = 165.2454

REMARKS:

| MONTHLY PRICE ADJUSTMENT($) | $78,722.90 |
|---|---|

## ADJUSTMENT SUMMARY

FUEL PRICE ADJUSTMENT *(ENGLISH 125% MAX)*

| | |
|---|---|
| DIESEL PRICE ADJUSTMENT($) | $3,236,327.45 |
| UNLEADED PRICE ADJUSTMENT($) | $1,367,172.50 |
| ASPHALT CEMENT PRICE ADJUSTMENT (BITUMINOUS TACK COAT 125% MAX) | $78,722.90 |
| 400 / 402 ASPHALT CEMENT PRICE ADJUSTMENT 125% MAX | $3,761,297.10 |
| ASPHALT CEMENT PRICE ADJUSTMENT FOR BITUMINOUS TACK COAT(Surface Treatment 125% MAX) | $78,722.90 |

REMARKS:

| TOTAL ADJUSTMENTS | $8,522,242.84 |
|---|---|

DWM 10/08

# DEPARTMENT OF TRANSPORTATION
# STATE OF GEORGIA

## INTERDEPARTMENT CORRESPONDENCE

FILE HPPNF-0540-00(029) – Washington County
P.I. No. 222285

OFFICE Tennille - Utilities

DATE October 2, 2009

FROM Jack (Gus) D. Cooper, Jr.
District Utilities Engineer

TO Brent Story, State Road Design Engineer
ATTN Brad Ehrman

SUBJECT PRELIMINARY UTILITY COST ESTIMATE

As requested by your office, we are furnishing you with a Preliminary Utility Cost estimates for each utility with facilities potentially located within the project limits.

| FACILITY OWNER | NON-REIMBURSABLE | REIMBURSABLE |
|---|---|---|
| WASHINGTON EMC | $173,772.74 | $551,395.96 |
| Total | $173,772.74 | $551,395.96 |
| 30% Contingency | | $165,418.78 |
| Total Reimbursement Cost | | $716,814.74 |

Total non-reimbursable cost for the above project is $173,772.74. The reimbursable cost for the above project is $716,814.74.

If you have any questions, please contact Renae Lawrence at 478-552-4606.

JDC/RL

cc: Jeff Baker, State Utilities Engineer
Jamie Simpson, Office of Financial Management
Chris Holmes, Area Engineer

| STATE | PROJECT NUMBER | SHEET NO. | TOTAL SHEETS |
|---|---|---|---|
| GA | HPPNF-0540-00(029) | 1 | |

# DEPARTMENT OF TRANSPORTATION
# STATE OF GEORGIA

## PLAN AND PROFILE OF PROPOSED RECONSTRUCTION OF SR 24
## WASHINGTON COUNTY
## HPPNF-0540-00(029)

STATE ROUTE 24
FEDERAL ROUTE F44-1
P. I. NO. 222285

NOTE :
ALL REFERENCES IN THIS DOCUMENT, WHICH INCLUDES ALL PAPERS, WRITINGS, DOCUMENTS, DRAWINGS, OR PHOTOGRAPHS USED, OR TO BE USED IN CONNECTION WITH THIS DOCUMENT, TO " STATE HIGHWAY DEPARTMENT OF GEORGIA ", "STATE HIGHWAY DEPARTMENT ", GEORGIA STATE HIGHWAY DEPARTMENT ", " HIGHWAY DEPARTMENT ", OR " DEPARTMENT " WHEN THE CONTEXT THEREOF MEANS THE STATE HIGHWAY DEPARTMENT OF GEORGIA MEAN, AND SHALL BE DEEMED TO MEAN THE DEPARTMENT OF TRANSPORTATION.

SITE LOCATION

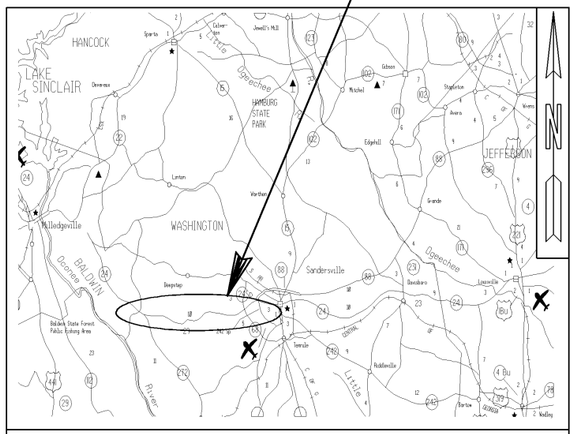


LOCATION SKETCH

BEGIN PROJECT HPPNF-0540-00(29)
STA. 598+00
M.P. 31.24
N 1082309.85
E 395894.76

MIDPOINT: STA. 222+99.00
M.P. 30.60
N 1080986.07
E 417342.80

END PROJECT HPPNF-0540-00(29)
STA. 432+70.00
M.P. 22.73
N 1082074.55
E 437493.89

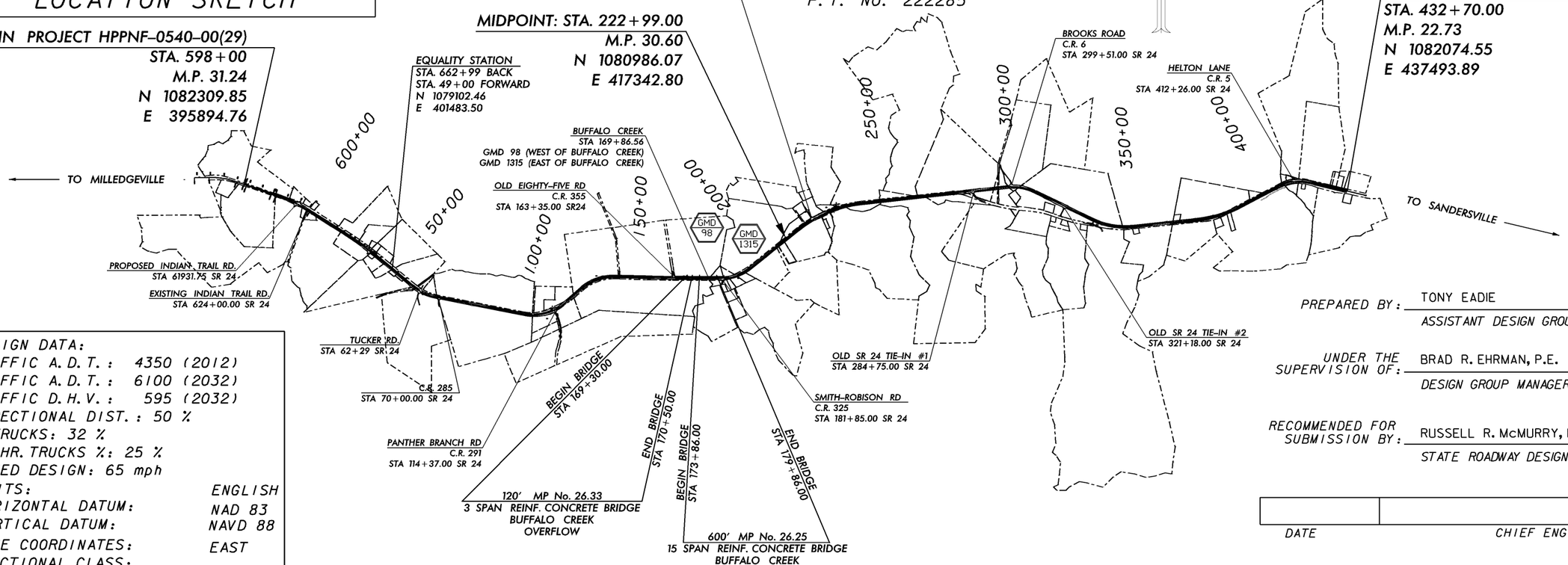


DESIGN DATA:
TRAFFIC A.D.T. : 4350 (2012)
TRAFFIC A.D.T. : 6100 (2032)
TRAFFIC D.H.V. : 595 (2032)
DIRECTIONAL DIST. : 50 %
% TRUCKS: 32 %
24 HR. TRUCKS %: 25 %
SPEED DESIGN: 65 mph
UNITS: ENGLISH
HORIZONTAL DATUM: NAD 83
VERTICAL DATUM: NAVD 88
ZONE COORDINATES: EAST
FUNCTIONAL CLASS:
RURAL PRINCIPAL ARTERIAL
PROJECT DESIGNATION: EXEMPT

THE DATA, TOGETHER WITH ALL OTHER INFORMATION SHOWN ON THESE PLANS OR IN ANYWAY INDICATED THEREBY, WHETHER BY DRAWINGS OR NOTES, OR IN ANY OTHER MANNER, ARE BASED UPON FIELD INVESTIGATIONS AND ARE BELIEVED TO BE INDICATIVE OF ACTUAL CONDITIONS. HOWEVER, THE SAME ARE SHOWN AS INFORMATION ONLY, ARE NOT GUARANTEED, AND DO NOT BIND THE DEPARTMENT OF TRANSPORTATION IN ANY WAY. THE ATTENTION OF THE BIDDER IS SPECIFICALLY DIRECTED TO SUBSECTION 102.04, 102.05, AND 104.03 OF THE SPECIFICATIONS.

SCALE IN FEET
0 2000 4000 8000

100% OF THIS PROJECT IS LOCATED IN CONGRESSIONAL DISTRICT NO. 12.
100% OF THIS PROJECT IS LOCATED IN WASHINGTON COUNTY.

WASHINGTON COUNTY, COUNTY CODE 303
HPPNF-0540-00(029), P.I. NO. 222285

| LENGTH OF PROJECT | MILES |
|---|---|
| NET LENGTH OF ROADWAY | 8.361 |
| NET LENGTH OF BRIDGES | 0.136 |
| NET LENGTH OF PROJECT | 8.497 |
| NET LENGTH OF EXCEPTIONS | 0.000 |
| GROSS LENGTH OF PROJECT | 8.497 |

PREPARED BY: TONY EADIE
ASSISTANT DESIGN GROUP MANAGER

UNDER THE SUPERVISION OF: BRAD R. EHRMAN, P.E.
DESIGN GROUP MANAGER

RECOMMENDED FOR SUBMISSION BY: RUSSELL R. McMURRY, P.E.
STATE ROADWAY DESIGN ENGINEER

DATE CHIEF ENGINEER

L & D APPROVAL DATE: JUNE 16, 2004

| PLANS COMPLETED - - | |
|---|---|
| REVISIONS | |

Wed Jan 13 11:08:43 2010
Wed Jan 13 11:08:43 2010

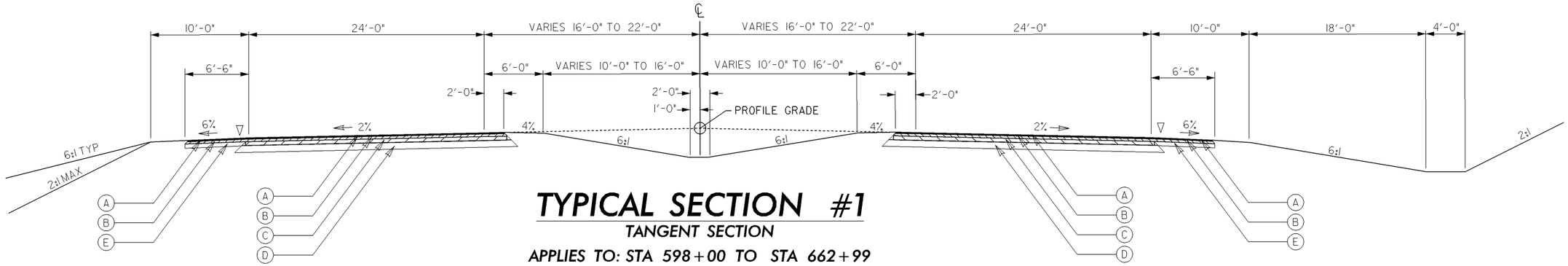


# TYPICAL SECTION #1

**TANGENT SECTION**

**APPLIES TO: STA 598+00 TO STA 662+99**

**STA 49+00 TO 431+00**

## SLOPE CONTROLS

| FOR STA. 598+03 TO 662+99 | | |
|---|---|---|
| SLOPE | CUT | FILL |
| 2:1 | ALL | ALL |

| FOR STA. 49+00 TO 431+00 | | |
|---|---|---|
| SLOPE | CUT | FILL |
| 2:1 | 0–15′ | 0–20′ |
| 3:1 | 15–35′ | 20–35′ |
| 3:1 (WITH BENCH) | >35′ | >35′ |

*EXCEPT WHERE NOTED ON THE CROSS SECTIONS*

REQUIRED PAVEMENT:

(A) RECYCLED ASPH CONC 12.5mm SUPERPAVE, GP 2 ONLY, INCL BITUM MATL & H LIME (165#/SY)
(B) RECYCLED ASPH CONC 19mm SUPERPAVE, GP 1 OR 2, INCL BITUM MATL & H LIME (220#/SY)
(C) RECYCLED ASPH CONC 25mm SUPERPAVE, GP 1 OR 2, INCL BITUM MATL & H LIME (440#/SY)
(D) GRADED AGGREGATE BASE, 12"
(E) GRADED AGGREGATE BASE, 6"

▽ 16" MILLED RUMBLE STRIP

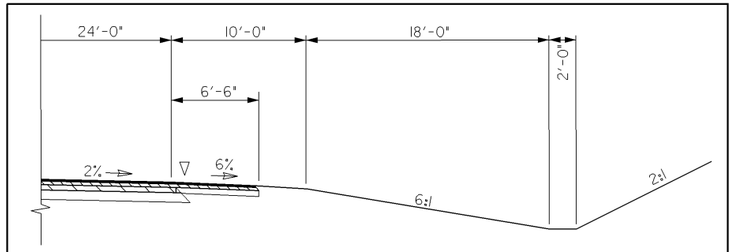


**APPLIES TO: STA 622+00 TO STA 623+00**

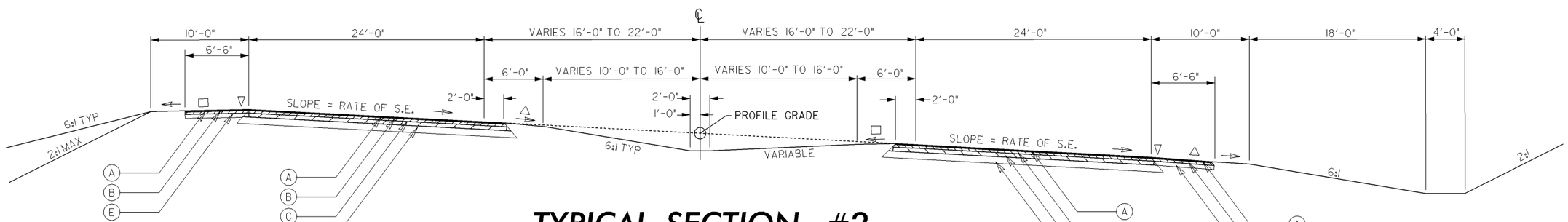


△ = SHOULDER TO SLOPE AT 6%, HOWEVER, THE ALGEBRAIC DIFFERENCE IN PAVING SLOPE AND SHOULDER SLOPE SHALL NOT EXCEED 8%.

□ = SHOULDER TO SLOPE TO MAINTAIN A MAXIMUM BREAKOVER OF 8%.

# TYPICAL SECTION #2

**SUPERELEVATED SECTION**

**SEE PLANS FOR LOCATIONS**

**GEORGIA**
**DEPARTMENT OF TRANSPORTATION**

REVISION DATES

STATE OF GEORGIA
DEPARTMENT OF TRANSPORTATION
OFFICE: ROAD DESIGN

**TYPICAL SECTIONS**

HPPNF-0540-00(029)
WASHINGTON COUNTY

DRAWING No.
5-01

9/15/2007 GPLN

| STATE | PROJECT NUMBER | SHEET NO. | TOTAL SHEETS |
|---|---|---|---|
| GA | HPPNF-0540-00(029) | | |

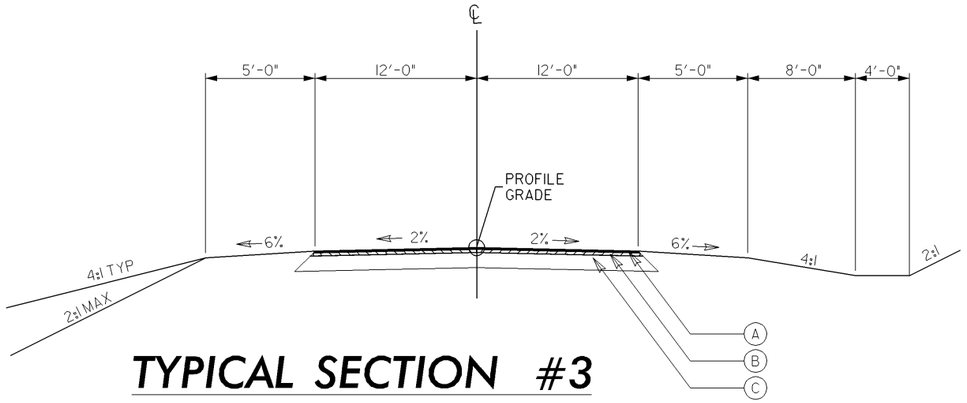


# TYPICAL SECTION #3

**SIDEROAD TANGENT SECTION**

**APPLIES TO:**

| | |
|---|---|
| TUCKER ROAD | OLD S.R. 24 TIE-IN #1 |
| C.R. 285 | BROOKS ROAD |
| PANTHER BRANCH ROAD | OLD S.R. 24 TIE-IN #2 |
| OLD EIGHTY-FIVE ROAD | ROUGHTON DRIVEWAY |
| SMITH-ROBISON ROAD. | HELTON LANE |
| CHAMBER BROOKS SPRING RD. | CUL-DE-SAC |

REQUIRED PAVEMENT:

(A) RECYCLED ASPH CONC 12.5mm SUPERPAVE, GP 2 ONLY, INCL BITUM MATL & H LIME (165#/SY)

(B) RECYCLED ASPH CONC 19mm SUPERPAVE, GP 1 OR 2, INCL BITUM MATL & H LIME (220#/SY)

(C) GRADED AGGREGATE BASE, 10"

## SLOPE CONTROLS

| SLOPE | CUT | FILL |
|---|---|---|
| 2:1 | 0–15′ | 0–20′ |
| 3:1 | 15–35′ | 20–35′ |
| 3:1 (WITH BENCH) | >35′ | >35′ |

*EXCEPT WHERE NOTED ON THE CROSS SECTIONS*

△ = SHOULDER TO SLOPE AT 6%. HOWEVER, THE ALGEBRAIC DIFFERENCE IN PAVING SLOPE AND SHOULDER SLOPE SHALL NOT EXCEED 8%.

□ = SHOULDER TO SLOPE TO MAINTAIN A MAXIMUM BREAKOVER OF 8%.

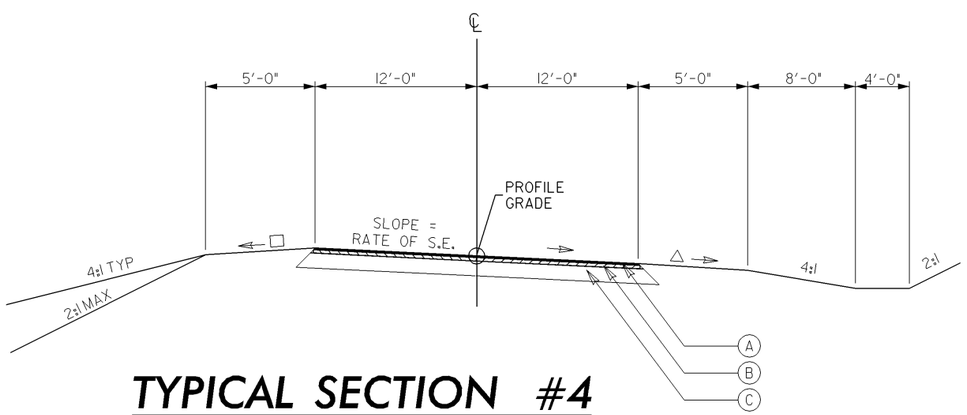


# TYPICAL SECTION #4

**SIDEROAD SUPERELEVATED SECTION**

**SEE PLANS FOR LOCATION**

## ALLOWABLE RANGES TABLE

*FOR THIS PROJECT. CROSS SLOPES THAT ARE ADJUSTED TO "BEST FIT" EXISTING PAVEMENT SLOPES ARE SUBJECT TO THE FOLLOWING LIMITS:*

A. NORMAL CROWN

| SECTION WITH GRADES 0.5% OR GREATER | SECTION WITH GRADES LESS THAN 0.5% |
|---|---|
| 0.0150 FT/FT - MINIMUM | 0.0156 FT/FT - MINIMUM |
| 0.0208 FT/FT - DESIRABLE | 0.0208 FT/FT - DESIRABLE |
| 0.0250 FT/FT - MAXIMUM | 0.0300 FT/FT - MAXIMUM |

B. SUPERELEVATION RATE

S.E. RATE SHOWN ON PLANS OR SE RATE EXISTING IN FIELD. WHICHEVER IS GREATER.

C. SUPERELEVATION TRANSITION LENGTH (LENGTH FROM FLAT POINT TO FULL SE)

| | RATE OF CHANGE | CORRESPONDING DIFFERENCE IN GRADE BETWEEN PIVOT POINT AND EDGE OF PAVEMENT |
|---|---|---|
| MINIMUM | 1:150 | 0.67% |
| DESIRABLE | 1:200 | 0.50% |
| MAXIMUM | 1:300 | 0.33% |

LENGTH SHALL BE SET TO AVOID CREATING A FLAT GUTTER GRADE ON LOW SIDE AND TO AVOID FLAT CROSS SLOPES AT OR NEAR THE LOW POINT OF VERTICAL CURVES.

D. POSITIONING OF SUPERELEVATION TRANSITION LENGTH ON SIMPLE CURVES

50% OF TRANSITION INSIDE CURVE - MAXIMUM
33% OF TRANSITION INSIDE CURVE - DESIRABLE
20% OF TRANSITION INSIDE CURVE - MINIMUM

NOTE: CROWN WIPE-OUT SHALL BE AT THE SAME RATE AS THE SE TRANSITION.

E. SMOOTHING OF BREAKS IN EDGE PROFILE AT BEGIN AND END OF TRANSITION SHALL BE ACCOMPLISHED BY VERTICAL CURVE WITH A MINIMUM LENGTH (IN FEET) EQUAL TO THE SPEED DESIGN (IN MPH).

**GEORGIA**
**DEPARTMENT OF TRANSPORTATION**

REVISION DATES

STATE OF GEORGIA
DEPARTMENT OF TRANSPORTATION
OFFICE: ROAD DESIGN
TYPICAL SECTIONS
HPPNF-0540-00(029)
WASHINGTON COUNTY

DRAWING NO. 5-02

| STATE | PROJECT NUMBER | SHEET NO. | TOTAL SHEETS |
|---|---|---|---|
| GA | HPPNF-0540-00(029) | | |

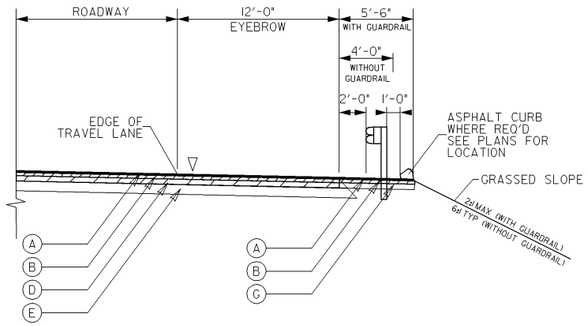


## TYPICAL SHOULDER DETAIL FOR U-TURN EYEBROW

SEE PLANS FOR LOCATION

SEE CONSTRUCTION DETAIL M-3

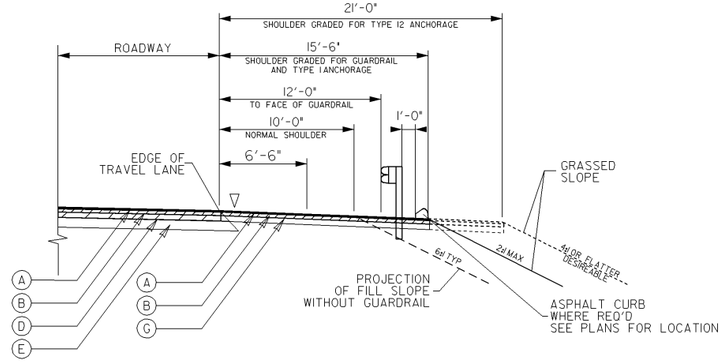


## TYPICAL SHOULDER DETAIL FOR GUARDRAIL

FOR MAINLINE WITH ASPHALT SHOULDER

SEE PLANS FOR LOCATIONS

SEE CONSTRUCTION DETAIL S-4

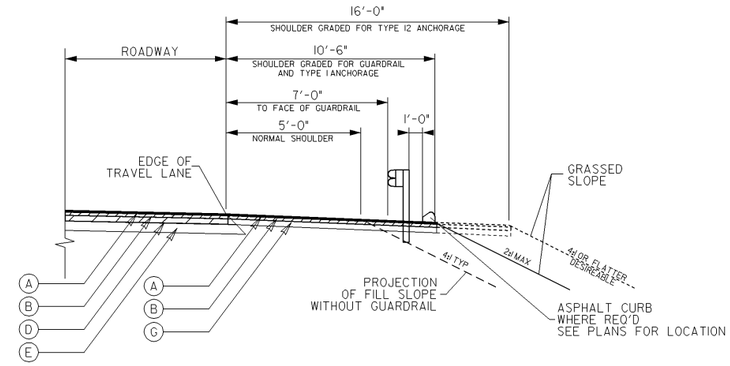


## TYPICAL SHOULDER DETAIL FOR GUARDRAIL

FOR SIDE ROADS

SEE PLANS FOR LOCATIONS

SEE CONSTRUCTION DETAIL S-4

REQUIRED PAVEMENT:

(A) RECYCLED ASPH CONC 12.5mm SUPERPAVE, GP 2 ONLY, INCL BITUM MATL & H LIME (165#/SY)

(B) RECYCLED ASPH CONC 19mm SUPERPAVE, GP 1 OR 2, INCL BITUM MATL & H LIME (220#/SY)

(C) RECYCLED ASPH CONC 19mm SUPERPAVE, GP 1 OR 2, INCL BITUM MATL & H LIME (330#/SY)

(D) RECYCLED ASPH CONC 25mm SUPERPAVE, GP 1 OR 2, INCL BITUM MATL & H LIME (440#/SY)

(E) GRADED AGGREGATE BASE, 12"

(F) GRADED AGGREGATE BASE, 8"

(G) GRADED AGGREGATE BASE, 6"

▽ 16" MILLED RUMBLE STRIP

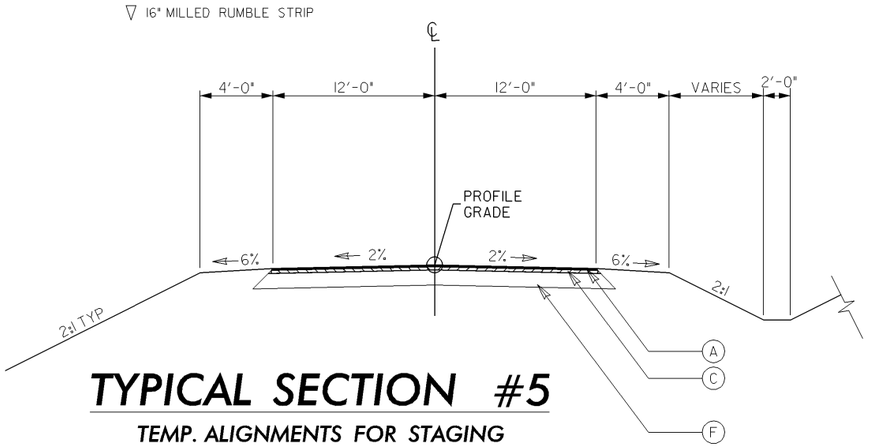


## TYPICAL SECTION #5

TEMP. ALIGNMENTS FOR STAGING

APPLIES TO:

MAINLINE & PANTHER BRANCH RD.

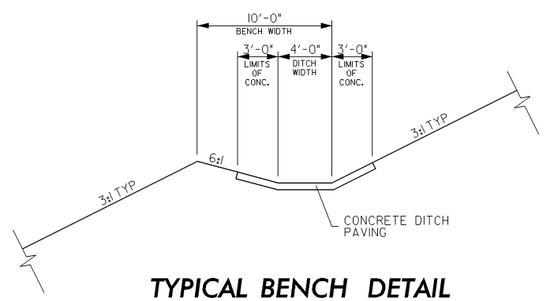


## TYPICAL BENCH DETAIL

FOR BENCHED CUT AND FILL SLOPES

SEE PLANS FOR LOCATIONS

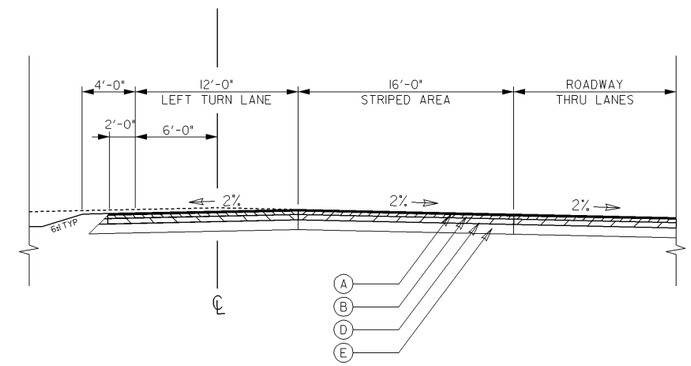


## LEFT TURN LANE DETAIL

FOR TANGENT SECTIONS

SEE PLANS FOR SUPERELEVATED LOCATIONS

**GEORGIA**
**DEPARTMENT OF TRANSPORTATION**

| REVISION DATES | | |
|---|---|---|
| | | |

STATE OF GEORGIA
DEPARTMENT OF TRANSPORTATION

OFFICE: ROAD DESIGN

TYPICAL SECTIONS

HPPNF-0540-00(029)
WASHINGTON COUNTY

DRAWING No. 5-03

9/15/2007 GPLN

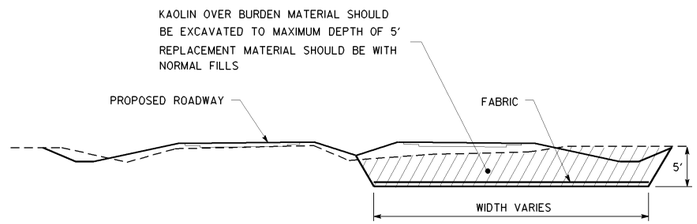


NOTES:

1. KAOLIN OVERBURDEN MATERIAL SHOULD BE EXCAVATED TO A MAXIMUM DEPTH OF 5 FEET.
2. REPLACEMENT MATERIAL SHOULD BE WITH NORMAL FILLS.
3. FABRIC SHOULD BE PLACED IN ACCORDANCE WITH SPECIAL PROVISION SECTION 881.

| APPLIES TO STATION TO STATION | LOCATION | MAX. DEPTH |
|---|---|---|
| 68+50 ± TO 114+00 ± | RIGHT OF ℄ | 5' ± |

## KAOLIN REMOVAL AND FABRIC PLACEMENT DETAIL

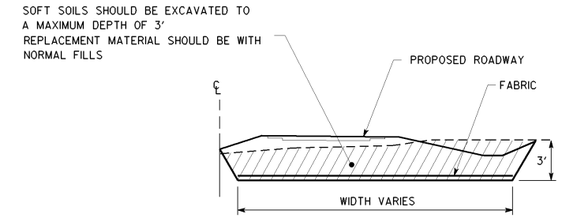


NOTES:

1. SOFT SOILS SHOULD BE EXCAVATED TO A MAXIMUM DEPTH OF 3 FEET.
2. REPLACEMENT MATERIAL SHOULD BE WITH NORMAL FILLS.
3. FABRIC SHOULD BE PLACED IN ACCORDANCE WITH SPECIAL PROVISION SECTION 881.

| APPLIES TO STATION TO STATION | LOCATION | MAX. DEPTH |
|---|---|---|
| 15+50 ± TO 16+50 ± | RIGHT OF ℄ | 3' ± |
| 124+00 ± TO 127+00 ± | LEFT OF ℄ | 3' ± |
| 170+50 ± TO 172+00 ± | LEFT OF ℄ | 3' ± |
| 281+50 ± TO 283+50 ± | ℄ | 3' ± |

## SOFT SOIL REMOVAL AND FABRIC PLACEMENT DETAIL

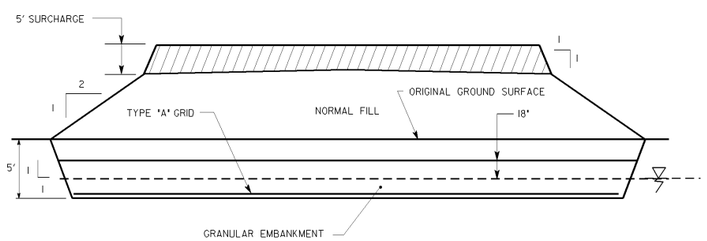


NOTES:

1. SOFT SOILS SHOULD BE EXCAVATED TO A MAXIMUM DEPTH OF 5 FEET.
2. IF INUNDATED, GRANULAR EMBANKMENT SHOULD BE PLACED TO HEIGHT OF 18 INCHES ABOVE WATER LEVEL AT THE TIME OF CONSTRUCTION AND FOLLOWED BY NORMAL FILLS.
3. TYPE A GEOGRID SHOULD BE PLACED IN ACCORDANCE WITH SPECIAL PROVISION 457 & 809.
4. 5 FEET SURCHARGE TO BE PLACED ON TOP OF COMPLETE FILL & OBSERVED FOR A PERIOD 45 DAYS PRIOR TO DRIVING OF END BENT PILES.

| APPLIES TO STATION TO STATION | LOCATION |
|---|---|
| 168+80 ± TO 169+50 ± | LEFT BRIDGE |
| 170+30 ± TO 171+00 ± | LEFT BRIDGE |
| 173+36 ± TO 174+05 ± | LEFT BRIDGE |
| 179+69 ± TO 180+36 ± | LEFT BRIDGE |

## REMOVAL AND SURCHARGE DETAIL

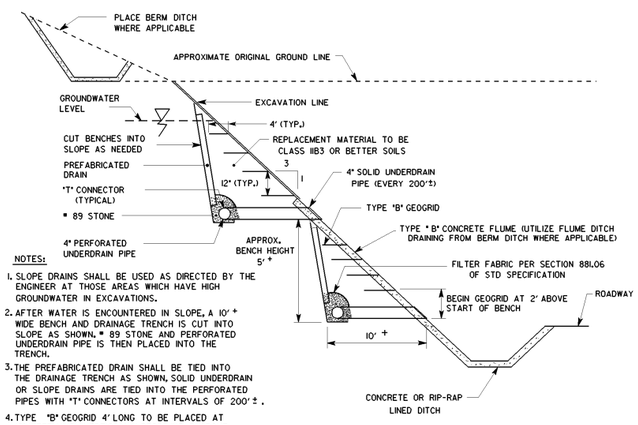


NOTES:

1. SLOPE DRAINS SHALL BE USED AS DIRECTED BY THE ENGINEER AT THOSE AREAS WHICH HAVE HIGH GROUNDWATER IN EXCAVATIONS.
2. AFTER WATER IS ENCOUNTERED IN SLOPE, A 10' + WIDE BENCH AND DRAINAGE TRENCH IS CUT INTO SLOPE AS SHOWN. # 89 STONE AND PERFORATED UNDERDRAIN PIPE IS THEN PLACED INTO THE TRENCH.
3. THE PREFABRICATED DRAIN SHALL BE TIED INTO THE DRAINAGE TRENCH AS SHOWN, SOLID UNDERDRAIN OR SLOPE DRAINS ARE TIED INTO THE PERFORATED PIPES WITH "T" CONNECTORS AT INTERVALS OF 200' ± .
4. TYPE "B" GEOGRID 4' LONG TO BE PLACED AT 12" INTERVALS (VERTICALLY) BEGINNING 2' ABOVE THE BOTTOM OF THE BENCH.
5. THE PREFABRICATED DRAIN SHALL BE AS PER GA. QUALIFIED PRODUCTS LIST NO. 47
6. ADDITIONAL BENCHES MAY BE REQUIRED TO PROVIDE CONTINUOS COVERAGE FROM GROUNDWATER LEVEL TO BOTTOM OF SLOPE. THE LENGTH OF EACH BENCH EXCAVATION WILL BE MEASURED SEPARATELY FOR PAYMENT.
7. REPLACEMENT MATERIAL TO BE CLASS IIB3 OR BETTER SOILS.

## DRAINAGE DETAIL FOR HIGH GROUNDWATER IN A CUT

**GEORGIA**
**DEPARTMENT OF TRANSPORTATION**

REVISION DATES

STATE OF GEORGIA
DEPARTMENT OF TRANSPORTATION
OFFICE: ROAD DESIGN
TYPICAL SECTIONS
HPPNF-0540-00(029)
WASHINGTON COUNTY
DRAWING No. 5-04

SHEET 1 OF 4

GEORGIA DEPARTMENT OF TRANSPORTATION
OFFICE OF ENVIRONMENT/LOCATION

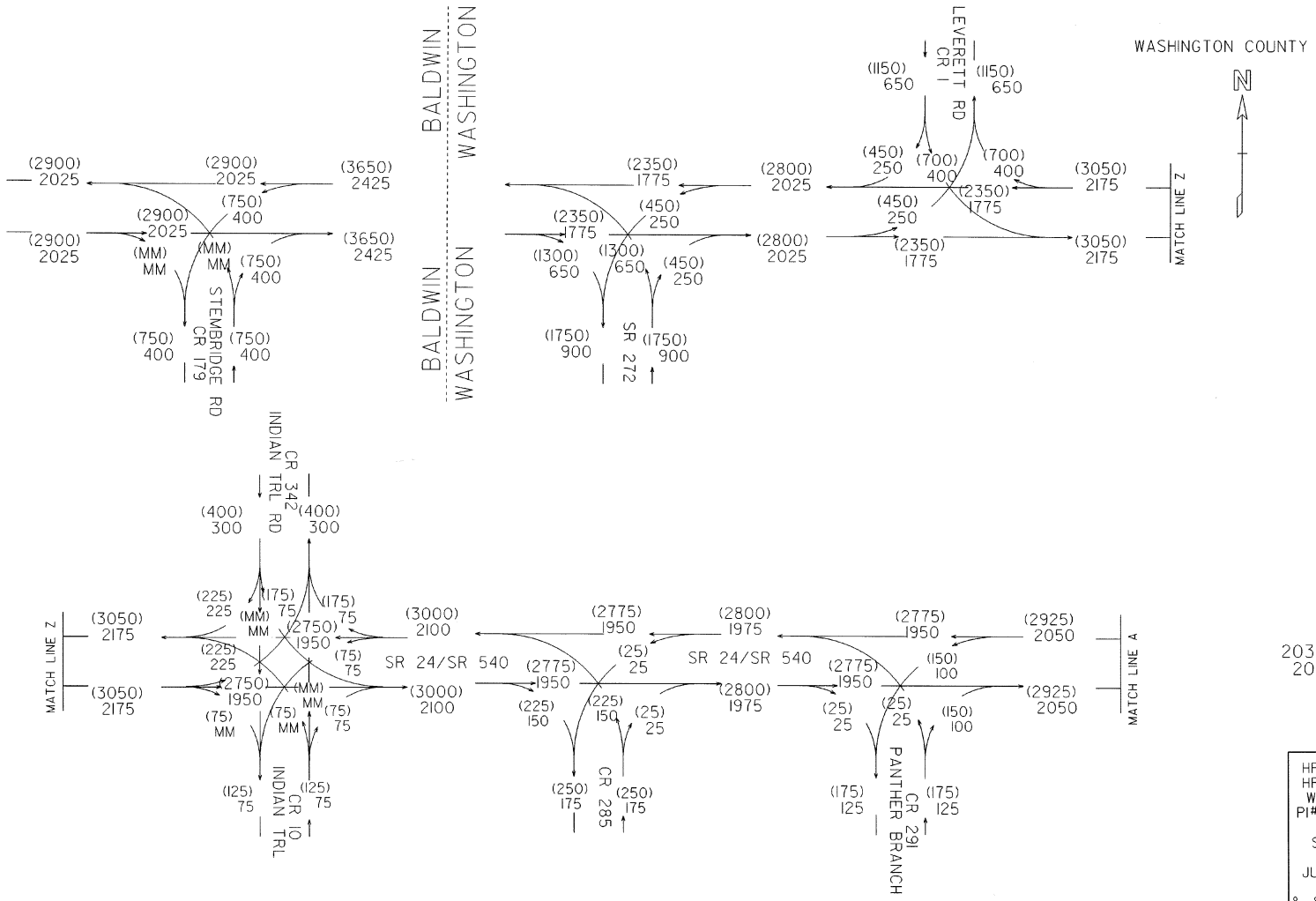


2032 ADT = (000)
2012 ADT = 000

24 HRT = 25%
S.U. = 10.5%
COMB. = 14.5%

HPPNF-0540-00(029)
HPPNF-0540-00(029)
WASHINGTON COUNTY
PI# 222280 & 222285

SR 24/SR 540 FM
CR 10/CR 342 TO
JUST WEST OF SR 68

& SR 24/SR 540 FM S
OF CR 186 TO CR 10
IN WASHINGTON CO

10-01

RFK
10/09

SHEET 2 OF 4

GEORGIA DEPARTMENT OF TRANSPORTATION
OFFICE OF ENVIRONMENT/LOCATION

WASHINGTON COUNTY

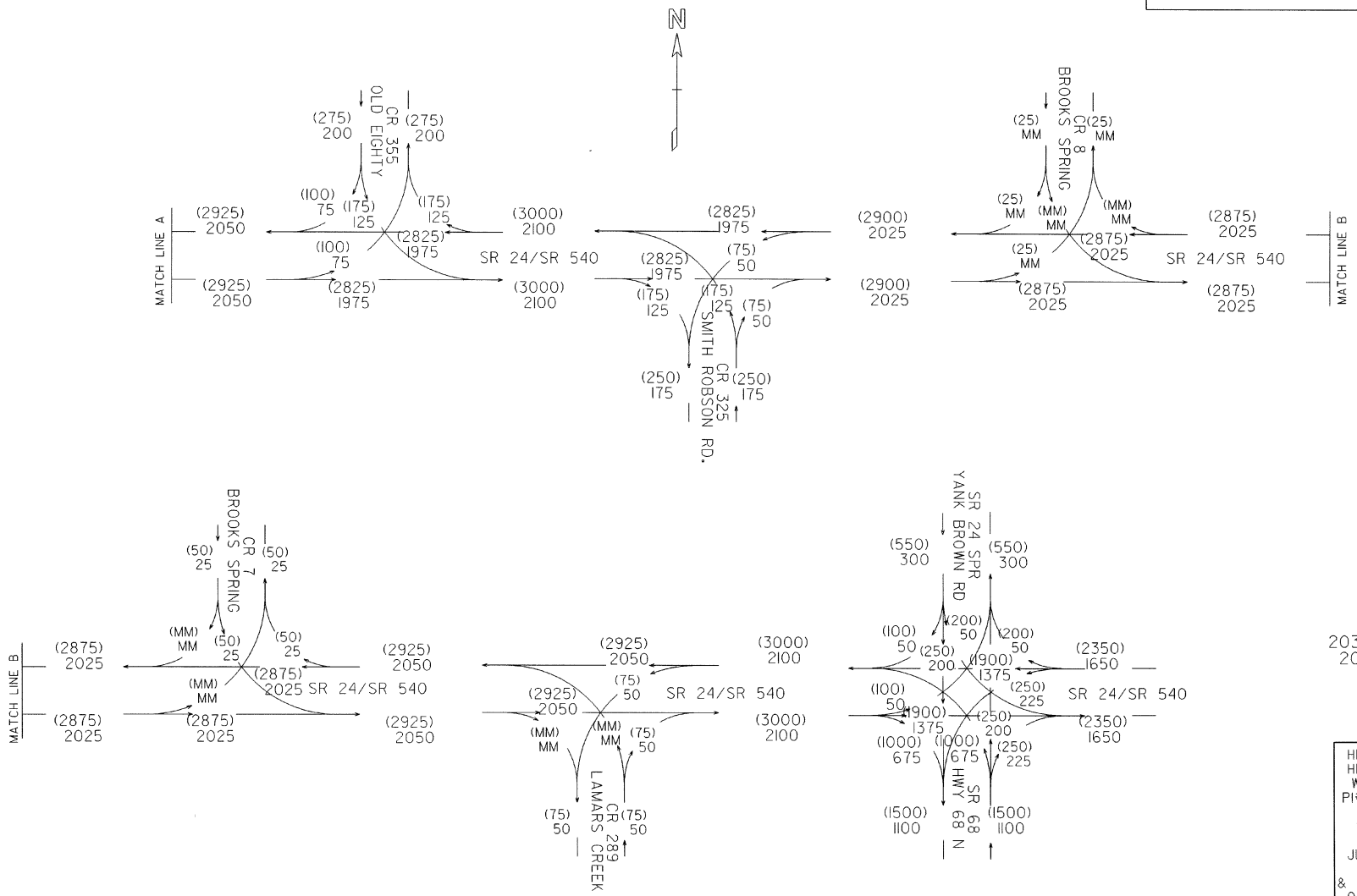


2032 ADT = (000)
2012 ADT = 000

24 HRT = 25%
S.U. = 10.5%
COMB. = 14.5%

HPPNF-0540-00(029)
HPPNF-0540-00(029)
WASHINGTON COUNTY
PI# 222280 & 222285

SR 24/SR 540 FM
CR 10/CR 342 TO
JUST WEST OF SR 68

& SR 24/SR 540 FM S
OF CR 186 TO CR 10
IN WASHINGTON CO

10-02

REV 10/09

SHEET 3 OF 4

GEORGIA DEPARTMENT OF TRANSPORTATION
OFFICE OF ENVIRONMENT/LOCATION

WASHINGTON COUNTY

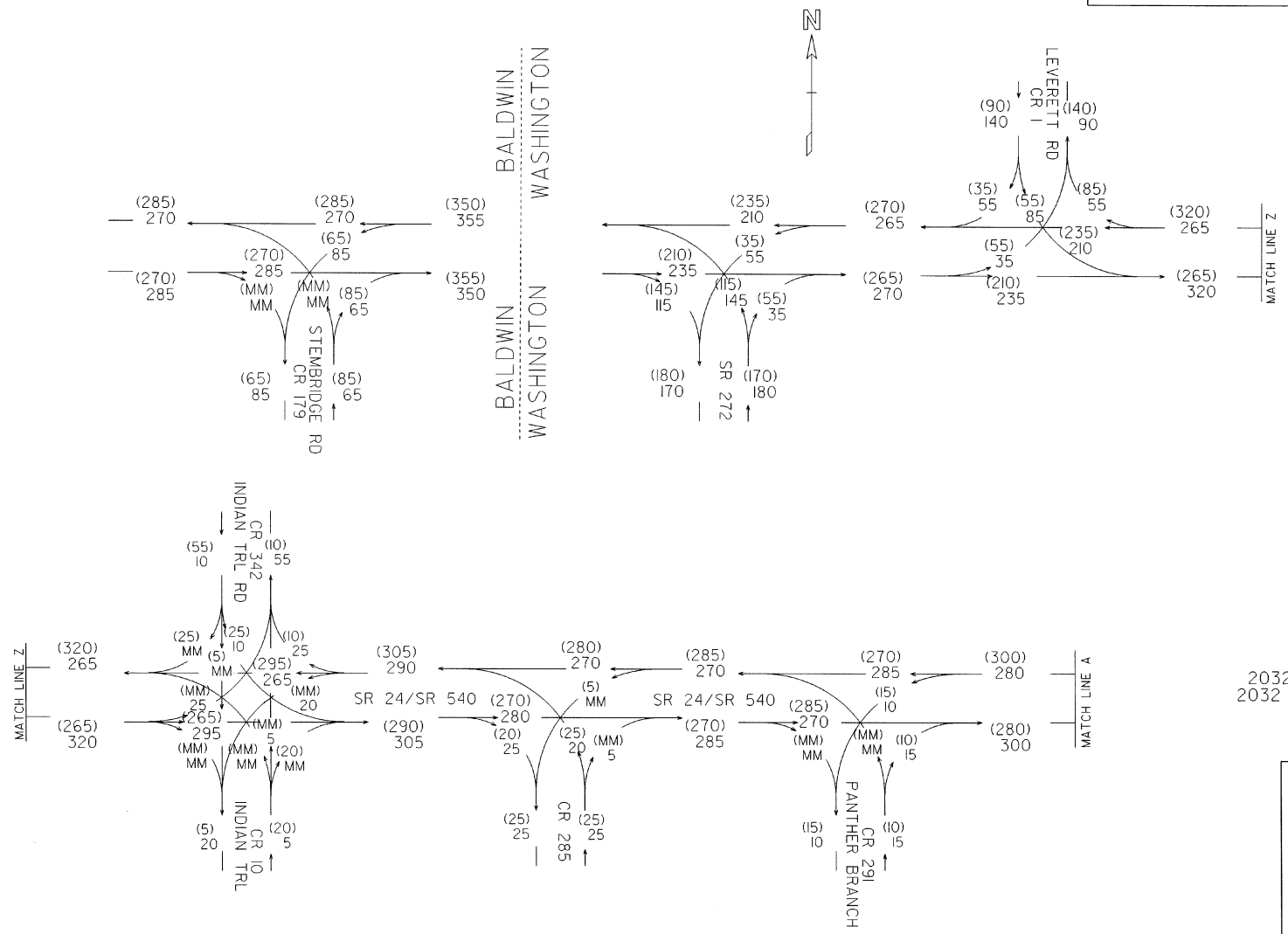


2032 AM DHV = 000
2032 PM DHV = (000)

T = 32%

HPPNF-0540-00(029)
WASHINGTON COUNTY
PI# 222280 & 222285

SR 24/SR 540 FM
CR 10/CR 342 TO
JUST WEST OF SR 68

& SR 24/SR 540 FM S
OF CR 186 TO CR 10
IN WASHINGTON CO

10-03

RFN
10/09

SHEET 4 OF 4

GEORGIA DEPARTMENT OF TRANSPORTATION
OFFICE OF ENVIRONMENT/LOCATION

WASHINGTON COUNTY

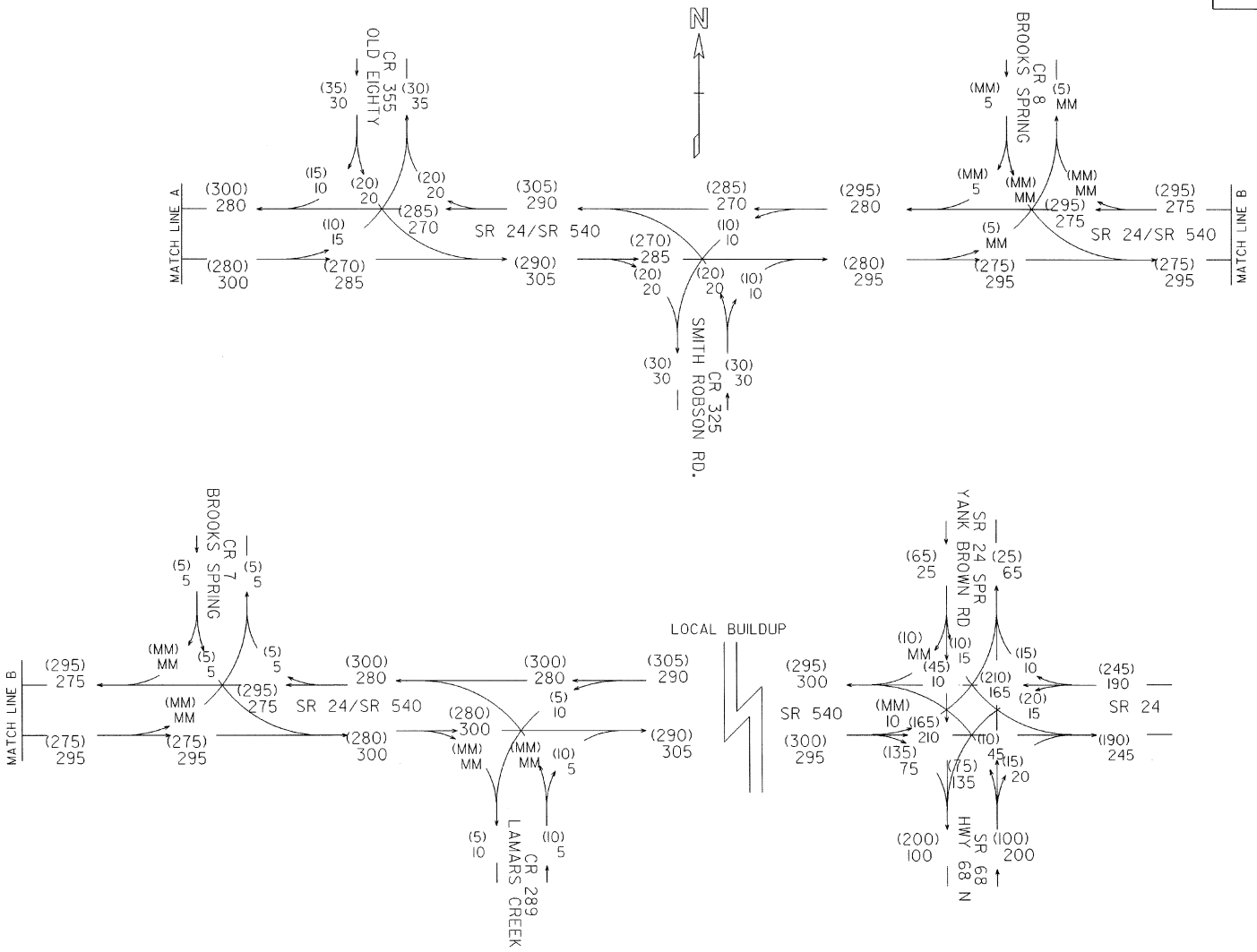


2032 AM DHV = 000
2032 PM DHV = (000)

T = 32%

HPPNF-0540-00(029)
WASHINGTON COUNTY
PI# 222280 & 222285

SR 24/SR 540 FM
CR 10/CR 342 TO
JUST WEST OF SR 68

& SR 24/SR 540 FM S
OF CR 186 TO CR 10
IN WASHINGTON CO

10-04

RFN
10/09