VALUE ENGINEERING CONSTRUCTABILITY STUDY OF THE *WIDENING AND RECONSTRUCTION OF SR 72 FROM CR 245/PEARL MILL ROAD TO THE SAVANNAH RIVER BRIDGE IN SOUTH CAROLINA*

PROJECT NUMBER: MSL-1226-00(200)

ATLANTA, GEORGIA

MARCH 23, 2006

Prepared by:
VE GROUP, L.L.C.

In Association With:

Georgia Department of Transportation

VALUE ENGINEERING STUDY TEAM LEADER

_____

William F. Ventry, P.E., C.V.S.
C.V.S. Registration No. 840603(LIFE)

Date: _____

TABLE OF CONTENTS

ITEM NO.	DESCRIPTION	PAGE NO.
I.	INTRODUCTION AND SUMMARY OF RECOMMENDATIONS	1
II.	LOCATION OF PROJECT	4
III.	TEAM MEMBERS AND PROJECT DESCRIPTION	5
IV.	INVESTIGATION PHASE	6
V.	SPECULATION PHASE	8
VI.	EVALUATION PHASE	10
	A. ALTERNATIVES	10
VII.	DEVELOPMENT PHASE	12

I. CONSTRUCTABILITY

A.	NEW BRIDGE	14
	(1) AS PROPOSED	14
	(2) VALUE ENGINEERING ALTERNATIVE NO. 1	16
	(3) VAULE ENGINEERING ALTERNATIVE NO. 2	19
B.	STORM DRAIN PIPE	22
	(1) AS PROPOSED	22
	(2) VALUE ENGINEERING ALTERNATIVE	24

II. MATERIALS

A.	EARTHWORK	27
	(1) AS PROPOSED	27
	(2) VALUE ENGINEERING ALTERNATIVE	29

TABLE OF CONTENTS

ITEM NO.	DESCRIPTION	PAGE NO.
III.	**TRAFFIC CONTROL/MAINTENANCE OF TRAFFIC**	
A.	EXISTING PAVEMENT	32
(1)	AS PROPOSED	32
(2)	VALUE ENHANCEMENT ALTERNATIVE NO. 1	34
(3)	VALUE ENGINEERING ALTERNATIVE NO. 2	36
B.	SIDEROAD CONNECTION	39
(1)	AS PROPOSED	39
(2)	VALUE ENGINEERING ALTERNATIVE	41
C.	SIGNING AND MARKING	42
(1)	AS PROPOSED	42
(2)	VALUE ENGINEERING ALTERNATIVE	44
IV.	**CONTRACTOR WORK HOURS**	
A.	CLOSURES	46
(1)	AS PROPOSED	46
(2)	VALUE ENGINEERING ALTERNATIVE	47
V.	**CONSTRUCTION TIME**	
A.	LENGTH OF TIME	48
(1)	AS PROPOSED	48
(2)	VALUE ENGINEERING ALTERNATIVE	49

I. INTRODUCTION

GENERAL

This Value Engineering report summarizes the results of the Value Engineering study performed by VE GROUP for the Georgia Department of Transportation. The study was performed on March 23, 2006.

VALUE ENGINEERING METHODOLOGY

The Value Engineering Team followed the basic Value Engineering procedure for conducting this type of analysis.

This process included the following phases:

1. Investigation
2. Speculation
3. Evaluation/Development
4. Report Preparation

Evaluation criteria identified as a basis for the comparison of alternatives included the following:

- Constructability
- Future Maintenance
- Construction Time
- Construction Cost

I. INTRODUCTION

SUMMARY OF RECOMMENDATIONS

It is the recommendation of the Value Engineering Team that the following Value Engineering Alternatives be carried into the Project Development process for the final plans and specifications.

RECOMMENDATION NUMBER 1- CONSTRUCTABILITY

The Value Engineering Team recommends that the following Value Engineering Alternatives be implemented.

A. NEW BRIDGE

Value Engineering Alternative Number 1: Use segmental construction.

If this recommendation can be implemented, there is a possible savings of ***$9,406,112.***

Value Engineering Alternative Number 2: Use spliced Bulb "T".

If this recommendation can be implemented, there is a possible savings of ***$11,581,792.***

B. STORM DRAIN PIPE

Value Engineering Alternative: Use constant grade with side slope drains.

If this recommendation can be implemented, there is a possible savings of ***$8,875.***

RECOMMENDATION NUMBER 2- MATERIALS

The Value Engineering Team recommends that the following Value Engineering Alternatives be implemented.

A. EARTHWORK

Value Engineering Alternative: Combine earthwork with adjacent project.

If this recommendation can be implemented, there is a possible savings of ***$556,400.***

B. MATERIAL FOR STAGING

Value Engineering Alternative: Verify availability and cost.

SUMMARY OF RECOMMENDATIONS *(continued)*

RECOMMENDATION NUMBER 3- TRAFFIC CONTROL

The Value Engineering Team recommends that the following Value Engineering Alternatives be implemented.

A. EXISTING PAVEMENT

Value Enhancement Alternative Number 1: Cul-de-sac or connect at both ends.

If this recommendation can be implemented, there is a possible cost increase of ***$22,455.***

B. SIDEROAD CONNECTION

Value Engineering Alternative: Combine Cherokee Road and CR 19 Balchin Road.

If this recommendation can be implemented, there is a possible savings of ***$244,685.***

C. SIGNING AND MARKING

Value Engineering Alternative: Comply with standards.

RECOMMENDATION NUMBER 4- CONTRACTOR WORK HOURS

The Value Engineering Team recommends that the Value Engineering Alternative be implemented.

A. CLOSURES

Value Engineering Alternative: No closures from 7am-9am and 4pm-6pm, Saturdays and Sundays.

RECOMMENDATION NUMBER 5- CONSTRUCTION TIME

The Value Engineering Team recommends that the Value Engineering Alternative be implemented.

A. LENGTH OF TIME

Value Engineering Alternative: Use 24 months for overall project.

II. LOCATION OF PROJECT

III. TEAM MEMBERS AND PROJECT DESCRIPTION

TEAM MEMBERS

NAME	AFFILIATION	EXPERTISE	PHONE
William F. Ventry, P.E., C.V.S.	VE Group	Team Leader	850/627-3900
Bruce Nicholson	VE Group	Construction	850-627-3900
Tom Hartley, P.E., C.V.S.	VE Group	Roadway Design/Traffic	850/627-3900
John Ledbetter, Jr., P.E., R.L.S.	VE Group	Structures	850/627-3900

PROJECT DESCRIPTION

The project consists of the widening and reconstruction of SR 72 from CR 245/Pearl Mill Road to approximately 0.57 miles east of the Savannah River Bridge in South Carolina. This project includes a new two-lane bridge parallel to the existing Savannah Bridge for the westbound traffic. The total project length is 7.40 miles.

IV. INVESTIGATION PHASE

VALUE ENGINEERING STUDY BRIEFING

WIDENING AND RECONSTRUCTION OF SR 72 FROM CR 245/PEARL MILL ROAD TO SAVANNAH RIVER **March 23, 2006**		
NAME	**AFFILIATION**	**PHONE**
William F. Ventry, P.E., C.V.S.	VE Group	850/627-3900
Bruce Nicholson	VE Group	850/627-3900
Tom Hartley, P.E., C.V.S.	VE Group	850/627-3900
John Ledbetter, Jr., P.E., R.L.S.	VE Group	850/627-3900
Lisa Myers	GDOT	404/651-7468
Todd Wood	GDOT	770/531-6049
Randy Hart	GDOT	404/656-5306
Stenley Mack	GDOT	404/635-8150
Alexis John	GDOT	404/699-6865
Doug Franks	GDOT	404/656-5289
Simeon Robinson	Wilbur Smith & associates	770/936-8650
Joe Leoni	Arcadis	770/431-8666
Otis Clark	GDOT	404/463-6265

STUDY RESOURCES

NAME	AFFILIATION	PHONE
Troy Patterson	GDOT	404/651-7468
William Nickas	FLDOT	850/414-4260
Craig Finley	FINLEY ENGINEERS	850/894-1600
James Vinson	WSA	865/963-4351
Dan Dock	FINLEY ENGINEERS	850/894-1600

IV. INVESTIGATION PHASE

The following areas have been identified by the Value Engineering Team as areas of focus and investigation for the Value Engineering process:

I. CONSTRUCTABILITY

- **A. NEW BRIDGE**
- **B. STORM DRAIN PIPE**

II. MATERIALS

- **A. EARTHWORK**

III. TRAFFIC CONTROL/MAINTENANCE OF TRAFFIC

- **A. EXISTING PAVEMENT**
- **B. SIDEROAD CONNECTION**
- **C. SIGNING AND MARKING**

IV. CONTRACTOR WORK HOURS

- **A. CLOSURES**

V. CONSTRUCTION TIME

- **A. LENGTH OF TIME**
- **B. SIGNING AND MARKING**

V. SPECULATION PHASE

Ideas generated, utilizing the brainstorming method, for performing the functions of previously identified areas of focus.

I. CONSTRUCTABILITY

A. NEW BRIDGE

- Use segmental construction.
- Use spliced Bulb "T".

B. STORM DRAIN PIPE

- Use constant grade with side slope drains.

II. MATERIALS

A. EARTHWORK

- Combine earthwork with adjacent project.

III. TRAFFIC CONTROL/MAINTENANCE OF TRAFFIC

A. EXISTING PAVEMENT

- Cul-de-sac or connect at both ends.

B. SIDEROAD CONNECTION

- Combine Cherokee Road and CR 19 Balchin Road.

C. SIGNING AND MARKING

- Comply with standards.

V. SPECULATION PHASE

IV. CONTRACTOR WORK HOURS

A. CLOSURES

- No closures from 7am-9am and 4pm-6pm, Saturdays and Sundays.

V. CONSTRUCTION TIME

A. LENGTH OF TIME

- Use 24 months for overall project.

VI. EVALUATION PHASE

A. ALTERNATIVES

The following alternatives were formulated during the "eliminate and combine" portion of the Evaluation/Development Phase.

I. CONSTRUCTABILITY

A. NEW BRIDGE

Value Engineering Alternative Number 1: Use segmental construction.

Value Engineering Alternative Number 2: Use spliced Bulb "T".

B. STORM DRAIN PIPE

Value Engineering Alternative: Use constant grade with side slope drains.

II. MATERIALS

A. EARTHWORK

Value Engineering Alternative: Combine earthwork with adjacent project.

III. TRAFFIC CONTROL/MAINTENANCE OF TRAFFIC

A. EXISTING PAVEMENT

Value Enhancement Alternative: Cul-de-sac or connect at both ends.

B. SIDEROAD CONNECTION

Value Engineering Alternative: Combine Cherokee Road and CR 19 Balchin Road.

C. SIGNING AND MARKING

Value Engineering Alternative: Comply with standards.

VI. EVALUATION PHASE

A. ALTERNATIVES

IV. CONTRACTOR WORK HOURS

A. CLOSURES

Value Engineering Alternative: No closures from 7am-9am and 4pm-6pm, Saturdays and Sundays.

V. CONSTRUCTION TIME

A. LENGTH OF TIME

Value Engineering Alternative: Use 24 months for overall project.

VII. DEVELOPMENT PHASE

I. CONSTRUCTABILITY

A. NEW BRIDGE

(1) AS PROPOSED
(2) VALUE ENGINEERING ALTERNATIVE NUMBER 1
(3) VALUE ENGINEERING ALTERNATIVE NUMBER 2

B. STORM DRAIN PIPE

(1) AS PROPOSED
(2) VALUE ENGINEERING ALTERNATIVE

II. MATERIALS

A. EARTHWORK

(1) AS PROPOSED
(2) VALUE ENGINEERING ALTERNATIVE

III. TRAFFIC CONTROL

A. EXISTING PAVEMENT

(1) AS PROPOSED
(2) VALUE ENHANCEMENT ALTERNATIVE NUMBER 1
(3) VALUE ENGINEERING ALTERNATIVE NUMBER 2

B. SIDEROAD CONNECTION

(1) AS PROPOSED
(2) VALUE ENGINEERING ALTERNATIVE

C. SIGNING AND MARKING

(1) AS PROPOSED
(2) VALUE ENGINEERING ALTERNATIVE

VII. DEVELOPMENT PHASE

IV. CONTRACTOR WORK HOURS

A. CLOSURES

(1) AS PROPOSED
(2) VALUE ENGINEERING ALTERNATIVE

V. CONSTRUCTION TIME

A. LENGTH OF TIME

(1) AS PROPOSED
(2) VALUE ENGINEERING ALTERNATIVE

VII. DEVELOPMENT PHASE

I. CONSTRUCTABILITY

A. NEW BRIDGE

1. "As Proposed"

The as-proposed bridge consists of 5-Plate Girders on concrete caps supported by a single 10-ft. drilled shaft. The bridge is 2,038 ft. in length and 41.25 ft. in width. The proposed spans match the existing bridge, which will carry the eastbound traffic. The spans are two at 193 ft. on the ends and seven at 236 ft. The bridge crosses the Savannah River (Richard B. Russell Lake) with water depths of up to 110 ft. The lake bottom appears to be bedrock, and the existing piers are founded on spread footings.

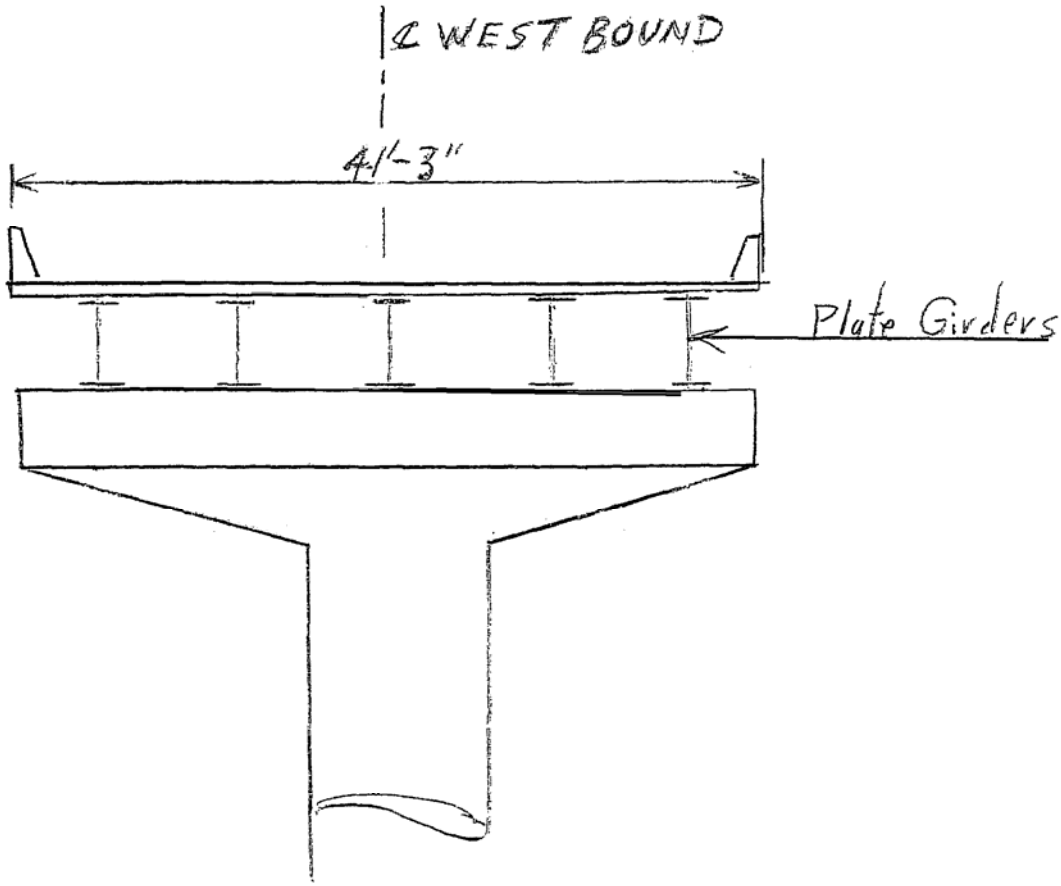

I-A

As Proposed

VII. DEVELOPMENT PHASE

I. CONSTRUCTABILITY

A. NEW BRIDGE

2. Value Engineering Alternative Number 1

This alternative consists of using a Segmental Box Girder Superstructure at the same span configuration as the proposed, and on the same type of foundation. The foundation will be concrete caps supported on a single 10-ft. diameter drilled shaft. The method of construction will be the balance cantilever method. The concrete box girder superstructure will offer advantages over the plate girder bridge in that maintenance will be minimized. Painting of the steel girders will be eliminated.

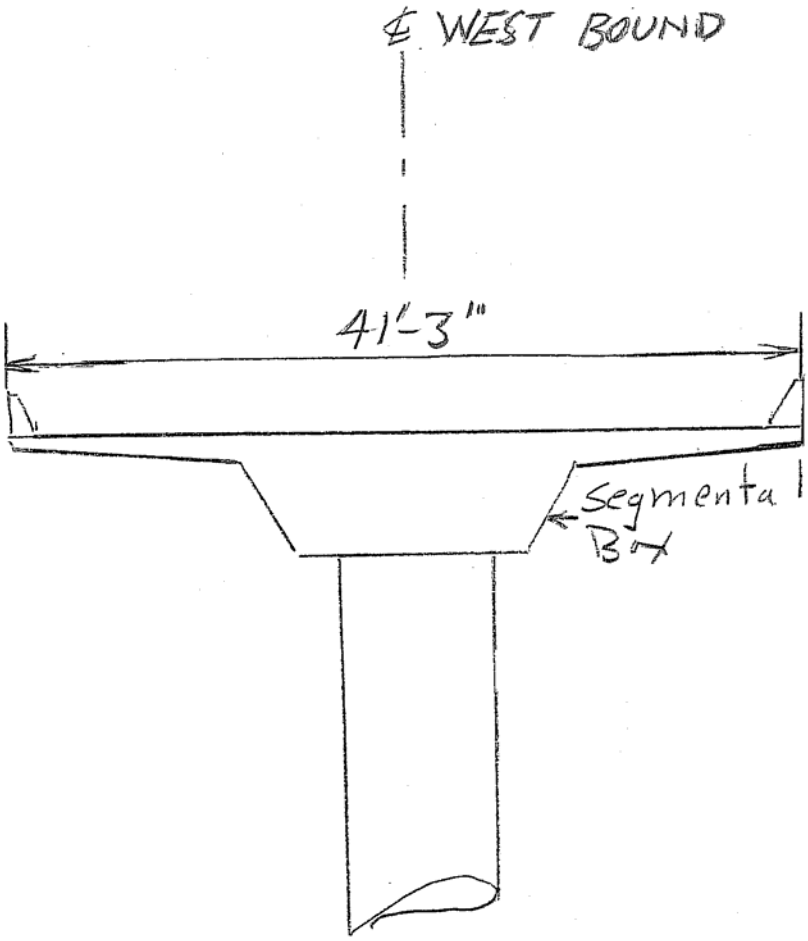

I-A

VEALT #1

I. CONSTRUCTABILITY
A. NEW BRDIGE
VALUE ENGINEERING ALTERNATIVE NUMBER 1
COST COMPARISON SHEET

DESCRIPTION	UNITS	UNIT COST	PROP'D QTY.	PROP'D COST	V.E. QTY.	V.E. COST
PLATE GIRDER SUPERSTRUCTURE ON CONCRETE CAPS AND 10 FT. DRILLED SHAFTS	SF	$250.00	84,068.0	$21,017,000	0.0	$0
SEGMENTAL CONCRETE BOX GIRDER SUPERSTRUCTURE	SF	$110.00	0.0	$0	84,068.0	$9,247,480
CONCRETE CAP	CY	$500.00	0.0	$0	1,833.0	$916,500
10 FT. DRILLED SHAFTS	LF	$3,200.00	0.0	$0	1,120.0	$3,584,000
SUBTOTAL				**$21,017,000**		**$13,747,980**
E & C	10%			$2,101,700		$1,374,798
INFLATION (3% @ 6 YEARS)	19.4%			$4,077,298		$2,667,108
GRAND TOTAL				**$27,195,998**		**$17,789,886**

POSSIBLE SAVINGS: $9,406,112

VII. DEVELOPMENT PHASE

I. CONSTRUCTABILITY

A. NEW BRIDGE

3. Value Engineering Alternative Number 2

This alternative consists of 5 lines of Spliced Bulb Tee Beams on concrete caps supported by a single 10-ft. diameter drilled shaft. The Drilled Shaft is socketed an additional length into bedrock in order to carry the heavy Bulb Tees. The Bulb Tees are constructed using the balanced cantilever method. The span configuration is the same as the proposed. The Spliced Bulb Tees offer some advantages over the Plate Girders. One such advantage is the minimized maintenance due to concrete beams instead of steel over water.

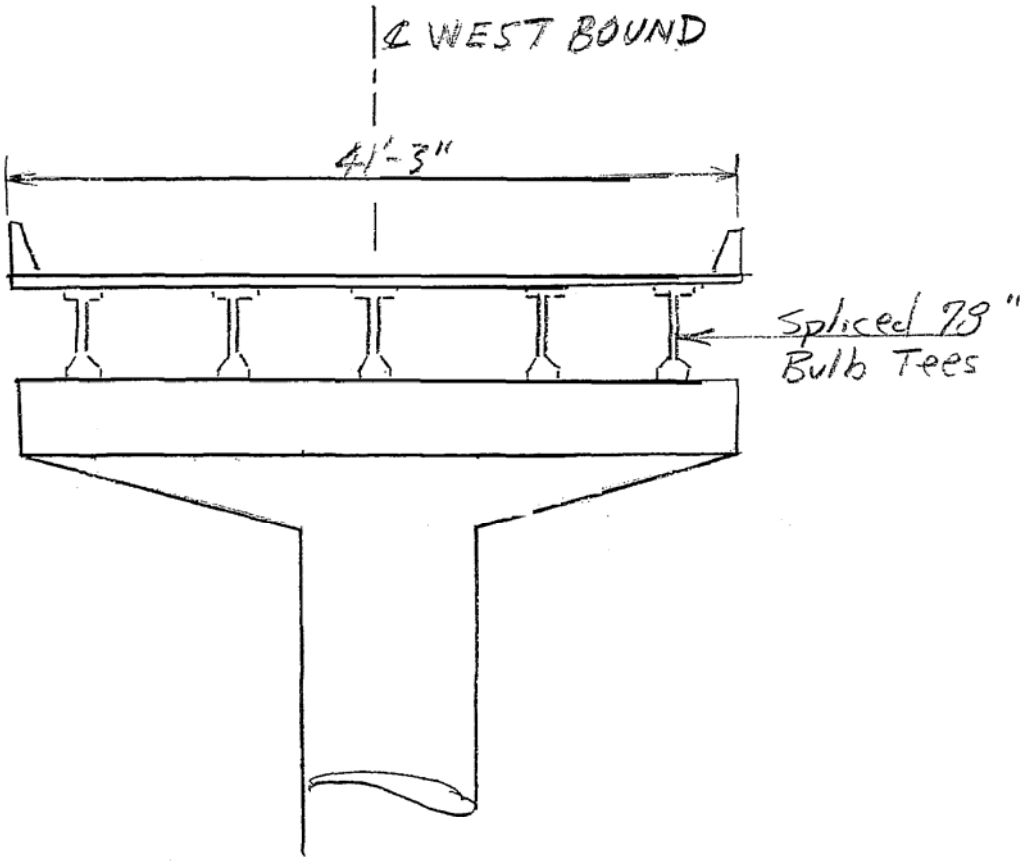

I-A

VE ALT #2

I. CONSTRUCTABILITY
A. NEW BRDIGE
VALUE ENGINEERING ALTERNATIVE NUMBER 2
COST COMPARISON SHEET

DESCRIPTION	UNITS	UNIT COST	PROP'D QTY.	PROP'D COST	V.E. QTY.	V.E. COST
PLATE GIRDER SUPERSTRUCTURE ON CONCRETE CAPS AND 10 FT. DRILLED SHAFTS	SF	$250.00	84,068.0	$21,017,000	0.0	$0
FIVE INES OF 78" SPLICED BULB TEE BEAM SUPERSTRUCTURE	SF	$90.00	0.0	$0	84,068.0	$7,566,120
CONCRETE CAP	CY	$500.00	0.0	$0	1,833.0	$916,500
10 FT. DRILLED SHAFTS	LF	$3,200.00	0.0	$0	1,120.0	$3,584,000
SUBTOTAL				**$21,017,000**		**$12,066,620**
E & C	10%			$2,101,700		$1,206,662
INFLATION (3% @ 6 YEARS)	19.4%			$4,077,298		$2,340,924
GRAND TOTAL				**$27,195,998**		**$15,614,206**

POSSIBLE SAVINGS: $11,581,792

VII. DEVELOPMENT PHASE

I. CONSTRUCTABILITY

B. STORM DRAIN PIPE

1. "As Proposed"

The project proposes to use a typical line of cross drain extending from the approximate ground elevation at the inlet end of the pipe and continuing on a steady grade to the approximate ground elevation at the outlet end. At some locations, this requires an extra depth median drop inlet and the slope of the pipe exceeds 10% and bituminous treated corrugated metal pipe is required.

The storm drain pipe located at Sta. 156+78 was selected to use as an example in this "As Proposed" description. The 18" pipe is on a rather steep grade of over 14% and the median drop inlet is over 19' in depth.

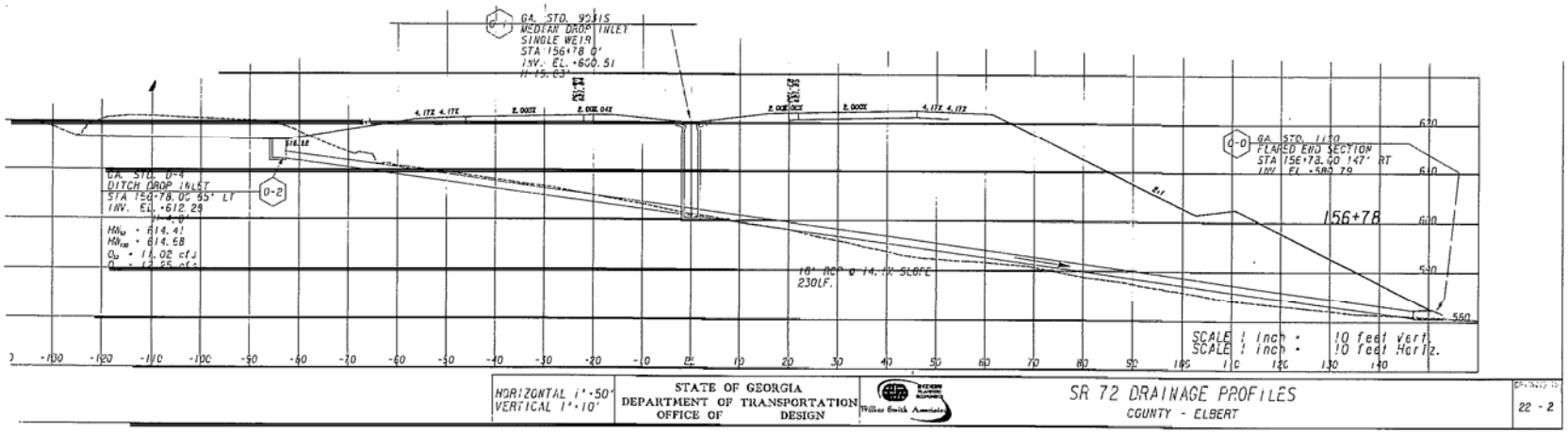

I. CONSTRUCTABILITY

B. STORM DRAIN PIPE

AS PROPOSED

VII. DEVELOPMENT PHASE

I. CONSTRUCTABILITY

B. STORM DRAIN PIPE

2. Value Engineering Alternative

The Value Engineering Alternative to the proposed cross drain method is to use a lesser grade on the cross drain under the roadway proper and then use a slope drain pipe down the embankment slope. In the location focused on as the study example, the inlet box was eliminated due to the flatter grade, which has now become approximately 7%, eliminating the requirement for metal pipe under the roadway. The height of the median drop inlet is significantly decreased making it much more maintainable.

There is a concrete collar poured around the intersection of the cross drain and the slope drain. The study team recommends that there also be included a couple of tie-down straps back into the embankment to reduce the possibility of separation. On this example, a cost savings of almost $9,000 would be realized. Over the length of the project, if this type design was used, the savings could become significant.

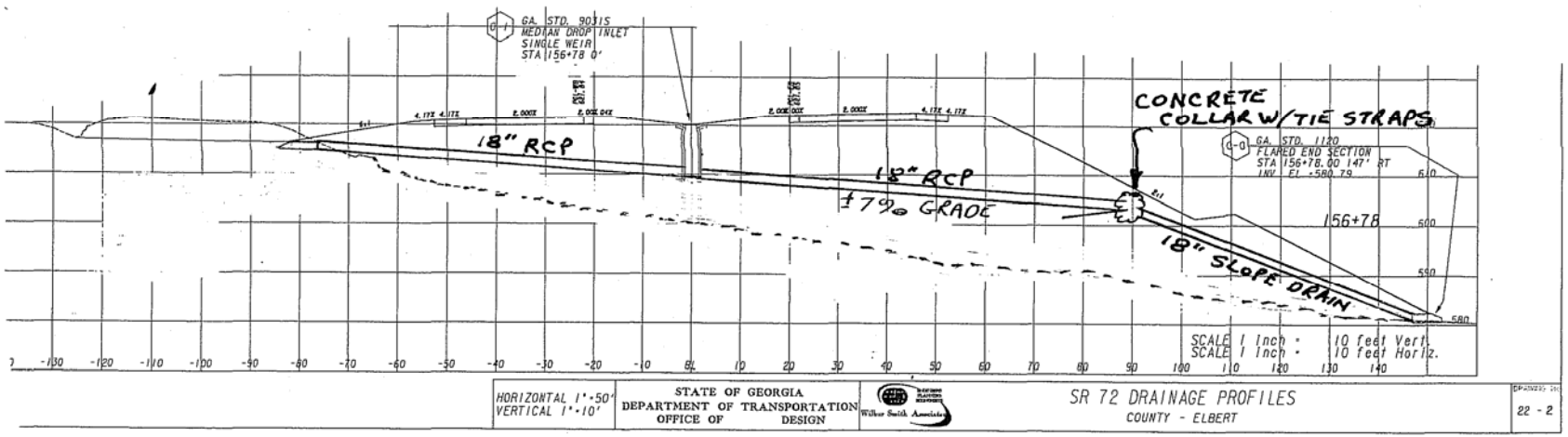

I. CONSTRUCTABILITY

B. STORM DRAIN PIPE

VE ALTERNATIVE

I. CONSTRUCTABILITY
B. STORM DRAIN PIPES
VALUE ENGINEERING ALTERNATIVE
COST COMPARISON SHEET

DESCRIPTION	UNITS	UNIT COST	PROP'D QTY.	PROP'D COST	V.E. QTY.	V.E. COST
18” storm drain pipe	LF	$41.50	230.0	$9,545	155.0	$6,433
Median drop inlet	EA	$3,330.00	2.0	$6,660	1.0	$3,330
Median drop inlet extra depth	LF	$255.00	13.6	$3,468	4.0	$1,020
18” slope drain	LF	$30.65	0.0	$0	55.0	$1,686
Concrete collar with straps	CY	$460.00	0.0	$0	1.0	$460
SUBTOTAL				**$19,673**		**$12,929**
INFLATION	20%			$3,935		$2,586
TRAFFIC CONTROL/MOT	1.2%			$236		$155
CONTINGENCY	10%			$1,967		$1,293
GRAND TOTAL				**$25,811**		**$16,936**

POSSIBLE SAVINGS: $8,875

VII. DEVELOPMENT PHASE

II. MATERIALS

A. EARTHWORK

1. "As Proposed"

Project MSL-1226 (200) is a major grading project with an estimated 900,000 cubic yards of unclassified excavation. By reviewing the mainline profile and as discussed at the presentation of this project, the majority of the earthwork is actually borrow. There were no definite estimates available from the designer as to the actual breakdown of the earthwork item, but it would appear that perhaps only one-third of the project would actually be unclassified excavation. Since so much material is required, and not available on site, it will have to be trucked in. This means that the cost of the earthwork item needs to be adjusted to include a line item for borrow. The cost of earthwork for this project is therefore $4,758,000 rather than the proposed cost of $3,474,000.

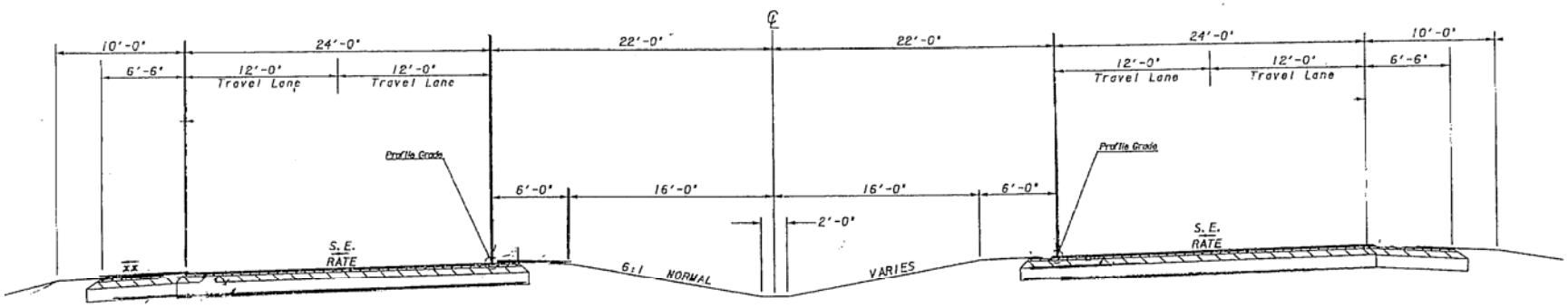

Typical Section

II. MATERIALS

A. EARTHWORK

As Proposed

VII. DEVELOPMENT PHASE

II. MATERIALS

A. EARTHWORK

2. Value Engineering Alternative

The most pressing problem with the earthwork on this project is the fact that there is an estimated 600,000 cubic yards of borrow. This is a tremendous amount of material that will have to be located and hauled in by the contractor. More than likely, the contractor will have to acquire a site or sites to obtain this material. The material will have to be trucked from the borrow areas. Again, as previously stated, this will also influence a higher cost for the earthwork item.

The Value Engineering Alternative is to lower the grade throughout the project starting east of CR 45 to near the Richard B. Russell Lake. This should not affect driveway connections or grade crossings significantly. Since this should have off-setting right-of-way costs, right-of-way was not considered, i.e. lowering the grade would increase right-of-way in the cuts as the slope distance is increased, and decrease the right-of-way in the fills as the slope distance is decreased. Lowering the grade 1.5 ft. will reduce the borrow item by approximately 200,000 CY, and result in a need for approximately 400,000 cubic yards for this project.

The recommendation of the study team is that the design be modified to significantly reduce this huge amount of borrow material. As an added concept, project MSL-1226 (300) located immediately to the east of the study project is going to produce an estimated 350,000 cubic yards of waste. There needs to be some consideration to somehow use the waste material from one project as borrow for the adjacent project.

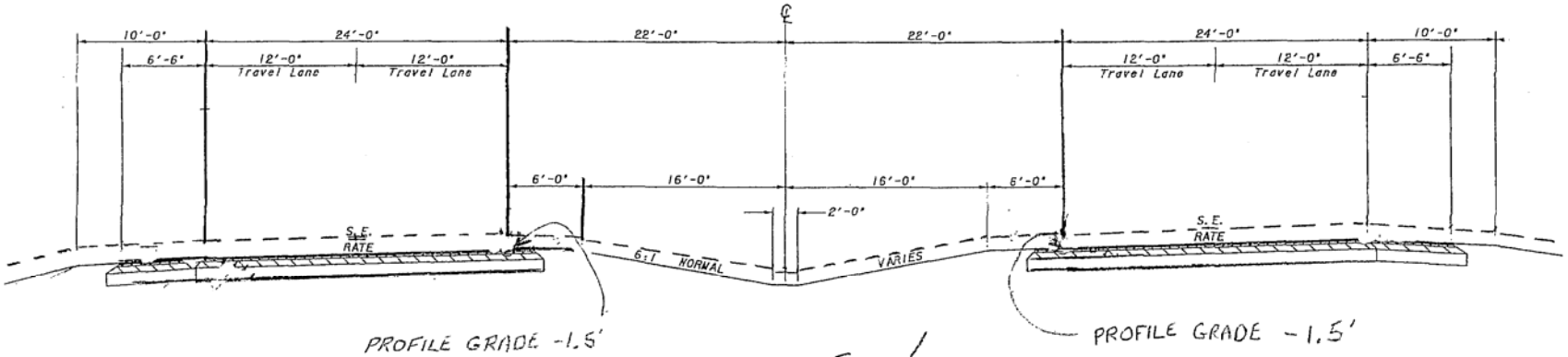

Typical Section

II. MATERIALS

A. EARTHWORK

VE ALT

II. MATERIALS
A. EARTHWORK
VALUE ENGINEERING ALTERNATIVE
COST COMPARISON SHEET

DESCRIPTION	UNITS	UNIT COST	PROP'D QTY.	PROP'D COST	V.E. QTY.	V.E. COST
UNCLASSIFIED EXCAVATION	CY	$3.86	300,000.0	$1,158,000	500,000.0	$1,930,000
BORROW	CY	$6.00	600,000.0	$3,600,000	400,000.0	$2,400,000
SUBTOTAL				**$4,758,000**		**$4,330,000**
INFLATION	20%			$951,600		$866,000
TRAFFIC CONTROL/MOT	0%			$0		$0
CONTINGENCY	10%			$475,800		$433,000
GRAND TOTAL				**$6,185,400**		**$5,629,000**

POSSIBLE SAVINGS: $556,400

VII. DEVELOPMENT PHASE

III. TRAFFIC CONTROL

A. EXISTING PAVEMENT

1. "As Proposed"

The proposed design will terminate abandoned roadways with barricades. The location of these barricades are as follows:

1. CR 17/Welcome Church Road
2. Old SR 72 between STA 165+00 and STA 205+00

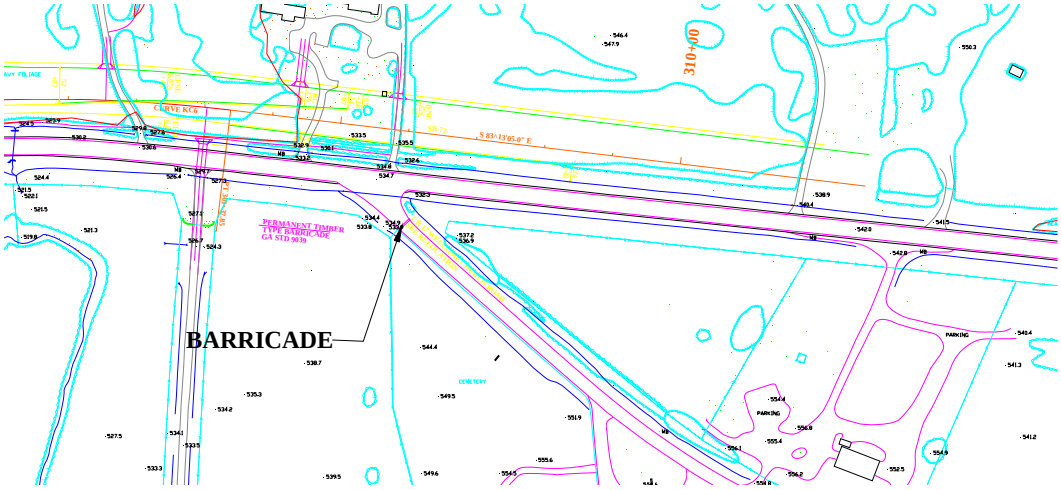

AS PROPOSED AT CR 17/WELCOME CHURCH ROAD

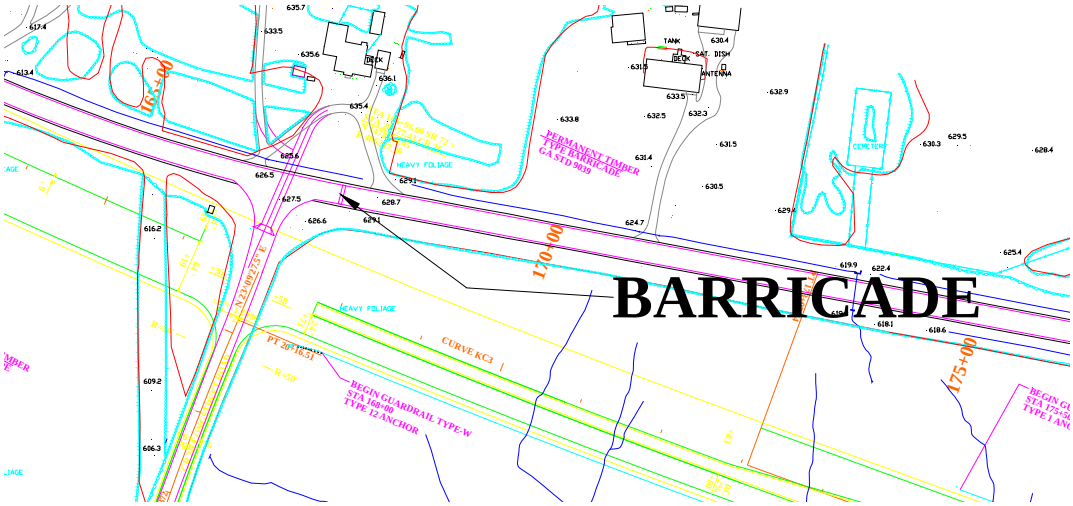

AS PROPOSED AT WEST END OF OLD SR 72

VII. DEVELOPMENT PHASE

III. TRAFFIC CONTROL

A. EXISTING PAVEMENT

1. "As Proposed"

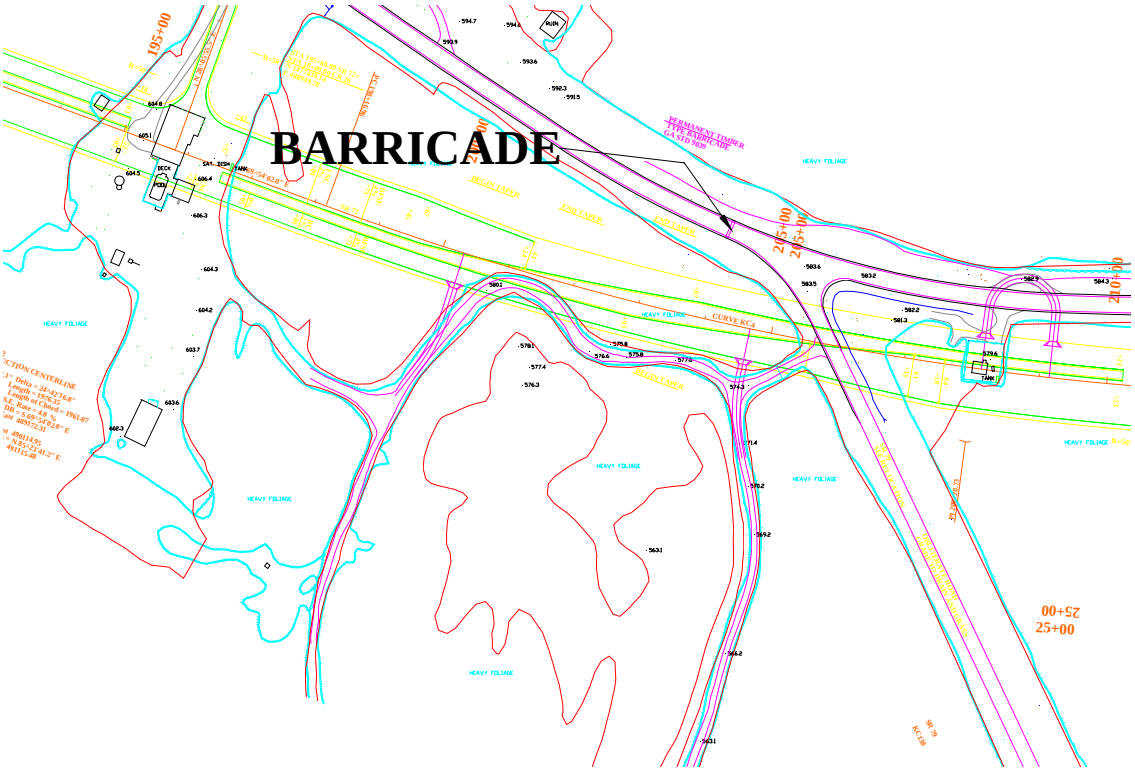

AS PROPOSED AT EAST END OF OLD SR 72

VII. DEVELOPMENT PHASE

III. TRAFFIC CONTROL

A. EXISTING PAVEMENT

2. Value Enhancement Alternative Number 1

The Value Engineering Team recommends using a cul-de-sac at the end of the abandoned part of CR 17/Welcome Church Road to replace the barricade. The cul-de-sac will provide emergency vehicles and motorists a better turn around location.

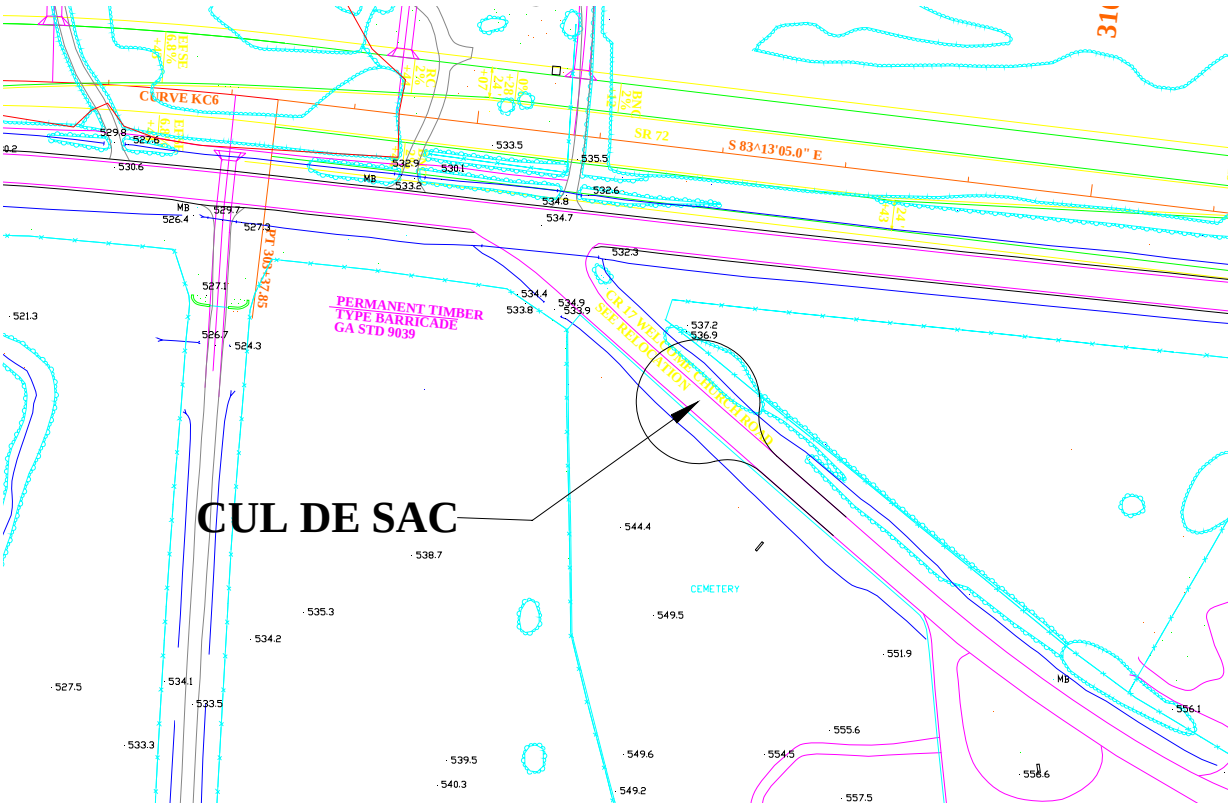

VALUE ENHANCEMENT ALTERNATIVE
CUL DE SAC @ CR 17

III. TRAFFIC CONTROL
A. EXISTING PAVEMENT
VALUE ENHANCEMENT ALTERNATIVE NUMBER 1
COST COMPARISON SHEET

DESCRIPTION	UNITS	UNIT COST	PROP'D QTY.	PROP'D COST	V.E. QTY.	V.E. COST
CR ROAD PAVEMENT	SY	$20.00	0.0	$0	933.3	$18,666
SUBTOTAL				**$0**		**$18,666**
INFLATION (2 YEARS @ 5%)	10.3%			$0		$1,923
TRAFFIC CONTROL/MOT	0%			$0		$0
CONTINGENCY	10%			$0		$1,866
RIGHT-OF-WAY	AC	$10,000.00	0.0	$0		$0
GRAND TOTAL				**$0**		**$22,455**

POSSIBLE COST INCREASE: $22,455

VII. DEVELOPMENT PHASE

III. TRAFFIC CONTROL

A. EXISTING PAVEMENT

3. Value Engineering Alternative Number 2

Old SR 72 between STA 165+00 and STA 205+00 has the ability to connect to the new alignment of SR 72 at the intersections of CR 26/Longstreet Road and at SR 79 where SR 72 already have median openings designed.

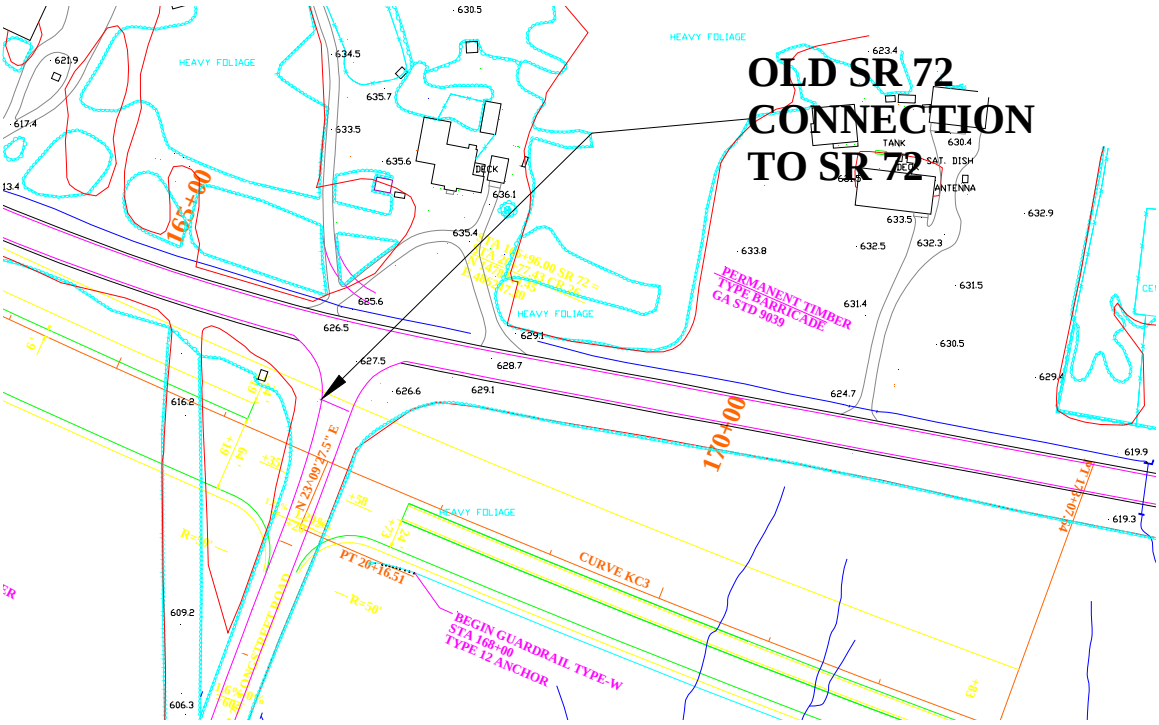

VALUE ENGINEERING ALTERNATIVE
FOR WEST CONNECTION OF OLD SR72

VII. DEVELOPMENT PHASE

III. TRAFFIC CONTROL

A. EXISTING PAVEMENT

3. Value Engineering Alternative Number 2 (continued)

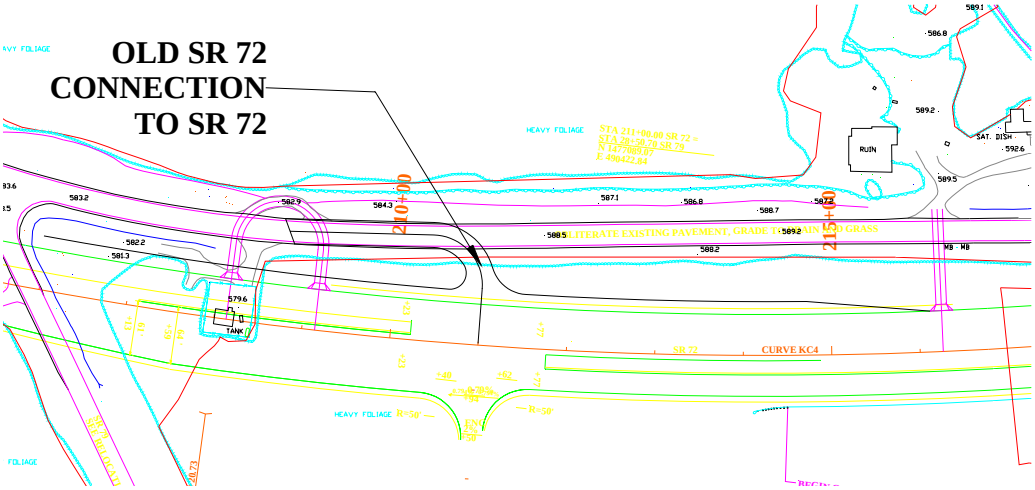

VALUE ENGINEERING ALTERNATIVE
FOR EAST CONNECTION TO OLD SR 72

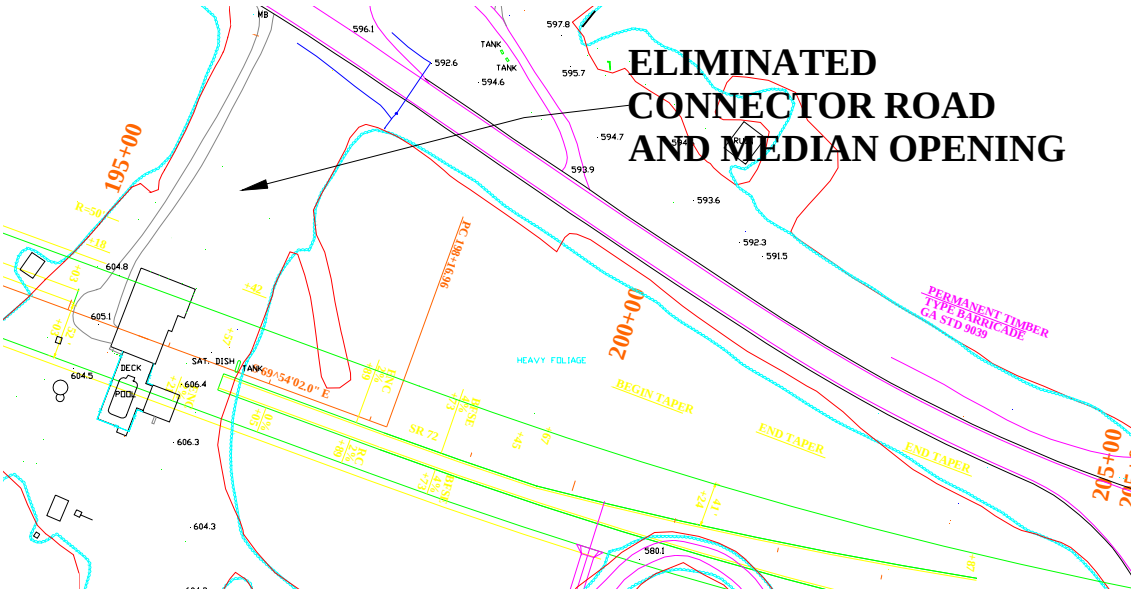

III. TRAFFIC CONTROL
A. EXISTING PAVEMENT
VALUE ENGINEERING ALTERNATIVE NUMBER 2
COST COMPARISON SHEET

DESCRIPTION	UNITS	UNIT COST	PROP'D QTY.	PROP'D COST	V.E. QTY.	V.E. COST
CR ROAD PAVEMENT	SY	$20.00	0.0	$0	244.4	$4,889
CONNECTOR ROAD 250’	SY	$20.00	333.3	$6,666	0.0	$0
CONNECTOR ROAD EMBANKMENT	CY	$3.86	3,240.7	$12,509	0.0	$0
BARRICADE	LF	$85.20	60.0	$5,112	0.0	$0
SUBTOTAL				**$24,287**		**$4,889**
INFLATION (2 YEARS @ 5%)	19.4%			$4,712		$949
TRAFFIC CONTROL/MOT	0%			$0		$0
CONTINGENCY	10%			$2,429		$489
RIGHT-OF-WAY	AC	$10,000.00	0.0	$0		$0
GRAND TOTAL				**$31,427**		**$6,327**

POSSIBLE SAVINGS: $25,101

VII. DEVELOPMENT PHASE

III. TRAFFIC CONTROL

B. SIDEROAD CONNECTION

1. "As Proposed"

CR 21/Cherokee Road will be realigned from a point approximately 2,500' from SR 72. The new alignment will be shifted northerly to connect with SR 72 with a 90° skew as shown below.

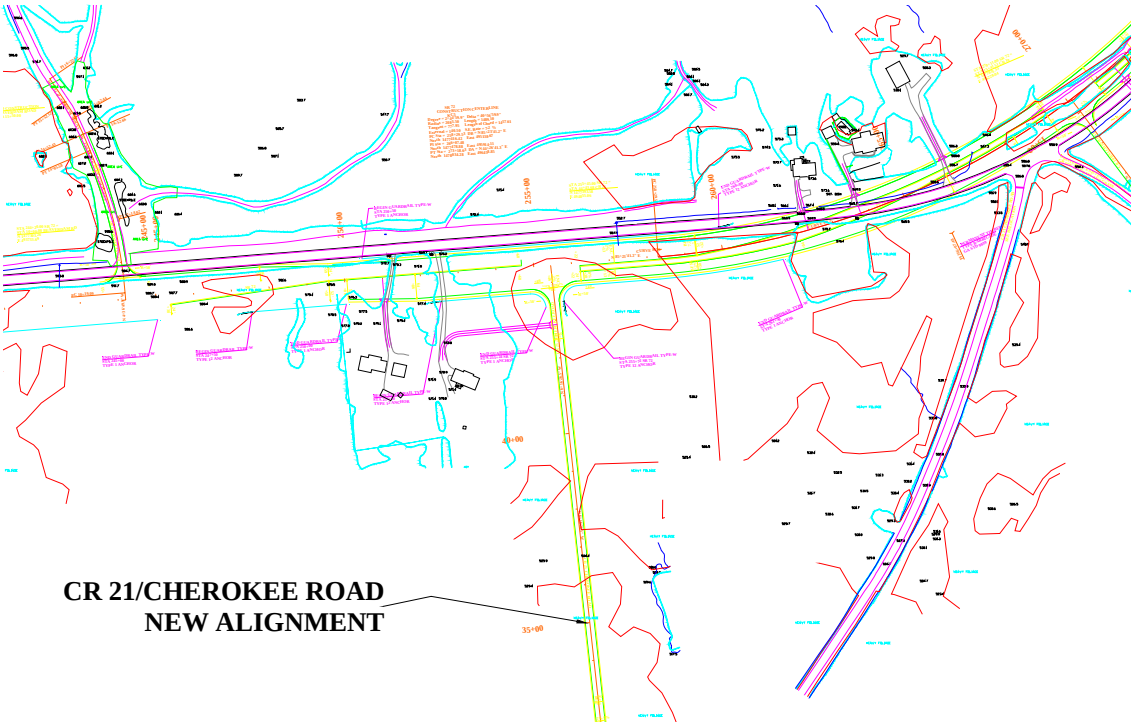

AS PROPOSED CR 21

VII. DEVELOPMENT PHASE

III. TRAFFIC CONTROL

B. SIDEROAD CONNECTION

2. Value Engineering Alternative

The VE Team recommends intersecting CR 21/Cherokee Road with CR 19/Balchin Road as shown below. This alignment will reduce the amount of reconstruction of CR 21 and the required right-of-way.

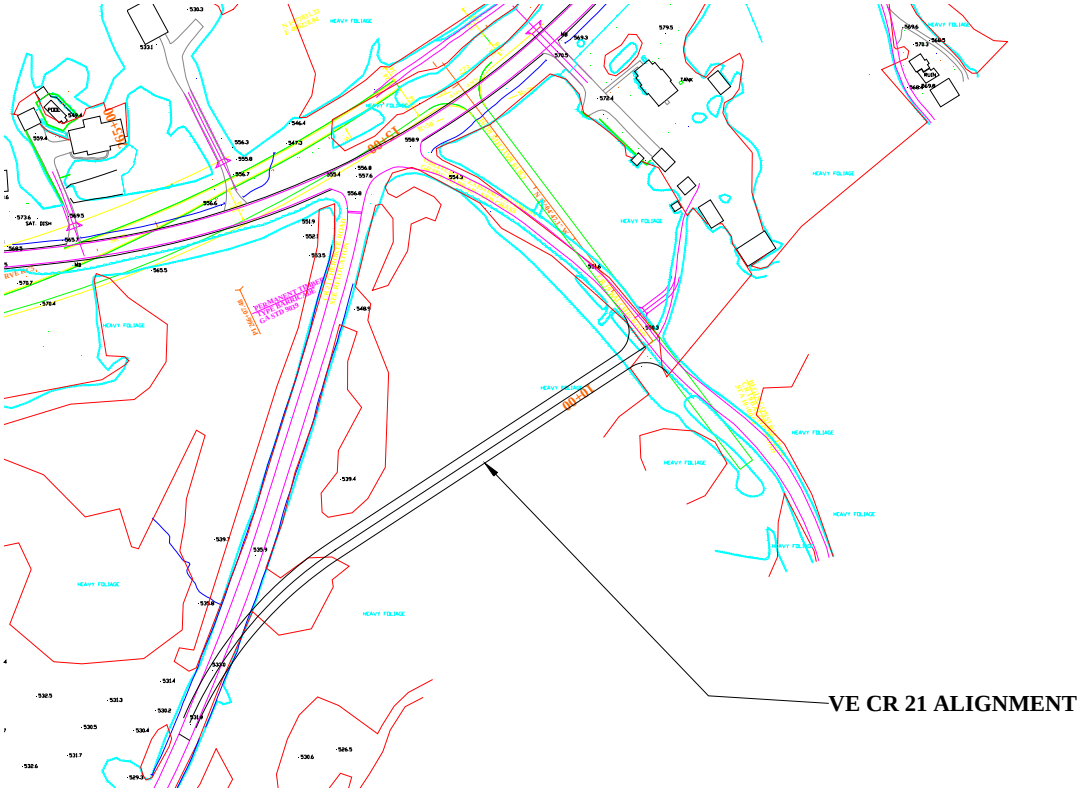

VALUE ENGINEERING ALTERNATIVE ALIGNMENT

III. TRAFFIC CONTROL
B. SIDE ROAD CONNECTION
VALUE ENGINEERING ALTERNATIVE
COST COMPARISON SHEET

DESCRIPTION	UNITS	UNIT COST	PROP'D QTY.	PROP'D COST	V.E. QTY.	V.E. COST
PAVEMENT	SY	$20.00	8,800.0	$176,000	2,133.3	$42,666
CROSS OVER PAVEMENT	SY	$25.00	1,871.1	$46,778	0.0	$0
SUBTOTAL				**$222,778**		**$42,666**
INFLATION (2 YEARS @ 5%)	19.41%			$43,241		$8,281
TRAFFIC CONTROL/MOT	0%			$0		$0
CONTINGENCY	10%			$22,279		$4,266
RIGHT-OF-WAY	AC	$4,000.00	5.7	$22,800	2.8	$11,200
GRAND TOTAL				**$311,098**		**$66,413**

POSSIBLE SAVINGS: $244,685

VII. DEVELOPMENT PHASE

III. TRAFFIC CONTROL

C. SIGNING AND MARKING

1. "As Proposed"

The proposed signing for project MSL-1226 (200) was presented for review to the study team. The *MUTCD* and Georgia Department of Transportation requirements are to be adhered to in the placement and application of all traffic control devices

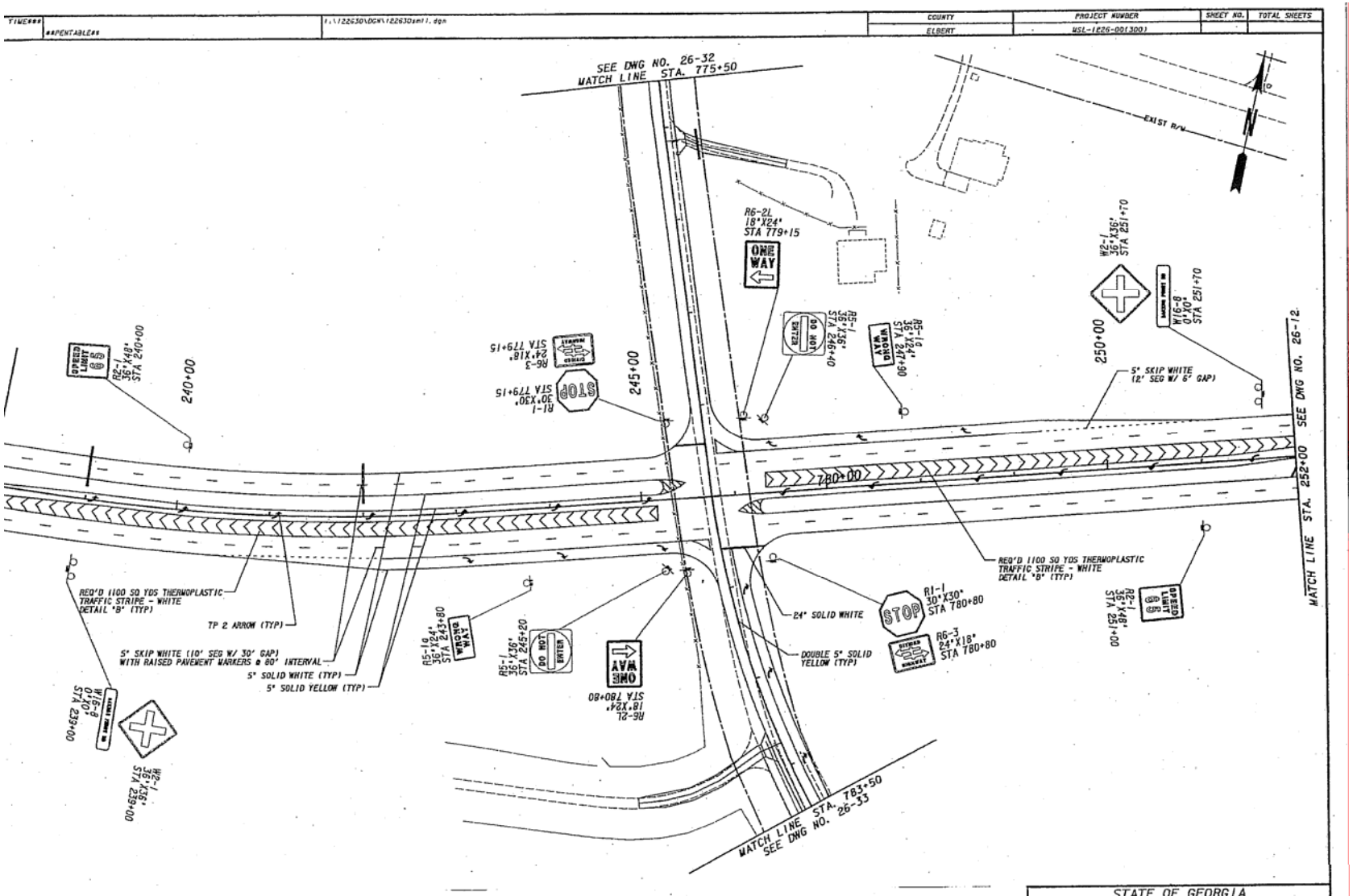

III TRAFFIC CONTROL

INTERSECTION SIGNING

AS PROPOSED

STATE OF GEORGIA
DEPARTMENT OF TRANSPORTATION
OFFICE: CONSULTANT DESIGN
SIGNING AND MARKING PLANS
SR 72 ELBERT COUNTY
DRAWING NO. 26-11

VII. DEVELOPMENT PHASE

III. TRAFFIC CONTROL

C. SIGNING AND MARKING

2. Value Engineering Alternative

The placement of advance warning signs is a very important consideration for the safe operation of the roadway. The *MUTCD* requires that warning signs be placed at such a location to allow the motorist to perceive and react to the information. This is called the PIEV time and is described in Section 2C.05 of the *MUTCD*. The proposed plans include the placement of intersection signs with accompanying road name signs in advance of the intersections. These signs are generally placed between 600' and 700' from the intersection. Left turn lanes for divided highways begin some 900' to 1,000' from the intersection due to the use of Type B median crossovers. Since the motorist needs time to perceive and react to the need to change lanes, reduce speed and enter the turn lane, the intersection warning signs should be installed 300' to 500' before the beginning of the left turn lane.

The value engineering study team recommends that the above change be made to the signing and marking plans for project MSL-1226 (200) Elbert County.

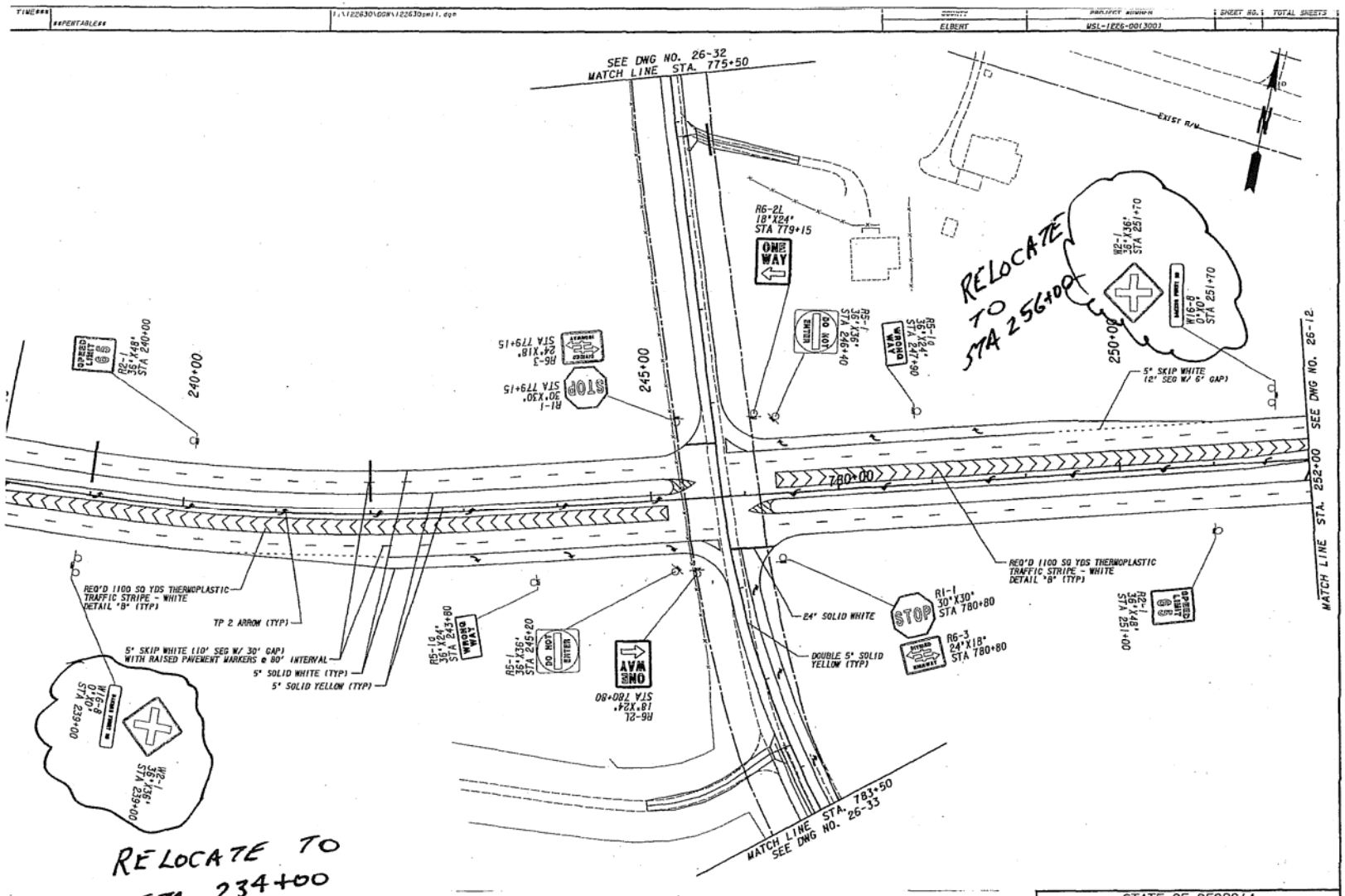

III TRAFFIC CONTROL

INTERSECTION SIGNING

V E ALTERNATIVE

STATE OF GEORGIA
DEPARTMENT OF TRANSPORTATION
OFFICE: CONSULTANT DESIGN
SIGNING AND MARKING PLANS
SR 72 ELBERT COUNTY
DRAWING NO. 26-11

VII. DEVELOPMENT PHASE

IV. CONTRACTOR WORK HOURS

A. CLOSURES

1. "As Proposed"

There were no restrictions presented for lane closures by the consultant. Therefore, any lane closures would be at the contractor's discretion. This would also mean that there are no restrictions on closures for weekends, holidays, etc.

VII. DEVELOPMENT PHASE

IV. CONTRACTOR WORK HOURS

A. CLOSURES

2. Value Engineering Alternative

The study team recommends that restricted work hours be included in this project to limit the times that the contractor can interfere with traffic or have lane closures. These restrictions include no lane closures in the AM peak between 7:00 and 9:00 and also no lane closures in the PM peak between 4:00 and 6:00. There should also be a requirement that there be no work on Saturday, Sunday or holidays.

VII. DEVELOPMENT PHASE

V. CONSTRUCTION TIME

A. LENGTH OF TIME

1. "As Proposed"

There was no length of construction time proposed at the briefing for this project by the consultant.

VII. DEVELOPMENT PHASE

V. CONSTRUCTION TIME

A. LENGTH OF TIME

2. Value Engineering Alternative

During the discussion of the construction of this project it was felt that the bridge over Richard B. Russell Lake would be the controlling factor for this project. The bridge piers will be unusual due to the depth of the water. The length of the bridge will also require a significant amount of time, but could still be finished in slightly less than 24 months. All the other work on the project should be completed at the same time the bridge is being constructed except for the immediate tie-ins. Therefore, it is the recommendation of the study team that the overall project time be 24 months.