ORIGINAL TO GENERAL FILES

DEPARTMENT OF TRANSPORTATION
STATE OF GEORGIA

OFFICE OF DESIGN POLICY & SUPPORT
INTERDEPARTMENTAL CORRESPONDENCE

FILE P.I. # 122260-
EDS00-0545-00(037)
GDOT District 1 - Gainesville
Stephens County
SR 17/SR 17 ALT from CR 24/Scott Road
To CR 190/Memorial Drive

OFFICE Design Policy & Support

DATE May 7, 2012

FROM for Brent Story, State Design Policy Engineer

TO SEE DISTRIBUTION

SUBJECT **APPROVED REVISED CONCEPT REPORT**

Attached is the approved Revised Concept Report for the above subject project.

Attachment

DISTRIBUTION:

Genetha Rice-Singleton, Program Control Administrator
Bobby Hilliard, State Program Delivery Engineer
Cindy VanDyke, State Transportation Planning Administrator
Angela Robinson, Financial Management Administrator
Glenn Bowman, State Environmental Administrator
Kathy Zahul, State Traffic Engineer
Georgene Geary, State Materials & Research Engineer
Lisa Myers, State Project Review Engineer
Jeff Baker, State Utilities Engineer
Ken Thompson, Statewide Location Bureau Chief
Bayne Smith, District Engineer
Robert Mahoney, District Preconstruction Engineer
Allen Ferguson, District Utilities Engineer
Brandon Kirby, Project Manager
BOARD MEMBER - 10th Congressional District

DEPARTMENT OF TRANSPORTATION
STATE OF GEORGIA
REVISED PROJECT CONCEPT REPORT

Project Type:	Rural/Urban Widening	P.I. Number:	122260
GDOT District:	1	County:	Stephens
Federal Route Number:	N/A	State Route Number:	17

The transition limits for different mainline design speeds / typical sections have been revised to reflect Value Engineering Study implementation commitments. The resulting project uses a longer 55 mph raised median section in order to use more of the existing pavement, reduce construction costs and to reduce right of way impacts and costs.

Submitted for approval:

Consultant Designer – ARCADIS US, Inc.	3/1/12 DATE
Bobby Hilliard Office Head – GDOT Office of Program Delivery	3-6-2012 DATE
GDOT Project Manager	3/6/12 DATE

Recommendation for approval:

Glenn Bowman * State Environmental Administrator	3-30-2012 DATE
Ben Rabun * State Bridge Design Engineer	4-17-2012 DATE

The concept as presented herein and submitted for approval is consistent with that which is included in the Regional Transportation Plan (RTP) and/or the State Transportation Improvement Program (STIP).

Cindy VanDyke * State Transportation Planning Administrator	3-29-2012 DATE

* Recommendation on file

PLANNING, APPROVED CONCEPT, & BACKGROUND DATA

Project Justification Statement:

In Stephens County, SR 17 from CR 24/Scott Road to CR 190/Memorial Drive is a north-south route functionally classified as a Rural Principal Arterial and is not listed as a designated bike route in the State Bicycle Plan. The posted speed limit on this roadway is 45 MPH. The proposed project originated via a recommendation from the Director of Preconstruction and was added to the Department's Construction Work Program in 1992 by the SHIP committee. SR 17 is identified as a part of the Governor's Road Improvement Program (GRIP) to address the importance of stimulating economic growth throughout the state via an improved transportation network.

Based upon traffic data information, approved by the Office of Planning, the 2011 Average Annual Daily Traffic (AADT), along SR 17 in the area of this project ranges up to 12,240 AADT, which represents a level-of-service "D". Projected traffic volumes show a corresponding traffic volume range up to 24,420 AADT by the design year 2035 which represents a LOS "E". LOS "D" and "E" ratings are seen as unacceptable with regards to statewide LOS performance measures, as referenced in the 2005 – 2035 Statewide Transportation Plan (SWTP). In addition, analysis of the last three years of available crash data in this area show that the crash rates for this section of SR 17 were above the statewide average for similar classified facilities for two out of three years.

To the north, the project would tie into project 132730, a planned project which also proposes to widen SR 17 to four lanes. To the south, the project would tie into project 122110, which is also a planned project proposed to widen SR 17 to four lanes. Project 122260 is one of the several linked projects along this corridor designed to improve the entirety of the SR 17 corridor through east Georgia. Projects 122260 and 122110 are combined in one environmental document which is approved.

Based on this information, the proposed limits accommodate the primary purpose of this project, as SR 17 was identified and approved for implementation by the Governor and legislature as a GRIP corridor within Stephens County. In addition, P.I. 122260 will address current and future capacity deficiencies as well as potentially reduce crash frequency along the corridor.

Description of the approved concept:

The concept for project EDS00-0545-00(037), approved March 7, 2006, begins at the intersection of CR 24/Scott Road and the existing SR 17. At this location, the roadway will be widened on the east side, holding the existing right-of-way on the west side, to create a four-lane divided roadway with a 44-foot depressed median. The road widening to the east will continue until just north of CR 195/Eastanollee Bypass. The alignment will then shift to the west side of SR 17 to avoid impacting two historical properties and continue to just south of CR 192/Meadowbrook Drive. This alignment will flatten the curve at CR 194/Moore Circle. The alignment will then transition to a rural-divided four-lane roadway with a 20-foot raised median, widening symmetrically about existing SR 17. The typical section then will change to an urban-divided four-lane (20-foot raised median) roadway 1,000 feet south of CR 191/Fieldcrest Road to avoid impacting a historical property on the east side and a church property on the west side. This alignment will flatten the curve at CR 191/Fieldcrest Road and then continue to the project terminus at CR 190/Memorial Drive. The total project length is 3.04 miles.

PDP Classification: ☒ Major ☐ Minor

Federal Oversight: ☐ Full Oversight ☒ Exempt ☐ State Funded ☐ Other

Projected Traffic ADT as shown in the approved Concept Report:
Open Year (1997): 12,850 vpd Design Year (2017): 21,150 vpd

Updated Traffic ADT:
Open Year (2015): 13,380 vpd Design Year (2035): 19,860 vpd

Functional Classification (Mainline): Rural Principal Arterial

VE Study anticipated: ☐ No ☐ Yes ☒ Completed – Date: 6/28/2007
If VE Study has been completed, attach VE Implementation letter.

PROPOSED REVISIONS

Approved Features:	Proposed Features:
The approved concept report utilizes a four-lane, 44-foot depressed median from the beginning of the project to just south of CR 192/Meadowbrook Drive. This portion of the proposed corridor makes use of a 65 mph design speed. A transitional zone with design speed of 55 mph and a 20-foot raised median runs to approximately 1,000 feet south of CR 191/Fieldcrest Road. After this location it transitions into an 45 mph design speed urban-divided four lane typical section with a 20-foot raised median. The approved concept also employs symmetrical widening beyond the CR 192/Meadowbrook Drive intersection.	The revised concept report proposes that the beginning of the 55 mph design speed along with the 20-foot raised median section begin at the intersection of CR 198/Eastanollee Road. This shift will lengthen the portion of the project that utilizes a 55 mph speed design by 1.64 miles. The revised concept report also proposes a shift in the project alignment beyond the CR 192/Meadowbrook Drive intersection that will make it possible to retain existing pavement along the eastern side of the alignment while using full depth widening on the western side of the alignment.
Reason(s) for change: By narrowing the 44-foot depressed median to a 20-foot raised median closer to the beginning of the project, right of way impacts and right of way costs can be minimized throughout the project. Furthermore, when this is combined with the shift in the alignment toward the end of the project, it is possible to avoid and minimize impacts to certain historic properties. By utilizing the existing pavement beyond the CR 192/Meadowbrook Drive intersection, construction costs will also be reduced. Additional construction cost savings will be gained at the Oggs Branch Bridge and the Eastanollee Creek Bridge where independent bridges would have been required for each side of the road. The narrower typical section in these locations uses single bridge decks and also results in overall smaller deck areas.	

ENVIRONMENTAL

Air Quality:

Is the project located in a PM 2.5 Non-attainment area? ☒ No ☐ Yes
Is the project located in an Ozone Non-attainment area? ☒ No ☐ Yes

Potential environmental impacts of proposed revision:

Reduction in project's typical section and slight alignment shifts would reduce impacts to historic resources, churches and institutions, and waters of the U.S. However, as a result of more accurate delineation methodology for waters of the U.S., greater stream impacts are now being reported. A new Section 404 Individual Permit (IP) will need to be obtained from the U.S. Army Corps of Engineers as a result of changes in impacts to waters of the U.S. and because the existing IP is set to expire on April 30, 2012. Acquisition of this IP will affect the environmental schedule.

Have proposed revisions been reviewed by environmental staff? ☐ No ☒ Yes

Environmental responsibilities (Studies/Documents/Permits):

Consultant is responsible on behalf of GDOT.

Environmental impacts by section:

NEPA: *The environmental document will need to be reevaluated due to the proposed concept changes. This process is underway.*

Ecology: *There is no change in impacts due to the VE recommendation implementation. No impacts to protected species or their habitats are anticipated. Seasonal surveys have been conducted, and no additional surveys are required. A new Section 404 Individual Permit (IP) will need to be obtained from the U.S. Army Corps of Engineers as a result of changes in impacts to waters of the U.S. and because the existing IP is set to expire on April 30, 2012.*

Archeology: *Design changes necessitated the completion of a Phase I Archaeological Survey in the areas of change. One resource of unknown eligibility was found; however, as currently designed, the project would not affect the potentially eligible portion of the resource.*

History: *Changes in driveway easements on one historic property will occur as a result of these design changes. Since right-of-way has been authorized, no additional historic resources survey is required.*

Air & Noise: *Due to revised traffic volumes and changes in regulations, Air Quality and Noise Impact Assessments, including modeling, have been completed for the project revisions. Although noise impacts were identified, noise abatement measures were determined to not be feasible.*

Public Involvement: *A Public Information Open House was held on July 14, 2011 for the proposed revisions. No major comments were received.*

PROJECT COST & ADDITIONAL INFORMATION

Updated Cost Estimate		Date of Estimate
Base Construction Cost:	$18,959,738.64	4/4/2011
Engineering and Insp (5%):	$914,801.50	6/28/2011
Liquid AC Adjustment:	$3,793,764.24	6/28/2011
Total Construction Cost:	$23,668,304.38	6/28/2011
Right-of-Way:	$20,243,300.01	6/28/2011
Utilities (reimbursable costs):	$2,547,960.00	3/13/2012
Environmental Mitigation:	$459,930.75	3/15/2012
TOTAL PROJECT COST:	**$46,919,495.14**	**4/4/2012**

Recommendation: Recommend that the proposed revision to the concept be approved for implementation.

Comments: A Design Variance is required and will be requested for the use of a 20' concrete median.

Attachments:

1. Sketch map
2. Revised Typical Sections
3. Cost Estimate(s)
4. V.E. Implementation Letter
5. Bridge Inventory Sheets for Oggs Branch Creek and Eastanollee Creek

APPROVALS

Concur: _____
Director of Engineering

Approve: _____ 5/3/2012
Chief Engineer

Attachment 1
Sketch Map

SR 17 - EDS 545 (37)
Stephens County, P.I.No. 122260

(Project Location Map)

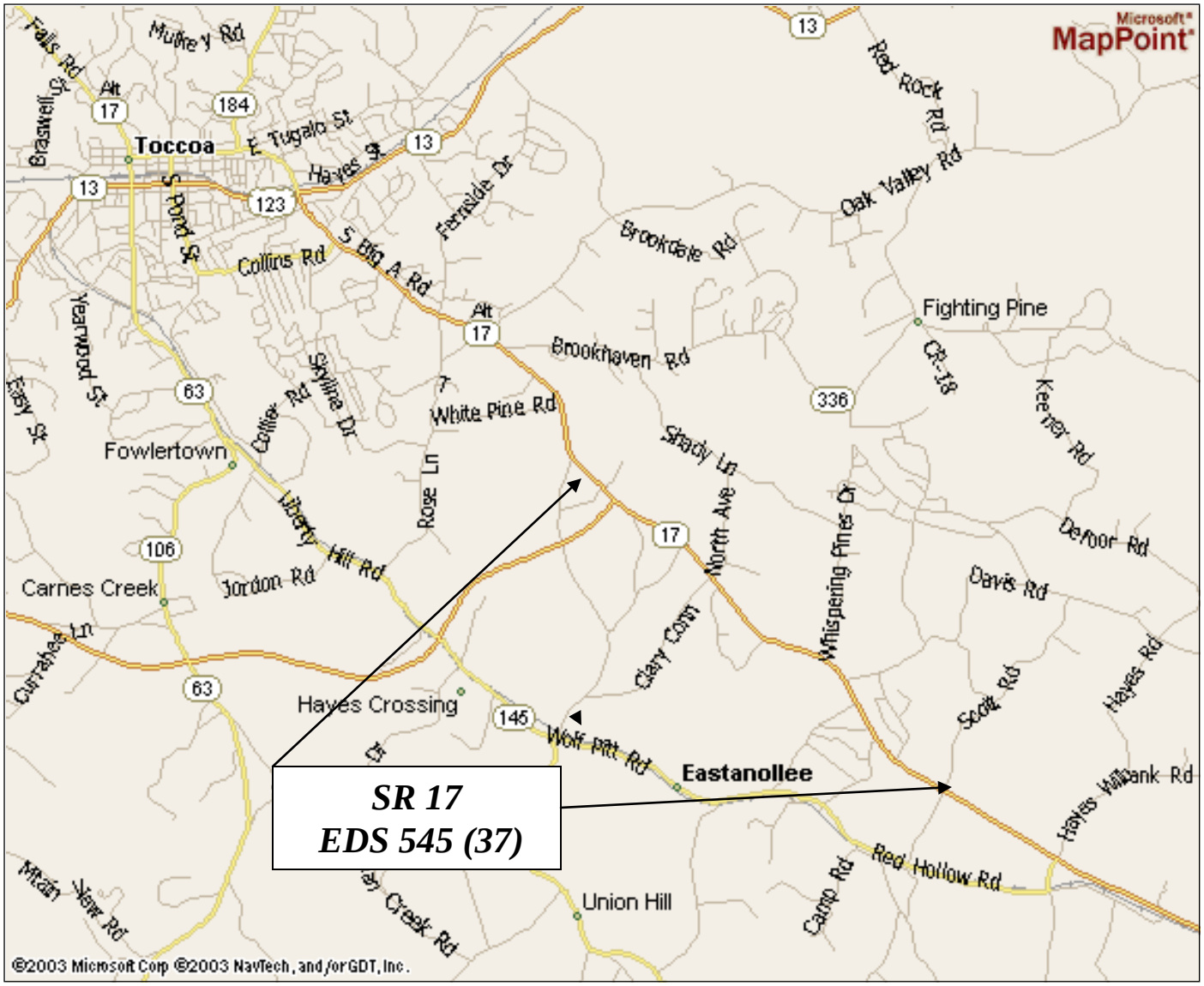

Attachment 2

Revised Typical Sections

STATE	PROJECT NUMBER	SHEET NO.	TOTAL SHEETS
GA.	EDS00-0545-00(037)		1046

* 15'-6" WITH GUARDRAIL
(SEE DWG. NO. 5-13 FOR GUARDRAIL DETAIL)

** SEE CONSTRUCTION DETAIL D-42 FOR RUMBLE STRIP DETAIL

\#\# 17'-6" WITH GUARDRAIL

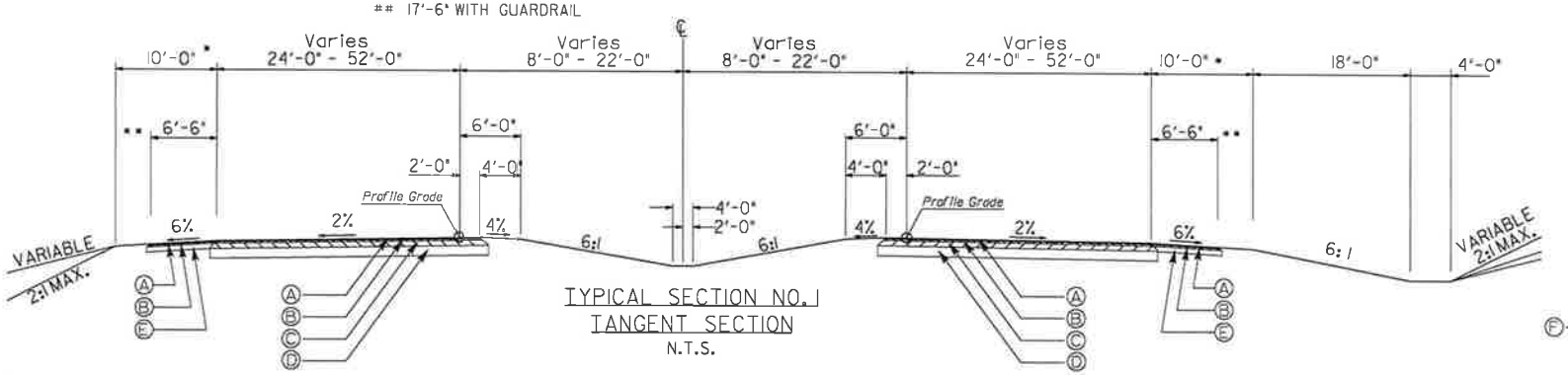

TYPICAL SECTION NO. 1
TANGENT SECTION
N.T.S.

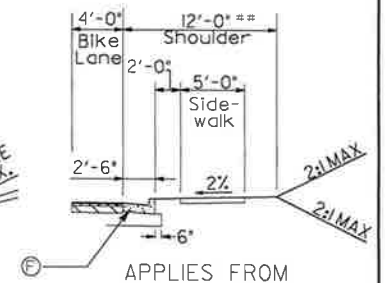

APPLIES FROM
STA 407+05.97
TO
STA 408+12.00 RT

USE WITH TYPICAL SECTION NO.1
SR 17
STA. 396+50.00 To 408+12.00

REQUIRED PAVEMENT

- (A) 165 LB/SY RECYCLED ASPH CONC 12.5 MM SUPERPAVE, GP 2 ONLY, INCL BITUM MATL & H LIME
- (B) 220 LB/SY RECYCLED ASPH CONC 19 MM SUPERPAVE, GP 1 OR 2, INCL BITUM MATL & H LIME
- (C) 880 LB/SY RECYCLED ASPH CONC 25 MM SUPERPAVE, GP 1 OR 2, INCL BITUM MATL & H LIME
- (D) 12" GRADED AGGREGATE BASE
- (E) 20" GRADED AGGREGATE BASE

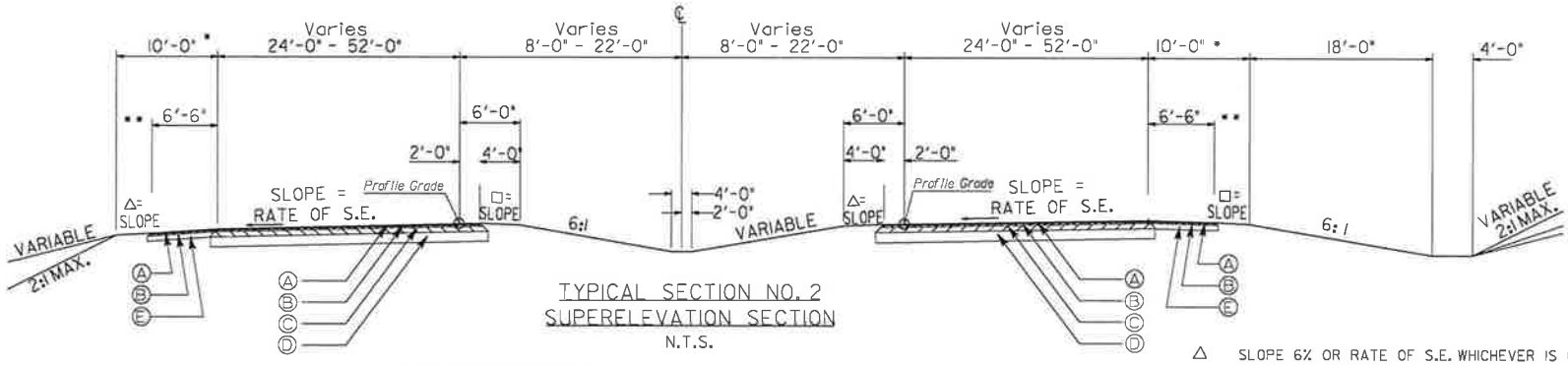

TYPICAL SECTION NO. 2
SUPERELEVATION SECTION
N.T.S.

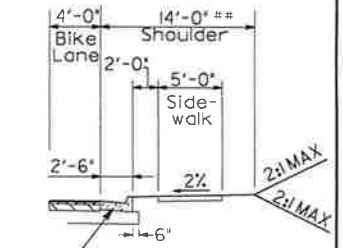

APPLIES FROM
STA 408+12.00 RT
TO
STA 412+30.88

USE WITH TYPICAL SECTION NO.2
SR 17
STA. 408+12.00 To 423+50.00

* 15'-6" WITH GUARDRAIL
(SEE DWG. NO. 5-13 FOR GUARDRAIL DETAIL)

** SEE CONSTRUCTION DETAIL D-42 FOR RUMBLE STRIP DETAIL

\#\# 17'-6" WITH GUARDRAIL

Δ SLOPE 6% OR RATE OF S.E. WHICHEVER IS GREATER

□ SLOPE AS FOLLOWS:
S.E RATE OF 3% OR LESS, USE 5%
S.E. RATE OF 4% OR LESS, USE 4%
S.E. RATE OF 5% OR LESS, USE 3%
S.E. RATE OF 6% OR LESS, USE 2%

ALGEBRAIC DIFFERENCE IN PAVING AND SHOULDER SLOPES NOT To EXCEED 8%

ARCADIS
Infrastructure · Water · Environment · Buildings

REVISION DATES		

GEORGIA
DEPARTMENT OF TRANSPORTATION
TYPICAL SECTION
PROJECT EDS00-0545-00(037)
COUNTY STEPHENS

DRAWING NO. 5-01

Date: 3/19/2012 User Name: jlangley Job Name: 63285 Time: 1:59:48 PM Filename: G:\TRANS\285\V-dgn\122\G01V0.dgn PLOT DRIVER: ustm.pgnseng

STATE	PROJECT NUMBER	SHEET NO.	TOTAL SHEETS
GA.	EDS00-0545-00(037)		1046

USE WITH TYPICAL SECTION NO.3
SR 17
STA. 424+47.00 To 436+91.00
STA. 466+11.00 To 469+04.00
STA. 484+25.00 To 485+00.00

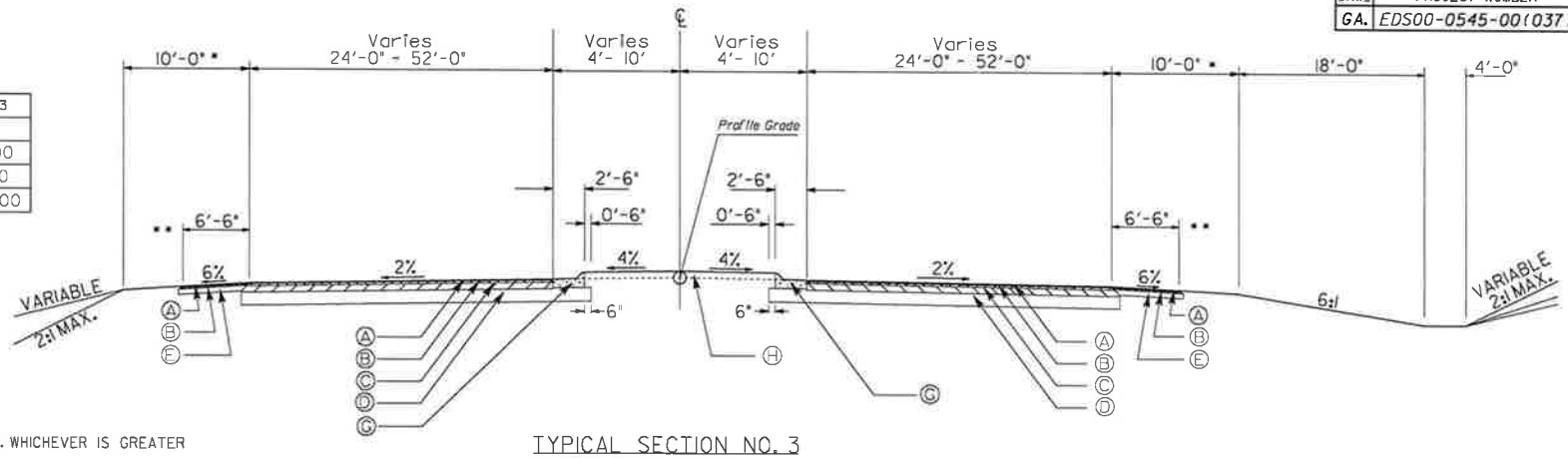

△ SLOPE 6% OR RATE OF S.E. WHICHEVER IS GREATER

□ SLOPE AS FOLLOWS:
S.E RATE OF 3% OR LESS, USE 5%
S.E. RATE OF 4% OR LESS, USE 4%
S.E. RATE OF 5% OR LESS, USE 3%
S.E. RATE OF 6% OR LESS, USE 2%

ALGEBRAIC DIFFERENCE IN PAVING AND SHOULDER SLOPES NOT To EXCEED 8%

* 15'-6" WITH GUARDRAIL (SEE SHEET 5-13 FOR GUARDRAIL DETAIL)

*** 13'-6" WITH GUARDRAIL (SEE SHEET 5-13 FOR GUARDRAIL DETAIL)

TYPICAL SECTION NO. 3
TANGENT SECTION
N.T.S.

REQUIRED PAVEMENT

Ⓐ 165 LB/SY RECYCLED ASPH CONC 12.5 MM SUPERPAVE, GP 2 ONLY, INCL BITUM MATL & H LIME

Ⓑ 220 LB/SY RECYCLED ASPH CONC 19 MM SUPERPAVE, GP 1 OR 2, INCL BITUM MATL & H LIME

Ⓒ 880 LB/SY RECYCLED ASPH CONC 25 MM SUPERPAVE, GP 1 OR 2, INCL BITUM MATL & H LIME

Ⓓ 12" GRADED AGGREGATE BASE

Ⓔ 20" GRADED AGGREGATE BASE

Ⓖ 8" X 30" CONC. CURB & GUTTER, TP 7

Ⓗ 4" CONCRETE MEDIAN (USE WHERE MEDIAN IS LESS THAN 10' WIDE)

USE WITH TYPICAL SECTION NO.4
SR 17
STA. 423+50.00 To 424+47.00
STA. 436+91.00 To 466+11.00
STA. 469+04.00 To 484+25.00

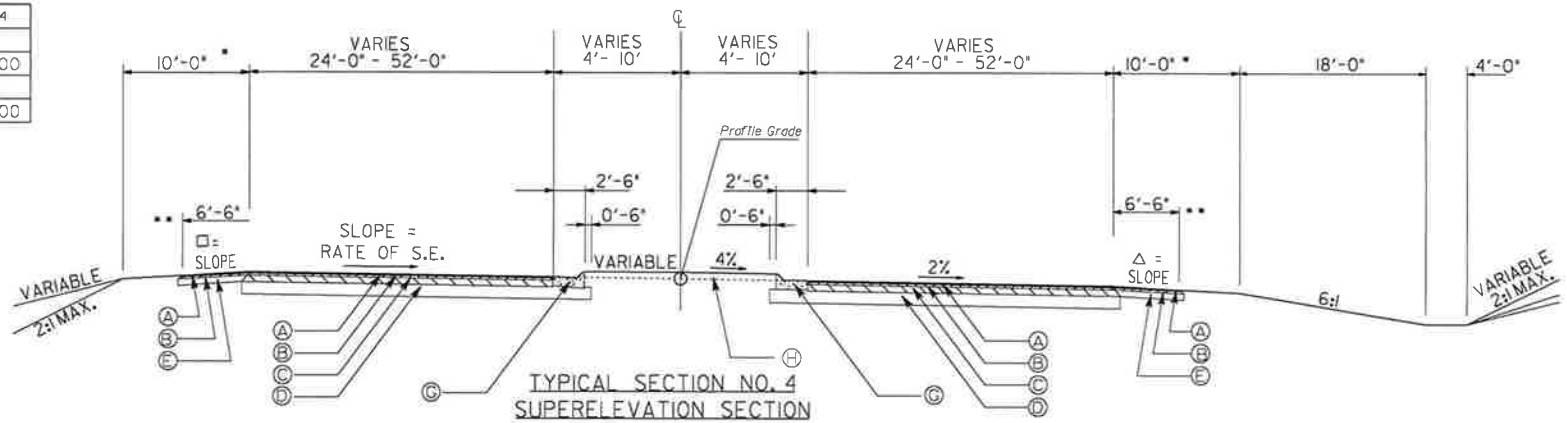

TYPICAL SECTION NO. 4
SUPERELEVATION SECTION
N.T.S.

ARCADIS
Infrastructure · Water · Environment · Buildings

REVISION DATES		

GEORGIA
DEPARTMENT OF TRANSPORTATION
TYPICAL SECTION
PROJECT EDS00-0545-00(037)
COUNTY STEPHENS

DRAWING NO. 5-02

Date: 3/8/02 User Name: jlongley Job Name: 63285 Time: 1:59:48 PM Filename: G:\TRANS\3285\rdy\022501YD.dgn PLOT DRIVER: usln_ogmong

STATE	PROJECT NUMBER	SHEET NO.	TOTAL SHEETS
GA.	EDS00-0545-00(037)		1046

USE WITH TYPICAL SECTION NO.5
SR 17
STA. 485+00.00 To 512+90.00

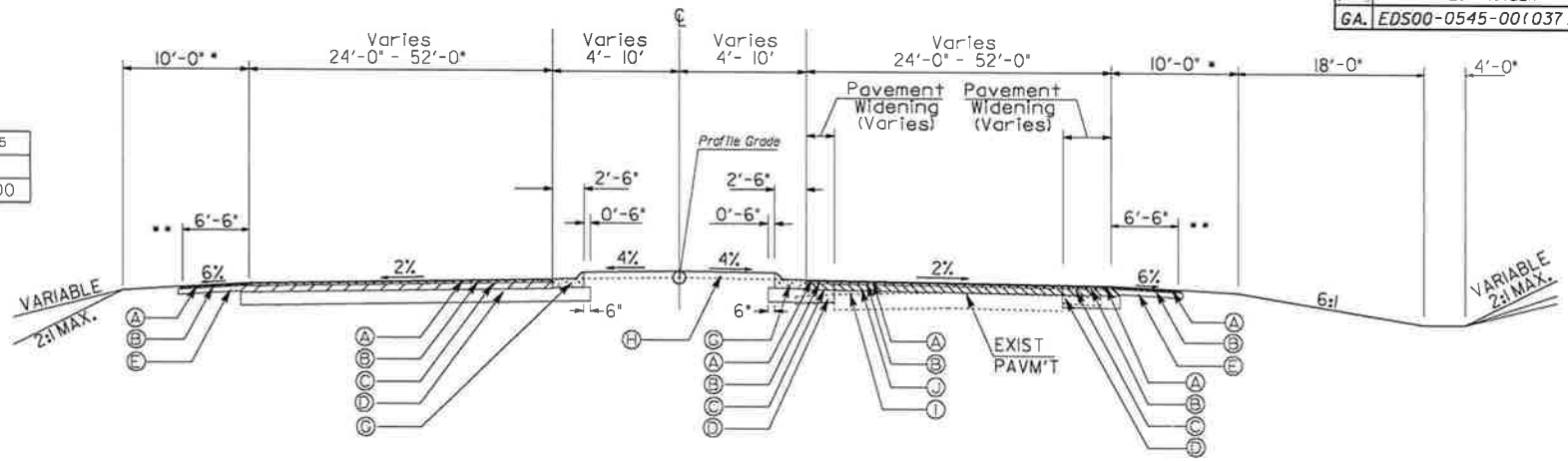

△ SLOPE 6% OR RATE OF S.E. WHICHEVER IS GREATER

□ SLOPE AS FOLLOWS:
S.E RATE OF 3% OR LESS, USE 5%
S.E. RATE OF 4% OR LESS, USE 4%
S.E. RATE OF 5% OR LESS, USE 3%
S.E. RATE OF 6% OR LESS, USE 2%

ALGEBRAIC DIFFERENCE IN PAVING AND SHOULDER SLOPES NOT To EXCEED 8%

* 15'-6" WITH GUARDRAIL (SEE SHEET 5-13 FOR GUARDRAIL DETAIL)

*** 13'-6" WITH GUARDRAIL (SEE SHEET 5-13 FOR GUARDRAIL DETAIL)

TYPICAL SECTION NO. 5
TANGENT SECTION
N.T.S.

REQUIRED PAVEMENT

- (A) 165 LB/SY RECYCLED ASPH CONC 12.5 MM SUPERPAVE, GP 2 ONLY, INCL BITUM MATL & H LIME
- (B) 220 LB/SY RECYCLED ASPH CONC 19 MM SUPERPAVE, GP 1 OR 2, INCL BITUM MATL & H LIME
- (C) 880 LB/SY RECYCLED ASPH CONC 25 MM SUPERPAVE, GP 1 OR 2, INCL BITUM MATL & H LIME
- (D) 12" GRADED AGGREGATE BASE
- (E) 20" GRADED AGGREGATE BASE
- (G) 8" X 30" CONC. CURB & GUTTER, TP 7
- (H) 4" CONCRETE MEDIAN (USE WHERE MEDIAN IS LESS THAN 10' WIDE)
- (I) ASPHALT CONC. LEVELLING
- (J) 330 LB/SY RECYCLED ASPH CONC 25 MM SUPERPAVE, GP 1 OR 2, INCL BITUM MATL & H LIME

USE WITH TYPICAL SECTION NO.6
SR 17
STA. 512+90.00 To 526+56.37

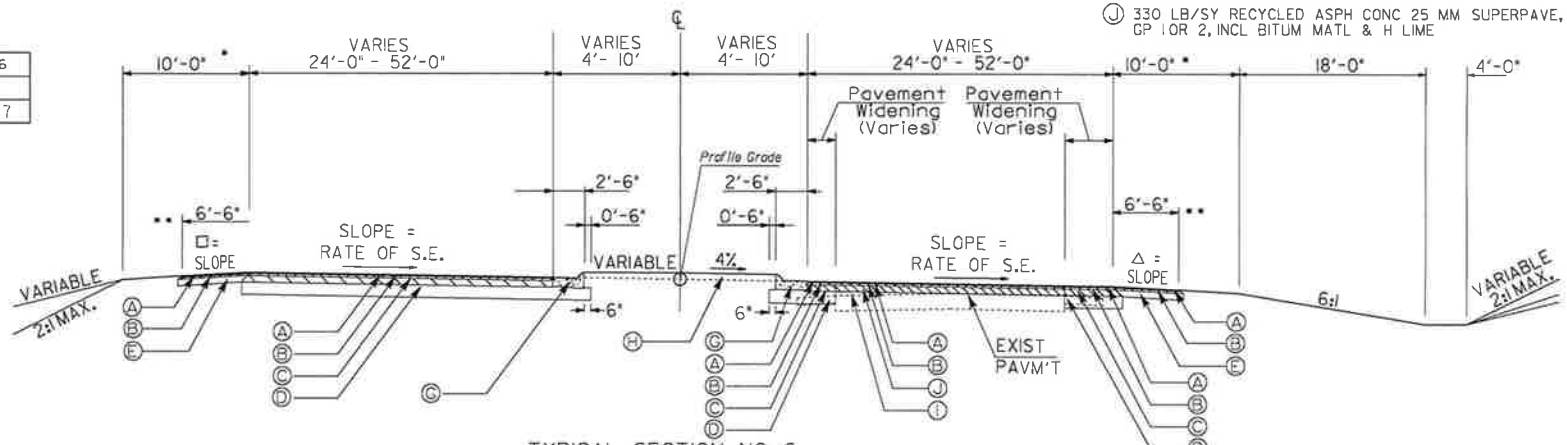

TYPICAL SECTION NO. 6
SUPERELEVATION SECTION
N.T.S.

ARCADIS
Infrastructure · Water · Environment · Buildings

REVISION DATES

GEORGIA
DEPARTMENT OF TRANSPORTATION
TYPICAL SECTION
PROJECT EDS00-0545-00(037)
COUNTY STEPHENS

DRAWING NO. 5-03

Date: 3/15/2012 User Name: jlongley Job Name: 63285 Time: 1:59:48 PM Filename: C:\TRA\63285\r-dy\12260170.dgn PLOT DRIVER: ustn.pgnsing

STATE	PROJECT NUMBER	SHEET NO.	TOTAL SHEETS
GA.	EDS00-0545-00(037)		1046

USE WITH TYPICAL SECTION NO.7
SR 17
STA. 529+08.00 To 536+18.00
STA. 543+07.00 To 544+50.00

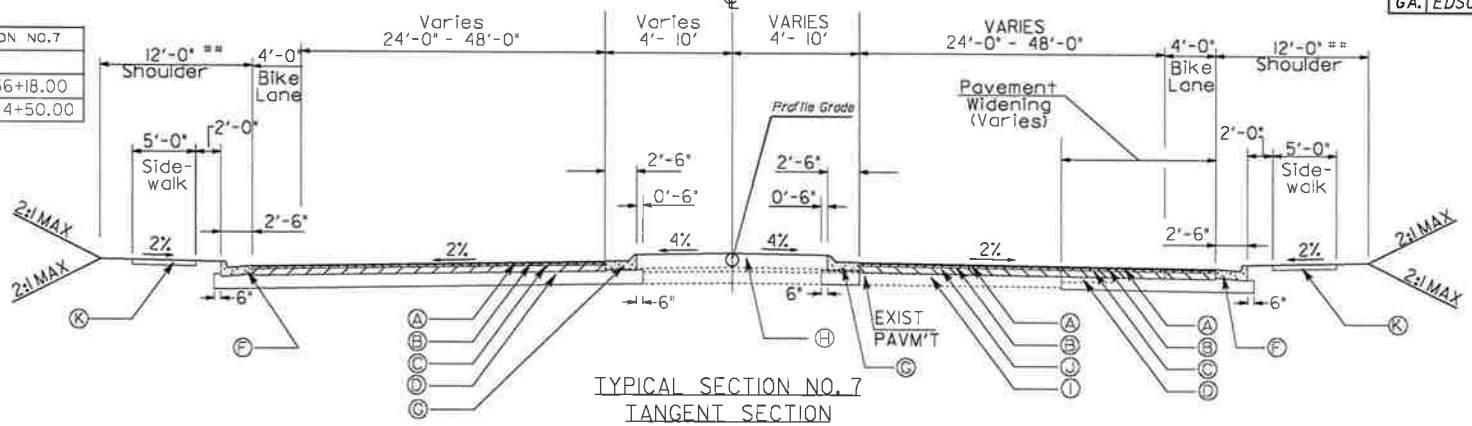

TYPICAL SECTION NO. 7
TANGENT SECTION
N.T.S.

REQUIRED PAVEMENT

- (A) 165 LB/SY RECYCLED ASPH CONC 12.5 MM SUPERPAVE, GP 2 ONLY, INCL BITUM MATL & H LIME
- (B) 220 LB/SY RECYCLED ASPH CONC 19 MM SUPERPAVE, GP 1 OR 2, INCL BITUM MATL & H LIME
- (C) 880 LB/SY RECYCLED ASPH CONC 25 MM SUPERPAVE, GP 1 OR 2, INCL BITUM MATL & H LIME
- (D) 12" GRADED AGGREGATE BASE
- (F) 8" X 30" CONC. CURB & GUTTER, TP 2
- (G) 8" X 30" CONC. CURB & GUTTER, TP 7
- (H) 4" CONCRETE MEDIAN (USE WHERE MEDIAN IS LESS THAN 10' WIDE)
- (I) ASPHALT CONC. LEVELLING
- (J) 330 LB/SY RECYCLED ASPH CONC 25 MM SUPERPAVE, GP 1 OR 2, INCL BITUM MATL & H LIME
- (K) 4" CONC. SIDEWALK

△ SLOPE 6% OR RATE OF S.E. WHICHEVER IS GREATER

□ SLOPE AS FOLLOWS:
S.E RATE OF 3% OR LESS, USE 5%
S.E. RATE OF 4% OR LESS, USE 4%
S.E. RATE OF 5% OR LESS, USE 3%
S.E. RATE OF 6% OR LESS, USE 2%

ALGEBRAIC DIFFERENCE IN PAVING AND SHOULDER SLOPES NOT To EXCEED 8%

* 15'-6" WITH GUARDRAIL
(SEE DWG. NO. 5-13 FOR GUARDRAIL DETAIL)

** SEE CONSTRUCTION DETAIL D-42 FOR RUMBLE STRIP DETAIL

\#\# 17'-6" WITH GUARDRAIL

USE WITH TYPICAL SECTION NO.8
SR 17
STA. 526+56.37 To 529+08.00
STA. 536+18.00 To 543+07.00

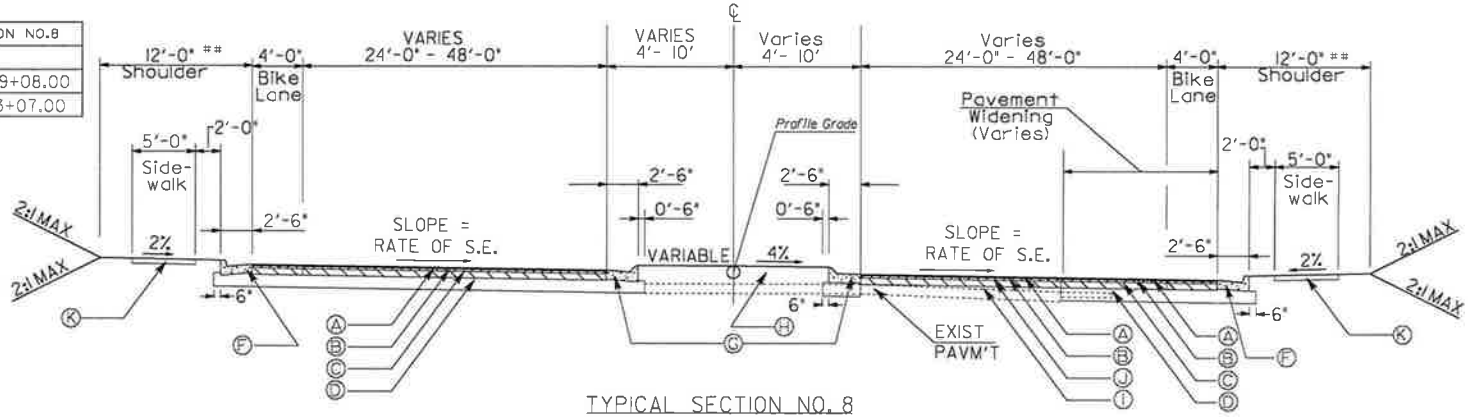

TYPICAL SECTION NO. 8
SUPERELEVATION SECTION
N.T.S.

ARCADIS
Infrastructure · Water · Environment · Buildings

REVISION DATES		

GEORGIA
DEPARTMENT OF TRANSPORTATION
TYPICAL SECTION
PROJECT EDS00-0545-00(037)
COUNTY STEPHENS

DRAWING NO. 5-04

Date: 3/19/2012 User Name: jbongay Job Name: 63285 Time: 1:59:48 PM Filename: G:\TRANS\3285\r-dy\0225601T0L.dgn PLOT DRIVER: ustn_ogndwg

STATE	PROJECT NUMBER	SHEET NO.	TOTAL SHEETS
GA.	EDS00-0545-00(037)		1046

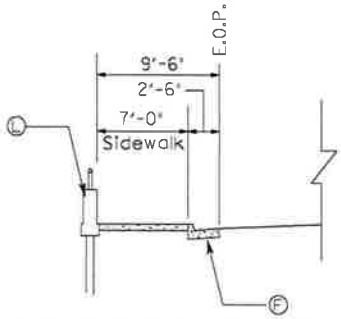

APPLIES FROM STA 546+49.31
TO STA 549+50 LT

USE WITH TYPICAL SECTION NO.9
SR 17
STA. 544+50.00 To 558+96.00

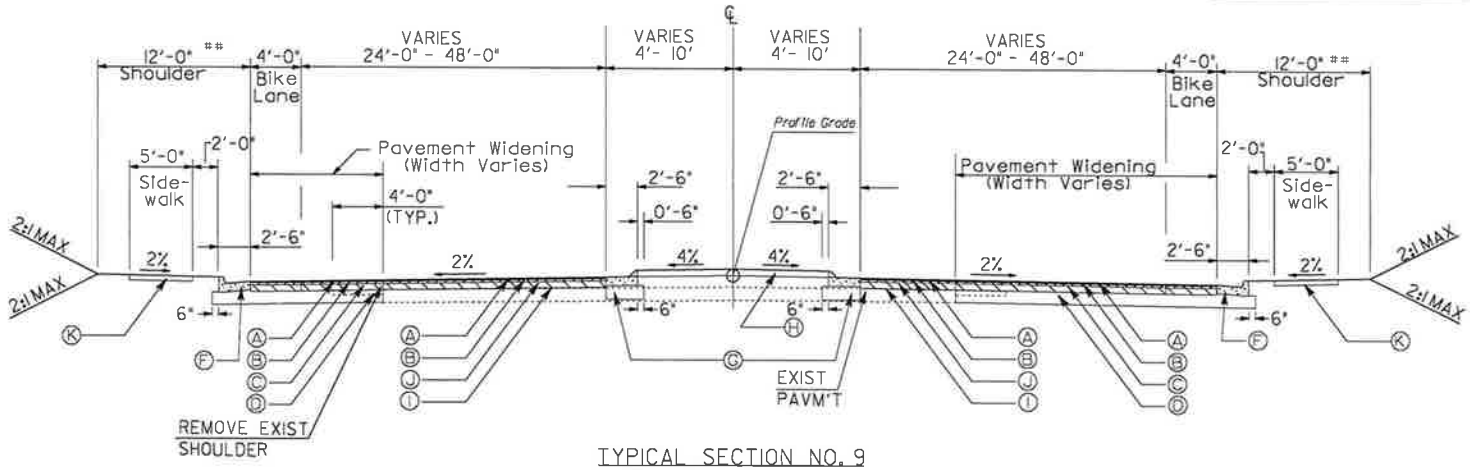

TYPICAL SECTION NO. 9
TANGENT SECTION
N.T.S.

REQUIRED PAVEMENT

- (A) 165 LB/SY RECYCLED ASPH CONC 12.5 MM SUPERPAVE, GP 2 ONLY, INCL BITUM MATL & H LIME
- (B) 220 LB/SY RECYCLED ASPH CONC 19 MM SUPERPAVE, GP 1 OR 2, INCL BITUM MATL & H LIME
- (C) 880 LB/SY RECYCLED ASPH CONC 25 MM SUPERPAVE, GP 1 OR 2, INCL BITUM MATL & H LIME
- (D) 12" GRADED AGGREGATE BASE
- (F) 8" X 30" CONC. CURB & GUTTER, TP 2
- (G) 8" X 30" CONC. CURB & GUTTER, TP 7
- (H) 4" CONCRETE MEDIAN (USE WHERE MEDIAN IS LESS THAN 10' WIDE)
- (I) ASPHALT CONC. LEVELLING
- (J) 330 LB/SY RECYCLED ASPH CONC 25 MM SUPERPAVE, GP 1 OR 2, INCL BITUM MATL & H LIME
- (K) 4" CONC. SIDEWALK
- (L) MSE WALL (SEE WALL PLANS)

△ SLOPE 6% OR RATE OF S.E. WHICHEVER IS GREATER

□ SLOPE AS FOLLOWS:
S.E RATE OF 3% OR LESS, USE 5%
S.E. RATE OF 4% OR LESS, USE 4%
S.E. RATE OF 5% OR LESS, USE 3%
S.E. RATE OF 6% OR LESS, USE 2%

ALGEBRAIC DIFFERENCE IN PAVING AND SHOULDER SLOPES NOT To EXCEED 8%

* 15'-6" WITH GUARDRAIL
(SEE DWG. NO. 5-13 FOR GUARDRAIL DETAIL)

** SEE CONSTRUCTION DETAIL D-42 FOR RUMBLE STRIP DETAIL

17'-6" WITH GUARDRAIL

ARCADIS
Infrastructure · Water · Environment · Buildings

REVISION DATES		

GEORGIA
DEPARTMENT OF TRANSPORTATION
TYPICAL SECTION
PROJECT EDS00-0545-00(037)
COUNTY STEPHENS

DRAWING NO. 5-05

Date: 3/19/2002 User Name: jlongley Job Name: 63285 Time: 1:55:48 PM Filename: G:\TRA\63285\rdy\22250TYO.dgn PLOT DRIVER: ustn.pgnewg

STATE	PROJECT NUMBER	SHEET NO.	TOTAL SHEETS
GA.	EDS00-0545-00(037)		1046

USE WITH TYPICAL SECTION NO.10
SR 17
STA. 558+96.00 To 560+46.00

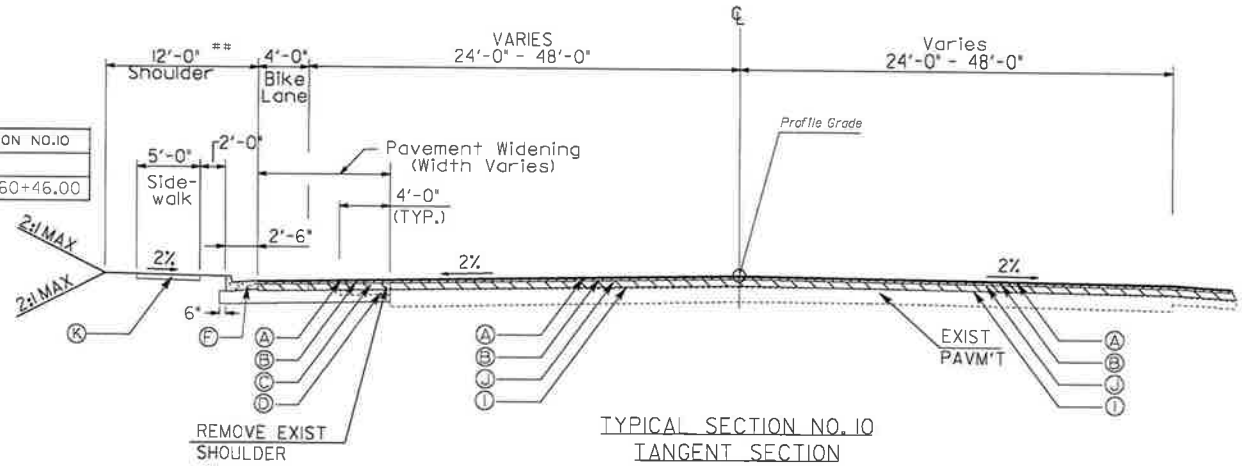

TYPICAL SECTION NO. 10
TANGENT SECTION
N.T.S.

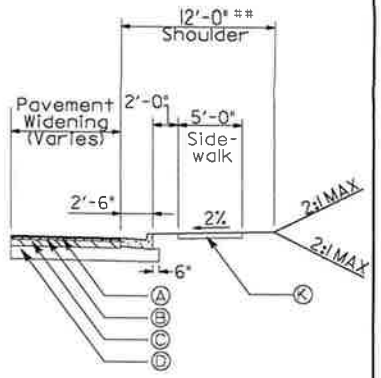

APPLIES FROM
STA 558+96.00 RT
TO
STA 560+20.00 RT

REQUIRED PAVEMENT

- (A) 165 LB/SY RECYCLED ASPH CONC 12.5 MM SUPERPAVE, GP 2 ONLY, INCL BITUM MATL & H LIME
- (B) 220 LB/SY RECYCLED ASPH CONC 19 MM SUPERPAVE, GP 1 OR 2, INCL BITUM MATL & H LIME
- (C) 880 LB/SY RECYCLED ASPH CONC 25 MM SUPERPAVE, GP 1 OR 2, INCL BITUM MATL & H LIME
- (D) 12" GRADED AGGREGATE BASE
- (F) 8" X 30" CONC. CURB & GUTTER, TP 2
- (I) ASPHALT CONC. LEVELLING
- (J) 330 LB/SY RECYCLED ASPH CONC 25 MM SUPERPAVE, GP 1 OR 2, INCL BITUM MATL & H LIME
- (K) 4" CONC. SIDEWALK

△ SLOPE 6% OR RATE OF S.E. WHICHEVER IS GREATER

□ SLOPE AS FOLLOWS:
S.E RATE OF 3% OR LESS, USE 5%
S.E. RATE OF 4% OR LESS, USE 4%
S.E. RATE OF 5% OR LESS, USE 3%
S.E. RATE OF 6% OR LESS, USE 2%

ALGEBRAIC DIFFERENCE IN PAVING AND SHOULDER SLOPES NOT To EXCEED 8%

* 15'-6" WITH GUARDRAIL (SEE DWG. NO. 5-13 FOR GUARDRAIL DETAIL)

** SEE CONSTRUCTION DETAIL D-42 FOR RUMBLE STRIP DETAIL

17'-6" WITH GUARDRAIL

USE WITH TYPICAL SECTION NO.11
SR 17
STA. 560+46.00 To 565+20.00

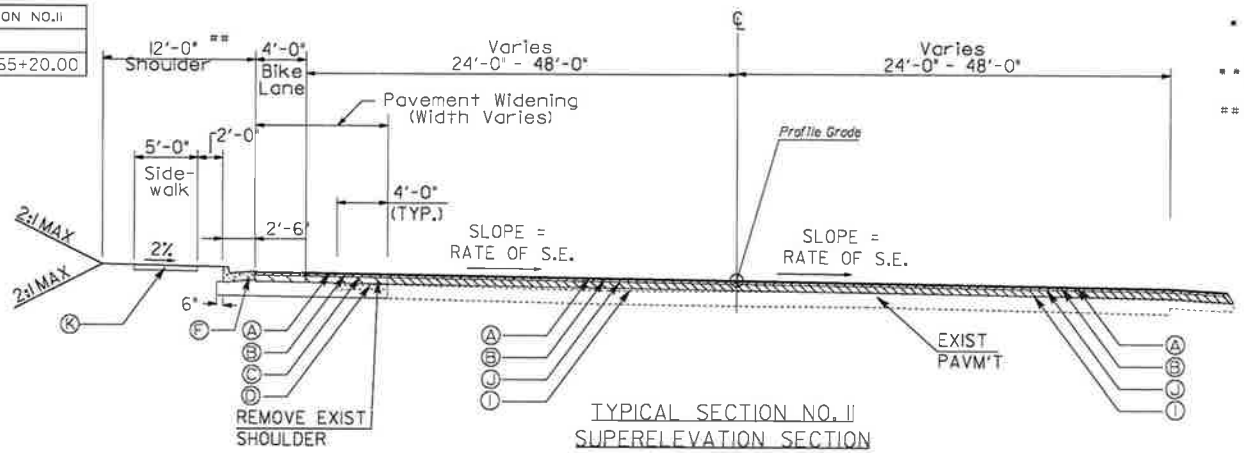

TYPICAL SECTION NO. 11
SUPERELEVATION SECTION
N.T.S.

ARCADIS
Infrastructure · Water · Environment · Buildings

REVISION DATES

GEORGIA
DEPARTMENT OF TRANSPORTATION
TYPICAL SECTION
PROJECT EDS00-0545-00(037)
COUNTY STEPHENS

DRAWING NO. 5-06

Date: 3/19/2012 User Name: jjongley Job Name: 63285 Time: 6:59:18 PM Filename: G:\TRA\63285\rdy\122260170.dgn PLOT DRIVER: ustm_ogmeng

STATE	PROJECT NUMBER	SHEET NO.	TOTAL SHEETS
GA.	EDS00-0545-00(037)		1046

* 15'-6" WITH GUARDRAIL
(SEE SHEET 5-13 FOR GUARDRAIL DETAIL)

*** 13'-6" WITH GUARDRAIL
(SEE SHEET 5-13 FOR GUARDRAIL DETAIL)

USE WITH TYPICAL SECTION NO 12	
ROAD	STATION RANGE
CR 198	STA. 13+50.00 To 15+13.00
CR 195	STA. 15+50.00 To 19+54.00
CR 4	STA. 20+62.00 To 22+50.00
CR 192	STA. 17+00.00 To 17+20.00
CR 642	STA. 18+74.00 To 19+65.00

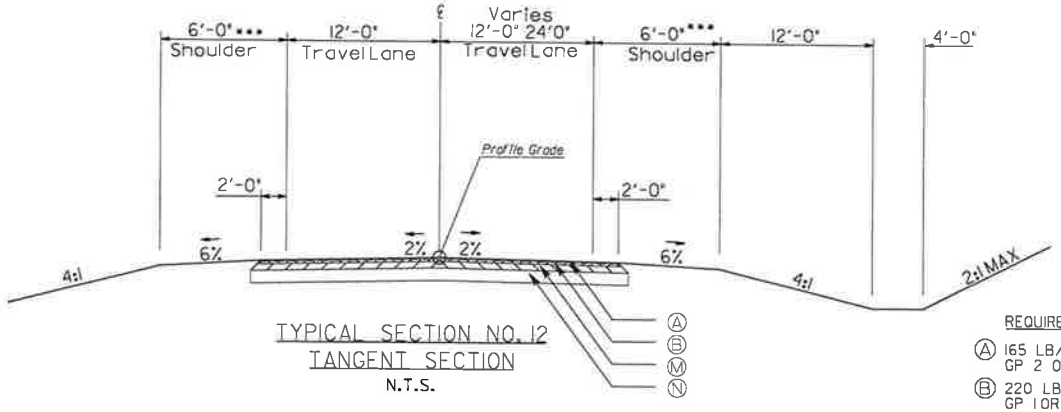

TYPICAL SECTION NO. 12
TANGENT SECTION
N.T.S.

REQUIRED PAVEMENT

Ⓐ 165 LB/SY RECYCLED ASPH CONC 12.5 MM SUPERPAVE, GP 2 ONLY, INCL BITUM MATL & H LIME

Ⓑ 220 LB/SY RECYCLED ASPH CONC 19 MM SUPERPAVE, GP 1 OR 2, INCL BITUM MATL & H LIME

Ⓜ 550 LB/SY RECYCLED ASPH CONC 25 MM SUPERPAVE, GP 1 OR 2, INCL BITUM MATL & H LIME

Ⓝ 10" GRADED AGGREGATE BASE

USE WITH TYPICAL SECTION NO 13	
ROAD	STATION RANGE
CR 198	STA. 15+13.00 To 19+38.00
CR 11	STA. 20+47.00 To 24+35.00
CR 194	STA. 17+00.00 To 19+45.00
CR 192	STA. 17+20.00 To 19+65.00

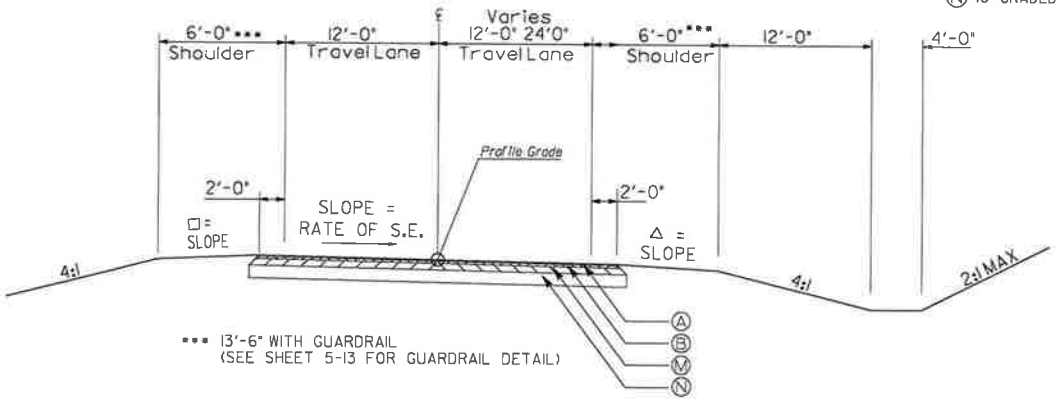

*** 13'-6" WITH GUARDRAIL
(SEE SHEET 5-13 FOR GUARDRAIL DETAIL)

△ SLOPE 6% OR RATE OF S.E. WHICHEVER IS GREATER

□ SLOPE AS FOLLOWS:
S.E RATE OF 3% OR LESS, USE 5%
S.E. RATE OF 4% OR LESS, USE 4%
S.E. RATE OF 5% OR LESS, USE 3%
S.E. RATE OF 6% OR LESS, USE 2%

ALGEBRAIC DIFFERENCE IN PAVING AND SHOULDER SLOPES NOT To EXCEED 8%

TYPICAL SECTION NO. 13
SUPER ELEVATED SECTION
N.T.S.

ARCADIS
Infrastructure · Water · Environment · Buildings

REVISION DATES

GEORGIA
DEPARTMENT OF TRANSPORTATION
TYPICAL SECTION
PROJECT EDS00-0545-00(037)
COUNTY STEPHENS

DRAWING NO. 5-07

Date: 3/19/2012 User Name: jbongley Job Name: 63285 Time: 1:59:48 PM Filename: G:\TRA\63285\rdy\12250170L.dgn PLOT DRIVER: ustn.pgnerg

STATE	PROJECT NUMBER	SHEET NO.	TOTAL SHEETS
GA.	EDS00-0545-00(037)		1046

USE WITH TYPICAL SECTION NO 14	
ROAD	STATION RANGE
CR 191	STA. 15+62.44 To 19+46.00

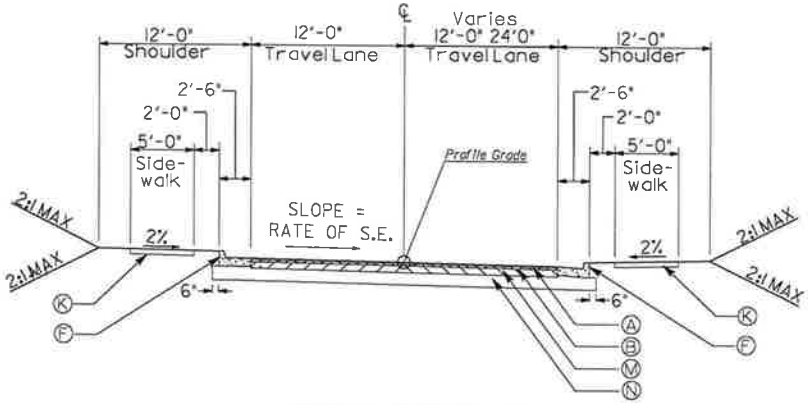

TYPICAL SECTION NO. 14
SUPER ELEVATED SECTION
N.T.S.

REQUIRED PAVEMENT

- (A) 165 LB/SY RECYCLED ASPH CONC 12.5 MM SUPERPAVE, GP 2 ONLY, INCL BITUM MATL & H LIME
- (B) 220 LB/SY RECYCLED ASPH CONC 19 MM SUPERPAVE, GP 1 OR 2, INCL BITUM MATL & H LIME
- (F) 8" X 30" CONC. CURB & GUTTER, TP 2
- (K) 4' CONC. SIDEWALK
- (M) 550 LB/SY RECYCLED ASPH CONC 25 MM SUPERPAVE, GP 1 OR 2, INCL BITUM MATL & H LIME
- (N) 10" GRADED AGGREGATE BASE

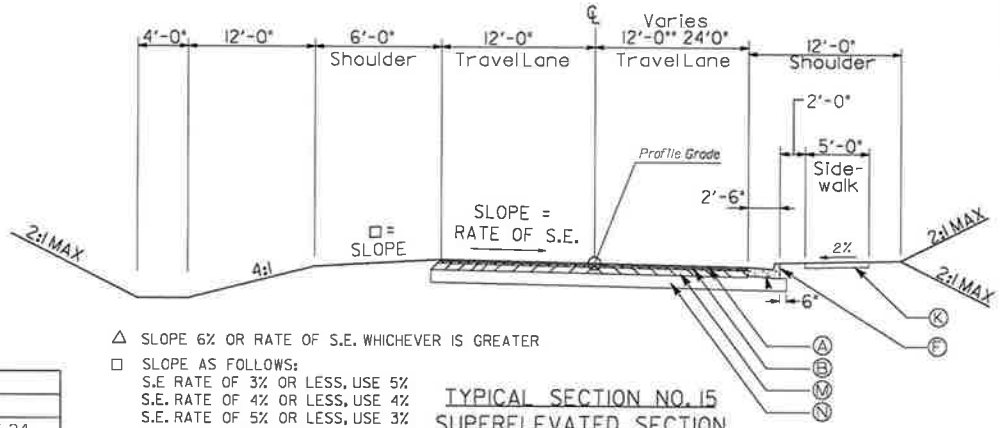

△ SLOPE 6% OR RATE OF S.E. WHICHEVER IS GREATER

□ SLOPE AS FOLLOWS:
S.E RATE OF 3% OR LESS, USE 5%
S.E. RATE OF 4% OR LESS, USE 4%
S.E. RATE OF 5% OR LESS, USE 3%
S.E. RATE OF 6% OR LESS, USE 2%

TYPICAL SECTION NO. 15
SUPERELEVATED SECTION
N.T.S.

USE WITH TYPICAL SECTION NO.15	
ROAD	STATION RANGE
CR 371	STA. 20+64.00 To 22+05.24

ARCADIS
Infrastructure · Water · Environment · Buildings

REVISION DATES		

GEORGIA
DEPARTMENT OF TRANSPORTATION
TYPICAL SECTION
PROJECT EDS00-0545-00(037)
COUNTY STEPHENS

DRAWING NO. 5-08

Date: 3/19/2012 User Name: jbongley Job Name: 63285 Time: 1:55:48 PM Filename: G:\TRA\63285\rdy\12260TYD.dgn PLOT DRIVER: uslfn.pgpkeng

STATE	PROJECT NUMBER	SHEET NO.	TOTAL SHEETS
GA.	EDS00-0545-00(037)		1046

USE WITH TYPICAL SECTION NO 16	
ROAD	STATION RANGE
CR 198	STA. 13+00.00 To 13+50.00
CR 6	STA. 27+00.00 To 27+50.00
CR 195	STA. 14+50.00 To 15+50.00
CR 4	STA. 22+50.00 To 23+00.00
CR 642	STA. 17+50.00 To 18+00.00
CR 192	STA. 16+25.00 To 17+00.00
CR 191	STA. 14+60.00 To 15+62.44

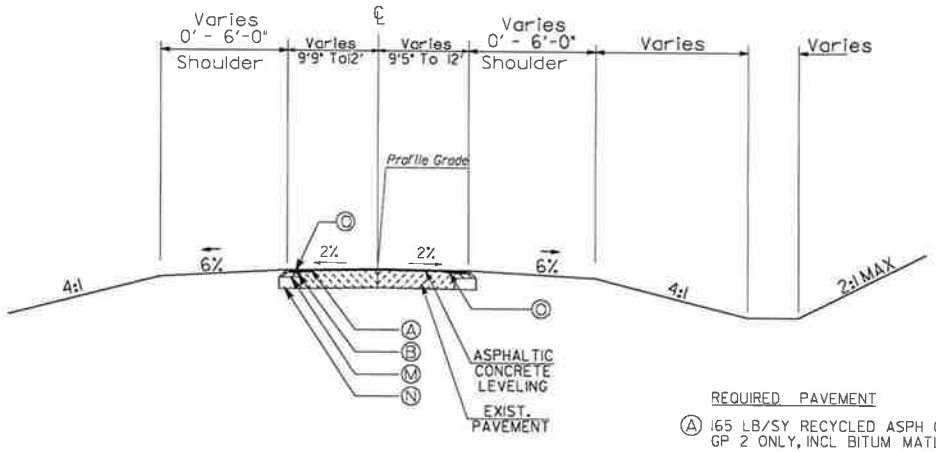

TYPICAL SECTION NO. 16
TANGENT SECTION
N.T.S.

REQUIRED PAVEMENT

- (A) 165 LB/SY RECYCLED ASPH CONC 12.5 MM SUPERPAVE, GP 2 ONLY, INCL BITUM MATL & H LIME
- (B) 220 LB/SY RECYCLED ASPH CONC 19 MM SUPERPAVE, GP 1 OR 2, INCL BITUM MATL & H LIME
- (M) 550 LB/SY RECYCLED ASPH CONC 25 MM SUPERPAVE, GP 1 OR 2, INCL BITUM MATL & H LIME
- (N) 10" GRADED AGGREGATE BASE
- (O) PAVEMENT REINFORCEMENT FABRIC, SEE DWG 5-12

ALLOWABLE RANGES TABLE

FOR THIS PROJECT, CROSS SLOPES THAT ARE ADJUSTED TO 'BEST FIT' EXISTING PAVEMENT SLOPES ARE SUBJECT TO THE FOLLOWING LIMITS:

A. NORMAL CROWN

SECTION WITH GRADES 0.5% OR GREATER	SECTION WITH GRADES LESS THAN 0.5%
0.0150 FT/FT - MINIMUM	0.0156 FT/FT - MINIMUM
0.0208 FT/FT - DESIRABLE	0.0208 FT/FT - DESIRABLE
0.0250 FT/FT - MAXIMUM	0.0300 FT/FT - MAXIMUM

B. SUPERELEVATION RATE
S.E. RATE SHOWN ON PLANS OR SE RATE EXISTING IN FIELD, WHICHEVER IS GREATER.

C. SUPERELEVATION TRANSITION LENGTH (LENGTH FROM FLAT POINT TO FULL SE)

	RATE OF CHANGE	CORRESPONDING DIFFERENCE IN GRADE BETWEEN PIVOT POINT AND EDGE OF PAVEMENT
MINIMUM	1:150	0.67%
DESIRABLE	1:200	0.50%
MAXIMUM	1:300	0.33%

D. POSITIONING OF SUPERELEVATION TRANSITION LENGTH ON SIMPLE CURVES
50% OF TRANSITION INSIDE CURVE - MAXIMUM
33% OF TRANSITION INSIDE CURVE - DESIRABLE
20% OF TRANSITION INSIDE CURVE - MINIMUM
NOTE: CROWN WIPE-OUT SHALL BE AT THE SAME RATE AS THE SE TRANSITION.

E. SMOOTHING OF BREAKS IN EDGE PROFILE AT BEGIN AND END OF TRANSITION SHALL BE ACCOMPLISHED BY VERTICAL CURVE WITH A MINIMUM LENGTH (IN FEET) EQUAL TO THE SPEED DESIGN (IN MPH).

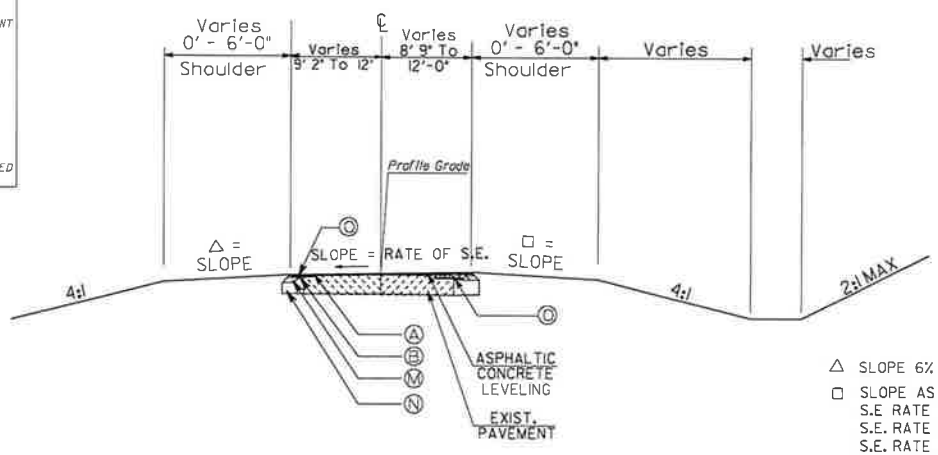

TYPICAL SECTION NO. 17
SUPERELEVATION SECTION
N.T.S.

△ SLOPE 6% OR RATE OF S.E. WHICHEVER IS GREATER

□ SLOPE AS FOLLOWS:
S.E RATE OF 3% OR LESS, USE 5%
S.E. RATE OF 4% OR LESS, USE 4%
S.E. RATE OF 5% OR LESS, USE 3%
S.E. RATE OF 6% OR LESS, USE 2%

ALGEBRAIC DIFFERENCE IN PAVING AND SHOULDER SLOPES NOT TO EXCEED 8%

USE WITH TYPICAL SECTION NO 17	
ROAD	STATION RANGE
CR 194	STA. 16+00.00 To 17+00.00
CR 371	STA. 22+05.24 To 23+00.00

ARCADIS
Infrastructure · Water · Environment · Buildings

REVISION DATES		

GEORGIA
DEPARTMENT OF TRANSPORTATION
TYPICAL SECTION
PROJECT EDS00-0545-00(037)
COUNTY STEPHENS

DRAWING NO. 5-09

Date: 3/15/2002 User Name: jungley Job Name: 63285 Time: 1:59:48 PM Filename: G:\TRA\63285\rdy\22260TYOl.dgn PLOT DRIVER: ustn.pgmeng

STATE	PROJECT NUMBER	SHEET NO.	TOTAL SHEETS
GA.	EDS00-0545-00(037)		1046

USE WITH TYPICAL SECTION NO 18	
ROAD	STATION RANGE
CR 642	STA. 18+00.00 To 18+74.00
CR 6	STA. 24+48.00 To 127+00.00

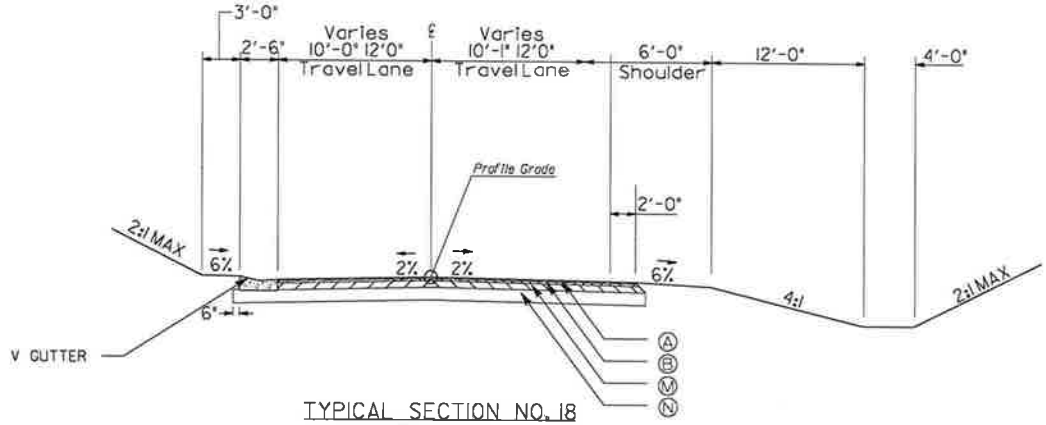

TYPICAL SECTION NO. 18
TANGENT SECTION
N.T.S.

REQUIRED PAVEMENT

- (A) 165 LB/SY RECYCLED ASPH CONC 12.5 MM SUPERPAVE, GP 2 ONLY, INCL BITUM MATL & H LIME
- (B) 220 LB/SY RECYCLED ASPH CONC 19 MM SUPERPAVE, GP 1 OR 2, INCL BITUM MATL & H LIME
- (M) 550 LB/SY RECYCLED ASPH CONC 25 MM SUPERPAVE, GP 1 OR 2, INCL BITUM MATL & H LIME
- (N) 10" GRADED AGGREGATE BASE

ARCADIS
Infrastructure · Water · Environment · Buildings

REVISION DATES		

GEORGIA
DEPARTMENT OF TRANSPORTATION
TYPICAL SECTION
PROJECT EDS00-0545-00(037)
COUNTY STEPHENS

DRAWING NO. 5-10

Date: 3/19/2002 User Name: jongley Job Name: 63285 Time: 1:59:48 PM Filename: G:\118\63285\Vdy\022601T06.dgn PLOT DRIVER: ustn.pgnerg

STATE	PROJECT NUMBER	SHEET NO.	TOTAL SHEETS
GA.	EDS00-0545-00(037)		1046

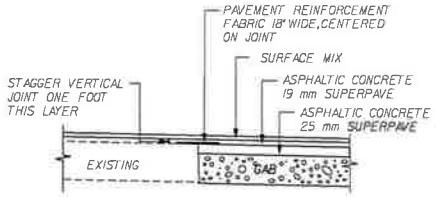

TYPICAL SECTION DETAIL TO BE USED WHEN
EXISTING PAVEMENT IS TO BE RESURFACED WITH TWO INCHES OR MORE OF ASPHALTIC CONCRETE

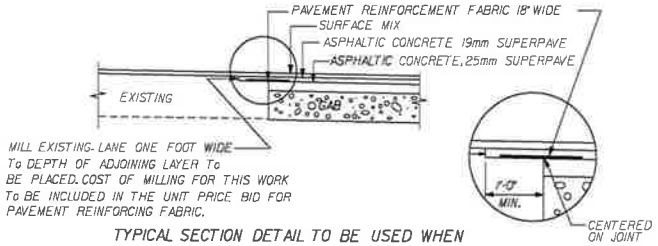

TYPICAL SECTION DETAIL TO BE USED WHEN
EXISTING PAVEMENT IS TO BE RESURFACED WITH LESS THAN TWO INCHES OF ASPHALTIC CONCRETE

PAVEMENT REINFORCEMENT FABRIC DETAIL

N.T.S.

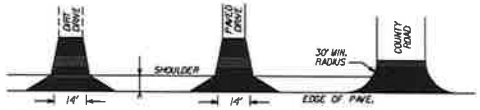

ALL DRIVEWAYS To BE CONSTRUCTED AT 90-DEGREES To THE ROADWAY.

ASPHALT AND CONCRETE DRIVES TO BE REPLACED IN KIND. AGGREGATE OR EARTH DRIVES TO BE PAVED TO THE RIGHT OF WAY OR TIE IN PONT WITH MATERIAL SHOWN ON THE CONSTRUCTION PLAN SHEETS. DRIVES TO BE PAVED AS FOLLOWS:

ASPHALT DRIVES
- RESIDENTIAL: 165 LBS/SY ASPHALTIC CONCRETE 12.5 MM SUPERPAVE; 6" GRADED AGGREGATE BASE
- COMMERCIAL: 165 LBS/SY ASPHALTIC CONCRETE 12.5 MM SUPERPAVE; 220 LBS/SY ASPHALTIC CONCRETE 19 MM SUPERPAVE; 6" GRADED AGGREGATE BASE

CONCRETE DRIVES
- RESIDENTIAL: 4" CONCRETE, 6" GRADED AGGREGATE BASE
- COMMERCIAL: 6" CONCRETE, 6" GRADED AGGREGATE BASE

DRIVEWAY DETAIL

NTS

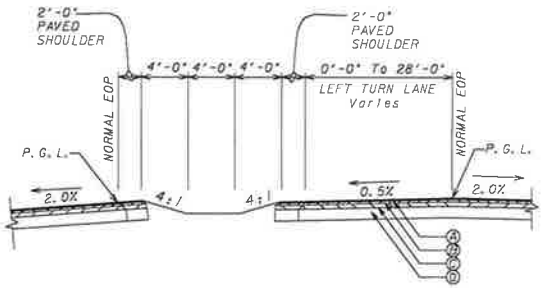

DETAIL FOR MEDIAN TURN LANE

TANGENT SECTION

SEE PLAN FOR LOCATION

N. T. S.

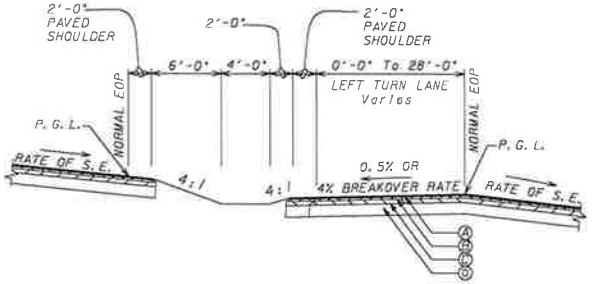

DETAIL FOR MEDIAN TURN LANE

SUPERELEVATION SECTION

SEE PLAN FOR LOCATION

N. T. S.

ARCADIS
Infrastructure · Water · Environment · Buildings

REVISION DATES		

GEORGIA
DEPARTMENT OF TRANSPORTATION
TYPICAL SECTION
PROJECT EDS00-0545-00(037)
COUNTY STEPHENS

DRAWING NO. 5-11

Date: 3/11/2002 User Name: jlongley Job Name: 63285 Time: 1:59:18 PM Filename: G:\TRAN\63285\Vrdy\022260TYOLdgn PLOT DRIVER: usfn_dgnerg

STATE	PROJECT NUMBER	SHEET NO.	TOTAL SHEETS
GA.	EDS00-0545-00(037)		1046

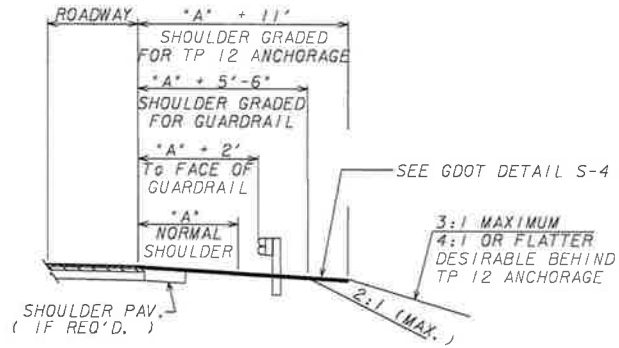

TYPICAL SHOULDER DETAIL FOR GUARDRAIL
RURAL SHOULDER LOCATIONS
SEE PLAN FOR LOCATION

N. T. S.
(SEE GA.STD.4051)

APPLIES TO STATION TO STATION	LOCATION
413+00 TO 415+50 +/-	LEFT
441+00 TO 443+00 +/-	LEFT & RIGHT
468+50 TO 472+00 +/-	RIGHT

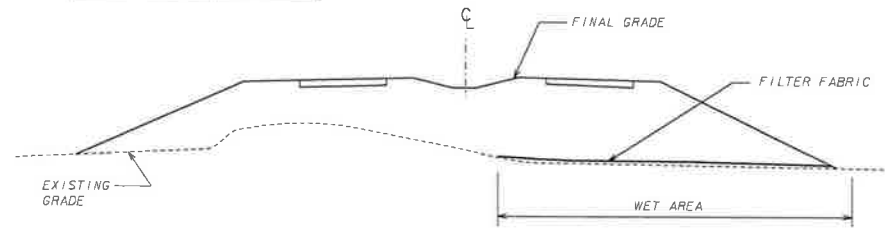

NOTES:
1. FILTER FABRIC SHALL BE PLACED IN LOW WET AREAS WITHOUT ANY STANDING WATER, OR IF ANY STANDING WATER CAN BE DRAINED PRIOR TO FABRIC PLACEMENT.
2. ALL TREES, DEBRIS AND OTHER ORGANIC MATTER SHALL BE REMOVED PRIOR TO FABRIC PLACEMENT.
3. FILTER FABRIC SHALL BE CONSTRUCTED AT LOCATIONS LISTED ABOVE, AS DIRECTED BY THE ENGINEER.

FILTER FABRIC DETAIL

N. T. S.

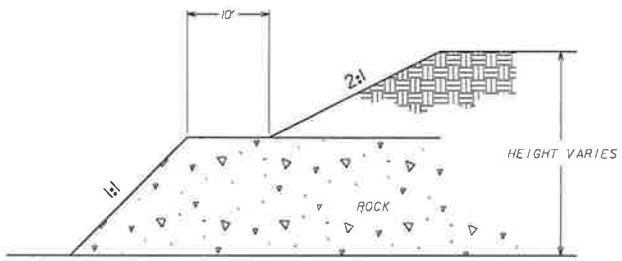

SLOPES CUT AT 1:1 IN INTACT ROCK MAY BE APPLICABLE AT THE FOLLOWING LOCATIONS, AT THE DISCRETION OF THE ENGINEER:

STATION RANGE	LOCATION	DEPTH TO ROCK
457+50± TO 458+50±	RIGHT	~1'
468+75± TO 470+50±	LEFT	11' - 24'

DETAIL FOR ROCK CUT

N. T. S.

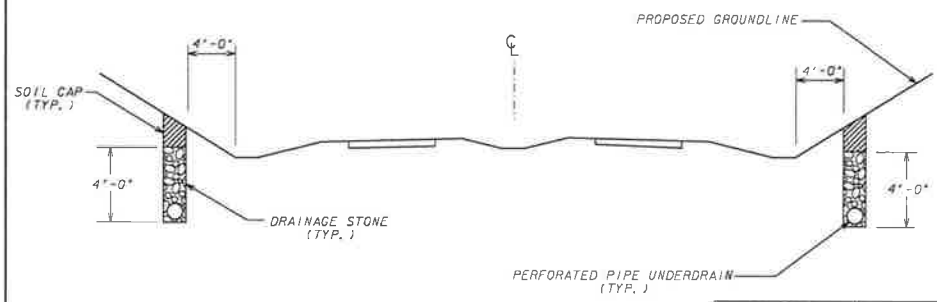

APPLIES TO STATION TO STATION	LOCATION
415+50 TO 417+50 +/-	RIGHT
21+00 TO 24+50 +/- (OLD MILL BRIDGE RD)	LEFT

NOTES:
1. PERFORATED UNDERDRAIN TO BE PLACED AT 4 FEET IN ACCORDANCE WITH STANDARD 9029B
2. PIPES SHALL BE TIED INTO CROSS DRAIN PIPES
3. UNDERDRAINS SHALL BE INSTALLED AT THE DIRECTION OF THE ENGINEER
4. WHERE UNDERDRAINS WILL BE INSTALLED IN CONJUNCTION WITH SLOPE DRAINS, SLOPE DRAINS SHALL BE PLACED A SUFFICIENT DISTANCE ABOVE THE UNDERDRAIN AS NOT TO INTERFERE WITH UNDERDRAIN INSTALLATION

UNDERDRAIN PLACEMENT
DETAIL FOR HIGH WATER TABLE AREAS

N. T. S.

ARCADIS
Infrastructure · Water · Environment · Buildings

REVISION DATES		

GEORGIA
DEPARTMENT OF TRANSPORTATION
TYPICAL SECTION
PROJECT EDS00-0545-00(037)
COUNTY STEPHENS

DRAWING NO. 5-12

Date: 5/19/2012 User Name: jhongley Job Name: 63285 Time: 1:59:48 PM Filename: G:\TRA\63285\r-dy\R2260TTO1.dgn PLOT DRIVER: ustn.pgnseng

STATE	PROJECT NUMBER	SHEET NO.	TOTAL SHEETS
GA.	EDS00-0545-00(037)		1046

RIGHT TURN LANE DETAIL

N. T. S.

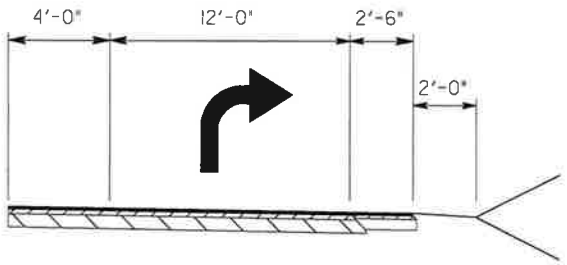

6'-6" PAVED SHOULDER WITH 16" MILLED RUMBLE STRIPS

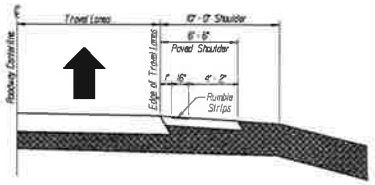

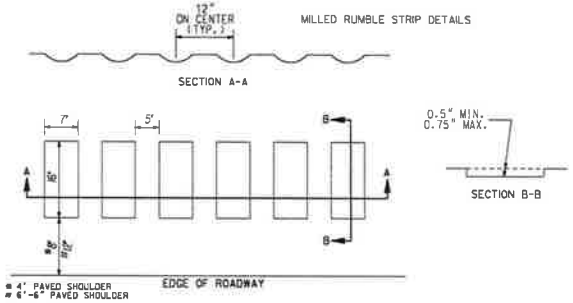

ROADWAY CENTERLINE

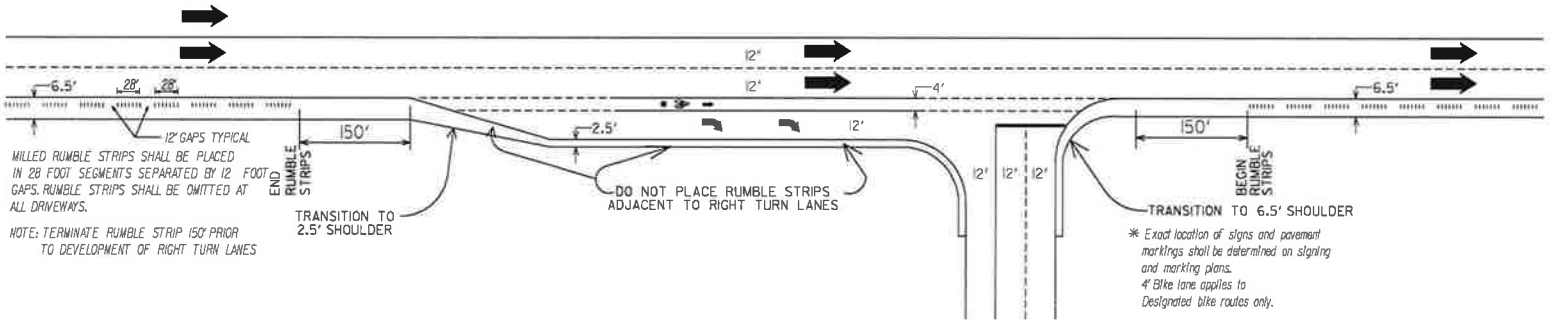

SPECIAL DESIGN DETAIL

MILLED RUMBLE STRIPS AND BICYCLE ACCOMODATION DETAILS

ARCADIS
Infrastructure · Water · Environment · Buildings

REVISION DATES

GEORGIA DEPARTMENT OF TRANSPORTATION
TYPICAL SECTION
PROJECT EDS00-0545-00(037)
COUNTY STEPHENS

DRAWING NO. 5-14

Date: 3/9/2012 User Name: jlangley Job Name: 63285 Time: 1:59:48 PM Filename: G:\TRA\63285\rdy\022260170L.dgn PLOT DRIVER: wsiva_ogmdmg

STATION RANGE	LOCATION	MAX. DEPTH
408+00± TO 413+00±	UNDER PROPOSED CULVERT	7'
467+75±	UNDER PROPOSED CULVERT	6'

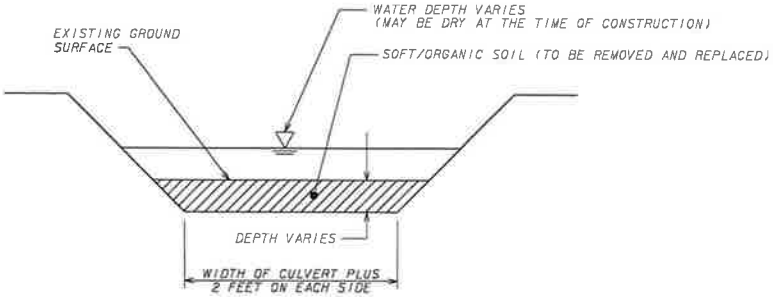

NOTES:

1. DEWATER THE AREA AS NEEDED PRIOR TO SOFT/ORGANIC SOIL REMOVAL. REMOVE SOFT/ORGANIC SOIL TO DEPTHS AS DIRECTED BY THE ENGINEER.
2. PLACE BACKFILL MATERIAL IN THE EXCAVATED AREA IN ACCORDANCE WITH THE STANDARD SPECIFICATIONS.
3. IF THERE IS NO STANDING WATER AFTER SOFT/ORGANIC SOIL REMOVAL, PLACE NORMAL BACKFILL MATERIAL TO BRING UP THE EXCAVATED AREA TO PROPOSED CULVERT SUBGRADE.
4. IF THERE IS NO STANDING WATER AFTER SOFT/ORGANIC SOIL REMOVAL, PALCE A MAT OF ROCK EMBANKMENT TO A HEIGHT OF 18 INCHES ABOVE THE WATER ELEVATION PRIOR TO PLACING NORMAL BACKFILL.

REMOVAL DETAIL

N. T. S.

STATE	PROJECT NUMBER	SHEET NO.	TOTAL SHEETS
GA.	EDS00-0545-00(037)		1046

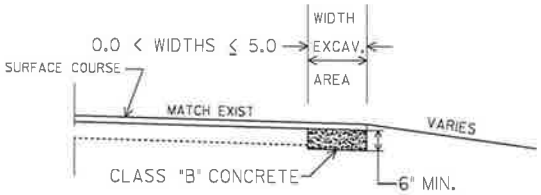

NO SCALE

CLASS "B" CONCRETE BASE OR PAVEMENT WIDENING

Item Code 500-9999 - Cu. Yds.

In excavated areas between the existing paving and new edge of shoulder that are 5'-0" or less in width, Class "B" concrete shall be placed in lieu of the base and paving specified by the typical section. Payment will be made under "Class B Concrete Base and Pavement Widening".

In excavated areas greater than 5'-0" in width, the Contractor shall place base and paving as specified on the typical section.

ARCADIS
Infrastructure · Water · Environment · Buildings

REVISION DATES

GEORGIA
DEPARTMENT OF TRANSPORTATION
TYPICAL SECTION
PROJECT EDS00-0545-00(037)
COUNTY STEPHENS

DRAWING NO. 5-13

Date: 3/8/2012 User Name: jbongley Job Name: 63285 Time: 1:59:48 PM Filename: G:\FMA\63285\v-dgn\V22X6516110.dgn PLOT DRIVER: ustm.pgmsing

Attachment 3

Cost Estimate

JOB ESTIMATE REPORT

JOB NUMBER : 122260 SPEC YEAR: 01
DESCRIPTION: SR 17 ROADWAY IMPROVEMENTS
STEPHENS COUNTY

ITEMS FOR JOB 122260

LINE	ITEM	ALT	UNITS	DESCRIPTION	QUANTITY	PRICE	AMOUNT
0005	150-1000		LS	TRAFFIC CONTROL - PROJECT EDS 545(37)	1.000	750000.00	750000.00
0006	153-1300		EA	FIELD ENGINEERS OFFICE TP 3	1.000	52765.84	52765.84
0010	201-1500		LS	CLEARING & GRUBBING - PROJECT EDS 545(37)	1.000	2000000.00	2000000.00
0015	205-0001		CY	UNCLASS EXCAV	307000.000	3.01	925040.12
0020	207-0203		CY	FOUND BKFILL MATL, TP II	996.000	40.72	40565.40
0022	211-0200		CY	BR EXCAV, GRADE SEPARATION	1200.000	17.29	20759.72
0025	310-1101		TN	GR AGGR BASE CRS, INCL MATL	129900.000	13.99	1818457.11
0030	318-3000		TN	AGGR SURF CRS	1000.000	16.58	16584.64
0035	402-1812		TN	RECYL AC LEVELING,INC BM&HL	10000.000	57.21	572194.10
0040	402-3110		TN	RECY ASPH 9.5 MMSP,GP1OR2,INCL B M & HL	3000.000	75.00	225000.00
0045	402-3113		TN	RECYL AC 12.5MM SP,GP1/2,BM&HL	0.000		
0050	402-3121		TN	RECYL AC 25MM SP,GP1/2,BM&HL	52700.000	49.80	2624691.35
0055	402-3190		TN	RECYL AC 19 MM SP,GP 1 OR 2 ,INC BM&HL	21600.000	53.21	1149412.03
0060	402-4510		TN	RECYL AC 12.5 MM SP,GP2ONLY,INC P-MBM&HL	13300.000	64.23	854362.74
0065	413-1000		GL	BITUM TACK COAT	27700.000	1.53	42505.37
0066	432-5010		SY	MILL ASPH CONC PVMT,VARB DEPTH	20000.000	1.64	32907.20
0070	433-1000		SY	REINF CONC APPROACH SLAB	930.000	140.50	130672.77
0071	436-1000		LF	ASPH CONC CURB - PROJECT EDS 545(37)	3300.000	9.25	30543.81
0075	441-0014		SY	DRIVEWAY CONCRETE, 4 IN TK	100.000	26.72	2672.09
0080	441-0016		SY	DRIVEWAY CONCRETE, 6 IN TK	100.000	31.46	3146.29
0085	441-0050		SY	CONC SLOPE DRAIN	100.000	44.96	4496.19
0090	441-0104		SY	CONC SIDEWALK, 4 IN	4800.000	25.21	121047.94
0091	441-0204		SY	PLAIN CONC DITCH PAVING, 4 IN	1320.000	28.16	37178.01
0095	441-0303		EA	CONC SPILLWAY, TP 3	1.000	1850.43	1850.43
0100	441-0740		SY	CONC MEDIAN, 4 IN	3600.000	18.97	68314.14
0105	441-3999		LF	CONCRETE V GUTTER	803.000	15.92	12789.91
0110	441-4030		SY	CONC VALLEY GUTTER, 8 IN	1100.000	36.83	40520.01
0115	441-6222		LF	CONC CURB & GUTTER/ 8"X30"TP2	9700.000	11.46	111193.72
0120	441-6740		LF	CONC CURB & GUTTER/ 8"X30" TP7	26100.000	10.26	267968.70
0125	446-1100		LF	PVMT REF FAB STRIPS, TP2,18 INCH WIDTH	500.000	4.44	2220.28
0126	456-2015		GLM	INDENT. RUMB. STRIPS - GRND-IN-PL (SKIP)	8.000	1150.53	9204.28
0130	500-3101		CY	CLASS A CONCRETE	1515.000	462.03	699977.28
0131	500-3200		CY	CL B CONC	620.000	149.61	92760.23
0135	500-3800		CY	CL A CONC, INCL REINF STEEL	35.000	688.20	24087.35
0140	511-1000		LB	BAR REINF STEEL	165001.000	0.58	96253.33
0145	622-1033		LF	PRECAST CONC MED BAR, MTH 3	6250.000	42.00	262500.00

JOB ESTIMATE REPORT

0150	634-1200	EA	RIGHT OF WAY MARKERS	300.000	97.16	29149.82
0155	627-1000	SF	MSE WALL FACE, 0 - 10 FT HT, WALL NO - 1	5000.000	37.85	189281.90
0160	627-1160	LF	TRAFFIC BARRIER H, WALL NO - 1	250.000	177.21	44303.70
0161	632-0003	EA	CHANGEABLE MESS SIGN,PORT,TP 3	2.000	8231.25	16462.50
0165	641-1100	LF	GUARDRAIL, TP T	153.000	49.86	7628.65
0170	641-1200	LF	GUARDRAIL, TP W	5861.000	14.72	86290.27
0175	641-2100	LF	DBL FACED GUARDRAIL, TP T	494.000	35.00	17290.00
0180	641-5001	EA	GUARDRAIL ANCHORAGE, TP 1	21.000	620.07	13021.68
0185	641-5012	EA	GUARDRAIL ANCHORAGE, TP 12	10.000	1809.53	18095.37
0190	641-6000	EA	GRDRAIL ANCH TP 10D, SPCL DES	2.000	4263.81	8527.64
0195	643-4000	LF	WOVEN WIRE FENCE	1250.000	7.26	9082.91
0200	643-8040	EA	GATE, WOVEN WIRE - 1	2.000	508.27	1016.55
0205	643-8200	LF	BARRIER FENCE (ORANGE), 4 FT	1000.000	1.51	1512.63
0206	668-6000	EA	SPRING BOX	5.000	1221.62	6108.13
0210	513-9000	LS	PRECAST CONCRETE ARCH CULVERT	1.000	550000.00	550000.00
0215	550-1180	LF	STM DR PIPE 18",H 1-10	14400.000	26.47	381199.82
0220	550-1240	LF	STM DR PIPE 24",H 1-10	3700.000	34.59	127992.07
0225	550-1300	LF	STM DR PIPE 30",H 1-10	1400.000	41.54	58162.33
0230	550-1301	LF	STM DR PIPE 30",H 10-15	320.000	44.74	14317.40
0235	550-1360	LF	STM DR PIPE 36",H 1-10	290.000	61.01	17694.71
0240	550-1420	LF	STM DR PIPE 42",H 1-10	450.000	68.87	30994.76
0245	550-1480	LF	STM DR PIPE 48",H 1-10	51.000	74.51	3800.52
0250	550-1540	LF	STM DR PIPE 54",H 1-10	110.000	117.51	12926.71
0255	550-3418	EA	SAFETY END SECTION 18",SD,4:1	11.000	462.51	5087.66
0260	550-3424	EA	SAFETY END SECTION 24",SD,4:1	10.000	794.67	7946.72
0265	550-3430	EA	SAFETY END SECTION 30",SD,4:1	12.000	886.87	10642.52
0270	550-3436	EA	SAFETY END SECTION 36",SD,4:1	2.000	1500.00	3000.00
0275	550-3442	EA	SAFETY END SECTION 42",SD,4:1	3.000	2800.00	8400.00
0280	550-3518	EA	SAFETY END SECTION 18",STD,6:1	9.000	600.86	5407.80
0285	550-3524	EA	SAFETY END SECTION 24",STD,6:1	10.000	793.49	7934.97
0290	550-3530	EA	SAFETY END SECTION 30",STD,6:1	12.000	1591.89	19102.74
0295	550-3536	EA	SAFETY END SECTION 36",STD,6:1	2.000	1799.30	3598.61
0300	550-3542	EA	SAFETY END SECTION 42",STD,6:1	3.000	2200.00	6600.00
0305	550-4218	EA	FLARED END SECT 18 IN, ST DR	9.000	463.05	4167.53
0310	550-4224	EA	FLARED END SECT 24 IN, ST DR	8.000	556.30	4450.44
0315	550-4230	EA	FLARED END SECT 30 IN, ST DR	6.000	664.42	3986.52
0320	550-4236	EA	FLARED END SECT 36 IN, ST DR	3.000	942.09	2826.28
0325	573-2006	LF	UNDDR PIPE INCL DRAIN AGGR 6"	650.000	12.48	8115.29
0326	576-1015	LF	SLOPE DRAIN PIPE, 15 IN	1425.000	23.85	33992.22
0327	576-1018	LF	SLOPE DRAIN PIPE, 18 IN	215.000	27.51	5915.94
0328	577-1100	EA	METAL DR INLET - CMPLT ASSMBLY	10.000	1103.93	11039.39
0330	603-2030	SY	STN DUMPED RIP RAP, TP 1, 30"	2933.000	75.00	219975.00
0335	603-2180	SY	STN DUMPED RIP RAP, TP 3, 12"	210.000	37.88	7956.84
0340	603-2181	SY	STN DUMPED RIP RAP, TP 3, 18"	120.000	41.11	4933.81
0345	603-2182	SY	STN DUMPED RIP RAP, TP 3, 24"	83.000	42.87	3558.34
0350	603-2184	SY	STN DUMPED RIP RAP, TP 3, 30"	200.000	42.41	8483.10
0355	603-2186	SY	STN DUMPED RIP RAP, TP 3, 36"	210.000	54.66	11479.06
0360	603-7000	SY	PLASTIC FILTER FABRIC	3756.000	3.30	12420.34
0365	668-1100	EA	CATCH BASIN, GP 1	68.000	1964.63	133595.03
0370	668-1110	LF	CATCH BASIN, GP 1, ADDL DEPTH	36.000	136.49	4913.95
0375	668-2100	EA	DROP INLET, GP 1	31.000	1622.21	50288.78
0380	668-2110	LF	DROP INLET, GP 1, ADDL DEPTH	48.000	140.68	6753.08
0385	668-2200	EA	DROP INLET, GP 2	3.000	2396.33	7189.00

JOB ESTIMATE REPORT

0390	668-2210	LF	DROP INLET, GP 2, ADDL DEPTH	7.000	199.50	1396.55
0395	668-4300	EA	STORM SEW MANHOLE, TP 1	2.000	1758.60	3517.21
0400	668-4311	LF	ST SEW MANHOLE,TP 1,A DEP,CL 1	9.000	187.47	1687.31
0405	668-5000	EA	JUNCTION BOX	1.000	1628.24	1628.25
0410	668-7000	EA	DRWAY GRATE INLET SP D PIP SZ-	2.000	6940.27	13880.55
0415	668-8011	SF	SAFETY GRATE, TP 1	78.000	49.54	3864.79
0420	163-0232	AC	TEMPORARY GRASSING	30.000	39.04	1171.22
0425	163-0240	TN	MULCH	1300.000	157.67	204972.81
0430	163-0300	EA	CONSTRUCTION EXIT	10.000	962.11	9621.13
0435	163-0503	EA	CONSTR AND REMOVE SILT CONTROL GATE,TP 3	60.000	355.28	21317.18
0436	163-0520	LF	CONSTR AND REMOVE TEMP PIPE SLOPE DRAIN	5950.000	9.82	58430.25
0440	163-0521	EA	CONSTR AND REMOVE TEMP DITCH CHECKS	700.000	220.00	154000.00
0441	163-0527	EA	CNST/REM RIP RAP CKDM,STN P RIPRAP/SN BG	265.000	216.87	57472.08
0442	163-0528	LF	CONSTR AND REM FAB CK DAM -TP C SLT FN	11550.000	2.40	27831.00
0443	163-0529	LF	CNST/REM TEMP SED BAR OR BLD STRW CK DM	17650.000	3.10	54852.32
0445	163-0531	EA	CONSTR & REM SEDIMENT BASIN,TP 1,STA NO- 1	1.000	5584.25	5584.25
0450	163-0550	EA	CONS & REM INLET SEDIMENT TRAP	200.000	107.31	21462.68
0455	165-0010	LF	MAINT OF TEMP SILT FENCE, TP A	15000.000	0.48	7204.95
0460	165-0030	LF	MAINT OF TEMP SILT FENCE, TP C	7500.000	0.74	5563.13
0465	165-0040	EA	MAINT OF EROSION CTRL CHKDAMS/DITCH CHKS	700.000	87.00	60900.00
0470	165-0060	EA	MAINT OF TEMP SEDIMENT BASIN,STA NO -	1.000	635.18	635.18
0475	165-0087	EA	MAINT OF SILT CONTROL GATE, TP 3	50.000	108.89	5444.86
0480	165-0101	EA	MAINT OF CONST EXIT	7.000	465.96	3261.72
0485	165-0105	EA	MAINT OF INLET SEDIMENT TRAP	170.000	52.68	8956.60
0490	167-1000	EA	WATER QUALITY MONITORING AND SAMPLING	10.000	200.71	2007.14
0495	167-1500	MO	WATER QUALITY INSPECTIONS	36.000	557.14	20057.14
0500	171-0010	LF	TEMPORARY SILT FENCE, TYPE A	30000.000	1.14	34314.90
0505	171-0030	LF	TEMPORARY SILT FENCE, TYPE C	15000.000	2.52	37827.30
0506	620-0100	LF	TEMP BARRIER, METHOD NO. 1	5000.000	24.36	121801.50
0510	700-6910	AC	PERMANENT GRASSING	75.000	395.33	29650.37
0515	700-7000	TN	AGRICULTURAL LIME	150.000	22.82	3423.81
0520	700-7010	GL	LIQUID LIME	130.000	16.87	2193.20
0525	700-8000	TN	FERTILIZER MIXED GRADE	75.000	448.71	33653.26
0530	700-8100	LB	FERTILIZER NITROGEN CONTENT	2750.000	1.85	5108.73
0535	715-2200	SY	BITUM TRTD ROVING, WATERWAYS	25000.000	1.13	28272.50
0540	716-2000	SY	EROSION CONTROL MATS, SLOPES	115000.000	0.70	80986.45
0545	636-1020	SF	HWY SGN,TP1MAT,REFL SH TP3	882.000	12.06	10642.66
0550	636-1029	SF	HWY SGN,TP2 MATL,REFL SH TP 3	135.000	13.20	1782.02
0555	636-1031	SF	HWY SIGNS,TP1MTL,RFL SHTG,TP6	1419.000	28.00	39732.00
0560	636-1032	SF	HWY SIGNS,TP2MATL,RFL SHTG,TP6	38.000	20.00	760.00
0565	636-2070	LF	GALV STEEL POSTS, TP 7	3456.000	6.72	23224.46
0570	639-2002	LF	STEEL WIRE STRAND CABLE, 3/8"	350.000	3.60	1262.02
0575	639-3004	EA	STEEL STRAIN POLE, TP IV	2.000	8547.13	17094.26
0580	653-0120	EA	THERM PVMT MARK, ARROW, TP 2	120.000	64.84	7781.17
0585	653-0170	EA	THERM PVMT MARK, ARROW, TP 7	44.000	85.48	3761.22

JOB ESTIMATE REPORT

0590	653-1501	LF	THERMO SOLID TRAF ST 5 IN, WHI	50250.000	0.32	16127.24
0595	653-1502	LF	THERMO SOLID TRAF ST, 5 IN YEL	33500.000	0.32	10783.65
0600	653-1704	LF	THERM SOLID TRAF STRIPE,24",WH	420.000	3.61	1517.97
0605	653-1804	LF	THERM SOLID TRAF STRIPE, 8",WH	2800.000	1.67	4685.88
0610	653-4501	GLM	THERMO SKIP TRAF ST, 5 IN, WHI	8.000	711.92	5695.36
0615	653-6004	SY	THERM TRAF STRIPING, WHITE	15813.000	2.54	40254.84
0620	653-6006	SY	THERM TRAF STRIPING, YELLOW	429.000	2.97	1276.89
0625	654-1001	EA	RAISED PVMT MARKERS TP 1	1798.000	2.88	5182.23
0630	654-1003	EA	RAISED PVMT MARKERS TP 3	1000.000	3.08	3080.35
0635	654-1010	EA	RAISED PVMT MARKERS TP 10	56.000	32.64	1828.20
0640	657-1054	LF	PRF PL SD PVMT MKG,5",WH,TP PB	1350.000	3.58	4840.97
0645	657-3054	GLF	PRF PL SK PVMT MKG,5",WH,TP PB	450.000	2.56	1154.45
0650	657-6054	LF	PRF PL SD PVMT MKG,5",YW,TP PB	450.000	4.43	1994.70
0655	647-1000	LS	TRAF SIGNAL INSTALLATION NO - 1	1.000	150000.00	150000.00
0660	647-1000	LS	TRAF SIGNAL INSTALLATION NO - 1	1.000	150000.00	150000.00
0665	500-0100	SY	GROOVED CONCRETE	1362.000	4.51	6147.25
0670	500-1006	LS	SUPERSTR CONCRETE, CL AA, BR NO - 1 (494)	1.000	330000.00	330000.00
0675	500-2100	LF	CONCRETE BARRIER	241.000	37.06	8933.38
0680	500-3101	CY	CLASS A CONCRETE	82.000	500.91	41074.77
0685	507-9032	LF	PSC BEAMS,AASHTO,BULB TEE, 72"	1627.000	176.78	287628.27
0690	511-1000	LB	BAR REINF STEEL	9778.000	0.71	6997.63
0695	511-3000	LS	SUPERSTR REINF STEEL, BR NO - 1 (85793)	1.000	75000.00	75000.00
0700	520-0589	EA	H-PILE POINTS, HP 14 X 89	3.000	183.50	550.51
0705	520-1151	LF	PIL-IN-PL,STEEL H,HP 14 X 89	950.000	53.62	50944.82
0710	520-4151	EA	LOAD TEST, STEEL H, HP 14 X 89	1.000	0.44	0.45
0715	603-2024	SY	STN DUMPED RIP RAP, TP 1, 24"	1740.000	41.73	72617.80
0720	603-7000	SY	PLASTIC FILTER FABRIC	1740.000	3.44	5998.16
0725	207-0203	CY	FOUND BKFILL MATL, TP II	24.000	52.02	1248.69
0730	211-0300	CY	BR EXCAV, STREAM CROSSING	160.000	27.13	4341.19
0735	500-0100	SY	GROOVED CONCRETE	1795.000	4.18	7507.10
0740	500-1006	LS	SUPERSTR CONCRETE, CL AA, BR NO - 2 (520)	1.000	350000.00	350000.00
0745	500-2100	LF	CONCRETE BARRIER	390.000	35.01	13656.18
0750	500-3002	CY	CL AA CONCRETE	320.000	550.82	176265.58
0755	507-9001	LF	PSC BEAMS,AASHTO TP I, BR NO - 2	700.000	85.27	59694.23
0760	507-9030	LF	PSC BEAMS,AASHTO,BULB TEE, 54"	1150.000	146.19	168129.22
0765	511-1000	LB	BAR REINF STEEL	60000.000	0.62	37658.40
0770	511-3000	LS	SUPERSTR REINF STEEL, BR NO - 2 (115000)	1.000	90000.00	90000.00
0775	520-1125	LF	PIL-IN-PL,STEEL H,HP 12 X 53	3100.000	36.66	113665.75
0780	520-4125	EA	LOAD TEST, STEEL H, HP 12 X 53	1.000	0.98	0.99

ITEM TOTAL 18959738.58
INFLATED ITEM TOTAL 18959738.58

TOTALS FOR JOB 122260

ESTIMATED COST: 18959738.64
CONTINGENCY PERCENT (0.0): 0.00
ESTIMATED TOTAL: 18959738.64

Date 5/7/2012

P.I. Number **122260** County **STEPHENS COUNTY**

Project Number **EDS00-0545-00(037)**

Special Provision, Section 109-Measurement and Payment

FUEL PRICE ADJUSTMENT *(ENGLISH 125% MAX)*

ENTER FPL DIESEL	3.923
ENTER FPM DIESEL	8.827

ENTER FPL UNLEADED	3.664
ENTER FPM UNLEADED	8.244

http://www.dot.ga.gov/doingbusiness/Materials/Pages/asphaltcementindex.aspx

INCREASE ADJUSTMENT
125.00%

INCREASE ADJUSTMENT
125.00%

ROADWAY ITEMS	QUANTITY	DIESEL FACTOR	GALLONS DIESEL	UNLEADED FACTOR	GALLONS UNLEADED	REMARKS
Excavations paid as specified by Sections 205 **(CUBIC YARD)**	307000.000	0.29	89030.00	0.15	46050.00	
Excavations paid as specified by Sections 206 **(CUBIC YARD)**		0.29		0.15		
GAB paid as specified by the ton under Section 310 **(TON)**	129900.000	0.29	37671.00	0.24	31176.00	
Hot Mix Asphalt paid as specified by the ton under Sections 400 **(TON)**		2.90		0.71		
Hot Mix Asphalt paid as specified by the ton under Sections 402 **(TON)**	100600.000	2.90	291740.00	0.71	71426.00	
PCC Pavement paid as specified by the square yard under Section 430 **(SY)**		0.25		0.20		

BRIDGE ITEMS	Quantity	Unit Price	QF/1000	Diesel Factor	Gallons Diesel	Unleaded Factor	Gallons Unleaded	REMARKS
Bridge Excavation (CY) Section 211	160.00	27.13	4.3408	8.00	34.73	1.50	6.51	
Class __Concrete (CY) Section 500	1597.00	462.03	737.8619	8.00	5902.90	1.50	1106.79	CLASS A
Class __Concrete (CY) Section 500	35.00	688.20	24.0870	8.00	192.70	1.50	36.13	CLASS A INCL REINF STEEL
Class __Concrete (CY) Section 500	320.00	550.82	176.2624	8.00	1410.10	1.50	264.39	CLASS AA
Superstru Con Class__(CY) Section 500				8.00		1.50		
Superstru Con Class__(CY) Section 500				8.00		1.50		
Superstru Con Class__(CY) Section 500				8.00		1.50		
Concrete Handrail (LF) Section 500				8.00		1.50		
Concrete Barrier (LF) Section 500				8.00		1.50		

BRIDGE ITEMS	Quantity	Unit Price	QF/1000	Diesel Factor	Gallons Diesel	Unleaded Factor	Gallons Unleaded	REMARKS
Stru Steel Plan Quantity (LB) Section 501				8.00		1.50		
Stru Steel Plan Quantity (LB) Section 501				8.00		1.50		
PSC Beams_____ (LF) Section 507	1627.00	176.78	287.6211	8.00	2300.97	1.50	431.43	72"
PSC Beams_____ (LF) Section 507	700.00	85.27	59.6890	8.00	477.51	1.50	89.53	TP 1, BR NO. 2
PSC Beams_____ (LF) Section 507	1150.00	146.19	168.1185	8.00	1344.95	1.50	252.18	54"
Stru Reinf Plan Quantity(LB) Section 511				8.00		1.50		
Stru Reinf Plan Quantity(LB) Section 511				8.00		1.50		
Bar Reinf Steel (LB) Section 511	174779.00	0.71	124.0931	8.00	992.74	1.50	186.14	
Piling___inch (LF) Section 520	950.00	53.62	50.9390	8.00	407.51	1.50	76.41	14 X 89
Piling___inch (LF) Section 520	3100.00	36.66	113.6460	8.00	909.17	1.50	170.47	12 X 53
Piling___inch (LF) Section 520				8.00		1.50		
Piling___inch (LF) Section 520				8.00		1.50		
Piling___inch (LF) Section 520				8.00		1.50		
Piling___inch (LF) Section 520				8.00		1.50		
Drilled Caisson,___ (LF) Section 524				8.00		1.50		
Drilled Caisson,___ (LF) Section 524				8.00		1.50		
Drilled Caisson,___ (LF) Section 524				8.00		1.50		
Pile Encasement,___(LF) Section 547				8.00		1.50		
Pile Encasement,___(LF) Section 547				8.00		1.50		

SUM QF DIESEL=	**432414.27**	**SUM QF UNLEADED=**	**151271.99**

DIESEL PRICE ADJUSTMENT($)	**$1,950,815.36**
UNLEADED PRICE ADJUSTMENT($)	**$637,399.65**

ASPHALT CEMENT PRICE ADJUSTMENT
(BITUMINOUS TACK COAT 125% MAX)

APPLICABLE TO CONTRACTS/PROJECTS CONTAINING THE 413 SPECIFICATION, SECTION 413.5.01 ADJUSTMENTS
ASPHALT PRICE ADJUSTMENT FOR BITUMINOUS TACK COAT

http://www.dot.ga.gov/doingbusiness/Materials/Pages/asphaltcementindex.aspx

ENTER APL 614 **ENTER APM** 1381.5

125.00%	INCREASE ADJUSTMENT

L.I.N.	TYPE	TACK (GALLONS)	TACK (TONS)	REMARKS
413-1000		27700	118.9743	

TMT = 118.9743

PRICE ADJUSTMENT($)	$87,660.24

400 / 402 ASPHALT CEMENT PRICE ADJUSTMENT 125% MAX

ENTER APL 614 **ENTER APM** 1381.5

http://www.dot.ga.gov/doingbusiness/Materials/Pages/asphaltcementindex.aspx

125.00%	INCREASE ADJUSTMENT

L.I.N. / Spec Number	MIX TYPE	HMA	JMF AC%	AC	REMARKS
402-1812	9.5 mm SMA	10000	5.00	500.00	
402-3110	9.5 mm SP TP1	3000	5.00	150.00	
402-3113	12.5 mm OGFC		5.00		
402-3121	25 mm SP	52700	5.00	2635.00	
402-3190	19 mm SP	21600	5.00	1080.00	
402-4510	12.5 mm SP	13300	5.00	665.00	
			5.00		
			5.00		
			5.00		
			5.00		
			5.00		
			5.00		
			5.00		
			5.00		
			5.00		
			TMT =	**5030.00**	

PRICE ADJUSTMENT($)	$3,706,104.00

ASPHALT CEMENT PRICE ADJUSTMENT FOR BITUMINOUS TACK COAT(Surface Treatment 125% MAX)

APPLICABLE TO CONTRACTS CONTAINING THE 413 SPEC. SECTION 413.5.01 ADJUSTMENTS ASPHALT PRICE ADJUSTMENT FOR BITUMINOUS TACK COAT

http://www.dot.ga.gov/doingbusiness/Materials/Pages/asphaltcementindex.aspx

ENTER APL 614

ENTER APM 1381.5

125.00%	INCREASE ADJUSTMENT

Use this side for Asphalt Emulsion Only

L.I.N.	TYPE	ASPHALT EMULSION (GALLONS)

TMT =

REMARKS:

Use this side for Asphalt Cement Only

L.I.N.	TYPE	TACK (GALLONS)

TMT =

REMARKS:

MONTHLY PRICE ADJUSTMENT($)	

ADJUSTMENT SUMMARY

FUEL PRICE ADJUSTMENT *(ENGLISH 125% MAX)*

DIESEL PRICE ADJUSTMENT($)	$1,950,815.36
UNLEADED PRICE ADJUSTMENT($)	$637,399.65
ASPHALT CEMENT PRICE ADJUSTMENT (BITUMINOUS TACK COAT 125% MAX)	$87,660.24
400 / 402 ASPHALT CEMENT PRICE ADJUSTMENT 125% MAX	$3,706,104.00
ASPHALT CEMENT PRICE ADJUSTMENT FOR BITUMINOUS TACK COAT(Surface Treatment 125% MAX)	

REMARKS:

TOTAL ADJUSTMENTS	$6,381,979.25

DWM 10/08

DEPARTMENT OF TRANSPORTATION
STATE OF GEORGIA

INTERDEPARTMENT CORRESPONDENCE

FILE PROJECT No. EDS-545(37), Stephens
SR 17/SR 17 ALT FM CR 24/Scott Road to CR
190/Memorial Drive
P.I. No. 122260-

OFFICE Program Delivery

DATE 3/13/2012

FROM **Bobby Hilliard, State Program Delivery Engineer**

TO Lisa Myers, Project Review Engineer

SUBJECT REVISIONS TO PROGRAMMED COSTS

PROJECT MANAGER Brandon Kirby

MNGT LET DATE 9/21/2012

MNGT R/W DATE 5/18/2007

PROGRAMMED COST (TPro W/OUT INFLATION)		**LAST ESTIMATE UPDATE**
CONSTRUCTION	$Enter CST Cost	DATE Select Date
RIGHT OF WAY	$Enter ROW Cost	DATE Select Date
UTILITIES	$652,180	DATE 1/31/2011

REVISED COST ESTIMATES

CONSTRUCTION*	$
RIGHT OF WAY	$Enter Revised ROW Cost
UTILITIES**	$5,859,743

REIMBURSABLE UTILITY COST: $2,547,960

Attachments

cc: Genetha Rice - Singleton, Program Control Administrator

Revised: February 9, 2009

DEPARTMENT OF TRANSPORTATION
STATE OF GEORGIA

INTERDEPARTMENT CORRESPONDENCE

FILE EDS00-0545-00(037) Stephens Co.
P.I. No. 122260
SR 17 SR 17 Alt FM CR 24 Scott Rd to
CR 190 Memorial Dr.

OFFICE Gainesville

DATE March 13, 2012

AP

FROM Allen Ferguson
District Utilities Engineer

TO Brandon Kirby, Project Manager

SUBJECT UPDATED PRELIMINARY UTILITY COST (ESTIMATE)

As discussed, we are furnishing you with an UPDATED Preliminary Utility Cost estimate for the subject project.

FACILITY OWNER	NON-REIMBURSABLE	REIMBURSABLE
Georgia Power – Distribution	$ 0.00	$2,000,000.00
City of Toccoa	$2,794,139.00	$ 412,960.00
Windstream Communications	$ 281,366.00	$ 104,000.00
Northland Cable Television	$ 236,258.00	$ 31,000.00
TOTAL	$3,311,763.00	$2,547,960.00

Note: If the City of Toccoa requested and was approved for Utility Aid then their Non-Reimbursable would move to the Reimbursable amount. The City has not requested Utility Aid at this time.

If you have any questions, please contact Allen Ferguson at 770-532-5510.

RAF

C: Jeff Baker, State Utilities Engineer (email only)
Angie Robinson, Office of Financial Management (email only)
Rob Mabry, Area Engineer (email only)
File

Stream, Wetland, and Open Water Mitigation Cost Estimate

SR 17 Unit 37

Project Number: EDS00-0545-00(037)
P.I. Number: 122260
County: Stephens
Hydrologic Unit Code: HUC 03060102

Description

As proposed, stream impacts in HUC 03060102 would total 843 linear feet and require 5,410.95 stream mitigation credits. There are no proposed wetland and open water impacts for HUC 0306104. Credits would be purchased from a USACE approved mitigation bank, if available. The estimated cost of $85.00 per stream credit is based on historic prices.

Identification	Stream Impacts (lf)	Required Stream Mitigation Credits	Wetland & Open Water Impacts (ac)	Estmiated Mitigation Cost (@ $85 / credit)
HUC 03060102	843	5,410.95	0.0	$459,930.75

Attachment 4

V.E. Implementation Letter

DEPARTMENT OF TRANSPORTATION
STATE OF GEORGIA

INTERDEPARTMENT CORRESPONDENCE

FILE: EDS-545(20) & (37) Franklin/Stephens
P. I. No.: 122110 & 122260
S.R. 17 Widening/Reconstruction

OFFICE: Engineering Services

DATE: November 13, 2007

FROM: Brian Summers, P.E., Project Review Engineer RCW

TO: Babs Abubakari, P.E. State Consultant Design and Program Delivery Engineer

SUBJECT: **IMPLEMENTATION OF VALUE ENGINEERING STUDY ALTERNATIVES**

Recommendations for implementation of Value Engineering Study Alternatives are indicated in the table below. Incorporate alternatives recommended for implementation to the extent reasonable in the design of the project.

ALT No.	Description	Savings PW & LCC	Implement	Comments
EDS-545(20) --- P.I. No. 122110				
20-1	Use Asphalt Paving in lieu of Concrete Paving	$13,854,445	No	The recommended Pavement Design from the Office of Materials and Research is Concrete Pavement.
20-6	Use Walled Abutments in lieu of End Spans	$854,183	No	Approval of the Bridge Plans from the Railroad for this change would delay the schedule. This project is into the Final Plan Stage.
20-8	Shorten the left and right turn lane storage lengths	Design Suggestion	No	Based on Capacity Analysis, the Left Turn Storage Lengths shown are required.
20-9	Shorten the U-turn lane storage lengths	Design Suggestion	No	Based on Capacity Analysis, the U- Turn Storage Lengths shown are required.
20-10	Delete "channelized" turn feature, Use Type A if volume permits	$1,286,174	No	This is a safety concern. The offset Type "B" Median Opening is preferred.

ALT No.	Description	Savings PW & LCC	Implement	Comments
EDS-545(20) --- P.I. No. 122110 - continued				
20-11	Use Conspan™ in lieu of Concrete Box Culverts	$462,105	Yes	This should be done where possible. Further Geotechnical evaluations should be done to verify locations where this can be used.
20-12	Eliminate Cross Slope break for 2' shoulders (concrete pavement)	Design Suggestion	Yes	This should be done.
20-14	Review profile/cross slopes to eliminate ponding potential	Design Suggestion	Yes	This should be done.
20-15	Complete construction of all side roads prior to staging S.R. 328	Design Suggestion	Yes	This should be done.
20-17	Consider having approaching roadway section identical to the bridge section	Design Suggestion	No	This would result in increased cost since the bridge would have to be widened to match the roadway typical section.
20-18	Construct a left turn lane on Arrowhead Road	Design Suggestion	Yes	This should be done.
EDS-545(37) --- P.I. No. 122260				
37-2	Reduce Bridge width by providing a Davis Road Cul-de-sac	$461,632 (Original) $230,816 (Revised)	Yes	This will be a partial implementation. The bridge width will be reduced but the Davis Road access will be maintained.
37-3	Reduce Bridge width by using a Type A median crossover in lieu of a Type B median crossover at Eastanollee Road	$230,089	Yes	This should be done. Since VE Alternate "C-6" will also be implemented, a Type C Median Opening will be used.
37-4	Retain and overlay the existing pavement from Sta. 485+00± to Sta. 526+00±	$309,287	Yes	This should be done.
37-5	Use Keystone™ Walls in lieu of MSE Walls at Sta. 546+50±	$140,351	No	These walls are typically not used on GDOT Projects where the height exceeds 20'.

ALT No.	Description	Savings PW & LCC	Implement	Comments
EDS-545(37) --- P.I. No. 122260 - continued				
37-6	Retain and overlay the existing pavement from Sta. 400+00± to Sta. 485+00±	$658,361	Yes	This should be done.
37-7	Relocate Bike Lanes from roadway to Multi-Use Trail	Design Suggestion	No	The Design Office does not recommend due to safety concerns with Bikes and Pedestrians bring on the same facility.
37-8	Use Conspan™ in lieu of Concrete Box Culverts	$169,108	Yes	This should be done where possible. Further Geotechnical evaluations should be done to verify locations where this can be used.
37-10	Review profile/cross slopes to eliminate ponding potential	Design Suggestion	Yes	This should be done.

A meeting was held on November 5, 2007 to discuss the above recommendations. Keith Kunst with Arcadis, Nicoe Alexander with Consultant Design, and Brian Summers and Ron Wishon with Engineering Services were in attendance.

Approved: Dee MR **Date:** 4/16/08
Gerald M. Ross, P. E., Chief Engineer

BKS/REW

Attachments

c: Gus Shanine
Todd Long
Randy Hart
Mike Haithcock
Nicoe Alexander
Steve Gaston
Randy Davis
Rob Mabry
Ken Werho
Alexis John
Lisa Myers

PRECONSTRUCTION STATUS REPORT

PROJ ID	COUNTY	DESCRIPTION	MGMT. ROW DATE	SCHED DATE	MGMT. LET DATE
122110-	Franklin, Stephens	SR 17 FM S OF FRANKLIN COUNTY LINE TO N OF CR 24/SCOTT ROAD	Jun-07	Oct-09	Jul-09

EDS00-0545-00(020) **FIELD DIST:** 1
TIP #: **TWIN:** **US:**
MPO: Not Urban **EST DATE:** 11/15/07
MODEL YR:
PROJ MGR: Alexander, Nicoe **PROJ LENGTH:** 6.30
PROG TYPE: Reconstruction/Rehabilitation **TYPE WORK:** Widening
CONCEPT: NL 4R(MED 44) **LET RESP:** DOT Congressional Districts: 10

Phase	Approved	Proposed	Cost	Fund	Status
PE	1994	1994	2,035,021.65	EDS	AUTHORIZED
PE	2002	2002	2,356,800.00	GRVA	AUTHORIZED
ROW	2007	2007	7,963,000.00	L240	AUTHORIZED
CST	LR	LR	55,286,000.00	L240	PRECST

SCHED START	SCHED FINISH	ACTIVITY	ACTUAL START	ACT/EST FINISH	PCT	DISTRICT COMMENTS
		Define Project Concept	4/23/91	4/5/01	95	P.I.M. HELD 11-29-93
		Concept Meeting	5/23/91	5/23/91	100	NEED R/W REVISIONS FROM VE
		Concept Submittal and Review	11/8/91	11/8/91	100	STUDY SINCE DECEMBER
		Receive Preconstruction Concept Approval	5/7/93	5/7/93	100	(RWM 03/04/2008)
		Management Concept Approval Complete	**5/7/93**	**5/11/93**	**100**	
		Revise or Re-validate Approved Concept	1/15/05	4/19/05	100	
4/16/08	4/22/08	Value Engineering Study	11/14/06		83	
		Public Information Open House Held	7/1/96	7/1/96	100	
		Environmental Approval	11/1/94	7/13/00	94	
		Public Hearing Held	7/27/99	7/27/99	100	
		Mapping	8/3/94	8/23/94	100	
		Field Surveys/SDE	8/7/95	9/1/95	100	
		Preliminary Plans	**11/20/03**	**11/21/05**	**90**	
		Preliminary Bridge Design	5/10/05	11/8/05	100	
		Underground Storage Tanks	12/31/91	5/7/92	100	
		404 Permit Obtainment	9/5/03	4/16/04	100	
		PFPR Inspection	7/14/05	7/15/05	100	
		R/W Plans Preparation	11/21/05	6/5/06	100	
		R/W Plans Final Approval	**6/8/06**	**6/23/06**	**100**	
		L & D Report Development and Approval	4/18/06	4/25/06	100	
8/14/09	8/18/09	R/W Acquisition	7/4/06		38	
7/18/08	7/31/08	Stake R/W			0	
		Soil Survey	1/6/98	8/25/98	100	
		Bridge Foundation Investigation	6/22/06	6/30/06	100	
4/11/08	**6/5/08**	**Final Design**	**11/21/05**		**46**	
4/11/08	4/22/08	Final Bridge Plans Preparation	12/6/06		90	
6/27/08	6/30/08	FFPR Inspection			0	
7/14/08	7/25/08	FFPR Response			0	

BIKE PROVISIONS INCLUDED?: Y **MEASUREMENT** E **CONSULTANT:** C **UT EST:** $ 509,000.00

PDD: BOND. NEED ENVIR COMPLETE. 10/5/99. MARTIN BYPASS 5/16/01.
Bridge: WEI 03/02/07 CONSUL - ARCADIS
Design: NA| ARCADIS| Final Plans| 080114
EIS: FONSI|Apvd 7.13.00|RE 6.16.07|OnSchedLET|Nable(3.14.08)
LGPA: STEPHENS SGN 6/92 UTIL|MARTIN SGN P UTIL|TOCCOA SGN DO P UTIL 4/96|RESCISSION LETTER SENT TO MARTIN/TOCCOA/STEPHENS 7-22-05.
Planning: FED-AID PE ADDED TO STIP SO FHWA WILL REVIEW ENVIRONMENTAL DOC
Prog. Develop: EDS CST funds for $17.293M converterd to H240
Programming: PART OF EDS-545(37)/PI 122260|#1 12-02|#2 11-06
Railroad: HWELL
Traffic Op: SEND FFPR PLANS FOR REVIEW 9/30/05| $-!PFPR SENT 7/5/05 SZ/N
Utility: OCD SUE: NEED 2ND SUBMISSION PLANS 04/04/03
EMG: M1402 (H85-E/V88) DTM DOT=M/S; C=ADD S/D

R/W INFORMATION:
PREL PARCEL CT: 69 **TOTAL PARCEL CT:** 85 **ACQUIRED BY:** DOT **ACQ MGR:** Whitecotton, Brad
UNDER-REVIEW CT: 11 **RELEASED** 32 **OPT-PEND CT:** 1 **DEEDS CT:** 9 **COND-PEND CT:** 0 **COND-FILED CT:** 0
RW CERT DT: **ACQUIRED CT:** 9 **RELOCATION CT:** 16

PRECONSTRUCTION STATUS REPORT

PROJ ID	COUNTY	DESCRIPTION	MGMT. ROW DATE	SCHED DATE	MGMT. LET DATE
122260-	Stephens	SR 17/SR 17 ALT FM CR 24/SCOTT ROAD TO CR 190/MEMORIAL DRIVE	May-07	Sep-09	Jul-09

EDS00-0545-00(037) *FIELD DIST:* 1
TIP #: *TWIN:* *US:*
MPO: Not Urban *EST DATE:* 11/15/07
MODEL YR:
PROJ MGR: Alexander, Nicoe *PROJ LENGTH:* 3.13
PROG TYPE: Reconstruction/Rehabilitation *TYPE WORK:* Widening
CONCEPT: ADD 4R(M20/44) *LET RESP:* DOT

Phase	Approved	Proposed	Cost	Fund	Status
PE	1994	1994	535,170.75	EDS	AUTHORIZED
PE	2002	2002	1,842,863.13	GRVA	AUTHORIZED
ROW	2007	2007	20,243,300.00	RRB	AUTHORIZED
CST	LR	LR	20,259,000.00	EDS	PRECST

Congressional Districts: 10

SCHED START	SCHED FINISH	ACTIVITY	ACTUAL START	ACT/EST FINISH	PCT	DISTRICT COMMENTS
		Define Project Concept	12/18/96	12/31/96	95	
		Concept Meeting	12/31/96	12/31/96	100	
		Concept Submittal and Review	11/27/96	12/31/96	100	
		Receive Preconstruction Concept Approval	12/18/96	12/31/96	100	
		Management Concept Approval Complete	**1/9/97**	**1/9/97**	**100**	
4/11/08	7/10/08	Revise or Re-validate Approved Concept			0	
4/16/08	4/22/08	Value Engineering Study	11/14/06		83	
		Public Information Open House Held	5/31/95	5/31/95	100	
		Environmental Approval	11/1/94	7/13/00	94	
		Public Hearing Held	7/27/99	7/27/99	100	
		Mapping	4/25/05	5/15/05	100	
4/14/08	5/16/08	Field Surveys/SDE			0	
		Preliminary Plans	**11/20/03**	**3/24/06**	**89**	
		Preliminary Bridge Design	3/13/06	3/17/06	100	
4/16/08	4/15/08	Underground Storage Tanks	6/24/02		60	
		404 Permit Obtainment	9/5/03	4/16/04	100	
		PFPR Inspection	2/28/06	3/1/06	100	
		R/W Plans Preparation	3/27/06	5/2/06	100	
		R/W Plans Final Approval	**6/8/06**	**6/21/06**	**100**	
		L & D Report Development and Approval	4/18/06	4/25/06	100	
7/17/09	7/21/09	R/W Acquisition	7/4/06		38	
7/18/08	7/31/08	Stake R/W			0	
		Soil Survey	1/3/06	2/3/06	100	
		Bridge Foundation Investigation	6/21/06	11/13/06	100	
4/11/08	**7/8/08**	**Final Design**	**3/27/06**		**46**	
4/11/08	4/28/08	Final Bridge Plans Preparation	3/27/06		90	
7/30/08	7/31/08	FFPR Inspection			0	
8/14/08	8/27/08	FFPR Response			0	

BIKE PROVISIONS INCLUDED?: Y *MEASUREMENT* E *CONSULTANT:* C *UT EST:* $ 667,000.00

PDD: BOND. NEED ENVIR COMPLETE. FY01 CONSULTANT. 10/5/99.
Bridge: WEI 11/01/06
Design: NA| ARCADIS| Final Plans | 080114
EIS: FONSI|Apvd 7.13.00|RE 6.16.07|OnSchedLET|Nable(3.14.08)
LGPA: STEPHENS SGN DO UTIL 4-8-92|TOCCOA SGN DO UTIL 4-9-96|RESCISSION LETTER SENT TO STEPHENS & TOCCOA 5-25-05
Prog. Develop: CST STIP AMENDMENT #51 6-07
Programming: 626/PE=4-30-99|#1 12-02|#2 1-03|#3 3-07
Railroad: NO
Traffic Op: SEND PFPR PLANS FOR REV 9/30/05 |$-!pfpr sent 1/10/06 kw/nr
Utility: 2ND SUBMISSION PLANS TO PM 7 OF 8 10/10/07
EMG: M1481 (H85-E/V88) DTM; C=M/S/D

R/W INFORMATION:

PREL PARCEL CT: 65 *TOTAL PARCEL CT:* 94 *ACQUIRED BY:* DOT *ACQ MGR:* Whitecotton, Brad
UNDER-REVIEW CT: 25 *RELEASED* 32 *OPT-PEND CT:* 1 *DEEDS CT:* 13 *COND-PEND CT:* 1 *COND-FILED CT:* 0
RW CERT DT: *ACQUIRED CT:* 13 *RELOCATION CT:* 20

DEPARTMENT OF TRANSPORTATION
STATE OF GEORGIA

INTERDEPARTMENT CORRESPONDENCE

FILE: EDS-545(20) and EDS-545(37), Franklin, Stephens County
Widening and Relocation of SR 17 from 0.75 miles
South of Franklin County Line to CR 24/Scott Road
Widening and Reconstruction of SR 17 from
CR 24/Scott Road to Memorial Drive
PI's 122110 & 122260

OFFICE: Consultant Design

DATE: October 22, 2007

M. Babs Abubakari (MB)

FROM: Mohammed A. (Babs) Abubakari, P.E., State Consultant Design Engineer

TO: Brian Summers, P.E., Project Review Engineer

SUBJECT: **Responses to Value Engineering Study**

The VE team's recommendations are noted below in italics and Consultant Design's responses follow:

20-1 *Use asphalt paving instead of concrete paving.* Although the savings shown in the study comparing asphalt to concrete paving is accurate, it is just one of several factors used in the life-cycle cost analysis. The life-cycle analysis used by the Office of Materials and Research is attached. For those reasons mentioned in the attached document, Consultant Design does not recommend implementing this alternative.

20-6 *Use walled abutments in-lieu of end spans for SR 17 over old SR 17 and Norfolk Southern Railroad bridge.* As in 22-1, adjusting the profile will help with staging also. Consultant Design does recommend implementing this alternative.

20-8 *Shorten the left and right turn storage lengths.* These distances were calculated based on a 55 mph design speed throughout the corridor. For this reason, Consultant Design does not recommend implementing this design suggestion.

20-9 *Shorten the U-turn storage lengths.* These distances were calculated based on a 65 mph design speed throughout the corridor. For this reason, Consultant Design does not recommend implementing this design suggestion.

20-10 *Delete "channelized" turn feature, use "Type A" median opening if volume permits.* GDOT has programmed projects throughout the state to eliminate Type A median openings. This design should be consistent with other projects around the State. For this reason, Consultant Design does not recommend implementing this alternative.

20-11 *Use "Conspan" structures in lieu of concrete box culverts.* Although there will be some cost savings involved with this alternative, Conspan segments will require foundation

investigations to be performed to determine if a savings can be realized. Considering that there have been projects in this state where Conspan segments have required pile foundations, specific location investigations must be performed before a decision can be made. Depending on the foundation requirements, Conspan segments may be appropriate for the multi-barreled locations, however we do not feel that they would be warranted at single-barreled culvert locations since precast box segments could just as easily be used. Further discussion will be required between the Project Manager, the consultant, the Office of Bridge Design, and the Office of Materials & Research. For these reasons, Consultant Design will have to look at this further before we can recommend implementing this alternative.

20-12 *Eliminate cross slope break for 2' shoulders (concrete pavement).* This design suggestion will be implemented as part of the design process.

20-14 *Review profile/cross slopes to eliminate ponding potential.* This design suggestion will be confirmed in the design process.

20-15 *Complete construction of all side roads prior to staging SR 328.* This design suggestion will be confirmed during the Staging Process.

20-17 *Consider having approaching roadway section identical to the bridge section.* The bridge and roadway section were designed in accordance to GDOT policy. This design allows for a better safety approach transition from roadway to bridge. For these reasons, Consultant Design does <u>not</u> recommend implementing this design suggestion.

20-18 *Construct a left turn lane on Arrowhead Drive.* This design suggestion will be implemented as part of the design process.

37-2 *Reduce bridge width by providing a Davis Road cul-de-sac.* The bridge width would be reduced by eliminating the Davis Road intersection with SR 17, however, this may be difficult to implement. Although there is adequate alternate routing using Hickory Log Circle and Old Mill Bridge Road, Davis Road has been shown to have a right in right out entrance dating back to the original concepts and Public Hearing a decade ago. This Office will like to have input from the District before this suggestion may be implemented. This recommendation would not be necessary if alternative 37-6 is implemented with a raised median, since that would narrow the bridge and utilize one structure rather than two. Left-turn lanes would be of no consequence in that situation.

37-3 *Reduce Bridge Width by using a Type A in-lieu of Type B intersection at Eastanollee Rd.* GDOT has programmed projects throughout the state to eliminate Type A median openings. This design should be consistent with other projects around the State. For this reason, Consultant Design does <u>not</u> recommend implementing this alternative.

37-4 *Retain and Overlay the existing pavement from Sta 485+/- to Sta 526+/-.* Considering that no right-of-way has been acquired on this project yet, this change could be implemented with no adverse affect to construction schedule as long as design revision begins in the next few months. If the design speed is lowered to 55mph, strong consideration should be given to utilizing a raised median like the current 55 mph typical section. While this would require median curb and gutter, the section is completely in tangent, so median drainage and inside shoulder base and paving would be reduced or eliminated. In addition,

approximately 24 feet of required right-of way would be eliminated, cross drain structures and culverts would be shortened, and base and paving at median turn lanes would be reduced. For these reasons, Consultant Design does recommend implementing this alternative.

37-5 *Use Keystone in-lieu of MSE walls at Sta 546+50 +/-.* Current Georgia DOT policy limits the use of modular block wall (Keystone) to heights less than 20 feet. The proposed wall at this location shall be higher than 20 feet and will be required to stay as designed. For this reason, Consultant Design does not recommend implementing this alternative.

37-6 *Retain and Overlay the existing pavement from Sta 400+/- to Sta 485+/-.* Considering that no right-of-way has been acquired on this project yet, this change could be implemented with no adverse affect to construction schedule as long as design revision begins in the next few months. If the design speed is lowered to 55mph, strong consideration should be given to utilizing a raised median like the current 55 mph typical section. Impacts and benefits would be similar to those in Alternative 37-4, however, there would be significant additional cost savings in the reduction of bridge width at the Eastanollee Creek and Oggs Branch bridges. In addition, approximately 24 feet of required right-of way would be eliminated, and Alternatives 37-2 and 37-3 would not be necessary since their benefits would have already been realized by this change. The resulting cost savings from this change would be much higher than suggested and potentially greater than $1,500,000. For these reasons, Consultant Design does recommend implementing this alternative.

37-7 *Relocate bike lanes from roadway to a multi-use trail.* it is safer for pedestrian traffic to be separated from bike traffic. For this reason, Consultant Design does not recommend implementing this design suggestion.

37-8 *Use "Conspan" structures in lieu of concrete box culverts.* Due to environmental commitments, a bridge is requested at this location. The Bridge Foundation Investigation will determine the type of bridge needed at this location. With the existing skew angle of the structure, a bridge may be more suitable. For these reasons, Consultant Design will compare the costs of these two alternatives and go with the most cost-effective.

37-10 *Review profile cross slopes to eliminate ponding potential.* This design suggestion will be confirmed in the design process.

If you have any questions, please call Nicoe Alexander at (404) 463-6135.

MBA:MAH:JNA

cc: Lisa Myers

Attachment 5

Bridge Inventory Sheets

Processed Date:3/19/2012

Parameters: Bridge Serial Num

Bridge Inventory Data Listing

Structure ID:257-0004-0 **Stephens** **SUFF. RATING:** 88.84

Location & Geography

Structure ID:	257-0004-0
200 Brdge Information:	07
*6A Feature Int:	EASTANOLLEE CREEK
*6B Critical Bridge:	0
*7A Route No Carried:	SR00017
*7B Facility Carried:	SR 17
9 Location:	3.8 MI NW OF AVALON
2 Dot District:	1
207 Year Photo:	2011
*91 Inspection Frequency:	24 Date: 02/16/2011
92A Fract Crit Insp Freq:	0 Date: 02/01/1901
92B Underwater Insp Freq:	0 Date: 02/01/1901
92C Other Spc. Insp Freq:	0 Date: 02/01/1901
* 4 Place Code:	00000
*5 Inventory Route(O/U):	1
Type:	3
Designation:	1
Number:	00017
Direction:	0
*16 Latitude:	34 - 31.8343 HMMS Prefix:SR
*17 Longtitude:	83 - 15.1565 HMMS Suffix:00 MP:5.79
98 Border Bridge:	000%Shared:00
99 ID Number:	000000000000000
*100 STRAHNET:	0
12 Base Highway Network:	1
13A LRS Inventory Route:	2571001700
13B Sub Inventory Route:	0
101 parellel Structure:	N
*102 Direction of Traffic:	2
*264 Road Inventory Mile Post:	005.79
*208 Inspection Area:	1 Initials: EFP
Engineer's Initials:	gmc
* Location ID No:	257-00017D-005.79N

*104 Highway System:	1
*26 Functional Classification:	02
*204 Federal Route Type:	F No: 00502
105 Federal Lands Highway:	0
*110 Truck Route:	0
2006 School Bus Route:	1
217 Benchmark Elevation:	0000.00
218 Datum:	0
*19 Bypass Length:	04
*20 Toll:	3
*21 Maintanance:	01
*22 Owner:	01
*31 Design Load:	2
37 Historical Significance:	5
205 Congressional District:	10
27 Year Constructed:	1937
106 Year Reconsrtucted:	0000
33 Bridge Medium:	0
34 Skew:	00
35 Structure Flared:	0
38 Navigation Control:	0
213 Special Steel Design:	0
267 Type of Paint:	0
*42 Type of Service On:	1
Type of Service Under:	5
214 Movable Bridge:	0
203 Type Bridge:	Q
259 Pile Encasement	3
*43 Structure Type Main:	1 19
45 No.Spans Main:	004
44 Structure Type Appr:	0 00
46 No Spans Appr:	0000
226 Bridge Curve Horz	0 Vert: 0
111 pier Protection	0
107 Deck Structure Type:	N
108 Wearing Structure Type:	N
Membrane Type:	N
Deck Protection:	N

Signs & Attachments

225 Expansion Joint Type:	00
242 Deck Drains:	0
243 Parapet Location:	0
Height:	0
Width:	0
238 Curb Height:	0
Curb Material:	0
239 Handrail	0 0
*240 Medium Barrier Rail:	0
241 Bridge Median Height:	0
* Bridge Median Width:	0
230 Guardrail Loc. Dir. Rear:	6
Fwrd:	6
Oppo. Dir. Rear:	0
Oppo. Fwrd:	0
244 Aproach Slab	0
224 Retaining Wall:	0
233Posted Speed Limit:	45
236 Warning Sign:	0.00
234 Delineator:	1.00
235 Hazzard Boards:	0
237 Utilities Gas:	00
Water:	00
Electric:	00
Telephone:	00
Sewer:	00
247 Lighting Street:	0
Navigation:	0
Aerial:	0
*248 County Continuity No.:	00

"The Information contained in this File/Report is the property of GDOT and may not be released to any other party without the written consent of the Data Custodian. Please dispose of this information by shredding or other confidential method."

Bridge Inventory Data Listing

Structure ID:257-0004-0

Programming Data

201 Project No:	F-60 REOP
202 Plans Available:	1
249 Prop Proj No:	EDS-545 (37)
250 Approval Status:	0000
251 PI Number:	122260-
252 Contract Date:	02/01/2009
260 Seismic No:	00000
75 Type Work:	00 0
94 Bridge Imp: Cost:	$0
95 Roadway Imp. Cost:	0
96 Total Imp Cost:	0
76 Imp Length:	000000
97 Imp Year:	0000
114Furure ADT:	016680 Year:2027

Hydralic Data

215Waterway Data:	
High Water Elev:	0000.0 Year:1900
Flood Elev:	0000.0 Freq:00
Avg Streambed Elev:	0000.0
Drainage Area:	00000
Area of Opening:	000400
113 Scour Critical	8
216Water Depth:	02.4 Br.Height:09.6
222Slope Protection:	0
221Slope Protection	0 Fwd:0
219Fender System	0
220Dolphin:	0
223Current Cover:	3
Type:	1
No. Barrels:	4
* Width:	10.00 Height:10.00
* Length:	35 Apron:0
265 U/W Insp. Area	0 Diver:ZZZ
Location ID No:	257-00017D-005.79N

Measurements:

*29ADT	011120 Year:2007
109%Trucks:	0
* 28 Lanes On:	02 Under:00
210 No. Tracks On:	00 Under:00
* 48 Max. Span Length	0010
* 49 Structure Length:	44
51 Br. Rwdy. Width	0.00
52 Deck Width:	0.00
* 47 Tot. Horiz. Cl:	30
50 Curb / Sidewalk Width	0.00 / 0.00
32 Approach Rdwy. Width	032
*229 Shoulder Width:	
Rear Lt:	4.20 Type:2 Rt:4.60
Fwd. Lt:	3.90 Type:2 Rt:4.40
Permanent Width:	
Rear:	23.30 Type:2
	23.70 Type:2
Intersaction Rear:	1 Fwd: 1
36Safety Features Br. Rail:	1
Transition:	1
App. G. Rail:	1
App. Rail End:	1
53 Minimum Cl. Over:	99' 99 "
Under:	
*228 Minimum Vertical Cl	
Act. Odm Dir::	99' 99"
Oppo. Dir:	99' 99"
Posted Odm. Dir:	00' 00"
Oppo. Dir:	00' 00"
55 Lateral Undercl. Rt:	N 0 0
56 Lateral Undercl. Lt:	0.00
*10 Max Min Vert Cl:	99' 99" Dir:0
39 Nav Vert Cl:	000 Horiz:0000
116 Nav Vert Cl Closed:	000
245 Deck Thickness Main	0.00
Deck Thick Approach:	0.00
246 Overlay Thickness:	0.00
212 Year Last Painted:	Sup:0000Sub:0000

65 Inventory Rating Mathod:	5
63 Operating Rating Method:	5
66 Inventory Type:	2 Rating: 27
64 Operating Type:	2 Rating: 27
231Calculated Loads:	
H-Modified:	00 0
HS-Modified:	00 0
Type 3:	00 0
Type 3s2:	00 0
Timber:	00 0
Piggyback:	00 0
261 H Inventory Rating:	15
262 H Operating Rating	25
67 Structural Evaluation:	6
58 Deck Condition:	N
59 Superstructure Condition:	N
* 227 Collision Damage:	0
60A Substructure Condition:	N
60B Scour Condition:	6
60C Underwater Condition	N
71 Waterway Adequacy:	8
61 Channel Protection Cond.:	7
68 Deck Geometry:	N
69 UnderClr. Horz/Vert:	N
72 Appr. Alignment:	8
62 Culvert:	6

Posting Data

70 Bridge Posting Required	5
41 Struct Open, Posted, CL:	A
* 103 Temporary Structure:	0
232 Posted Loads	
H-Modified:	00
HS-Modified:	00
Type 3:	00
Type 3s2:	00
Timber:	00
Piggyback	00
253 Notification Date:	02/01/1901
258 Fed Notify Date:	2/1/1901 12:00:00AM

"The Information contained in this File/Report is the property of GDOT and may not be released to any other party without the written consent of the Data Custodian. Please dispose of this information by shredding or other confidential method."

Processed Date:3/19/2012

Parameters: Bridge Serial Num

Bridge Inventory Data Listing

Structure ID:257-0005-0 **Stephens** **SUFF. RATING:** 62.62

Location & Geography

Structure ID:	257-0005-0
200 Brdge Information:	06
*6A Feature Int:	OGGS BRANCH
*6B Critical Bridge:	0
*7A Route No Carried:	SR00017
*7B Facility Carried:	SR 17
9 Location:	5.2 MI SE OF TOCCOA
2 Dot District:	1
207 Year Photo:	2011
*91 Inspection Frequency:	24 Date: 02/16/2011
92A Fract Crit Insp Freq:	0 Date: 02/01/1901
92B Underwater Insp Freq:	0 Date: 02/01/1901
92C Other Spc. Insp Freq:	0 Date: 02/01/1901
* 4 Place Code:	00000
*5 Inventory Route(O/U):	1
Type:	3
Designation:	1
Number:	00017
Direction:	0
*16 Latitude:	34 - 32.0975 HMMS Prefix:SR
*17 Longtitude:	83 - 15.5858 HMMS Suffix:00 MP:6.32
98 Border Bridge:	000%Shared:00
99 ID Number:	000000000000000
*100 STRAHNET:	0
12 Base Highway Network:	1
13A LRS Inventory Route:	2571001700
13B Sub Inventory Route:	0
101 parellel Structure:	N
*102 Direction of Traffic:	2
*264 Road Inventory Mile Post:	006.32
*208 Inspection Area:	1 Initials: EFP
Engineer's Initials:	gmc
* Location ID No:	257-00017D-006.32N

*104 Highway System:	1
*26 Functional Classification:	02
*204 Federal Route Type:	F No: 00502
105 Federal Lands Highway:	0
*110 Truck Route:	0
2006 School Bus Route:	1
217 Benchmark Elevation:	0000.00
218 Datum:	0
*19 Bypass Length:	01
*20 Toll:	3
*21 Maintanance:	01
*22 Owner:	01
*31 Design Load:	2
37 Historical Significance:	5
205 Congressional District:	10
27 Year Constructed:	1920
106 Year Reconsrtucted:	1936
33 Bridge Medium:	0
34 Skew:	00
35 Structure Flared:	0
38 Navigation Control:	0
213 Special Steel Design:	0
267 Type of Paint:	0
*42 Type of Service On:	1
Type of Service Under:	5
214 Movable Bridge:	0
203 Type Bridge:	A
259 Pile Encasement	3
*43 Structure Type Main:	1 01
45 No.Spans Main:	002
44 Structure Type Appr:	0 00
46 No Spans Appr:	0000
226 Bridge Curve Horz	0 Vert: 0
111 pier Protection	0
107 Deck Structure Type:	1
108 Wearing Structure Type:	6
Membrane Type:	0
Deck Protection:	8

Signs & Attachments

225 Expansion Joint Type:	02
242 Deck Drains:	0
243 Parapet Location:	0
Height:	0
Width:	0
238 Curb Height:	1
Curb Material:	1
239 Handrail	1 1
*240 Medium Barrier Rail:	0
241 Bridge Median Height:	0
* Bridge Median Width:	0
230 Guardrail Loc. Dir. Rear:	3
Fwrd:	3
Oppo. Dir. Rear:	0
Oppo. Fwrd:	0
244 Aproach Slab	3
224 Retaining Wall:	0
233Posted Speed Limit:	45
236 Warning Sign:	1.00
234 Delineator:	1.00
235 Hazzard Boards:	1
237 Utilities Gas:	00
Water:	00
Electric:	00
Telephone:	00
Sewer:	00
247 Lighting Street:	0
Navigation:	0
Aerial:	0
*248 County Continuity No.:	00

"The Information contained in this File/Report is the property of GDOT and may not be released to any other party without the written consent of the Data Custodian. Please dispose of this information by shredding or other confidential method."

Bridge Inventory Data Listing

Structure ID:257-0005-0

Programming Data

201 Project No:	F-60 REOP
202 Plans Available:	4
249 Prop Proj No:	BHN-050-2 (20)
250 Approval Status:	0000
251 PI Number:	121360-
252 Contract Date:	02/01/2009
260 Seismic No:	00000
75 Type Work:	34 1
94 Bridge Imp: Cost:	$96
95 Roadway Imp. Cost:	315
96 Total Imp Cost:	466
76 Imp Length:	001364
97 Imp Year:	1990
114Furure ADT:	016680 Year:2027

Hydralic Data

215Waterway Data:	
High Water Elev:	0000.0 Year:1900
Flood Elev:	0000.0 Freq:00
Avg Streambed Elev:	0000.0
Drainage Area:	00000
Area of Opening:	000000
113 Scour Critical	U
216Water Depth:	1.1 Br.Height:13
222Slope Protection:	0
221Slope Protection	0 Fwd:0
219Fender System	0
220Dolphin:	0
223Current Cover:	000
Type:	0
No. Barrels:	0
* Width:	0.00 Height:0.00
* Length:	0 Apron:0
265 U/W Insp. Area	0 Diver:ZZZ
Location ID No:	257-00017D-006.32N

Measurements:

*29ADT	011120 Year:2007
109%Trucks:	0
* 28 Lanes On:	02 Under:00
210 No. Tracks On:	00 Under:00
* 48 Max. Span Length	0022
* 49 Structure Length:	44
51 Br. Rwdy. Width	23.90
52 Deck Width:	26.40
* 47 Tot. Horiz. Cl:	24
50 Curb / Sidewalk Width	0.50 / 0.50
32 Approach Rdwy. Width	032
*229 Shoulder Width:	
Rear Lt:	4.50 Type:2 Rt:4.20
Fwd. Lt:	4.50 Type:2 Rt:4.00
Permanent Width:	
Rear:	23.40 Type:2
	23.50 Type:2
Intersaction Rear:	0 Fwd: 1
36Safety Features Br. Rail:	2
Transition:	2
App. G. Rail:	2
App. Rail End:	2
53 Minimum Cl. Over:	99' 99 "
Under:	
*228 Minimum Vertical Cl	
Act. Odm Dir::	99' 99"
Oppo. Dir:	99' 99"
Posted Odm. Dir:	00' 00"
Oppo. Dir:	00' 00"
55 Lateral Undercl. Rt:	N 0 0
56 Lateral Undercl. Lt:	0.00
*10 Max Min Vert Cl:	99' 99" Dir:0
39 Nav Vert Cl:	000 Horiz:0000
116 Nav Vert Cl Closed:	000
245 Deck Thickness Main	18.00
Deck Thick Approach:	0.00
246 Overlay Thickness:	1.40
212 Year Last Painted:	Sup:0000Sub:0000

65 Inventory Rating Mathod:	2
63 Operating Rating Method:	2
66 Inventory Type:	2 Rating: 23
64 Operating Type:	2 Rating: 23
231Calculated Loads:	
H-Modified:	20 0
HS-Modified:	25 0
Type 3:	28 0
Type 3s2:	40 0
Timber:	36 0
Piggyback:	40 0
261 H Inventory Rating:	15
262 H Operating Rating	27
67 Structural Evaluation:	5
58 Deck Condition:	6
59 Superstructure Condition:	6
* 227 Collision Damage:	0
60A Substructure Condition:	6
60B Scour Condition:	6
60C Underwater Condition	N
71 Waterway Adequacy:	8
61 Channel Protection Cond.:	5
68 Deck Geometry:	2
69 UnderClr. Horz/Vert:	N
72 Appr. Alignment:	6
62 Culvert:	N

Posting Data

70 Bridge Posting Required	5
41 Struct Open, Posted, CL:	A
* 103 Temporary Structure:	0
232 Posted Loads	
H-Modified:	00
HS-Modified:	00
Type 3:	00
Type 3s2:	00
Timber:	00
Piggyback	00
253 Notification Date:	02/01/1901
258 Fed Notify Date:	2/1/1901 12:00:00AM

"The Information contained in this File/Report is the property of GDOT and may not be released to any other party without the written consent of the Data Custodian. Please dispose of this information by shredding or other confidential method."