VALUE ENGINEERING REPORT

US 441 / SR 15 Widening and Median Construction
EDS00-0441-00(028); PI No.122090
Rabun County

July 14, 2009

OWNER:

Georgia Department of Transportation
600 West Peachtree Street
Atlanta, GA 30308
(404.631.1770)

VALUE ENGINEERING CONSULTANT:

MACTEC Engineering and Consulting, Inc.
3200 Town Point Drive NW, Suite 100
Kennesaw, GA 30144
(770.421.3346)

TABLE OF CONTENTS

VALUE ENGINEERING REPORT

US 441 / SR 15 Widening and Median Construction
EDS00-0441-00(028); PI No. 122090
Rabun County

July 14, 2009

Executive Summary **1**

Introduction 2
Considerations 3
Results Obtained 3
Recommendation Highlights 4
Summary of Potential Cost Savings 7

Study Identification **9**

Team Member List 10
Project Description 10
Kick-Off Meeting/Design Presentation 11
Project Vicinity Map 13
Project Location Map 14
Project Limits 15

Value Engineering Recommendations **16**

Appendix **69**

Cost Model 69
Function Analysis 70
Creative Ideas / Idea Evaluation 71
VE Study Sign-In Sheet 74

EXECUTIVE SUMMARY

EXECUTIVE SUMMARY

VALUE ENGINEERING REPORT

US 441 / SR 15 Widening and Median Construction
EDS00-0441-00(028); PI No. 122090
Rabun County

July 14, 2009

Introduction

This report summarizes the results of a value engineering (VE) study conducted on June 22-25, 2009 at GDOT offices in Atlanta, GA, by a four person VE Team. The design team included personnel from KCI Technologies, Inc. and GDOT project management. The project currently has approved Concept Design Reports dated January 2007, as well as a Concept Validation Report prepared by KCI.

US 441 is the primary north-south corridor in northeast Georgia and serves as a major tourist route through the Great Smokey and Blue Ridge Mountains. The project begins at the northern limit of Clayton and continues northward 7.4 miles to the North Carolina State Line. The proposed widening and construction of a raised median would reduce congestion and enhance traffic flow. This is the last section of this route in northern Georgia to be widened before the North Carolina State line.

The total estimated project cost includes $50.69 million in construction costs in addition to $62.00 million in right of way for a total cost of $112.69 million. Right of way includes factors for scheduling contingency, court costs and market adjustment factors. Programmed costs were obtained from the GDOT Preconstruction Status Report that included an estimated project let date of February 2014. These costs included utility cost ($1,399,000) and a markup of Construction items of 70.24% and of ROW of 62.046% for a grand project total of $188,162,000. These markups will be seen on the cost worksheets for the VE recommendations.

This report presents the Team's recommendations and all back-up information, for consideration by the decision-makers. This **Executive Summary** includes a brief description of each

recommendation. The **Study Identification** section contains information about the project and the team. The **Recommendations** section presents a more detailed description and support information about each recommendation. The **Appendix** includes a complete record of the Team's activities and findings as well as the meeting attendees sign in sheet. The reader is encouraged to review all sections of the report in order to obtain a complete understanding of the VE process.

Considerations

During the presentation by the design team on the project overview, the VE Team was alerted to the stakeholder's constraints on this project which include:

- The current plan through the City of Dillard is to reduce the median to a 6 foot width to minimize impact on adjacent historic / commercial properties. This cannot be widened and has been based on extensive involvement with the City.
- There is an extensive number of properties in the vicinity of this project that are on the National Register of Historic Places (22 total). These should be avoided.
- 25 streams will be crossed by the project resulting in 1,355 linear feet of impact to streams. Three streams will require stream buffer variances. In addition, throughout the project there are lengthy stream reaches adjacent to the right of way where impacts are not anticipated. These should be avoided.

Results Obtained

The VE Team generated over 20 ideas in the creative session and presented 13 of these as recommendations for consideration by GDOT. The recommendations involve: use steeper slopes with guard rail to reduce ROW; use permanent easements in lieu of ROW where possible; reduce lane widths; combine sidewalks with bike lanes in a multipurpose trail; reduce urban shoulder width; use a 5 lane typical section; reduce median width; use more MSE walls; do not widen the Little Tennessee River bridge; use asphalt sidewalks; and delete the edge stripe next to concrete gutter.

Neglecting the overlapping nature of the recommendations as much as possible, the net total of all the recommendations have the potential to reduce project costs by as much as $61,282,000 of capital cost in programmed dollars while continuing to provide the required functionality. This is shown in the last column of the Summary Table that follows the summary description below.

A brief presentation of these recommendations was conducted on June 25th with the following in attendance: Lisa Myers, Ron Wishon and Matt Sanders from GDOT Engineering Services; Hiral Patel, David Norwood and Bobby Hilliarde of GDOT OPD; Michael Haithcock, GDOT Program Delivery; Mike Stoltzfus, Greg Nichols, Stan Hicks, and Janet Crouse of KCI and the VE Team: Dave Wohlscheid, Alex Wiley, Dan Cogan and Aruna Sastra.

Recommendation Highlights

Idea A-2 - Use 2:1 slopes with guardrail

The current design proposes 4:1 slopes to eliminate guardrail. Using 2:1 and guardrail reduces necessary R/W and earthwork and results in a substantial net savings. Adequate safety is still provided with the anticipated 45 mph posted speed.

Potential programmed savings if accepted is $552,200.

Idea A-3 – Use permanent easements vs right-of-way takes

In the areas past the toe of slope in cut sections and shoulder breakpoint in fill sections, use permanent easements for R/W acquisition in lieu of total purchase. According to the ROW department, this can save approximately 40% in acquisition costs.

Potential programmed savings could be $33,640,000.

Idea B-1 – Reduce lane widths from 12 to 11 feet

This proposes reducing all 4 travel lanes to 11 feet in width. This is feasible as the proposed speed is to be 45 mph. This saves in earthwork, pavement and R/W costs.

Potential programmed savings if accepted is $2,723,000

Idea B-2 – Use multipurpose areas for bike lanes and sidewalks

A 4 foot bike lane is included in both directions where curb and gutter is includes, and one on the shoulder for rural sections. The proposed idea is to remove the bike lanes from the pavement and place them with the sidewalk area in a 10 wide multi-use space. Removing them from the pavement area with projected 16% truck use will improve safety and save in pavement thickness items.

If implemented, potential programmed savings is $6,205,000.

Idea B-3 – Reduce urban shoulders from 16 to 12 feet

The 12 foot wide shoulder will have adequate room to 2.5 ft. curb and gutter; 5 ft. sidewalk; 2 ft. grass buffer between curb and sidewalk and a 2.5 ft shoulder from sidewalk to shoulder break. Right-of-way and earthwork are reduced at a substantial savings. This could not be combined with Item B-2 as there is not adequate room.

Potential savings is $5,755,000.

Idea B-4 – Use a 5 lane typical section through the entire project

A five lane section is currently in place in the section to the south of this project (just recently improved by GDOT) as well as the section to the north in North Carolina. With a 14 wide center lane, 12 foot travel lanes and a posted speed of 45 mph, all current and future AADT traffic demands could be accommodated. The total roadway section is reduced for a substantial savings.

Potential savings if accepted is $2,882,000.

Idea D-1 – Use a 17 foot raised median in lieu of the 20 foot original design

This will function the same as the 20 foot median. At the left turn bays it will provide an area 1′ wide between the face of curbs to shield the turn lane. A 3 foot savings in right-of-way and earthwork will result in the savings shown below.

Potential savings if implemented is $2,871,000.

Idea D-3 – Use a 16 foot raised median in lieu of the 20 foot original design

As in D-1, this results in a savings in right-of-way and earthwork. The left turn lane can be accommodated with a 2 foot raised median by reducing the gutter width to 1′ in the adjacent travel way and eliminate the gutter in the turn lane

Savings potential if accepted is $3,828,000.

Idea H-1 – Increase number and type of retaining walls in lieu of extensive cuts and fill with extensive right-of-way purchases

This idea proposes 6 locations for walls in addition to the three proposed under the original design. It appears to be cost effective to build the walls in lieu of buying the land due to the extensive earthwork needed for this project. This is true even if Idea A-3 is accepted only with a lesser savings.

If implemented, savings would be $32,280,000.

Idea J-2 – Do not widen the Little Tennessee Bridge

The original design calls for a widening of this bridge of approximately 1 foot. This is not feasible, and the existing bridge has a high sufficiency rating of 88. The proposed median can be reduced 1 ft. in width in this area and no work be performed on the bridge.

Potential savings is $290,700.

Idea J-3 – Use asphalt sidewalks with GAC base in lieu of concrete

The proposed alternate to concrete would save substantial initial costs for this project. In areas adjacent to trees, asphalt performs better than concrete as it will flex around roots vs cracking / popping up as concrete does. With the limited loading involved, asphalt should have a similar lifespan to concrete with the total cost of maintenance being about equal.

Potential savings is $1,042,000.

Idea J-4 – Delete 5 inch solid white pavement edge stripe next to concrete gutter

The elimination of white striping on black asphalt next to bleached white concrete curb and gutter does not diminish directional or safety concerns. Past GDOT policy did not include edge line striping in typical curb and gutter roadway sections.

Savings potential is $61,300.

US 441 / SR 15 Widening and Median Construction
EDS00-0441-00(028), PI No. 122090
Rabun County

SUMMARY OF POTENTIAL COST SAVINGS

ITEM No.	CREATIVE IDEA DESCRIPTION	ORIGINAL INITIAL COST	PROPOSED INITIAL COST	INITIAL COST SAVINGS	FUTURE SAVINGS	TOTAL PRESENT WORTH SAVINGS	Maximum Savings in Combination with other VE proposals
A	**Right of Way**						
A-2	Use 2:1 slopes with guardrail	904,000	351,800	552,200	-0-	552,200	552,200
A-3	Use permanent easements vs. right of way	84,130,000	50,490,000	33,640,000	-0-	33,640,000	33,640,000
B	**AC Pavement**						
B-1	Reduce lane widths from 12 feet to 11 feet	2,723,000	-0-	2,723,000	-0-	2,723,000	2,723,000
B-2	Use wide sidewalks/multiuse trails in urban shoulder section in lieu of sidewalks and bicycle lanes	7,747,000	1,542,000	6,205,000	-0-	6,205,000	-0-
B-3	Reduce urban shoulders from 16′ to12′	5,755,000	-0-	5,755,000	-0-	5,755,000	5,755,000
B-4	Use a 5 lane typical section through the entire length of the project	8,500,000	5,825,000	2,675,000	-0-	2,675,000	-0-
D	**Concrete Median**						
D-1	Reduce raised median from 20′ to 17′	2,871,000	-0-	2,871,000	-0-	2,871,000	-0-

US 441 / SR 15 Widening and Median Construction
EDS00-0441-00(028), PI No. 122090
Rabun County

SUMMARY OF POTENTIAL COST SAVINGS

ITEM No.	CREATIVE IDEA DESCRIPTION	ORIGINAL INITIAL COST	PROPOSED INITIAL COST	INITIAL COST SAVINGS	FUTURE SAVINGS	TOTAL PRESENT WORTH SAVINGS	Maximum Savings in Combination with other VE proposals
D-3	Reduce median width from 20′ to 16′	3,828,000	-0-	3,828,000	-0-	3,828,000	3,828,000
H	**MSE walls**						
H-1	Increase number and type of walls in lieu of purchasing right-of-way	44,890,000	12,610,000	32,280,000	-0-	32,280,000	13,390,000
J	**Other**						
J-1	Evaluate traffic control cost	Design Consideration				N/A	
J-2	Do not widen the Little Tennessee River bridge	290,700	-0-	290,700	-0-	290,700	290,700
J-3	Use asphalt sidewalks	1,428,000	386,000	1,042,000	-0-	1,042,000	1,042,000
J-4	Delete white edge stripe on pavement	61,300	-0-	61,300	-0-	61,300	61,300
	TOTAL POTENTIAL SAVINGS						**$61,282,000**

STUDY IDENTIFICATION

STUDY IDENTIFICATION

US 441 / SR 15 Widening and Median Construction	Dates: June 22-25, 2009
Location: GDOT HQ - Atlanta	

VE Team Members

Name:	Discipline:	Organization:	Telephone:
David Wohlscheid	VE Team Leader	MACTEC	703-471-8383
Alex Wiley	Highway Design	MACTEC	770-421-3481
Aruna Sastry	Structural	Sastry & Associates	678-366-9375
Dan Cogan	Highway Construction	KEA Group	404-290-6424

Project Description

The project is located in north central Georgia approximately 100 miles northeast of Atlanta. Initial design ADT (2013) is 17,700 VPD and projected ADT (2033) is 29,600 with 16% trucks. The proposed design and posted speed throughout the corridor is 45 mph.

The proposed construction will include a 20 foot raised median typical section constructed from the beginning terminus of the project to Mountain City's southern limits and from approximately SR 246/Highlands Road to the North Carolina state line. Proposed right of way for this area varies from 150 to 450 feet. An urban 20 foot raised median typical section with 4 foot bike lanes would be constructed from Mountain City's southern city limits to CR220/Betty Creek Road and from CR 6/Greenwood Road to SR 246/Highlands Road on proposed right of way varying from 130 to 430 feet. An urban 8 foot raised median typical section with 12 foot outside lanes, 11 foot inside lanes, and a 10 foot multi-use sidewalk would be constructed between CR 220/Betty Creek Road and CR 6/Greenwood Road to minimize social impacts as well as avoid eligible historic resources on both sides of US 441/SR 15. The proposed right of way in this area varies between 86 feet and 150 feet.

There are two bridges within the project. The bridge over Little Tennessee River will be widened on both sides. The bridge over Betty Creek will be replaced during construction. The latter will use staged construction to minimize impacts on the public.

There are currently two traffic signals in operation – one at CR7/Kelly's Creek Road and SR246/Larry McClurrie Highway. These will be updated and revised for the intersection design as proposed.

Kick off Meeting/Design Presentation

In addition to the VE Team, the following personnel attended this meeting which was held at the outset of the VE study:

Lisa Myers	GDOT Engineering Services
Matt Sanders	GDOT Engineering Services
Ron Wishon	GDOT Engineering Service
Michael Haithcock	GDOT Program Development
James Magnus	GDOT Construction
Ken Werho	GDOT Traffic Operations
Joe King	GDOT Bridge Design
Alexis John	GDOT Delivery
Stan Hicks	KCI Technologies
Mike Stolfzfus	KCI Technologies
Greg Nicolas	KCI Technologies

The VE Team appreciated the project overview given by Stan Hicks. Highlights included:

- This project has been under study and design since 1990.
- There are over 200 side street / driveway tie-ins required that will be a challenge on the cut side of the project.
- Generally cut will be on the west and fill on the east.
- The City of Dillard has much shopping with local small specialty stores. The current plan through the City of Dillard is to reduce the median to an 8 foot width to minimize impact on adjacent historic / commercial properties.
- There is an extensive number of properties in the vicinity of this project that are on the National Register of Historic Places (22 total). This includes the Rabun Gap Railroad.
- Twenty-five streams will be crossed by the project resulting in 1,355 linear feet of

impact to streams.

- A habitat for the bog turtle is suspected in an area near the North Carolina border.
- This project is in a GRIP corridor, however that does not require a four lane divided highway by itself.
- The overall typical section includes 4-12 ft. travel lanes, a 20 ft. raised median with curb and gutter, with bike lanes and sidewalks in the urban section
- Two intersections have traffic signals that will be replaced.
- Two bridges are on the project – one will be widened (over the Little Tennessee River) and one will be replaced (bridge at Betty's Creek).

The following includes the project vicinity and location maps, plan and elevation views and project cost information used in this VE study for a more complete project background description.

Figure 1
Project Vicinity Map

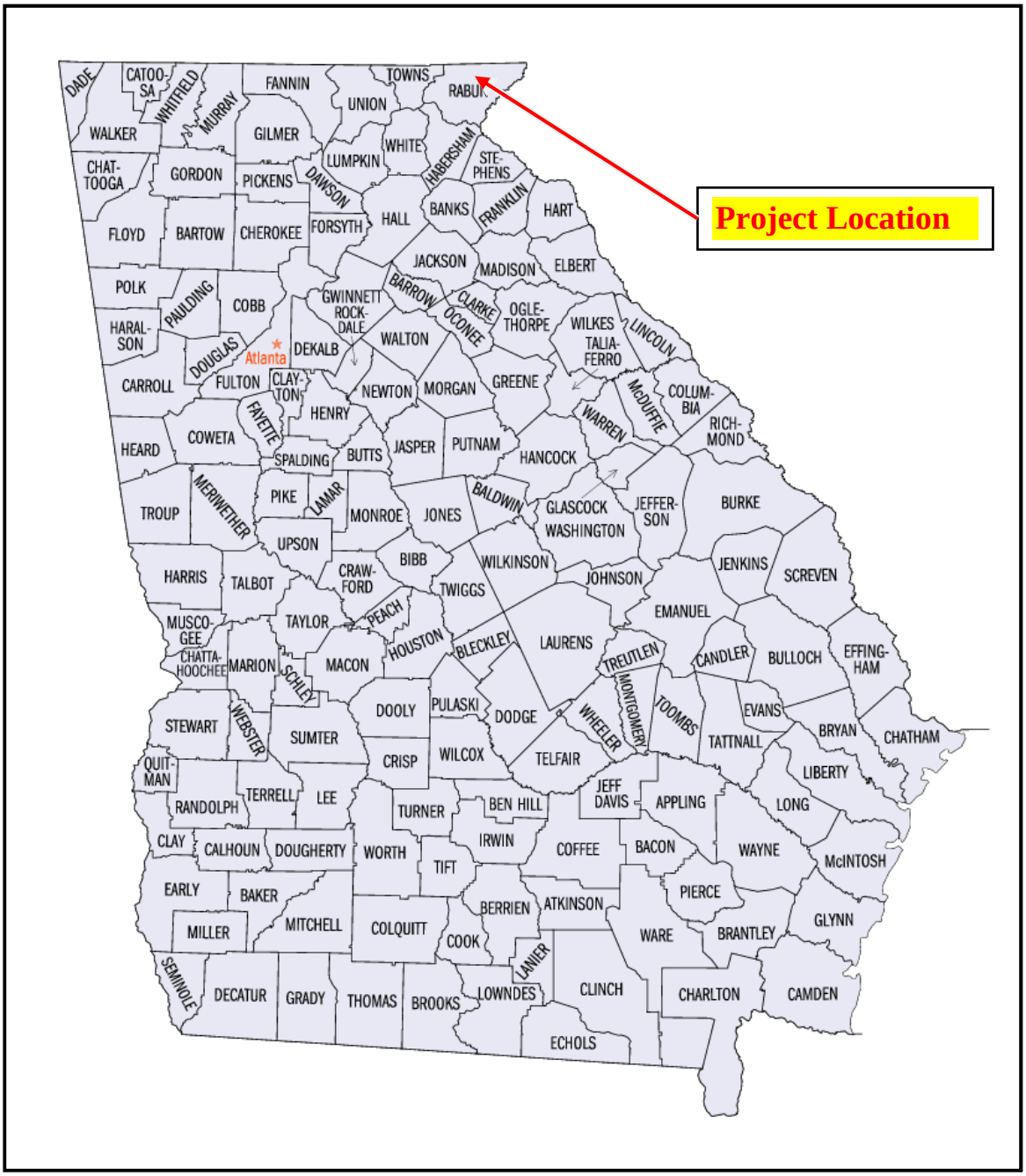

County Map of Georgia

Figure 2
Project Location Map

Figure 3
Project Limits

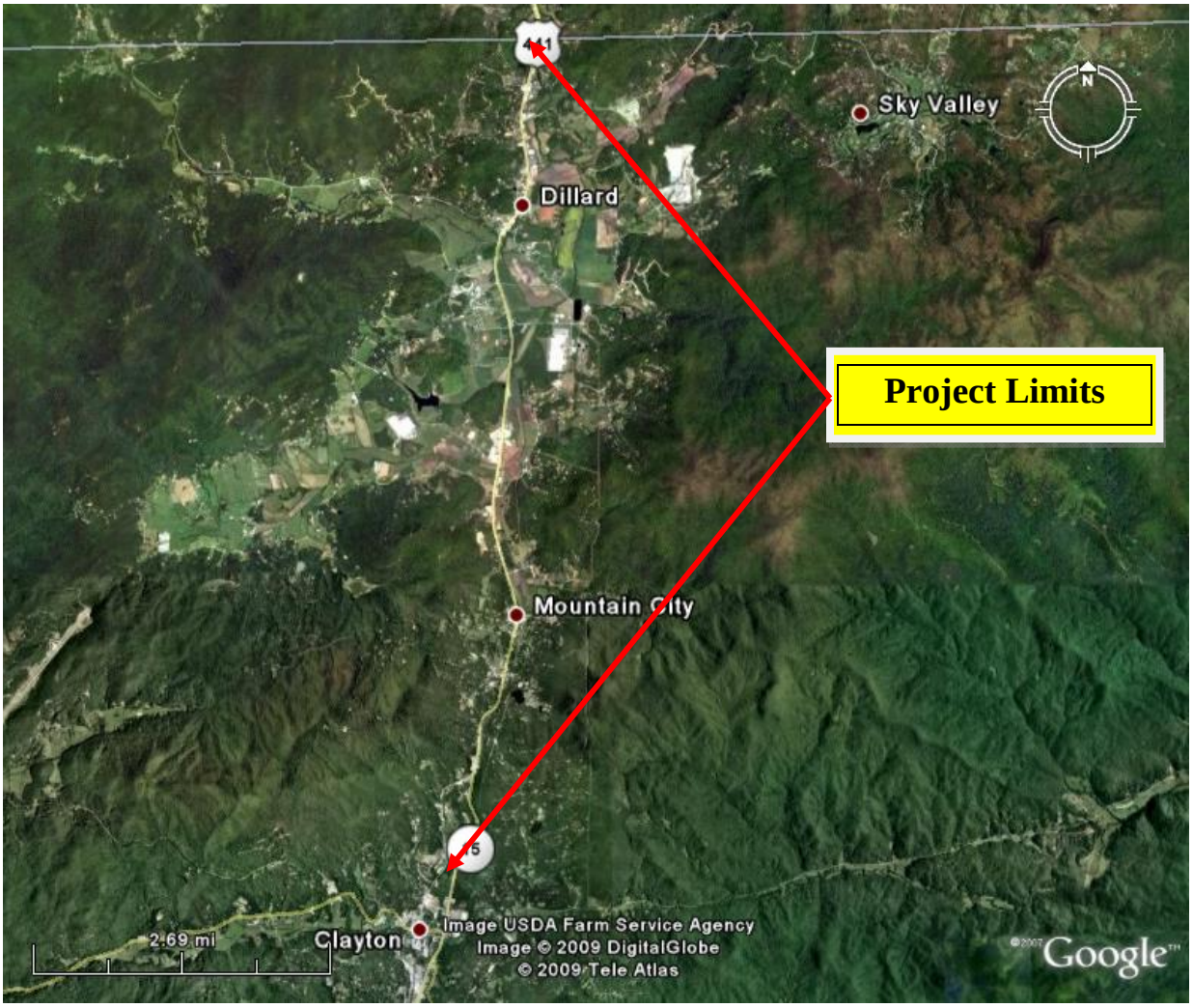

Figure 5
Project Plan

DEPARTMENT OF TRANSPORTATION
STATE OF GEORGIA

PLAN AND PROFILE OF PROPOSED US 441/SR 15 IMPROVEMENTS FROM NORTH OF CLAYTON TO NC STATE LINE RABUN COUNTY, GEORGIA

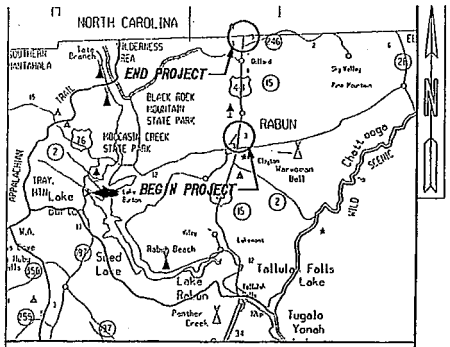

LOCATION SKETCH

FEDERAL AID PROJECT
EDS00-0441-00(028)

FEDERAL ROUTE * US 441
STATE ROUTE * SR 15
P. I. NO. 122090

NOTE :
ALL REFERENCES IN THIS DOCUMENT, WHICH INCLUDES ALL PAPERS, WRITINGS, DOCUMENTS, DRAWINGS, OR PHOTOGRAPHS USED, OR TO BE USED IN CONNECTION WITH THIS DOCUMENT, TO " STATE HIGHWAY DEPARTMENT OF GEORGIA ", "STAT. HIGHWAY DEPARTMENT ", GEORGIA STATE HIGHWAY DEPARTMENT ", " HIGHWAY DEPARTMENT ", OR " DEPARTMENT " WHEN THE CONTEXT THEREOF MEANS THE STATE HIGHWAY DEPARTMENT OF GEORGIA, AND SHALL BE DEEMED TO MEAN THE DEPARTMENT OF TRANSPORTATION.

DESIGN DATA:
TRAFFIC A.D.T.: 17,700 (2013)
TRAFFIC A.D.T.: 29,600 (2033)
TRAFFIC D.H.V.:
DIRECTIONAL DIST:
% TRUCKS: 16%
24 HR. TRUCKS %:
SPEED DESIGN: 45 MPH

LOCATION & DESIGN APPROVAL DATE:

FUNCTIONAL CLASS:
RURAL AND URBAN ARTERIAL

THIS PROJECT IS 98% IN RABUN COUNTY AND IS 98% IN CONG. DIST. NO. 10 .

PROJECT DESIGNATION: EXEMPT
DESIGNED IN ENGLISH UNITS.

THIS PROJECT HAS BEEN PREPARED USING THE HORIZONTAL GEORGIA COORDINATE SYSTEM OF 1984 (NAD 1983)/94 WEST ZONE, AND THE NORTH AMERICAN VERTICAL DATUM (NAVD) OF 1988.

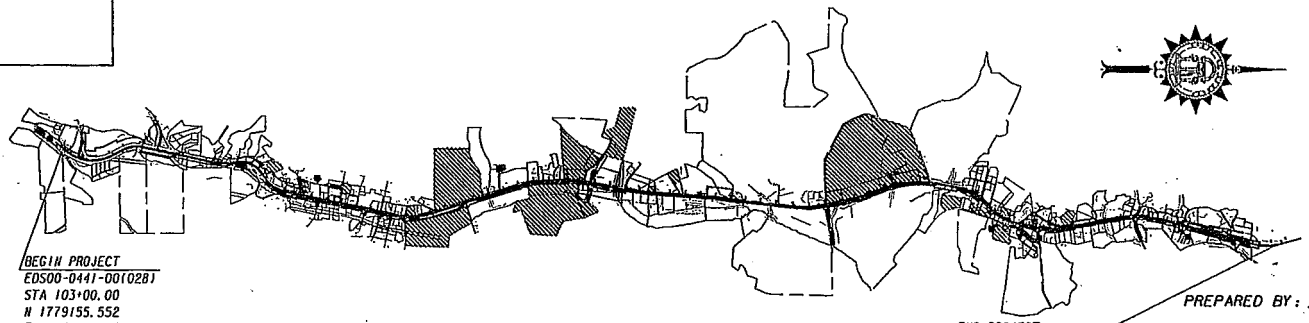

BEGIN PROJECT
EDS00-0441-00(028)
STA 103+00.00
N 1779155.552
E 2528418.065

END PROJECT
EDS00-0441-00(028)
STA 512+00.00
N 1819509.930
E 2531463.839

KCI TECHNOLOGIES
ENGINEERS
PLANNERS
SCIENTISTS
CONSTRUCTION MANAGERS
3235 Satellite Boulevard
Building 400, Suite 500
Duluth, GA 30096
Ph: 678-990-6200 - Fax: 678-990-6222
www.kci.com

PREPARED BY: _____
DESIGN

RECOMMENDED FOR APPROVAL BY: _____
DESIGN

MID-POINT COORDINATES
STA 307+50.00
N 1798981.51844
E 2530019.87765

THE DATA, TOGETHER WITH ALL OTHER INFORMATION SHOWN ON THESE PLANS OR IN ANYWAY INDICATED THEREBY, WHETHER BY DRAWINGS OR NOTES, OR IN ANY OTHER MANNER, ARE BASED UPON FIELD INVESTIGATIONS AND ARE BELIEVED TO BE INDICATIVE OF ACTUAL CONDITIONS. HOWEVER, THE SAME ARE SHOWN AS INFORMATION ONLY, ARE NOT GUARANTEED, AND DO NOT BIND THE DEPARTMENT OF TRANSPORTATION IN ANY WAY. THE ATTENTION OF BIDDER IS SPECIFICALLY DIRECTED TO SUBSECTIONS 102.04, 102.05, AND 104.03 OF THE SPECIFICATIONS.

LENGTH OF PROJECT	COUNTY No. 241 Project No. 122090
COUNTY: RABUN	MILES
NET LENGTH OF ROADWAY	7.702
NET LENGTH OF BRIDGES	0.044
NET LENGTH OF PROJECT	7.746
NET LENGTH OF EXCEPTIONS	0.000
GROSS LENGTH OF PROJECT	7.746

SCALE IN FEET
0 2000 4000 6000

DATE	CHIEF ENGINEER
PLANS COMPLETED	- -
REVISIONS	

Figure 6
Project Sections

STATE	PROJECT NUMBER	SHEET NO.	TOTAL SHEETS
GA	EDS-441(28)		

20-FT RAISED MEDIAN WITH BIKE LANES RURAL SECTION
45 MPH SPEED DESIGN

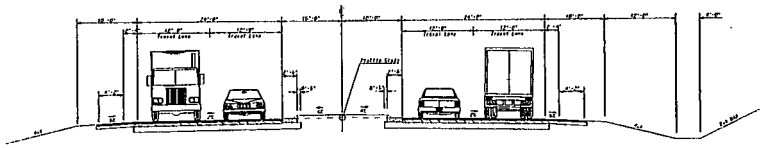

FROM BEGINNING TERMINUS
TO THE SOUTHERN CITY LIMITS OF MOUNTAIN CITY

FROM SR 246/HIGHLANDS RD.
TO GEORGIA & NORTH CAROLINA STATE LINE

8-FT RAISED MEDIAN URBAN SECTION
(12-FT OUTSIDE LANES & 11-FT INSIDE LANES)
45 MPH SPEED DESIGN

MULTIUSE SIDEWALKS FOR PEDESTRIANS & CYCLIST

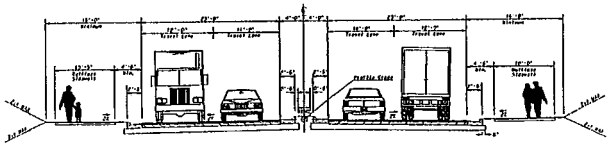

FROM APPROXIMATELY CR220/BETTY CREEK RD. & CR6/GREENWOOD RD.

20-FT RAISED MEDIAN WITH BIKE LANES URBAN SECTION
45 MPH SPEED DESIGN

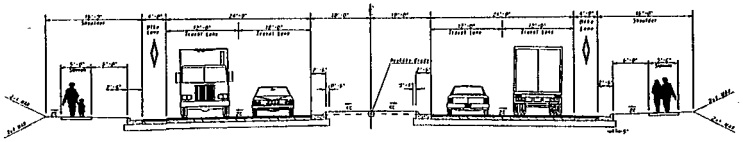

FROM THE SOUTHERN CITY LIMITS OF MOUNTAIN CITY TO
APPROXIMATELY CR 220/BETTY CREEK RD.

FROM APPROXIMATELY CR 6/GREENWOOD RD. TO SR 246/HIGHLANDS RD.

2 LANE RURAL SECTION
25-35 MPH SPEED DESIGN
(RELOCATION & TIE-INS)

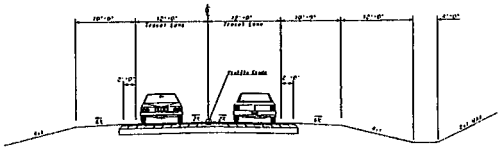

RELOCATION & TIE-INS FOR:
CS 500/CLAYBURN RD., CR 39/MOUNTAIN CITY RD., GEORGE RD., CROSS ST.,
FILE ST., GREEN ACRES DR. EXTENSION TO GREEN ST.,
CR 1/OLD WOLF FORK RD., CR 5/YORK HOUSE RD., CR 7/KELLY'S CREEK RD.,
FRANKLIN ST. EXTENSION TO CR 6/GREENWOOD RD., CAROLINA ST.,
CR 91/F.T. BLACK CIR. EXTENSION TO RIVER VALLEY LN.,
CR 11/LAMB RD.

KCI TECHNOLOGIES
ENGINEERS
PLANNERS
SCIENTISTS
CONSTRUCTION MANAGERS
3235 Satellite Boulevard
Building 400, Suite 500
Duluth, GA 30096
Ph: 678-990-6200 - Fax: 678-990-6222
www.kci.com

SCALE IN FEET
0 10 20 40

REVISION DATES

STATE OF GEORGIA
DEPARTMENT OF TRANSPORTATION
OFFICE: ROAD & AIRPORT DESIGN
TYPICAL SECTIONS
US 441/SR 15 IMPROVEMENTS
CLAYTON TO NC STATE LINE
DRAWING No. 5-01

MACTEC

Estimate Report for file "122090_VE_2009-05-26"

Section Bridges, Walls and Culverts

Item Number	Quantity	Units	Unit Price	Item Description	Cost
500-3101	600	CY	276.35	CLASS A CONCRETE	165810.00
511-1000	35000	LB	0.91	BAR REINF STEEL	31850.00
540-1101	1	LS	200000.00	REMOVAL OF EXISTING BR, STA NO -	200000.00
543-1100	1	Lump Sum	170775.00	Bridge Complete - Widen Bridge over Little Tennessee River	170775.00
543-1100	1	Lump Sum	1314563.00	Bridge Complete - New Bridge over Betty Creek	1314563.00
610-9008	2	LS	5000.00	REM PORTIONS OF EXISTING CLVT, INCL WINGWALLS & PARAPETS, STA -	10000.00
627-1000	8750	SF	42.00	MSE WALL FACE, 0 - 10 FT HT, WALL NO -	367500.00
627-1020	22500	SF	54.67	MSE WALL FACE, 20 - 30 FT HT, WALL NO -	1230075.00
627-1140	400	LF	193.00	TRAFFIC BARRIER V, WALL NO -	77200.00
627-1180	800	CY	31.06	ADDITIONAL MSE BACKFILL	24848.00
				Section Sub Total:	**$3,592,621.00**

Section Roadway

Item Number	Quantity	Units	Unit Price	Item Description	Cost
150-1000	1	LS	850000.00	TRAFFIC CONTROL -	850000.00
150-5010	12	EA	10295.23	TRAFFIC CONTROL, PORTABLE IMPACT ATTENUATOR	123542.76
153-1300	1	EA	77626.78	FIELD ENGINEERS OFFICE TP 3	77626.78
210-0100	1	LS	15248000.00	GRADING COMPLETE -	15248000.00
310-1101	92110	TN	17.76	GR AGGR BASE CRS, INCL MATL	1635873.60
318-3000	5000	TN	20.97	AGGR SURF CRS	104850.00
402-1801	4600	TN	450.00	RECYCLED ASPH CONC PATCHING, INCL BITUM MATL	2070000.00
402-1811	4600	TN	112.72	RECYCLED ASPH CONC LEVELING, INCL BITUM MATL	518512.00
402-3121	182000	TN	60.01	RECYCLED ASPH CONC 25 MM SUPERPAVE, GP 1 OR 2, INCL BITUM MATL & H LIME	10921820.00
402-3130	16400	TN	64.41	RECYCLED ASPH CONC 12.5 MM SUPERPAVE, GP 2 ONLY, INCL BITUM MATL & H LIME	1056324.00
402-3131	11200	TN	65.00	RECYCLED ASPH CONC 9.5 MM SUPERPAVE, GP 2 ONLY, INCL BITUM MATL & H LIME	728000.00
402-3190	29200	TN	68.12	RECYCLED ASPH CONC 19 MM SUPERPAVE, GP 1 OR 2,INCL BITUM MATL & H LIME	1989104.00
413-1000	21725	GL	2.13	BITUM TACK COAT	46274.25
432-5010	205000	SY	1.24	MILL ASPH CONC PVMT, VARIABLE DEPTH	254200.00
441-0016	500	SY	41.87	DRIVEWAY CONCRETE, 6 IN TK	20935.00
441-0018	2000	SY	46.28	DRIVEWAY CONCRETE, 8 IN TK	92560.00
441-0104	30000	SY	32.12	CONC SIDEWALK, 4 IN	963600.00
441-0754	73500	SY	57.74	CONCRETE MEDIAN, 7 1/2 IN	4243890.00
441-4020	100	SY	44.62	CONC VALLEY GUTTER, 6 IN	4462.00
441-4030	500	SY	45.37	CONC VALLEY GUTTER, 8 IN	22685.00
441-6222	129600	LF	15.79	CONC CURB & GUTTER, 8 IN X 30 IN, TP 2	2046384.00
446-1100	40500	LF	4.63	PVMT REINF FABRIC STRIPS, TP 2, 18 INCH WIDTH	187515.00
632-0003	8	EA	5413.82	CHANGEABLE MESSAGE SIGN, PORTABLE, TYPE 3	43310.56
634-1200	200	EA	97.36	RIGHT OF WAY MARKERS	19472.00
641-1100	84	LF	54.49	GUARDRAIL, TP T	4577.16
641-1200	15600	LF	18.38	GUARDRAIL, TP W	286728.00
641-5001	24	EA	684.10	GUARDRAIL ANCHORAGE, TP 1	16418.40
641-5012	24	EA	1869.18	GUARDRAIL ANCHORAGE, TP 12	44860.32
643-8200	35000	LF	2.38	BARRIER FENCE (ORANGE), 4 FT	83300.00
				Section Sub Total:	**$43,704,824.83**

Section Drainage

Item Number	Quantity	Units	Unit Price	Item Description	Cost
550-1180	10000	LF	37.73	STORM DRAIN PIPE, 18 IN, H 1-10	377300.00
550-1181	200	LF	53.23	STORM DRAIN PIPE, 18 IN, H 10-15	10646.00
550-1182	200	LF	66.98	STORM DRAIN PIPE, 18 IN, H 15-20	13396.00

550-1240	2000	LF	43.32	STORM DRAIN PIPE, 24 IN, H 1-10	86640.00
550-1241	200	LF	53.22	STORM DRAIN PIPE, 24 IN, H 10-15	10644.00
550-1242	200	LF	44.94	STORM DRAIN PIPE, 24 IN, H 15-20	8988.00
550-1300	200	LF	54.77	STORM DRAIN PIPE, 30 IN, H 1-10	10954.00
550-1301	200	LF	57.12	STORM DRAIN PIPE, 30 IN, H 10-15	11424.00
550-1302	200	LF	47.05	STORM DRAIN PIPE, 30 IN, H 15-20	9410.00
550-1360	200	LF	65.04	STORM DRAIN PIPE, 36 IN, H 1-10	13008.00
550-1361	200	LF	64.53	STORM DRAIN PIPE, 36 IN, H 10-15	12906.00
550-1362	200	LF	76.67	STORM DRAIN PIPE, 36 IN, H 15-20	15334.00
550-2180	200	LF	34.29	SIDE DRAIN PIPE, 18 IN, H 1-10	6858.00
550-2240	200	LF	32.24	SIDE DRAIN PIPE, 24 IN, H 1-10	6448.00
550-3318	50	EA	594.66	SAFETY END SECTION 18 IN, STORM DRAIN, 4:1 SLOPE	29733.00
550-3324	20	EA	934.41	SAFETY END SECTION 24 IN, STORM DRAIN, 4:1 SLOPE	18688.20
550-3330	10	EA	1600.00	SAFETY END SECTION 30 IN, STORM DRAIN, 4:1 SLOPE	16000.00
550-3336	10	EA	1800.00	SAFETY END SECTION 36 IN, STORM DRAIN, 4:1 SLOPE	18000.00
550-3418	10	EA	562.15	SAFETY END SECTION 18 IN, SIDE DRAIN, 4:1 SLOPE	5621.50
550-3424	10	EA	497.39	SAFETY END SECTION 24 IN, SIDE DRAIN, 4:1 SLOPE	4973.90
550-3518	10	EA	1142.78	SAFETY END SECTION 18 IN, STORM DRAIN, 6:1 SLOPE	11427.80
550-3524	10	EA	849.00	SAFETY END SECTION 24 IN, STORM DRAIN, 6:1 SLOPE	8490.00
550-3530	10	EA	2000.00	SAFETY END SECTION 30 IN, STORM DRAIN, 6:1 SLOPE	20000.00
550-3536	10	EA	4881.00	SAFETY END SECTION 36 IN, STORM DRAIN, 6:1 SLOPE	48810.00
550-3618	50	EA	539.72	SAFETY END SECTION 18 IN, SIDE DRAIN, 6:1 SLOPE	26986.00
550-3624	10	EA	821.50	SAFETY END SECTION 24 IN, SIDE DRAIN, 6:1 SLOPE	8215.00
550-4118	50	EA	408.89	FLARED END SECTION 18 IN, SIDE DRAIN	20444.50
550-4124	10	EA	450.00	FLARED END SECTION 24 IN, SIDE DRAIN	4500.00
550-4218	50	EA	616.24	FLARED END SECTION 18 IN, STORM DRAIN	30812.00
550-4224	10	EA	698.66	FLARED END SECTION 24 IN, STORM DRAIN	6986.60
550-4230	10	EA	844.49	FLARED END SECTION 30 IN, STORM DRAIN	8444.90
550-4236	10	EA	1075.94	FLARED END SECTION 36 IN, STORM DRAIN	10759.40
573-2006	5000	LF	15.54	UNDDR PIPE INCL DRAINAGE AGGR, 6 IN	77700.00
668-1100	50	EA	2481.45	CATCH BASIN, GP 1	124072.50
668-1110	20	LF	176.61	CATCH BASIN, GP 1, ADDL DEPTH	3532.20
668-1200	20	EA	3078.58	CATCH BASIN, GP 2	61571.60
668-1210	10	LF	217.39	CATCH BASIN, GP 2, ADDL DEPTH	2173.90
668-2100	200	EA	2410.48	DROP INLET, GP 1	482096.00
668-2110	50	LF	222.43	DROP INLET, GP 1, ADDL DEPTH	11121.50
668-2200	20	EA	3135.95	DROP INLET, GP 2	62719.00
668-2210	10	LF	298.46	DROP INLET, GP 2, ADDL DEPTH	2984.60
668-3300	20	EA	2520.36	SAN SEWER MANHOLE, TP 1	50407.20
668-5000	20	EA	1861.20	JUNCTION BOX	37224.00
				Section Sub Total:	**$1,808,451.30**

Section Signing and Marking

Item Number	Quantity	Units	Unit Price	Item Description	Cost
636-1020	500	SF	16.60	HIGHWAY SIGNS, TP 1 MATL, REFL SHEETING, TP 3	8300.00
636-1033	500	SF	20.14	HIGHWAY SIGNS, TP 1 MATL, REFL SHEETING, TP 9	10070.00
636-1041	500	SF	37.29	HIGHWAY SIGNS, TP 2 MATL, REFL SHEETING, TP 9	18645.00
636-2070	5000	LF	8.76	GALV STEEL POSTS, TP 7	43800.00
639-2001	1000	LF	2.65	STEEL WIRE STRAND CABLE, 1/4 IN	2650.00
639-4004	12	EA	5837.80	STRAIN POLE, TP IV	70053.60
653-0120	60	EA	72.94	THERMOPLASTIC PVMT MARKING, ARROW, TP 2	4376.40
653-0130	2	EA	96.48	THERMOPLASTIC PVMT MARKING, ARROW, TP	192.96

				3	
653-0140	2	EA	100.00	THERMOPLASTIC PVMT MARKING, ARROW, TP 4	200.00
653-0150	2	EA	101.67	THERMOPLASTIC PVMT MARKING, ARROW, TP 5	203.34
653-0170	2	EA	88.05	THERMOPLASTIC PVMT MARKING, ARROW, TP 7	176.10
653-0210	30	EA	101.73	THERMOPLASTIC PVMT MARKING, WORD, TP 1	3051.90
653-1501	129600	LF	0.44	THERMOPLASTIC SOLID TRAF STRIPE, 5 IN, WHITE	57024.00
653-1502	84000	LF	0.45	THERMOPLASTIC SOLID TRAF STRIPE, 5 IN, YELLOW	37800.00
653-1704	600	LF	3.45	THERMOPLASTIC SOLID TRAF STRIPE, 24 IN, WHITE	2070.00
653-1804	600	LF	1.69	THERMOPLASTIC SOLID TRAF STRIPE, 8 IN, WHITE	1014.00
653-3501	84000	GLF	0.33	THERMOPLASTIC SKIP TRAF STRIPE, 5 IN, WHITE	27720.00
653-3502	11616	GLF	0.37	THERMOPLASTIC SKIP TRAF STRIPE, 5 IN, YELLOW	4297.92
653-6004	5000	SY	2.72	THERMOPLASTIC TRAF STRIPING, WHITE	13600.00
653-6006	2500	SY	2.64	THERMOPLASTIC TRAF STRIPING, YELLOW	6600.00
654-1010	1290	EA	31.94	RAISED PVMT MARKERS TP 10	41202.60
				Section Sub Total:	**$353,047.82**

Section Erosion Control

Item Number	Quantity	Units	Unit Price	Item Description	Cost
163-0232	28	AC	311.88	TEMPORARY GRASSING	8732.64
163-0240	188	TN	165.45	MULCH	31104.60
163-0300	10	EA	1174.43	CONSTRUCTION EXIT	11744.30
163-0503	75	EA	481.37	CONSTRUCT AND REMOVE SILT CONTROL GATE, TP 3	36102.75
163-0520	6500	LF	15.03	CONSTRUCT AND REMOVE TEMPORARY PIPE SLOPE DRAIN	97695.00
163-0523	400	EA	143.27	CONSTRUCT AND REMOVE TEMPORARY DITCH CHECKS - TYPE C SILT FENCE	57308.00
163-0550	250	EA	209.07	CONSTRUCT AND REMOVE INLET SEDIMENT TRAP	52267.50
165-0030	52000	LF	0.74	MAINTENANCE OF TEMPORARY SILT FENCE, TP C	38480.00
165-0040	400	EA	55.44	MAINTENANCE OF EROSION CONTROL CHECKDAMS/DITCH CHECKS	22176.00
165-0087	75	EA	114.66	MAINTENANCE OF SILT CONTROL GATE, TP 3	8599.50
165-0101	10	EA	474.28	MAINTENANCE OF CONSTRUCTION EXIT	4742.80
165-0105	250	EA	82.23	MAINTENANCE OF INLET SEDIMENT TRAP	20557.50
167-1000	52	EA	483.11	WATER QUALITY MONITORING AND SAMPLING	25121.72
167-1500	26	MO	718.48	WATER QUALITY INSPECTIONS	18680.48
171-0030	105000	LF	3.61	TEMPORARY SILT FENCE, TYPE C	379050.00
603-2181	5000	SY	34.34	STN DUMPED RIP RAP, TP 3, 18 IN	171700.00
603-7000	5000	SY	4.31	PLASTIC FILTER FABRIC	21550.00
700-6910	123	AC	792.72	PERMANENT GRASSING	97504.56
700-7000	123	TN	66.74	AGRICULTURAL LIME	8209.02
700-7010	308	GL	22.03	LIQUID LIME	6785.24
700-8000	74	TN	405.48	FERTILIZER MIXED GRADE	30005.52
700-8100	6153	LB	2.36	FERTILIZER NITROGEN CONTENT	14521.08
710-9000	42	SY	4.90	PERMANENT SOIL REINFORCING MAT	205.80
715-2200	10000	SY	1.39	BITUMINOUS TREATED ROVING, WATERWAYS	13900.00
716-2000	41	SY	0.96	EROSION CONTROL MATS, SLOPES	39.36
				Section Sub Total:	**$1,176,783.37**

Section Signals

Item Number	Quantity	Units	Unit Price	Item Description	Cost
647-1000	1	LS	54154.86	TRAFFIC SIGNAL INSTALLATION NO -	54154.86
				Section Sub Total:	**$54,154.86**

Total Estimated Cost: $50,689,883.18

Subtotal Construction Cost	**$50,689,883.18**
E&C Rate 0.0 %	$0.00
Inflation Rate 0.0 % @ 0 Years	$0.00
Total Construction Cost	**$50,689,883.18**
Right Of Way	$0.00
ReImb. Utilities	$0.00
Grand Total Project Cost	**$50,689,883.18**

CONCEPT REPORT RIGHT OF WAY

COST ESTIMATE

Date:	May 09, 2008		
Project:	EDS-441(28) US 441/SR 15 from CS500 Clayburn Rd. to NC St Line	**P.I. Number:**	0122090
Existing/Required R/W:	± 100' (varies) / ± 200' (varies widely)	**No. Parcels:**	181
Project Termini:	Approximately CS500 Clayburn Rd. to NC State Line		
Project Description:	Widening and enhancement of State Route 15/US441 moving from CS500 Clayburn Rd. to the North Carolina State Line. The project includes enhancements and reconfigurations of several intersections and side roads. The proposed project basically follows along the current path of SR 15 but straightens out some curves while widening for increased sight distances. In addition, a raised median will be added along the entire length to improve safety.		

Land:

Small Residential Lots: 20.95 AC x $45,000/AC =	$ 942,668	
Large Residential Tracts: 24.43 AC x $25,000/AC =	$ 610,651	
Commercial Sites: 41.25 AC x $200,000 =	$8,249,514	
TOTAL:		$9,802,833

Improvements:

Residential:	22	$1,970,000	
Commercial:	28	$4,485,000	
TOTAL:			$6,455,000

Relocation:

Commercial-	22 Displacees	$1,090,000	
Residential-	28 Displacees	$ 405,000	
TOTAL:			$1,495,000

Damages:

Proximity-	3 Parcels	$ 50,000	
Consequential-	3 Parcels	$ 45,000	
Cost to Cure –	0 Parcels	$ 0	
TOTAL:			$ 95,000

Net Cost:	$17,847,833
Plus Scheduling Contingency (55%):	$ 9,816,308
Plus Admin./Court Cost (60% of 2 lines above):	$16,598,485
Plus Market Adjustment Factor (40% of 3 lines above):	$17,705,051
	$61,967,677

TOTAL COST: **$62,000,000 (R)**

Notes: This cost estimate uses a 55% adjustment for scheduling contingencies between date of estimate and project implementation. There are additional adjustments for unforeseen management and condemnation costs as well as for inflation.

The relocation costs were estimated with assistance from local real estate brokers and these figures are to include estimated relocation benefits and moving costs.

The appraiser has retained a work file with notes outlining unusual zoning or assessment issues, unusual geographical features, valuation issues, damage considerations, etc.

Due to variances in rounding, the above area value calculations appear to vary slightly, however the amounts for total land value were determined prior to any rounding and are reliable.

Prepared by: _____, Moreland Altobelli Associates

Approved by: _____, GDOT R/W

PRECONSTRUCTION STATUS REPORT FOR PI:122090-

PROJ ID :	122090-	SR 15/US 441 FM NORTH CL/CLAYTON TO NORTH CAROLINA LINE				MGMT LET DATE :	12/15/2013
COUNTY :	Rabun					MGMT ROW DATE :	05/15/2011
LENGTH (MI) :	7.40	MPO:	Not Urban	DOT DIST:	1		
PROJ NO.:	EDS00-0441-00(028)	TIP #:		CONG. DIST:	10	SCHED LET DATE :	2/20/2014
PROJ MGR:	Norwood, David	MODEL YR :		BIKE:	Y	WHO LETS?:	GDOT Let
OFFICE :	Program Delivery	TYPE WORK:	Widening	MEASURE:	E	LET WITH :	
CONSULTANT:	Turnkey Consultant, (Contract with GDOT)	CONCEPT:	ADD 4R/U(MED20)	NEEDS SCORE:	10		
SPONSOR :	GDOT	PROG TYPE:	Reconstruction/Rehabilitation	BRIDGE SUFF:			
DESIGN FIRM:	KCI Technologies, Inc.	Prov. for ITS:	N				
		BOND PROJ :	GRIP FEDERAL				

SCHED START	SCHED FINISH	ACTIVITY	ACTUAL START	ACTUAL FINISH	%
		Concept Development	1/9/1991	2/29/1992	100
		Concept Meeting	10/1/1991	10/1/1991	100
		PM Submit Concept Report	12/16/1991	12/16/1991	100
		Receive Preconstruction Concept Approval	2/23/1992	2/23/1992	100
		Management Concept Approval Complete	**2/29/1992**	**2/29/1992**	**100**
		Revise or Re-validate Approved Concept	11/30/2006	1/2/2007	100
	8/17/2009	Value Engineering Study	1/22/2009		32
		Public Information Open House Held	12/14/1993	4/19/2005	100
	3/3/2011	**Environmental Approval**	**9/18/2007**		0
9/17/2010	11/11/2010	Pub Hear Held/Comm Resp (EA/FONSI, GEPA)			0
	7/23/2009	Mapping	4/16/2001		99
	8/6/2009	Field Surveys/SDE	2/17/1994		50
	10/21/2010	**Preliminary Plans**	**5/19/2008**		7
7/3/2009	1/7/2010	Preliminary Bridge Design			0
		Underground Storage Tanks	7/1/1992	1/9/2000	100
2/26/2010	8/12/2010	404 Permit Obtainment			0
3/25/2011	3/28/2011	PFPR Inspection			0
3/29/2011	5/23/2011	R/W Plans Preparation			0
5/24/2011	**7/4/2011**	**R/W Plans Final Approval**			0
5/18/2011	5/20/2011	L & D Approval			0
7/5/2011	12/25/2013	R/W Acquisition			0
3/2/2012	3/15/2012	Stake R/W			0
7/3/2009	7/6/2010	Soil Survey			0
1/8/2010	12/7/2010	Bridge Foundation Investigation			0
5/23/2011	**6/19/2012**	**Final Design**			0
7/14/2011	4/18/2012	Final Bridge Plans Preparation			0
7/11/2012	7/12/2012	FFPR Inspection			0
7/26/2012	8/8/2012	Submit FFPR Responses (OES)			0

PROGRAMMED FUNDS

Phase	Approved	Proposed	Cost	Fund	Status	Date Auth
PE	2002	2002	1,503,051.49	CFTS	AUTHORIZED	2/22/1993
PE	1993	1993	316,000.00	EDS	AUTHORIZED	2/22/1993
PE	2002	2002	5,039,073.45	GRVA	AUTHORIZED	2/22/1993
ROW	LR	2018	44,780,725.28	EDS	PRECST	
ROW	2011	2018	53,463,239.59	L050	PRECST	
ROW	2009	2011	2,225,000.00	LY20S	PRECST	
UTL	NONE	LR	1,399,220.48	EDS	PRECST	
CST	LR	LR	86,293,950.64	EDS	PRECST	

PE Cost Est Amt:	1,503,051.49	Date:	
PE Cost Est Amt:	316,000.00	Date:	
PE Cost Est Amt:	5,039,073.45	Date:	
ROW Cost Est Amt:	21,275,000.00	Date:	1/2/2007
ROW Cost Est Amt:	25,400,000.00	Date:	1/2/2007
ROW Cost Est Amt:	2,225,000.00	Date:	1/2/2007
Utility Cost Est Amt:	859,000.00	Date:	7/31/2008
CST Cost Est Amt:	52,977,000.00	Date:	7/31/2008

STIP AMOUNTS

Phase	Cost	Fund
PE	0.00	EDS
PE	0.00	GRVA
PE	0.00	CFTS
ROW	2,500,000.00	LY20S
ROW	25,400,000.00	L050
ROW	0.00	EDS
UTL	0.00	EDS
CST	0.00	EDS

PDD: BOND. HDR is closing shop. 5/25/04.
Bridge: BRIDGE REQUIRED
Design: NTP Phase 4 (5/21/08)|ENV on sched for Nov 2010.
EIS: EA|NotApvd|OnSchedRW| John5-26-09
LGPA: REQ RABUN/CLAYTON DO UTIL 3/92| MT CITY & DILLARD REF|BI-STATE SGN NC DO PE/GDOT TO DO RW|UTIL & REIMBURSE NC FOR CST + UP TO 5% CST INSP & SUP 2-13-91.
Programming: #1 11-01|#2 4-02|#3 12-02|#4 4-07|#5 2-08|#6 6-08|#7 7-08
Railroad: NO
Traffic Op: CCB SND CNSLTNT PLNS FOR REVIEW 11-7-07
Utility: OCD SUE; NEED 2ND SUBMISSION PLANS 01/26/05
EMG: 1358M(H85-W/V29)DTM COMBINED;C=M/S/D/HDR/WL JORDAN/LOWE ENG
Conceptual Design: CONCEPT REVISED/COMPLETED & XFERRED TO OCD - 01-22-07

District Comments

District received revised layouts 01/04

Prel. Parcel CT:	166	**Total Parcel in ROW System:**		**Cond. Filed:**		**Acquired by:**	DOT	***DEEDS CT:***
Under Review:		**Options - Pending:**		**Relocations:**		**Acquisition MGR:**		
Released:		**Condemnations- Pend:**		**Acquired:**		**R/W Cert Date:**		

VE RECOMMENDATIONS

DEVELOPMENT AND RECOMMENDATION PHASE

US 441/SR 15 Widening and Median Construction

IDEA No.:	**PAGE No.:**	**CREATIVE IDEA:**
A-2	1 of 3	Use 2:1 front slopes and guardrail versus 4:1 front slopes and no guardrail.

Comp By: DPC Date: 6/23/09 Checked By: DW Date: 6/23/09

Original Concept:

Utilize typical 4:1 slopes to eliminate guardrail and associated costs.

Proposed Change:

It is recommended to steepen the side slopes from a 4:1 to a 2:1 throughout the entire project limits.

Justification:

Increasing front slopes to a 2:1 reduces earthwork costs and right-of-way R/W acquisition costs due to the significant heights of various cuts and fills within project limits. Increasing slope grade will add guardrail cost but still provide adequate safety with a corridor posted speed of 45 MPH.

This concept results in significant cost savings to the project.

See VE Item B-3, page 5 of 5, for calculations of ROW unit costs.

LIFE CYCLE COST SUMMARY	CAPITAL COST	FUTURE COST	PRESENT WORTH
INITIAL COST - Original	904,000		
- Proposed	351,800		
- Savings	552,200		552,200
FUTURE COST - Savings			-0-
TOTAL PRESENT WORTH SAVINGS			**552,200**

COST WORKSHEET							
PROJECT:	**US 441/SR 15 Widening and Median Construction**				ITEM No: A-2 CLIENT: GDOT Sheet 2 of 3		
CONSTRUCTION ELEMENT		**ORIGINAL ESTIMATE**			**NEW ESTIMATE**		
ITEM	Units	No. Units	Cost/ Unit	Total Cost	No. Units	Cost/ Unit	Total Cost
Right-of-Way	SF	31,000	16.43	509,330			
Storm drain pipe, 18" H 1-10	LF	100	37.73	3,773			
Unclassified excavation, soil	CY	11,482	3.71	42,598			
Guardrail, TP W	LF				9,300	18.38	170,934
Guardrail Anchorage Type 1	EA				14	684.1	9,577
Guardrail Anchorage Type 12	EA				14	1,869.18	26,169
Construction SUBTOTAL				46,371			206,680
ROW SUBTOTAL				509,330			
Markups---							
Construction Item 70.2%				32,553			145,089
ROW Item 62.0%				315,785			0
TOTAL				904,038			351,769
TOTAL ROUNDED				904,000			351,800

Right-of-Way (ROW) Cost:
Estimated right-of-way cost was calculated by DW and given as $16.43 per SF.
STA 109+50 LT to 111+00 LT = 150', 10' fill, 2' ROW reduction = 300 SF
STA 132+00 LT to 133+50 LT = 150', 10' fill, 2' ROW reduction = 300 SF
STA 141+50 RT to 143+00 RT = 150', 10' fill, 2' ROW reduction = 300 SF
STA 143+50 BS to 167+50 BS = 2,400', 5' fill, 4' ROW reduction = 9,600 SF
STA 171+00 LT to 185+00 LT = 1,400', 5' fill, 2' ROW reduction = 2,800 SF
STA 461+00 LT to 465+50 LT = 450', 5' fill, 2' ROW reduction = 900 SF
STA 482+50 RT to 486+50 RT = 400', 5' fill, 2' ROW reduction = 800 SF
STA 465+50 BS to 482+50 BS = 1,700', 5' fill, 4' ROW reduction = 6,800 SF
STA 486+50 BS to 495+50 BS = 900', 5' fill, 4' ROW reduction = 3,600 SF
STA 497+00 BS to 511+00 BS = 1,400', 5' fill, 4' ROW reduction = 5,600 SF
Total = 31,000 SF

Unclassified Embankment, Soil: 31,000 SF x 10 LF avg. depth of fill = 310,000 CF / 27 = 11,482 CY

18" Storm Drain Cross-Drain Pipes: No drainage plans available for review. 1,000 LF estimated in report. Will assume 10% cross drains will be affected by lane width reduction. Therefore use 100 LF.

Guardrail Type W Cost:
STA 109+50 LT to 111+00 LT = 150'
STA 132+00 LT to 133+50 LT = 150'
STA 141+50 RT to 143+00 RT = 150'
STA 143+50 BS to 167+50 BS = 2,400'
STA 171+00 LT to 185+00 LT = 1,400'
STA 461+00 LT to 465+50 LT = 450'
STA 482+50 RT to 486+50 RT = 400'
STA 465+50 BS to 482+50 BS = 1,700'
STA 486+50 BS to 495+50 BS = 900'
STA 497+00 BS to 511+00 BS = 1,400'
Total = 9,300 LF

Guardrail Anchorage Type 1: Based on begin and stop points listed above at 14 separate locations the total is estimated to be near 14 EA.
Guardrail Anchorage Type 12: Based on begin and stop points listed above at 14 separate locations the total is estimated to be near 14 EA.

DEVELOPMENT AND RECOMMENDATION PHASE

US 441/SR 15 Widening and Median Construction

IDEA No.:	**PAGE No.:**	**CREATIVE IDEA:**
A-3	1 of 3	Use permanent easements versus right-of-way for a portion of the land acquisition

Comp By: DPC Date: 6.24.09 Checked By: DCW Date: 6.24.09

Original Concept:

Purchase all required land by traditional permanent right of way methods.

Proposed Change:

It is recommended to utilize permanent easement methods to purchase specific portions of required property. Narrow these areas to back slope locations where large final grade heights expand over 30 feet and increase horizontal R/W limits towards 400 feet.

Justification:

This concept results in significant R/W cost savings to the project (40%+/-)

LIFE CYCLE COST SUMMARY	CAPITAL COST	FUTURE COST	PRESENT WORTH
INITIAL COST - Original	84,130,000		
- Proposed	50,490,000		
- Savings	33,640,000		33,640,000
FUTURE COST - Savings			-0-
TOTAL PRESENT WORTH SAVINGS			**33,640,000**

COST WORKSHEET							
PROJECT:	**US 441/SR 15 Widening and Median Construction**				ITEM No: A-3 CLIENT: GDOT		
					Sheet 2 of 3		
CONSTRUCTION ELEMENT		**ORIGINAL ESTIMATE**			**NEW ESTIMATE**		
ITEM	Units	No. Units	Cost/ Unit	Total Cost	No. Units	Cost/ Unit	Total Cost
Permanent Right-of-Way	SF	3,159,842	$16.43	51,916,204			
Permanent Easement	SF				3,159,842	9.86	31,156,042
Construction SUBTOTAL				0			0
ROW SUBTOTAL				51,916,204			31,156,042
Markups---							
Construction Item 70.2%				0			0
ROW Item 62.0%				32,211,928			19,331,078
TOTAL				84,128,132			50,487,120
TOTAL ROUNDED				84,130,000			50,490,000

US 441/SR 15 Widening and Median Construction	ITEM N$^{\underline{O}}$: A-3 CLIENT: GDOT Sheet 3 of 3

Right-of-Way (ROW) Calculation:

Cost Analysis -

Estimated right-of-way cost was calculated by DW and given as $16.43 SF.

Typical easement costs, as received from GDOT's Office of Right-of-Way, run near 60% of permanent right-of-way costs. Therefore, we will calculate as follows: $16.43 x .60 = $9.86 SF.

Volume Analysis -

Proposed typical cross-section width from ditch line to ditch line, before toe of back slope, measures approximately 95 LF throughout entire project length of 40,900 LF (Sta. 103+00 to Sta. 512+00). This calculates to be: 40,900' x 95' = 3,885,500 SF or 89.2 acres (43,560 SF per acre)

Per ROW Concept Report total project acres is 86.63 plus existing roadway section (40,900' x 80') 75.11 acres, which then totals161.74 acres.

161.74 total acres – 89.2 (typ. Section) acres = 72.54 acres of needed property beyond ditch line and on back slopes. Use 72.54 acres or 3,159,842 SF as the land area that could be purchased by temporary easement versus permanent ROW methods.

Just using Concept ROW Cost Estimate at $62,000,000 x 40% = $24,800,000 in savings.

DEVELOPMENT AND RECOMMENDATION PHASE

US 441/SR 15 Widening and Median Construction

IDEA No.:	PAGE No.:	CREATIVE IDEA:
B-1	1 of 3	Reduce lane widths from 12-foot to 11- foot

Comp By: DPC Date: 06/22/09 Checked By: DCW Date: 6/23/09

Original Concept:

Approximately 3 miles of the proposed roadway typical sections for this project include 11-foot wide travel lanes in both directions, however there are approximately 26 lane miles that currently specify a 12-foot wide lane.

Proposed Change:

It is recommended that 11-foot lanes be used in-lieu-of 12-foot lanes throughout the entire project limits.

Justification:

Reduction of one foot of roadway section per each lane reduces pavement section, bridge width, earthwork, and right-of-way (R/W) acquisition costs.

The reduction in lane width would reduce the amount of R/W required for the project as well as reduce the amount of roadway and bridge construction, and earthwork costs. The 11-foot lanes would accommodate current and future local AADT traffic demands and provide adequate safety for both the rural roadway section with a posted speed of 45 MPH.

This concept results in significant cost savings to the project.

See VE Item B-3, page 5 of 5, for calculations of R/W unit costs.

LIFE CYCLE COST SUMMARY	CAPITAL COST	FUTURE COST	PRESENT WORTH
INITIAL COST - Original	2,723,000		
- Proposed	0		
- Savings	2,723,000		2,723,000
FUTURE COST - Savings			-0-
TOTAL PRESENT WORTH SAVINGS			**2,723,000**

							COST WORKSHEET
PROJECT:	**US 441/SR 15 Widening and Median Construction**				ITEM No: B-1 CLIENT: GDOT		
					Sheet 2 of 3		
CONSTRUCTION ELEMENT		**ORIGINAL ESTIMATE**			**NEW ESTIMATE**		
ITEM	Units	No. Units	Cost/ Unit	Total Cost	No. Units	Cost/ Unit	Total Cost
Right-of-Way	SF	70,200	$16.43	1,153,386			
GAB, 12" thick	TN	527	$17.76	9,360			
25 mm recycled superpav, 880#/SY	TN	3,432	$60.01	205,954			
19 mm recycled superpav, 165#/SY	TN	858	$68.12	58,447			
12.5 mm recycled superpav, 220#/SY	TN	1,287	$64.41	82,896			
Storm drain pipe, 18" H 1-10	LF	250	$37.73	9,433			
Unclassified excavation, soil	CY	26,000	$3.71	96,460			
Bridge structure at Betty Creek	SF	198	$90.00	17,820			
Bridge structure at E. Tenn. River	SF	240	$90.00	21,600			
Construction SUBTOTAL				501,969			
ROW SUBTOTAL				1,153,386			0
Markups---							
Construction Item 70.2%				352,382			0
ROW Item 62.0%				715,099			0
TOTAL				2,722,837			0
TOTAL ROUNDED				2,723,000			0

Remaining Mainline Sections with 12-foot lanes:
STA 103+00 to STA 387+00 = 28,400 LF x 4 lanes (2 NB + 2 SB) = 113,600 LF
STA 445+00 to STA 512+00 = 6,700 LF x 4 lanes (2 NB + 2 SB) = 26,800 LF
TOTAL Mainline distance of 12 foot lanes = 140,400 LF (26.6 miles)

Total pavement width 1-foot reduction per each lane = 140,400 LF x 1.0 LF= 140,400 SF / 9 SY = 15,600 SY for four new full-depth lanes. 7,800 SY for two new full-depth lanes only.

GAB and Asphalt SY to Ton calculations:

1. GAB – 135 # x 7,800 SY / 2,000 # = 527 Tons
2. 12.5 mm mix – 165 # x 15,600 SY / 2,000 # = 1,287 Tons (resurfacing top surface on all 4 lanes)
3. 19 mm mix – 220 # x 7,800 SY / 2,000 # = 858 Tons
4. 25 mm mix – 880 # x 7,800 SY / 2,000 # = 3,432 Tons

Right-of-Way (ROW) Cost:
Estimated right-of-way cost was calculated by DW and given as $16.43 per SF. Therefore, 28,400 LF + 6,700 LF = 35,100 LF x 2 LF (width) = 70,200 SF

Unclassified Embankment, Soil: 28,400 LF+6,700 LF = 35,100 LF x 2 LF width x 10 LF avg. depth = 702,000 CF / 27 = 26,000 CY

18" Storm Drain Cross-Drain Pipes: No drainage plans available for review. 1,000 LF estimated in report. Will assume 25% cross drains will be affected by lane width reduction. Therefore use 250 LF.

Bridge Width Decrease: Two bridge structures to be reduced by 1.0 LF each lane x 2 lanes each:
1. Betty Creek at 99 LF in length x 2 LF in width = 198 SF
2. E. Tennessee River bridge at120 LF in length x 2 LF in width = 240 SF

DEVELOPMENT AND RECOMMENDATION PHASE

US 441/SR 15 Widening and Median Construction

IDEA No.:	PAGE No.:	CREATIVE IDEA:
B-2	1 of 5	Use wide sidewalks as multi-use trails throughout urban shoulder section in lieu of sidewalks and separate bicycle lanes.

Comp By: AW Date: 06/23/09 Checked By: DCW Date: 06/23/09

Original Concept:

The original concept calls for the use of 4' bicycle lanes on each side of US 441/SR 15 where curb and gutter is used. The only exception to this is through the community of Dillard.

Proposed Change:

Eliminate the bicycle lanes and widen the sidewalks from 5' to 10' to be used as multi-use trails.

Justification:

By eliminating the 4' bicycle lanes on each side, the footprint of the project is narrowed by 8' which reduces the width of required right-of-way and reduces the amount of full depth paving. The 16' wide shoulders can accommodate the extra 5' width without additional widening.

Safety is improved by putting bicycle traffic behind the curb, thus separating it from vehicular traffic.

Additionally, this proposed change is already being proposed for a section of the project.

See VE Item B-3, page 5 of 5, for calculations of R/W unit costs.

LIFE CYCLE COST SUMMARY	CAPITAL COST	FUTURE COST	PRESENT WORTH
INITIAL COST - Original	7,747,000		
- Proposed	1,542,000		
- Savings	6,205,000		6,205,000
FUTURE COST - Savings			-0-
TOTAL PRESENT WORTH SAVINGS			**6,205,000**

SKETCH

US 441/SR 15 Widening and Median Construction	ITEM N$^{\underline{O}}$: B-2 CLIENT: GDOT Sheet 2 of 5

ORIGINAL SECTION

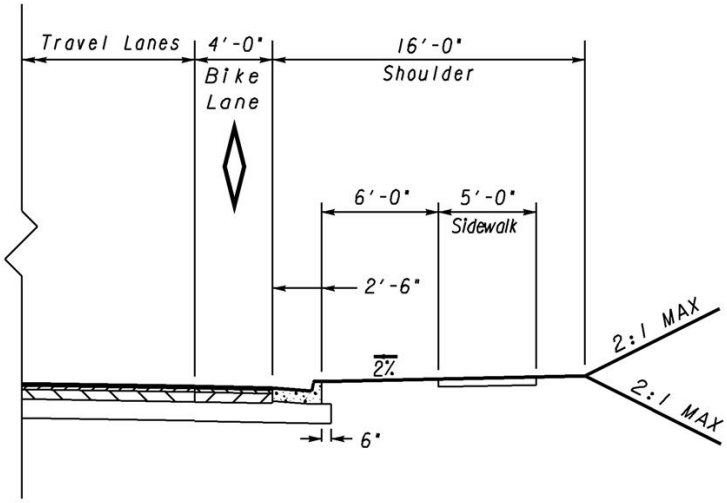

PROPOSED SECTION

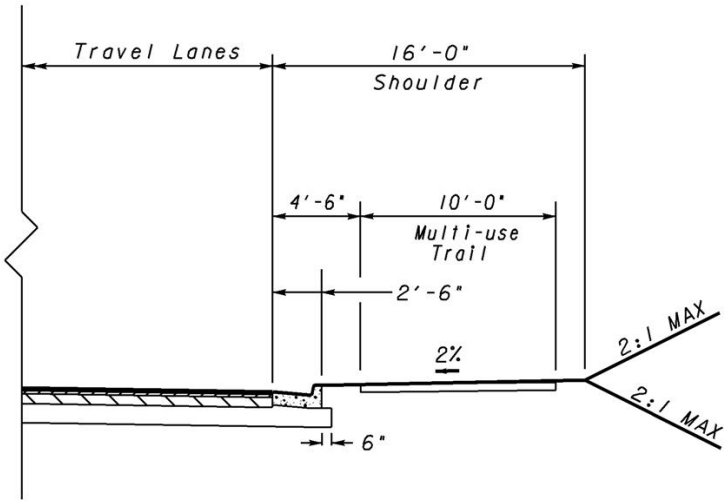

Construction					ITEM: B-2 CLIENT: GDOT Sheet 3 of 5		
CONSTRUCTION ELEMENT		**ORIGINAL ESTIMATE**			**NEW ESTIMATE**		
ITEM	Units	No. Units	Cost/ Unit	Total Cost	No. Units	Cost/ Unit	Total Cost
Borrow	CY	38,000	5.50	209,000			
12.5 mm Superpave	Ton	1,900	64.41	122,379			
19 mm Superpave	Ton	2,500	68.12	170,300			
25 mm Superpave	Ton	10,000	60.01	600,100			
Graded Aggregate Base	Ton	15,600	17.76	277,056			
4" Concrete Sidewalk	SY				28200	32.12	905,784
Right-of-Way	SF	202800	16.43	3,332,004			0
Construction SUBTOTAL				1,378,835			905,784
ROW SUBTOTAL				3,332,004			0
Markups---							
Construction Item 70.2%				968,494			636,223
ROW Item 62.0%				2,067,375			0
TOTAL				7,746,708			1,542,007
TOTAL ROUNDED				7,747,000			1,542,000

Assume length:

Sta. 182+20.00 to Sta. 184+00.00 =	180 LF
Sta. 184+00.00 to Sta. 387+00.00 =	20,300 LF
Sta. 387+00.00 to Sta. 388+60.00 =	160 LF
Sta. 388+60.00 to Sta. 397+20.00 =	860 LF
Sta. 397+20.00 to Sta. 399+00.00 =	180 LF
Sta. 445+00.00 to Sta. 448+40.00 =	340 LF
Sta. 448+40.00 to Sta. 479+90.00 =	3,150 LF
Sta. 479+90.00 to Sta. 481+70.00 =	180 LF
Total	25,350 LF

Above total does not include areas where proposed 10' sidewalks are used.

Earthwork:

Assume average height of fill is 5'
(25,350 LF x 4' x 2 Sides x 5' High) / 27 CF/CY = 37,556 CY Use 38,000 CY
Borrow Unit Cost: 2008 GDOT Item = $5.43/CY Use $5.50/CY

Paving (assume full depth, see assumed design below on sheet 5):

25,350 x 4' x 2 sides = 202,800 SF / 9 SF/SY = 22,533 SY, Use 22,600 SY

Assumed pavement section:
165 LB/SY – 12.5 mm Superpave = 165 x 22,600 / 2000 LB/Ton = 1,865 Ton
Use 1,900 Ton
220 LB/SY – 19 mm Superpave = 220 x 22,600 / 2000 LB/Ton = 2,486 Ton
Use 2,500 Ton
880 LB/SY – 25 mm Superpave = 880 x 22,600 / 2000 LB/Ton = 9,944 Ton
Use 10,000 Ton
12" Graded Aggregate Base Course – (12" / 12" / FT / 3 FT/YD) x 22,600 SY =
7,533 CY x 2.07 Ton/CY = 15,593 Ton, Use 15,600 Ton

Additional Sidewalks:

25,350 x 5' x 2 sides / 9 SF/SY = 28,167 SY, Use 28,200 SY

Right-of-Way:

25,350 LF x 4' x 2 sides= 202,800 SF

FLEXIBLE PAVEMENT DESIGN ANALYSIS

Project: EDS00-0441-00(028) **County:** Rabun
P.I. no.: 122090
Description: US 441/SR 15 Improvements

Traffic Data (NOTE: AADTs are one-way)
24-hour Truck Percentage: 16.00%
AADT initial year of design period: 8,850 vpd (2013)
AADT final year of design period: 14,800 vpd (2033)
Mean AADT (one-way): 11,825 vpd

Design Loading

Mean AADT		LDF		Trucks		18-K ESAL		Total Daily Loads
11,825	*	0.80	*	0.160	*	1.06	=	1,605

Total predicted design period loading = 1605 * 20 * 365 = 11,716,500

Design Data
Terminal Serviceability Index: 2.50
Soil Support: 3.00
Regional Factor: 2.40

PROPOSED FLEXIBLE PAVEMENT STRUCTURE

Material	Thickness Inches	Thickness (mm)	Structural Coefficient	Structural Value
12.5 mm Superpave	1.50	(38)	0.44	0.66
19 mm Superpave	2.00	(51)	0.44	0.88
25 mm Superpave	1.00	(25)	0.44	0.44
	7.00	(178)	0.30	2.10
Graded Aggregate Base	12.00	(305)	0.16	1.92

Required SN = 6.34 Proposed SN = 6.00

>>> Proposed pavement is 5.4% Underdesign <<<

Remarks:

Prepared by Alex Wiley June 23, 2009
Date

Recommended _____
State Consultant Design Engineer **Date**

Approved _____
State Pavement Engineer **Date**

DEVELOPMENT AND RECOMMENDATION PHASE

US 441/SR 15 Widening and Median Construction

IDEA No.:	PAGE No.:	CREATIVE IDEA:
B-3	1 of 5	Reduce urban shoulders from 16' wide to 12' wide

Comp By: AW Date: 06/22/09 Checked By: DCW Date: 6/22/09

Original Concept:

The original concept calls for 16' wide urban shoulders from normal edge of pavement to shoulder break.

Proposed Change:

Use 12' wide urban shoulders in lieu of 16' wide. This will accommodate the 2 ½' wide curb and gutter, the 5' sidewalk, provide a 2' grassed buffer between the curb and the sidewalk, and a 2 ½' shoulder from the sidewalk to shoulder break.

Justification:

Reducing the shoulder width will reduce the width of the shoulders by 4' on each side of the street which will reduce the width of required right-of-way by approximately 8' and reduce the amount of earthwork.

LIFE CYCLE COST SUMMARY	CAPITAL COST	FUTURE COST	PRESENT WORTH
INITIAL COST - Original	5,755,000		
- Proposed	0		
- Savings	5,755,000		5,755,000
FUTURE COST - Savings			-0-
TOTAL PRESENT WORTH SAVINGS			**5,755,000**

SKETCH

US 441/SR 15 Widening and Median Construction	ITEM N^{O} : B-3 CLIENT: GDOT Sheet 2 of 5

ORIGINAL SECTION

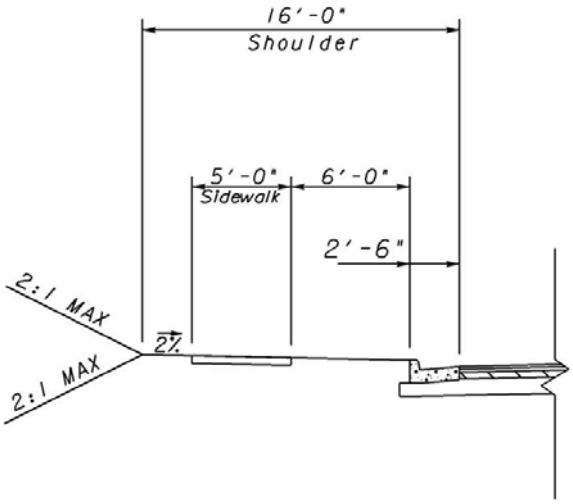

PROPOSED SECTION

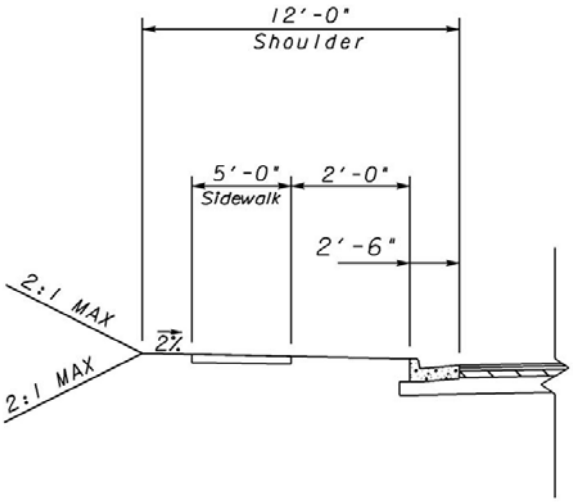

COST WORKSHEET

PROJECT:	US 441/SR 15 Widening and Median Construction	ITEM No: B-3 CLIENT: GDOT Sheet 3 of 5

CONSTRUCTION ELEMENT		ORIGINAL ESTIMATE			NEW ESTIMATE		
ITEM	Units	No. Units	Cost/ Unit	Total Cost	No. Units	Cost/ Unit	Total Cost
Borrow	CY	38000	5.50	209,000			
Right-of-Way	SF	202,800	16.43	3,332,004			
Construction SUBTOTAL				209,000			
ROW SUBTOTAL				3,332,004			0
Markups---							
Construction Item 70.2%				146,802			0
ROW Item 62.0%				2,067,375			0
TOTAL				5,755,181			0
TOTAL ROUNDED				5,755,000			0

Assume length:

Sta. 182+20.00 to Sta. 184+00.00 =	180 LF
Sta. 184+00.00 to Sta. 387+00.00 =	20,300 LF
Sta. 387+00.00 to Sta. 388+60.00 =	160 LF
Sta. 388+60.00 to Sta. 397+20.00 =	860 LF
Sta. 397+20.00 to Sta. 399+00.00 =	180 LF
Sta. 445+00.00 to Sta. 448+40.00 =	340 LF
Sta. 448+40.00 to Sta. 479+90.00 =	3,150 LF
Sta. 479+90.00 to Sta. 481+70.00 =	180 LF
Total	25,350 LF

Above total does not include areas where proposed 10' sidewalks are used.

Earthwork:

Assume average height of fill is 5'
(25,350 LF x 4' x 2 Sides x 5' High) / 27 CF/CY = 37,556 CY Use 38,000 CY
Borrow Unit Cost: 2008 GDOT Item = $5.43/CY Use $5.50/CY

Right-of-Way:

25,350 LF x 4' x 2 sides= 202,800 SF

CALCULATIONS	
US 441/SR 15 Widening and Median Construction	ITEM N^{O} : B-3 CLIENT: GDOT Sheet 5 of 5

Right of Way Unit Costs

Total takes from ROW estimate = 20.95 AC small residential
24.43 AC large residential
41.75 AC Commercial

Total Area = 86.63 AC =
3,773,600 SF

Total ROW estimated costs including scheduling, Court etc = $62,000,000

Average Cost/SF = $62.00/3.7736 = **$16.43**

DEVELOPMENT AND RECOMMENDATION PHASE

US 441/SR 15 Widening and Median Construction

IDEA No.:	PAGE No.:	CREATIVE IDEA:
B-4	1 of 3	Use 5-lane typical section through entire length of project.

Comp By: DPC Date: 6.22.09 Checked By: DCW Date: 6.23.09

Original Concept:

There are approximately 10 different roadway typical sections proposed for this project: a 20-foot raised median section, a 17-foot raised median section, a 12-foot raised median section, a 6-foot raised median section, a variable width raised median with 12-foot travel lanes as well as a 17-foot raised median section with 11-foot travel lanes.

Proposed Change:

It is recommended that we utilize a 5-lane typical section (14-foot wide center lane) with 4 12-foot wide travel lanes from beginning to end of project.

Justification:

The 5-lane section would accommodate current and future local AADT traffic demands, provide unlimited access to the 200 plus side road and driveway movements, appease the local business establishment requests for location access, and reduces safety concerns with a new posted speed limit of 45 MPH throughout the limits of the project. Several existing sections of SR 441 are already working effectively as a 5-lane section.

The reduction in total roadway section would reduce the amount of ROW required for the project as well as reduce the amount of roadway, bridge, and earthwork construction costs.

This concept results in significant cost savings to the project.

LIFE CYCLE COST SUMMARY	CAPITAL COST	FUTURE COST	PRESENT WORTH
INITIAL COST - Original	8,617,000		
- Proposed	5,735,000		
- Savings	2,882,000		2,882,000
FUTURE COST - Savings			-0-
TOTAL PRESENT WORTH SAVINGS			**2,882,000**

							COST WORKSHEET
PROJECT:	**US 441/SR 15 Widening and Median Construction**				ITEM No: B-4 CLIENT: GDOT		
					Sheet 2 of 3		
CONSTRUCTION ELEMENT		**ORIGINAL ESTIMATE**			**NEW ESTIMATE**		
ITEM	Units	No. Units	Cost/ Unit	Total Cost	No. Units	Cost/ Unit	Total Cost
Right-of-Way	SF	220,560	$16.43	3,623,801			
GAB, 12" thick	TN				4,080	17.76	72,461
25 mm recycled superpav, 880#/SY	TN				26,590	60.01	1,595,666
19 mm recycled superpav, 165#/SY	TN				6,650	68.12	452,998
12.5 mm recycled superpav, 220#/SY	TN				4,985	64.41	321,084
Storm drain pipe, 18" H 1-10	LF	250	$37.73	9,433			
Unclassified excavation, soil	CY	81,690	$3.71	303,070			
Conc. curb & gutter, 8" x 30", Tp 2	LF	77,980	$15.79	1,231,304			
Thermoplastic solid traf. Stripe, 5" yel	LF				77,980	0.45	35,091
Thermoplastic skip traf. Stripe, 5" yel	GLF				77,980	0.37	28,853
Thermoplastic pvmt. Marking, arrow	EA				15	100	1,500
Construction SUBTOTAL				1,543,807			
ROW SUBTOTAL				3,623,801			2,507,652
Markups---							
Construction Item 70.2%				1,084,370			1,761,375
ROW Item 62.0%				2,248,423			1,555,898
TOTAL				8,500,401			5,824,925
TOTAL ROUNDED				8,500,000			5,825,000

Mainline station breakdowns per typical section type: All other areas are proposed flush medians already. Total project length is 39,600 LF.

1. Proposed 20-foot median section:
   STA 104+12 to 387+00 = 28,300 LF
   STA 448+40 to 501+80 = 5,340 LF
   STA 404+50 to 409+70 = 520 LF
   STA 417+00 to 419+50 = 250 LF
   STA 425+50 to 428+00 = 250 LF
   Total = 34,670 LF

2. Proposed 17-foot median section:
   STA 387+00 to 404+50 = 1,750 LF
   STA 409+70 to 417+00 = 730 LF
   STA 428+00 to 445+00 = 1,700 LF
   Total = 4,180 LF Grand total = 38,840 LF

Curb and Gutter Section and Thermoplastic Striping:
Remove all curb and gutter on both sides of inside median shoulder and all radius sections located at median breaks. 38,840' x 2 + (15 x 20') = 77,980 LF

GAB and Asphalt SY to Ton calculations:

1. Proposed 14-foot center lane section: (34,670' + 4,180') x 14' / 9 SY = 60,434 SY
   GAB – 135 # x 60,434 SY / 2,000 # = 4,080 Tons
   12.5 mm mix – 165 # x 60,434 SY / 2,000 # = 4,985 Tons
   19 mm mix – 220 # x 60,434 SY / 2,000 # = 6,650 Tons
   25 mm mix – 880 # x 60,434 SY / 2,000 # = 26,590Tons

Right-of-Way (ROW) Cost:
Estimated right-of-way cost was calculated by DW and given as $16.43 per SF.

1. 20-foot median section: 20' – 14' = 6' x 34,670' = 208,020 SF
2. 17-foot median section: 17' – 14' = 3' x 4,180' = 12,540 SF

Unclassified Embankment, Soil:

1. 20-foot median: 34,670' x 6' width x 10' avg. depth = 2,080,200 CF / 27 = 77,045 CY
2. 20-foot median: 4,180' x 3' width x 10' avg. depth = 125,400 CF / 27 = 4,645 CY

Total = 81,690 CY

18" Storm Drain Cross-Drain Pipes: No drainage plans available for review. 1,000 LF estimated in report. Will assume 25% cross drains will be affected by lane width reduction. Therefore use 250 LF.

Bridge Width: Existing Betty Creek bridge will be sufficient to leave in place and make no improvements. The E. Tennessee River bridge is to be replaced regardless and does not add cost to the suggestion.

DEVELOPMENT AND RECOMMENDATION PHASE

US 441/SR 15 Widening and Median Construction

IDEA No.:	PAGE No.:	CREATIVE IDEA:
D-1	1 of 4	Use a 17' raised median in lieu of the proposed 20' raised median

Comp By: AW Date: 06/23/09 Checked By: DCW Date: 6/23/09

Original Concept:

With the exception of the area around Dillard, the original concept calls for a 20' raised median.

Proposed Change:

Use a 17' raised median in lieu of the currently proposed 20' raised median.

Justification:

The 17' raised median will function essentially the same as the 20' raised median but will save 3' of right-of-way and earthwork. At the left turn bays it will provide an area 1' wide between the face of curbs to shield the turn lane.

Additionally, a 17' raised median is currently proposed for portions of this project.

LIFE CYCLE COST SUMMARY	CAPITAL COST	FUTURE COST	PRESENT WORTH
INITIAL COST - Original	2,871,000		
- Proposed	0		
- Savings	2,871,000		2,871,000
FUTURE COST - Savings			-0-
TOTAL PRESENT WORTH SAVINGS			**2,871,000**

SKETCH

US 441/SR 15 Widening and Median Construction	ITEM N$^{\underline{O}}$: D-1 CLIENT: GDOT Sheet 2 of 4

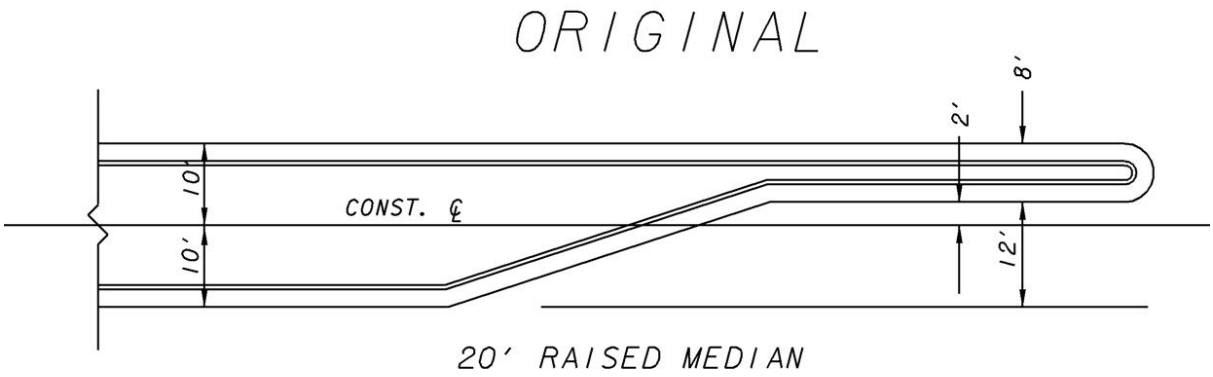

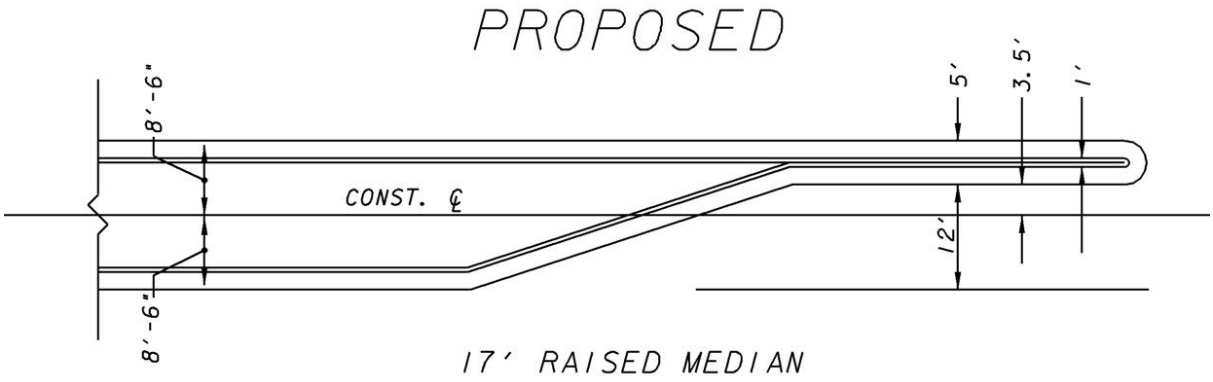

							COST WORKSHEET
PROJECT:	**US 441/SR 15 Widening and Median Construction**				ITEM No: D-1 CLIENT: GDOT		
					Sheet 3 of 4		
CONSTRUCTION ELEMENT		**ORIGINAL ESTIMATE**			**NEW ESTIMATE**		
ITEM	Units	No. Units	Cost/ Unit	Total Cost	No. Units	Cost/ Unit	Total Cost
Borrow	CY	18,800	5.50	103,400			
8" x 30" Concrete Curb & Gutter	LF	130	15.79	2,053			
Right-of-Way	SF	101,100	16.43	1,661,073			0
Construction SUBTOTAL				105,453			0
ROW SUBTOTAL				1,661,073			0
Markups---							
Construction Item 70.2%				74,070			0
ROW Item 62.0%				1,030,629			0
TOTAL				2,871,225			0
TOTAL ROUNDED				2,871,000			0

US 441/SR 15 Widening and Median Construction	ITEM N$^{\underline{O}}$: D-1 CLIENT: GDOT Sheet 4 of 4

Assume length:

Sta. 104+12.50 to Sta. 182+20.00 =	7,808 LF	
Sta. 182+20.00 to Sta. 184+00.00 =	180 LF	
Sta. 184+00.00 to Sta. 387+00.00 =	20,300 LF	
Sta. 387+00.00 to Sta. 388+60.00 =	80 LF	(Transition, use 1/2 of the distance)
Sta. 445+00.00 to Sta. 448+40.00 =	170 LF	(Transition, use 1/2 of the distance)
Sta. 448+40.00 to Sta. 479+90.00 =	3,150 LF	
Sta. 479+90.00 to Sta. 481+70.00 =	180 LF	
Sta. 481+70.00 to Sta. 500+00.00 =	1,830 LF	
Total	33,698 LF	

Above total does not include areas where medians on typical sections are other than 20'.

Earthwork:

Assume average height of fill is 5'
(33,698 LF x 3' x 5' High) / 27 CF/CY = 18,721 CY Use 18,800 CY
Borrow Unit Cost: 2008 GDOT Item = $5.43/CY Use $5.50/CY

Curb & Gutter:

The median will be 3'narrower. This will only affect the length of curb and gutter at the median crossovers. There are 21 crossovers proposed in this section of median. The length of curb & gutter is:

21 x 2 sides x 3' = 126 LF, Use 130 LF

Right-of-Way:

33,698 LF x 3' = 101,094 SF, Use 101,100 SF

DEVELOPMENT AND RECOMMENDATION PHASE

US 441/SR 15 Widening and Median Construction

IDEA No.:	**PAGE No.:**	**CREATIVE IDEA:**
D-3	1 of 4	Use a 16' raised median in lieu of the proposed 20' raised median

Comp By: AW Date: 06/24/09 Checked By: DCW Date: 06/24/09

Original Concept:

With the exception of the area around Dillard, the original concept calls for a 20' raised median.

Proposed Change:

Use a 16' raised median in lieu of the currently proposed 20' raised median.

Justification:

The 16' raised median will function essentially the same as the 20' raised median but will save 4' of right-of-way and earthwork. At the left turn bays a 2' wide raised median can be accommodated by reducing the gutter width to 1' and eliminating the gutter.

LIFE CYCLE COST SUMMARY	CAPITAL COST	FUTURE COST	PRESENT WORTH
INITIAL COST - Original	3,828,000		
- Proposed	-0-		
- Savings	3,828,000		3,828,000
FUTURE COST - Savings			-0-
TOTAL PRESENT WORTH SAVINGS			**3,828,000**

SKETCH

US 441/SR 15 Widening and Median Construction	ITEM N$^{\underline{O}}$: D-3 CLIENT: GDOT Sheet 2 of 4

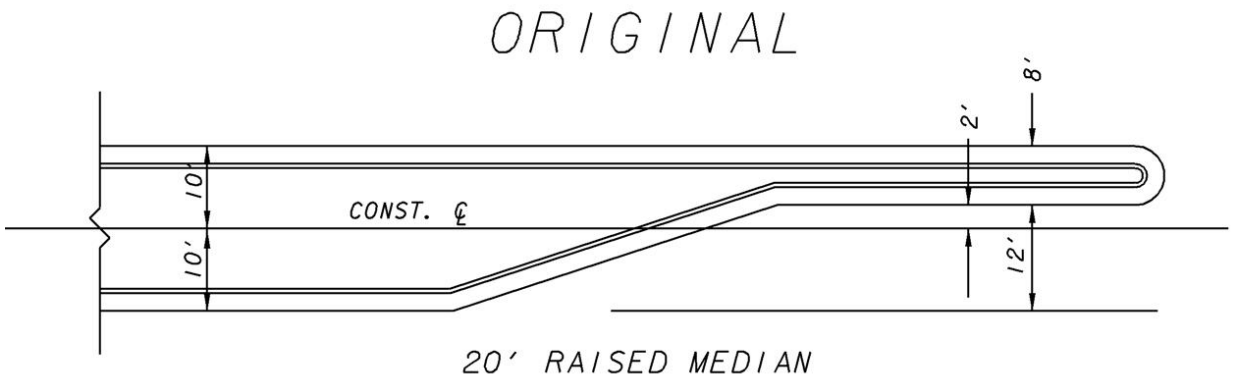

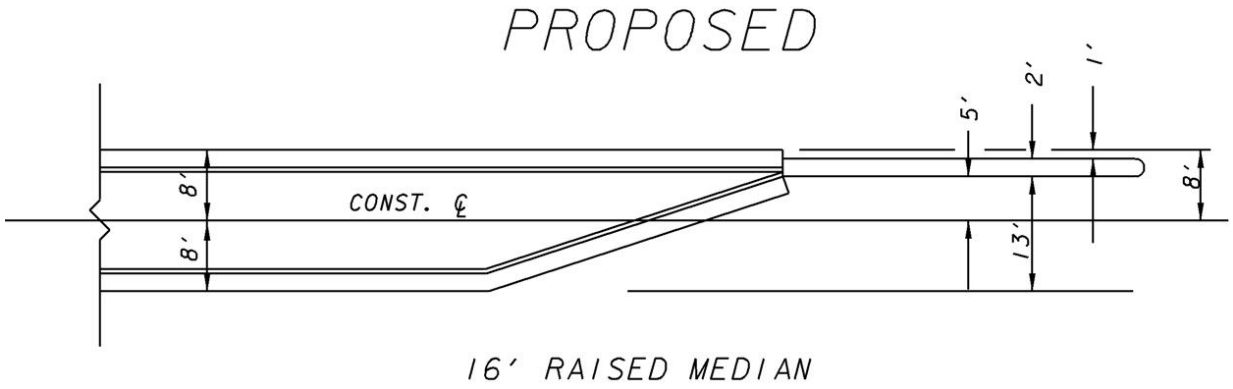

							COST WORKSHEET
PROJECT:	**US 441/SR 15 Widening and Median Construction**				ITEM No: D-3 CLIENT: GDOT		
					Sheet 3 of 4		
CONSTRUCTION ELEMENT		**ORIGINAL ESTIMATE**			**NEW ESTIMATE**		
ITEM	Units	No. Units	Cost/ Unit	Total Cost	No. Units	Cost/ Unit	Total Cost
PROPOSED SAVINGS							
Borrow	CY	25,000	5.50	137,500			
8" x 30" Concrete Curb & Gutter	LF	170	15.79	2,684			
Right-of-Way	SF	134800	16.43	2,214,764			0
Construction SUBTOTAL				140,184			0
ROW SUBTOTAL				2,214,764			0
Markups---							
Construction Item 70.2%				98,465			0
ROW Item 62.0%				1,374,172			0
TOTAL				3,827,586			0
TOTAL ROUNDED				3,828,000			0

US 441/SR 15 Widening and Median Construction	ITEM N$^{\underline{O}}$: D-3 CLIENT: GDOT Sheet 4 of 4

Assume length:

Sta. 104+12.50 to Sta. 182+20.00 =	7,808 LF	
Sta. 182+20.00 to Sta. 184+00.00 =	180 LF	
Sta. 184+00.00 to Sta. 387+00.00 =	20,300 LF	
Sta. 387+00.00 to Sta. 388+60.00 =	80 LF	(Transition, use 1/2 of the distance)
Sta. 445+00.00 to Sta. 448+40.00 =	170 LF	(Transition, use 1/2 of the distance)
Sta. 448+40.00 to Sta. 479+90.00 =	3,150 LF	
Sta. 479+90.00 to Sta. 481+70.00 =	180 LF	
Sta. 481+70.00 to Sta. 500+00.00 =	1,830 LF	
Total	33,698 LF	

Above total does not include areas where medians on typical sections are other than 20'.

Earthwork:

Assume average height of fill is 5'
(33,698 LF x 4' x 5' High) / 27 CF/CY = 24,961 CY Use 25,000 CY
Borrow Unit Cost: 2008 GDOT Item = $5.43/CY Use $5.50/CY

Curb & Gutter:

The median will be 4'narrower. This will only affect the length of curb and gutter at the median crossovers. There are 21 crossovers proposed in this section of median. The length of curb & gutter is:

21 x 2 sides x 4' = 168 LF, Use 170 LF

Right-of-Way:

33,698 LF x 4' = 134,792 SF, Use 134,800 SF

DEVELOPMENT AND RECOMMENDATION PHASE

US 441/SR 15 Widening and Median Construction

IDEA No.:	PAGE No.:	CREATIVE IDEA:
H-1	1 of 4	Use additional walls instead of slopes to reduce the need to purchase new R/W

Comp By: AS Date: 6/23/09 Checked By: DCW Date: 6/23/09

Original Concept:

Sloped fill embankment or cutting of slopes are used to widening the roadway. Three MSE walls are also proposed to be used.

Proposed Change:

The required new Right-of-Way can be reduced by using additional retaining walls i.e., both fill walls like MSE (Mechanically stabilized earth walls) and cut walls like Tie-Back or Reinforced concrete retaining walls. The use of tie back walls is based on the geotechnical information obtained from the project constructed on this Route just south of this project.

Justification:

There are several places where in order to widen the roadway, large areas of new additional R/W is required. Use of walls will help reduce the need for large areas for additional R/W. This also results in significant savings in construction cost of the project.

LIFE CYCLE COST SUMMARY	CAPITAL COST	FUTURE COST	PRESENT WORTH
INITIAL COST - Original	44,890,000		
- Proposed	12,610,000		
- Savings	32,280,000		32,280,000
FUTURE COST - Savings			-0-
TOTAL PRESENT WORTH SAVINGS			**32,280,000**

SKETCH

US 441/SR 15 Widening and Median Construction

ITEM N^{O}: H-1
CLIENT: GDOT
Sheet 2 of 4

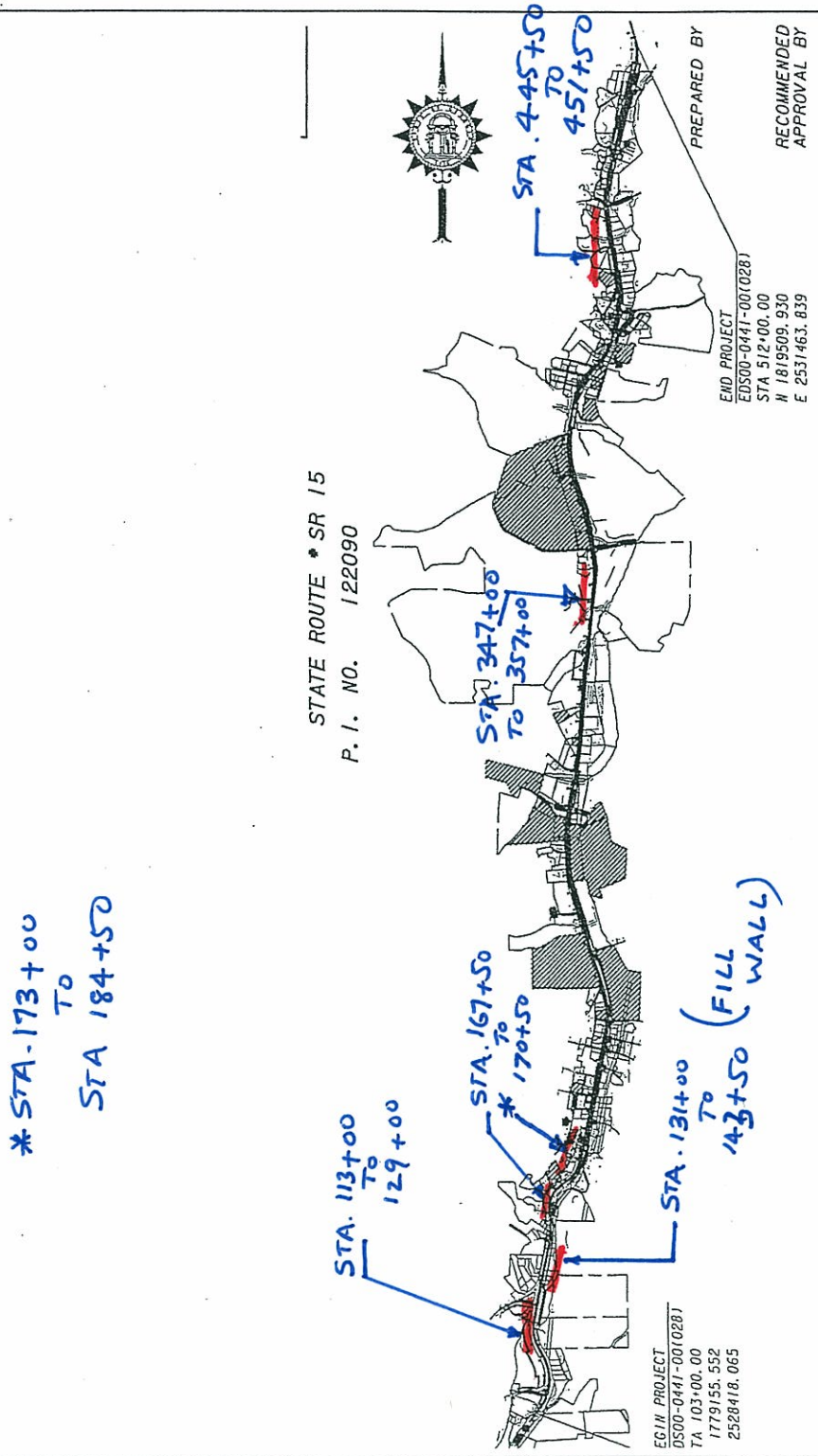

REQUIRED ADDITIONAL WALL LOCATIONS
TO MINIMISE PURCHASE OF NEW R/W

CALCULATIONS	
US 441/SR 15 Widening and Median Construction	ITEM N^{o}: H-1 CLIENT: GDOT Sheet 3 of 4

REQUIRED WALL LOCATIONS

STATION FROM	STATION TO	LENGTH	AVG. HEIGHT	CUT WALL AREA SF	FILL WALL AREA SF	COST/SF	TOTAL COST
113+00	129+00	1600	28	44800		* $65	2,912,000
131+00	143+50	1250	14		17500	** 44.37	776,475
167+50	170+50	300	25	7500		$65	487,500
173+00	184+50	1150	25	28750		$65	1,868,750
347+00	357+00	1000	12	12000		$65	780,000
445+50	451+50	600	15	9000		65	585,000
							$7,409,725

*$65 = tie back wall
**$44.37 = MSE wall

R/W SAVINGS WITH WALLS

STATION FROM	STATION TO	LENGTH	WIDTH	R/W AREA SF	COST/SF	TOTAL COST
113+00	129+00	1600	400	640000	$16.43	10,515,200
131+00	143+50	1250	125	156250	$16.43	2,567,188
167+50	170+50	300	70	21000	$16.43	345,030
173+00	184+50	1150	270	310500	$16.43	5,101,515
347+00	357+00	1000	70	70000	$16.43	1,150,100
445+50	451+50	600	100	60000	$16.43	985,800
						$20,664,833

UNCLASSIFIED EXCAVATION SAVINGS

STATION FROM	STATION TO	LENGTH	WIDTH	AVG HEIGHT FT	CUBIC YARDS	COST/CU YD	TOTAL COST
113+00	129+00	1600	400	28	663,704	6.00	3,982,222
131+00	143+50	1250	125	14	81,019	6.00	486,111
167+50	170+50	300	70	25	19,444	6.00	116,667
173+00	184+50	1150	270	25	287,500	6.00	1,725,000
347+00	357+00	1000	70	12	31,111	6.00	186,667
445+50	451+50	600	100	15	33,333	6.00	200,000
							$6,696,667

TOTAL SAVINGS DUE TO R/W+EXCAVATION	$27,361,500

							COST WORKSHEET
PROJECT:	**US 441/SR 15 Widening and Median Construction**				ITEM No: H-1 CLIENT: GDOT		
					Sheet 4 of 4		
CONSTRUCTION ELEMENT		**ORIGINAL ESTIMATE**			**NEW ESTIMATE**		
ITEM	Units	No. Units	Cost/ Unit	Total Cost	No. Units	Cost/ Unit	Total Cost
NEW R/W FOR USE OF SLOPES	LS	1	LS	20,664,833			
UNCLASSIFIED EXCAVATION	LS	1	LS	6,696,667			
NEW RETAINING WALL LOCATIONS	LS				1	LS	7,409,725
Construction SUBTOTAL				6,696,667			7,409,725
ROW SUBTOTAL				20,664,833			
Markups---							
Construction Item 70.2%				4,703,739			5,204,591
ROW Item 62.0%				12,821,702			0
TOTAL				44,886,941			12,614,316
TOTAL ROUNDED				44,890,000			12,610,000

DEVELOPMENT AND RECOMMENDATION PHASE

US 441/SR 15 Widening and Median Construction

IDEA No.:	PAGE No.:	CREATIVE IDEA: Design Consideration
J-1	1 of 1	Evaluate traffic control cost used in cost estimate

Comp By: Date: Checked By: Date:

Original Concept:

The current GDOT cost estimate shows a base cost of $974,000 for this item. (Item # 150-1000 and 150-5010).

Proposed Change:

Given the quantity of work associated with this project, this item appears to be low.

Justification:

Given the magnitude of work including two bridges and the Cities of Dillard and Mountain City, it appears the nominal 2% of construction costs estimate may be low.

Design Consideration

LIFE CYCLE COST SUMMARY	CAPITAL COST	FUTURE COST	PRESENT WORTH
INITIAL COST - Original			
- Proposed			
- Savings			
FUTURE COST - Savings			
TOTAL PRESENT WORTH SAVINGS			N/A

DEVELOPMENT AND RECOMMENDATION PHASE

US 441/SR 15 Widening and Median Construction

IDEA No.:	PAGE No.:	CREATIVE IDEA:
J-2	1 of 2	Use the existing bridge at Little Tennessee river as it is without widening.

Comp By: Aruna Sastry Date: 6/23/09 Checked By: DCW Date: 6/23/09

Original Concept:

Widen the bridge to accommodate the typical section.

Proposed Change:

Do not widen the existing bridge at Little Tennessee River.

Justification:

The required new width of the bridge for the typical section is 83'-0" (to accommodate 4-lane section with 20'-0" median and sidewalks). Available width of the existing bridge is 82'-0". It is not feasible to widen the bridge for 1 ft. This bridge has a high sufficiency rating of 88 and should function for many years with no work proposed under this contract.

LIFE CYCLE COST SUMMARY	CAPITAL COST	FUTURE COST	PRESENT WORTH
INITIAL COST - Original	290,700		
- Proposed	0		
- Savings	290,700		290,700
FUTURE COST - Savings			-0-
TOTAL PRESENT WORTH SAVINGS			**290,700**

COST WORKSHEET							
PROJECT:	**US 441/SR 15 Widening and Median Construction**				ITEM No: J-2 CLIENT: GDOT		
					Sheet 2 of 2		
CONSTRUCTION ELEMENT		**ORIGINAL ESTIMATE**			**NEW ESTIMATE**		
ITEM	Units	No. Units	Cost/ Unit	Total Cost	No. Units	Cost/ Unit	Total Cost
WIDEN THE EXISTNIG BRIDGE AT LITTLE TENNESSEE RIVER	LS	1	LS	170,775			
PORPOSED CHANGE - NOT TO WIDEN THE BRIDGE					0	0	0
Construction SUBTOTAL				170,775			0
ROW SUBTOTAL							
Markups---							
Construction Item 70.2%				119,952			0
ROW Item 62.0%				0			0
TOTAL				290,727			0
TOTAL ROUNDED				290,700			0

DEVELOPMENT AND RECOMMENDATION PHASE

US 441/SR 15 Widening and Median Construction

IDEA No.:	PAGE No.:	CREATIVE IDEA:
J-3	1 of 3	Use 2″ 19 mm recycled asphalt concrete sidewalks on 3″ GAC in lieu of 4″ concrete sidewalks.

Comp By: DCW Date: 6/24/09 Checked By: AW Date: 6/24/09

Original Concept:

The proposed design features the use of 4” thick, 5-foot wide concrete sidewalks located on both sides of the SR 1 / US 27 corridor and various side streets.

Proposed Change:

The VE Team recommends that the Design Team consider utilizing a 2-inch thick (19 mm asphalt mix), 5-foot wide recycled asphaltic concrete placed on top of a 3-inch GAB base.

Justification:

Concrete materials for sidewalks have typically been specified on most Department projects to date. The recent use of 8 to 12 foot wide multi-purpose trails throughout Georgia communities constructed with recycled asphaltic concrete material has grown rapidly due to its flexibility, ease of construction, schedule reducing, and durability characteristics. Contractor equipment is readily available and asphalt concrete construction production rates are much greater than the time consuming form / pour / finish / break down activities associated with typical concrete flatwork construction.

LIFE CYCLE COST SUMMARY	CAPITAL COST	FUTURE COST	PRESENT WORTH
INITIAL COST - Original	1,428,000		
- Proposed	386,000		
- Savings	1,042,000		1,042,000
FUTURE COST - Savings			-0-
TOTAL PRESENT WORTH SAVINGS			**1,042,000**

COST WORKSHEET							
PROJECT:	**US 441/SR 15 Widening and Median Construction**				ITEM No: J-3 CLIENT: GDOT Sheet 2 of 3		
CONSTRUCTION ELEMENT		**ORIGINAL ESTIMATE**			**NEW ESTIMATE**		
ITEM	Units	No. Units	Cost/ Unit	Total Cost	No. Units	Cost/ Unit	Total Cost
4 ″ Concrete Sidewalk	SY	26,111	32	838,685			
19mm Recycled AC	T				2,154	68.12	146,730
3 inches GAB	T				4,504	17.76	79,991
Construction SUBTOTAL				838,685			226,722
ROW SUBTOTAL							
Markups---							
Construction Item 70.2%				589,093			159,249
ROW Item 62.0%				0			0
TOTAL				1,427,778			385,971
TOTAL ROUNDED				1,428,000			386,000

GAB:

Weight = 2.07T/CY

Sidewalk = $\frac{5 \text{ ft. X } 0.25\text{ft. X } 1 \text{ ft}}{27 \text{ ft}^3/\text{CY}}$. = .046 CY/LF sidewalk = 0.09583T/LF sidewalk

Total length = 23,500 LF X 2 (both sides – see VE Item B-2) = 47,000 ft

Total GAB = 47,000 X 0.09583 = **4,504T**

19mm AC = 165#/SY

Sidewalk = $\frac{5\text{ft X } 1 \text{ ft}}{9\text{SF/SY}}$ = 0.5556SY/LF sidewalk

Total 19mm = $\frac{0.5556 \text{ X } 47{,}000\text{LF X } 165\#/\text{SY}}{2000 \#/ \text{T}}$ = **2,154T 19 mm**

Existing Concrete Sidewalks:

$\frac{5\text{ft X } 47{,}000 \text{ ft}}{9\text{SF/SY}}$ = 26,111 SY

DEVELOPMENT AND RECOMMENDATION PHASE

US 441/SR 15 Widening and Median Construction

IDEA No.:	PAGE No.:	CREATIVE IDEA:
J-4	1 of 2	Delete the 5 inch thermoplastic white edge stripe against the concrete gutter

Comp By: DCW Date: 6/24/09 Checked By: AS Date: 6/24/09

Original Concept:

Current typical signing and marking plans call for the placement of a 5" wide, white thermoplastic edge line striping to be placed on roadway where curb and gutter section is designated.

Proposed Change:

Eliminate all 5" wide white edge line thermoplastic striping next to curb and gutter sections.

Justification:

The elimination of white striping on black asphalt next to bleached white concrete curb and gutter does not diminish directional or safety concerns. This recommendation reverts back to a past GDOT policy where edge line striping was not specified in typical curb and gutter roadway sections.

LIFE CYCLE COST SUMMARY	CAPITAL COST	FUTURE COST	PRESENT WORTH
INITIAL COST - Original	61,300		
- Proposed	-0-		
- Savings	61,300		61,300
FUTURE COST - Savings			-0-
TOTAL PRESENT WORTH SAVINGS			**61,300**

							COST WORKSHEET
PROJECT:	**US 441/SR 15 Widening and Median Construction**				ITEM No: J-4 CLIENT: GDOT		
					Sheet 2 of 2		
CONSTRUCTION ELEMENT		**ORIGINAL ESTIMATE**			**NEW ESTIMATE**		
ITEM	Units	No. Units	Cost/ Unit	Total Cost	No. Units	Cost/ Unit	Total Cost
White solid 5 inch thermoplastic	LF	81,800	0.44	35,992	0		0
Construction SUBTOTAL				35,992			0
ROW SUBTOTAL							
Markups---							
Construction Item 70.2%				25,281			0
ROW Item 62.0%				0			0
TOTAL				61,273			0
TOTAL ROUNDED				61,300			0

APPENDIX

COST MODEL

VALUE ENGINEERING

COST MODEL / DISTRIBUTION

By

Decreasing Item Number

Project No. EDS00-0441-00(028)

US 441/SR 15 Widening and Median Construction

PI No. 122090

Rabun County

June 2009

Element ID.	Item Description	Cost x $1,000	%
A	Right of Way	100,469	53
B	AC Pavement	30,792	16
C	Grading	25,856	14
	83% Cost Line		
D	Concrete median	7,047	4
E	Concrete curb and gutter and concrete gutters	3,447	2
F	Storm drainage	3,017	2
G	Aggregate base and surface courses	2,844	2
H	MSE walls	2,756	2
I	New bridge over Betty Creek	2,540	1
J	Erosion control	1,947	1
K	Concrete sidewalk and driveways	1,768	1
L	Traffic control and field office	1,713	1
M	Utilities	1,399	1
N	Guardrail	741	-
O	Signing and marking	599	-
P	Class A concrete	337	-
Q	Pavement reinf. fabric strips	319	-
R	Widen bridge over Little Tennessee River	290	-
S	Traffic signals	91	-
T	Sanitary manhole	85	-
U	Changeable message sign	73	-
V	Right of way markers	32	-
	TOTAL	**$188,162**	**100%**

INFORMATION PHASE ------- FUNCTION ANALYSIS

US 441/SR 15 Widening and Median Construction

System: Improve Corridor
Function: Improve Safety

ITEM		FUNCTION			INITIAL DOLLARS (x 1,000)		
No.	DESCRIPTION	Verb	Noun	Kind*	Cost	% of Total	Worth
A	Right of Way	Store	Project	S	100,469	53	70,000
B	AC Pavement	Support	Traffic	B	30,792	16	25,000
		Support	Bicycles				
C	Grading	Support	Pavement	S	25,856	14	16,000
		Hold	Slopes				
D	Concrete Median	Divide	Traffic	B	7,047	4	3,700
		Improve	Safety				
		Allow	Turns				
E	Concrete C&G and concrete gutters	Demark	Edge	S	3,447	2	1,600
		Contain	Fluids				
		Drain	Pavement				
F	Storm Drainage	Transport	Fluids	B	3,017	2	1,400
G	Aggregate Base	Support	Pavement	B	2,844	2	2,500
H	MSE Walls	Reduce	R/W	S	2,756	2	5,200
I	New Bridge – Betty Creek	Span	Stream	B	2,540	1	2,414
TOTALS					**178,768**	**96**	**127,814**

CREATIVE PHASE Creative Idea Listing		JUDGMENT PHASE Idea Evaluation	
US 441/SR 15 Widening and Median Construction			
NO.	**CREATIVE IDEA**	**COMMENTS**	**IDEA RATING ****
A	**Right of Way**		
A-1	Use more MSE walls at Sta 113		**See H-1**
A-2	Use 2;1 slopes with guard rail		√
A-3	Use temporary easements vs R/W when purchasing land		√
B	**AC Pavement**		
B-1	Reduce lane widths to 11 feet throughout		√
B-2	Combine bicycle lane with multi-use trail		√
B-3	Reduce shoulder width to 12 feet		√
B-4	Use 5 lane section throughout		√
B-5	Use urban section throughout	Drainage increases makes it not cost effective.	**X**

** √ = Idea will be evaluated; X= idea will be dropped; DC = Design Consideration – presented for consideration by the design team

MACTEC

NO.	CREATIVE IDEA	COMMENTS	IDEA RATING **
D	**Concrete Median**		
D-1	Reduce median width to 17 feet		√
D-2	Reduce median width to 6 feet	Increased construction costs with transitions.	**X**
D-3	Reduce median width to 16 feet		√
E	**Concrete Curb and Gutter**		
E-1	Use asphalt C & G	High truck use would result in damage to curb	**X**
H	**MSE Walls**		
H-1	Use alternate wall type – tie backs and increase use		√
H-2	Allow Keystone walls	Proprietary wall	**X**
H-3	Use rock face and no walls where possible	Dependant on geotechnical investigation	**DC**
I	**New Bridge at Betty Creek**		
I-1	Use culvert in lieu of bridge	Would require 6+ 10 X 10 units – not cost effective	**X**

** √ = Idea will be evaluated; X= idea will be dropped; DC= Design Consideration – presented for consideration by the design team

NO.	CREATIVE IDEA	COMMENTS	IDEA RATING **
J	**Other**		
J-1	Evaluate traffic control cost	Appears low for project size	**DC**
J-2	Do not widen Little Tennessee River bridge		√
J-3	Use asphalt sidewalks		√
J-4	Delete white edge stripe on pavement, use concrete		√

** √ = Idea will be evaluated; X= idea will be dropped; DC= Design Consideration – presented for consideration by the design team

MACTEC

VE STUDY SIGN-IN SHEET

Project No.: EDS00-0441-00(028) County: Rabun PI No.: 122090 Date: June 22-25, 2009

	NAME	EMPLOYEE ID NO.	DOT OFFICE OR COMPANY	PHONE NUMBER	EMAIL ADDRESS
✓	Lisa L. Myers	00244168	Engineering Services	404-631-1770	lmyers@dot.ga.gov
	James K. Magnus	00208161	Construction	404-631-1971	jmagnus@dot.ga.gov
	Ken Werho	00258268	Traffic Operations	404-635-8144	kwerho@dot.ga.gov
✓	Ron Wishon	00208180	Engineering Services	404-631-1753	rwishon@dot.ga.gov
✓	Matt Sanders	00284154	Engineering Services	404-631-1752	msanders@dot.ga.gov
✓	ALEX WILEY		MACTEC	770-421-3481	awiley@mactec.com
✓	DAVE WOHLSCHEID		MACTEC	(c) 571-217-0808	dewohlscheid@mactec.com
✓	GEORGE DBARANEC		MACTEC	770-421-3346	GADBARANEC@MACTEC.COM
✓	DAN COGAN		KEA GROUP	404-290-6424	dcogan@keagroup.com
✓	ARUNA SASTRY		SASTRY AND ASSOC.	678-366-9375	sast9375@bellsouth.net
✓	Mike Stoffers		KCI Technologies	678-990-6211	mike.stoffers@kci.com
✓	Greg Nicolas		KCI Technologies	678-990-6215	greg.nicolas@kci.com
✓	STAN HICKS		KCI TECHNOLOGIES	678-990-6210	STAN.HICKS@kci.COM
✓	Michael Haithcock	00229219	GDOT Program Del	770-227-2454	mhaithcock@dot.ga.gov
	Jim King	[illegible]	GDOT Bridge	404-631-1913	jking@dot.ga.gov
(c)	Alexis John	00862199	GDOT OEL	(404) 699-4409	ajohn@dot.ga.gov
HR	JANET CROUSE		KCI TECHNOLOGIES	678-990-6214	janet.crouse@kci.com
	HIRAL PATEL	00327662	OPD	770-535-5759	hpatel@dot.ga.gov
	DAVID NORWOOD	00327661	OPD	404-631-1581	dnorwood@dot.
	Bobby Hilliard	00274443	OPD	404-631-1122	bhilliard@dot.ga.gov

MACTEC