ORIGINAL TO GENERAL FILES

D.O.T. 66

RECEIVED
AUG 17 2004

DEPARTMENT OF TRANSPORTATION
STATE OF GEORGIA

INTERDEPARTMENT CORRESPONDENCE

FILE EDS-441(28) Rabun County
P.I. No. 122090
US 441/SR 15 Improvements

OFFICE Preconstruction

DATE August 16, 2004

FROM Margaret B. Pirkle, P.E., Assistant Director of Preconstruction

TO SEE DISTRIBUTION

SUBJECT **REVISED PROJECT CONCEPT REPORT APPROVAL**

Attached for your files is the approval for subject project.

MBP/cj

Attachment

DISTRIBUTION:

David Mulling
Harvey Keepler
Jerry Hobbs
Jamie Simpson
Michael Henry
Phillip Allen
Joe Palladi (file copy)
Brent Story
Todd Long
BOARD MEMBER

DEPARTMENT OF TRANSPORTATION
STATE OF GEORGIA

INTERDEPARTMENT CORRESPONDENCE

RECEIVED
JUL 12 2004

FILE: EDS-441(28)
P.I. No. 122090
Rabun County

OFFICE: Environment/Location

DATE: June 30, 2004

HDK/KET

FROM: Harvey D. Keepler, State Environmental/Location Engineer

TO: Meg Pirkle, Assistant Director of Preconstruction

SUBJECT: **Revised Project Concept Report** – US 441/ SR 15 Improvements, Rabun County

Attached is the original copy of the revised concept Report for your further handling for approval in accordance with the Plan Development Process (PDP).

In order to reduce environmental impacts and enhance continuity throughout the project, the typical section and design speed for project EDS-441(28) in Rabun County is proposed to be revised. The typical section is recommended to be revised to a 20-foot raised median section, varying between rural and urban sections throughout the project. Rural sections would be built from the beginning of the project to the southern Mountain City limits and from SR 246 to the North Carolina state line. Urban typical sections would be constructed between the southern Mountain City limits and SR 246. The design speed is proposed to be revised to 45 mph throughout the project. It is recommended that a design exception be requested during the design phase that would allow posting the speed limit at 45 mph throughout the project.

The revised concept as presented herein and submitted for approval is not listed in the current State Transportation Improvement Program (STIP), but is consistent with that which is included in the Department's Construction Work Program (CWP).

DATE: 8/8/04

State Transportation Planning Administrator

HDK/KET/drp

Attachments

Distribution:
David Mulling, Project Review Engineer
Phillip Allen, State Traffic Safety & Design Engineer
Joe Palladi, State Transportation Planning Administrator
Jamie Simpson, State Transportation Financial Management Administrator
Brent Story, State Consultant Design Engineer
Todd Long, Gainesville District Engineer
Paul Liles, State Bridge & Structural Design Engineer

REVISED PROJECT CONCEPT REPORT
EDS-441(28) - RABUN COUNTY

Need and Purpose:
US 441 is the primary north-south corridor in northeast Georgia and it is a major tourist route through the Great Smokey and Blue Ridge Mountains. The proposed widening and construction of a median would reduce congestion and enhance the traffic flow, while improving the operational characteristics and safety along US 441.

Project location:
Project EDS-441(28) begins at mile post 12.3 along US 441/SR 15. It continues northward along US 441/SR 15 crossing the north city limit of Clayton at mile post 12.6. It then continues along US 411/SR 15 crossing the south city limit of Mountain City at mile post 13.9 and the north city limit of Mountain City at mile post 15.3. It then continues along US 411/SR 15 crossing the Little Tennessee River at mile post 15.9. Continuing northward along US 441/SR 15, crossing the south city limit of Dillard and crossing Betty Creek at mile post 18.0 and then crossing the north city limit of Dillard at mile post 19.2. The project ends at the North Carolina state line mile post 19.7. Length of the project is 7.4 miles

Description of the approved concept:
Project EDS-441(28) in Rabun County is proposed to improve US 441/SR 15 from CS 500/Clayburn Road, just inside the Clayton north city limits, northward to the North Carolina state line. US 441 is planned to be widen to have four lanes with a 20 foot raised median throughout the limits of the project. From the beginning of the project to approximately 0.5 mile north of Clayton, US 441/SR 15 would be widened on the east side with open ditch drainage on a minimum right-of-way of 150 feet. At that point, the widening would shift and US 441/SR15 would be widened on the west side to the south city limits of Mountain City. From the city limits to Johnson Avenue, the widening would shift back to east side with curb and gutter on a minimum right-of-way of 95 feet. After Johnson Avenue, the proposed widening would become symmetrical with open ditch drainage on a minimum right-of-way of 134 feet. and continue northward to the south city limits of Dillard. From that point to CR 6/Greenwood Road, US 441/SR 15 would be widened symmetrically with curb and gutter on a minimum right-of-way of 100 feet, then shift to west side widening with open ditches on 144 feet minimum right-of-way to the end of the project.

The speed limit inside the city limits of Clayton, Mountain City, and Dillard is posted at 45 mph. However, the section of roadway between Clayton and Mountain City has a posted speed limit of 55 mph with a vertical and horizontal alignment that is substandard for 55 mph speed design. It is recommended that the speed design between the two towns be 45 mph in order to retain the existing pavement. This will require reducing the speed limit for 1.1 mile section from 55 mph to 45 mph. The proposed speed design for this project would then be 45 mph inside the cities of Clayton, Mountain City, and Dillard and 55 mph outside those cities, Except for the 1.1 mile stretch between Clayton and Mountain City where the proposed speed design is 45 mph. Access would be by permit. The total length of this project is 7.4 miles.

PDP Classification: Major __X__ Minor _____

Federal Oversight: Full Oversight ( ), Exempt(**X**), State Funded( ), or Other ( )

Functional Classification: Rural and Urban Arterial

U. S. Route Number(s): 441 **State Route Number(s):** 15

Traffic (AADT) as shown in the approved concept:

Current Traffic:	Design Traffic:
Year: 1996 AADT: 9200-18,500	Year: 2016 AADT: 14,800-30,000

Proposed features to be revised:

- **Typical Section:** In order to reduce environmental impacts and enhance continuity throughout the project, the typical section for project EDS-441(28) in Rabun County is proposed to be revised.
- **Design Speed:** In order to enhance continuity throughout the project, the design speed for project EDS-441(28) in Rabun County is proposed to be revised.

Describe the revisions to be approved:

- **Typical Section:** The typical section is recommended to be revised to a 20-foot raised median section, varying between rural and urban throughout the project. Rural sections would be built from the beginning of the project to the southern Mountain City limits and from SR 246 to the North Carolina state line. Urban typical sections would be constructed between the southern Mountain City limits and SR 246 to minimize social impacts and impacts to eligible historic resources located on both sides of US 441/SR 15 throughout this segment of roadway. Maintaining the 20-foot raised median through out the project would also eliminate alternating between 20-foot and 44-foot medians in the short distances between the towns, thereby enhancing continuity and facilitating the connection to the existing flush median sections at the north and south termini of the project. The proposed right-of-way would vary from 100 feet to 420 feet for the urban typical section and 135 feet to 380 feet for the rural typical sections.

- **Design Speed:** The design speed is proposed to be revised to 45 mph throughout the project in coordination with the 20-foot raised median typical section. It is recommended that a design exception be requested during the design phase that would allow posting the speed limit at 45 mph throughout the project.

Updated traffic data (AADT):

Current Traffic:	Design Traffic:
Year: 2010 AADT: 13,500 -19,000	Year: 2030 AADT: 21,700-30,400

Programmed/Schedule:

P.E.: 2002 R/W: 2007 Construction: ~~2008~~ 2011

Revised cost estimates:

1. Construction cost including inflation and E&C $ 24,244,000
2. Right-of-way $ 42,900,000

Is the project located in a Non-attainment area? No

Recommendation: It is recommended that the proposed revisions to the concept be approved for implementation.

Attachments:

1. Sketch Map
2. Cost Estimate
3. Typical Sections

Concur: _____
Director of Preconstruction

Approve: _____
Chief Engineer

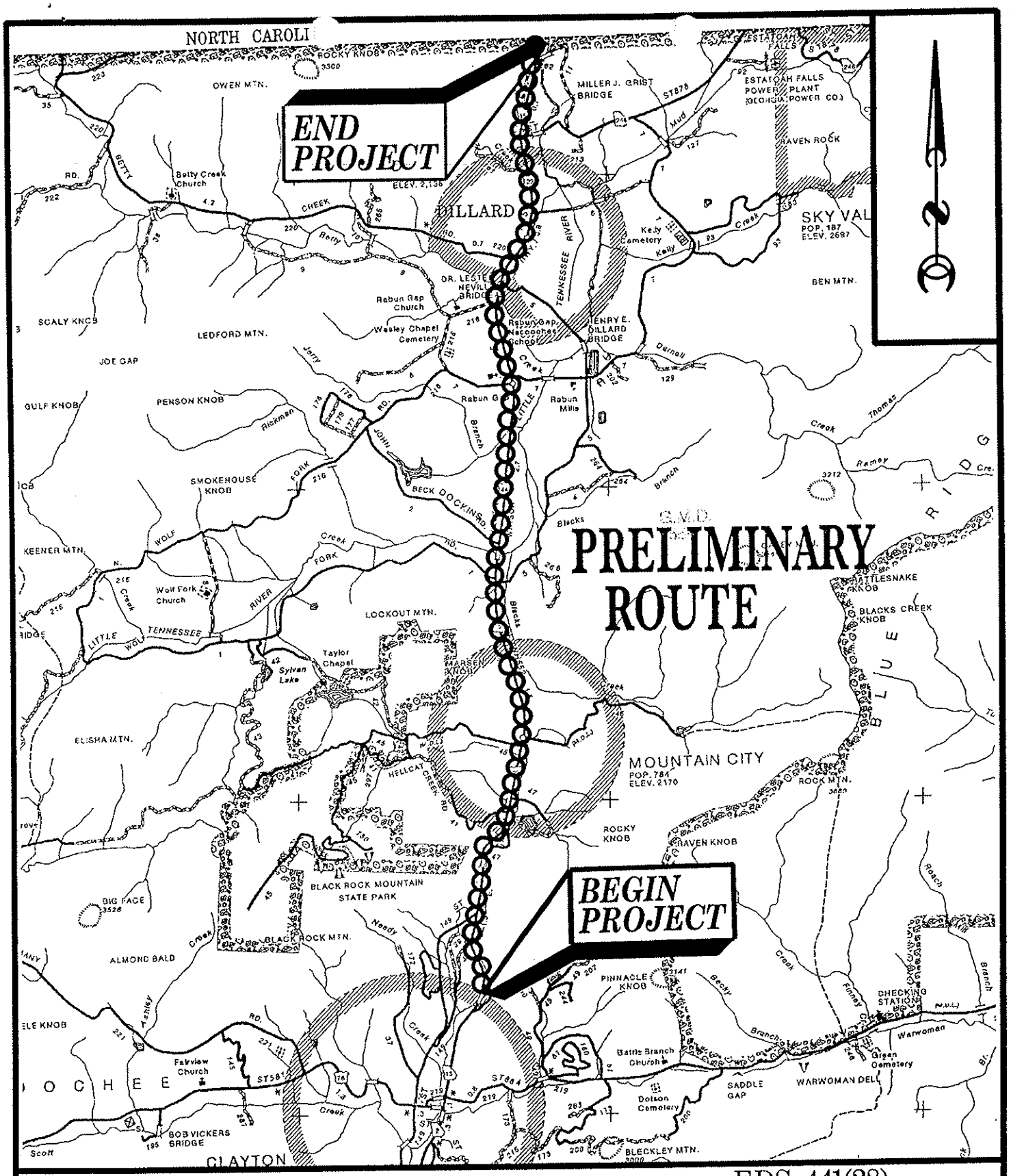

0 1 2

SCALE IN MILES

LOCATION

EDS–441(28)
RABUN COUNTY

US 441 IMPROVEMENTS:
FROM CLAYTON TO
NORTH CAROLINA STATE LINE

P.I.# 122090

SOURCE: GENERAL HIGHWAY MAP, BIBB CO., GEORGIA
PREPARED BY THE GEORGIA DEPARTMENT OF TRANSPORTATION, 1986

CONCEPT COST ESTIMATE

July 9, 2004 1:51 PM

County(s) Rabun

PI Number 122090 **Project Number** EDS-441(28)

Project Name US 441 Improvements from Clayton to N.C. State lin **Project Length** 7.4 Miles

Project Description

Existing Roadway

Comments

TRAFFIC:

Current Design Year	2010	**Daily Volume (AADT)**	19,000
Future Design Year	2030	**Daily Volume (AADT)**	30,400

[X] **Concept Estimate** [ ] **Feasibility Estimate**

Typical Section(s) Used in Estimate	Typical Section Length	
Rural Widening: 2 TO 4-Lanes With 20ft Raised Median Widen On One Side	2.40	Miles
Urban Widening: 2 TO 4-Lanes With 20ft Raised Median Widen Symmetrical	5.00	Miles
Rural New Location: 2-Lanes with 24 ft Pavement	0.60	Miles
Urban New Location: 2-Lanes with 24 ft Pavement	0.60	Miles
		Miles
		Miles

Prepared By Tony Jones

MAJOR STRUCTURES

Note! All distances are in feet

Bridges: Stream Crossings & Grade Separations

NO	LOCATION	QTY	CROSSING TYPE	WIDTH	LENGTH	UNIT COST	TOTAL
1	Little Tennessee River	1	Stream-Widen	6.50	99.0	120.00	77,000
2	Betty Creek	1	Stream-Widen	27.00	120.0	120.00	389,000
3							
4							
5							
6							
7							
8							
9							
10							
11							
12							

Bridge Culverts

NO	LOCATION	TYPE / W x H / FILL	LENGTH	UNIT COST	TOTAL
1	File Street	Single / 6 x 4 / 30	100.0	281.57	28,000
2	State Line Street	Single / 5 x 4 / 10	40.0	266.40	11,000
3					
4					
5					
6					
7					
8					

Walls

NO	LOCATION	TYPE	HEIGHT	LENGTH	UNIT COST	TOTAL
1	Begining on west side of roadway	MSE	10.0	1,800.0	65.00	1,170,000
2	South Moutain City Limits on east side of road	MSE	7.0	700.0	65.00	319,000
3	At Church in Dillard ont west side of roadway	MSE	5.0	150.0	65.00	49,000
4	Piggly Wiggly	MSE	25.0	900.0	65.00	1,463,000
5						
6						

MAJOR STRUCTURES SUBTOTAL $ 3,506,000

Typical Section

Rural Widening: 2 To 4-Lanes with 20 ft Raised Median Widen On One Side

Typical Section Length 2.40 **Miles** **Right-of-Way Width** 165 **Feet**

GRADING AND DRAINAGE

	QUANTITY		UNIT COST	TOTAL
1. EARTHWORK				
a. Unclassified Excavation Soil	180,000	CY	3.71	668,000
b. Unclassified Excavation Rock	10,000	CY	10.00	100,000
c. Borrow Excavation		CY		
2. MINOR DRAINAGE	2.40	MI	119,182	286,000
GRADING AND DRAINAGE SUBTOTAL				$1,054,000

BASE AND PAVING

	THICKNESS and SPREAD RATE	QUANTITY		UNIT COST	TOTAL
1. GRADED AGGREGATE BASE	10"	24,180	TN	16.28	394,000
2. ASPHALT PAVING					
a. Asph Conc 9.5 mm Superpave	1 1/2" (165 LB/SY)	4,281	TN	46.82	200,000
b. Asph Conc 19 mm Superpave	3" (330 LB/SY)	7,467	TN	44.91	335,000
c. Asph Conc 25 mm Superpave	4" (440 LB/SY)	7,648	TN	42.13	322,000
d. Bituminous Tack Coat		5,159	GL	1.10	6,000
3. CONCRETE PAVING					
a. Curb and Gutter		23,804	LF	9.18	219,000
b. Miscellaneous		2.40	MI	17,005	41,000
4. OTHER PAVING					152,000
BASE AND PAVING SUBTOTAL					$1,669,000

LUMP ITEMS

	QUANTITY		UNIT COST	TOTAL
1. TRAFFIC CONTROL	2.40	MI	65,043	156,000
2. CLEARING AND GRUBBING	48.00	AC	6,000	288,000
3. EROSION CONTROL	2.40	MI	117,160	281,000
4. SIGNING & MARKING	2.40	MI	25,577	61,000
5. MISCELLANEOUS	2.40	MI	31,355	75,000
LUMP ITEM SUBTOTAL				$861,000

MISCELLANEOUS PROJECT ITEMS

	QUANTITY		UNIT COST	TOTAL
1. GUARDRAIL	20,000	LF	9.56	191,000
2. GUARDRAIL ANCHORS	30	EA	399.24	12,000
3. DETOURS		MI	350,897	
4. SPECIAL FEATURES				
MISCELLANEOUS SUBTOTAL				$203,000

Typical Section

Urban Widening: 2 To 4-Lanes with 20 ft Raised Median Widen Symmetrical

Typical Section Length 5.00 **Miles** **Right-of-Way Width** 100 **Feet**

GRADING AND DRAINAGE

	QUANTITY		UNIT COST	TOTAL
1. EARTHWORK				
a. Unclassified Excavation Soil	330,000	CY	3.71	1,224,000
b. Unclassified Excavation Rock	1,000	CY	10.00	10,000
c. Borrow Excavation		CY		
2. MINOR DRAINAGE	5.00	MI	543,291	1,304,000
GRADING AND DRAINAGE SUBTOTAL				$2,538,000

BASE AND PAVING

	THICKNESS and SPREAD RATE	QUANTITY		UNIT COST	TOTAL
1. GRADED AGGREGATE BASE	10"	79,684	TN	16.28	1,297,000
2. ASPHALT PAVING					
a. Asph Conc 9.5 mm Superpave	1 1/2" (165 LB/SY)	10,687	TN	46.82	500,000
b. Asph Conc 19 mm Superpave	3" (330 LB/SY)	21,552	TN	44.91	968,000
c. Asph Conc 25 mm Superpave	4" (440 LB/SY)	29,211	TN	42.13	1,231,000
d. Bituminous Tack Coat		16,346	GL	1.10	18,000
3. CONCRETE PAVING					
a. Curb and Gutter		110,646	LF	9.18	1,016,000
b. Miscellaneous		5.00	MI	113,994	570,000
4. OTHER PAVING					560,000
BASE AND PAVING SUBTOTAL					$6,160,000

LUMP ITEMS

	QUANTITY		UNIT COST	TOTAL
1. TRAFFIC CONTROL	5.00	MI	115,304	577,000
2. CLEARING AND GRUBBING	60.61	AC	6,000	364,000
3. EROSION CONTROL	5.00	MI	130,420	652,000
4. SIGNING & MARKING	5.00	MI	47,818	239,000
5. MISCELLANEOUS	5.00	MI	110,832	554,000
LUMP ITEM SUBTOTAL				$2,386,000

Typical Section

Rural New Location: 2-Lanes with 24 ft Pavement

Typical Section Length 0.60 **Miles** **Right-of-Way Width** 100 **Feet**

GRADING AND DRAINAGE

	QUANTITY		UNIT COST	TOTAL
1. EARTHWORK				
a. Unclassified Excavation Soil	10,000	CY	3.71	37,000
b. Unclassified Excavation Rock	2,000	CY	10.00	20,000
c. Borrow Excavation		CY		
2. MINOR DRAINAGE	0.60	MI	36,170	87,000
GRADING AND DRAINAGE SUBTOTAL				$144,000

BASE AND PAVING

	THICKNESS and SPREAD RATE	QUANTITY		UNIT COST	TOTAL
1. GRADED AGGREGATE BASE	10"	6,588	TN	16.28	107,000
2. ASPHALT PAVING					
a. Asph Conc 9.5 mm Superpave	1 1/2" (165 LB/SY)	1,074	TN	46.82	50,000
b. Asph Conc 19 mm Superpave	3" (330 LB/SY)	2,166	TN	44.91	97,000
c. Asph Conc 25 mm Superpave	4" (440 LB/SY)	1,912	TN	42.13	81,000
d. Bituminous Tack Coat		1,370	GL	1.10	2,000
3. CONCRETE PAVING					
a. Curb and Gutter			LF		
b. Miscellaneous		0.60	MI	17,255	10,000
4. OTHER PAVING					35,000
BASE AND PAVING SUBTOTAL					$382,000

LUMP ITEMS

	QUANTITY		UNIT COST	TOTAL
1. TRAFFIC CONTROL	0.60	MI	10,696	6,000
2. CLEARING AND GRUBBING	7.27	AC	6,000	44,000
3. EROSION CONTROL	0.60	MI	174,425	105,000
4. SIGNING & MARKING	0.60	MI	8,116	5,000
5. MISCELLANEOUS	0.60	MI	20,085	12,000
LUMP ITEM SUBTOTAL				$172,000

Typical Section

Urban New Location: 2-Lanes with 24 ft Pavement

Typical Section Length 0.60 **Miles** **Right-of-Way Width** 100 **Feet**

GRADING AND DRAINAGE

	QUANTITY		UNIT COST	TOTAL
1. EARTHWORK				
a. Unclassified Excavation Soil	10,000	CY	3.71	37,000
b. Unclassified Excavation Rock	2,000	CY	10.00	20,000
c. Borrow Excavation		CY		
2. MINOR DRAINAGE	0.60	MI	101,281	243,000
GRADING AND DRAINAGE SUBTOTAL				$300,000

BASE AND PAVING

	THICKNESS and SPREAD RATE	QUANTITY		UNIT COST	TOTAL
1. GRADED AGGREGATE BASE	10"	5,216	TN	16.28	85,000
2. ASPHALT PAVING					
a. Asph Conc 9.5 mm Superpave	1 1/2" (165 LB/SY)	697	TN	46.82	33,000
b. Asph Conc 19 mm Superpave	3" (330 LB/SY)	1,411	TN	44.91	63,000
c. Asph Conc 25 mm Superpave	4" (440 LB/SY)	1,912	TN	42.13	81,000
d. Bituminous Tack Coat		1,069	GL	1.10	1,000
3. CONCRETE PAVING					
a. Curb and Gutter		15,848	LF	9.18	145,000
b. Miscellaneous		0.60	MI	24,074	14,000
4. OTHER PAVING					42,000
BASE AND PAVING SUBTOTAL					$464,000

LUMP ITEMS

	QUANTITY		UNIT COST	TOTAL
1. TRAFFIC CONTROL	0.60	MI	12,882	8,000
2. CLEARING AND GRUBBING	7.27	AC	6,000	44,000
3. EROSION CONTROL	0.60	MI	131,844	79,000
4. SIGNING & MARKING	0.60	MI	15,174	9,000
5. MISCELLANEOUS	0.60	MI	20,461	12,000
LUMP ITEM SUBTOTAL				$152,000

ESTIMATE SUMMARY

TYPICAL SECTION		COST (per mile)
1. Rural Widening: 2 To 4-Lanes with 20 ft Raised Median Widen On One Side	$	1,493,000
2. Urban Widening: 2 To 4-Lanes with 20 ft Raised Median Widen Symmetrical	$	2,217,000
3. Rural New Location: 2-Lanes with 24 ft Pavement	$	1,163,000
4. Urban New Location: 2-Lanes with 24 ft Pavement	$	1,527,000

PROJECT COST		
A. MAJOR STRUCTURES	$	3,506,000
B. GRADING AND DRAINAGE	$	4,036,000
C. BASE AND PAVING	$	8,675,000
D. LUMP ITEMS	$	3,571,000
E. MISCELLANEOUS	$	203,000
SUBTOTAL CONSTRUCTION COST	$	19,991,000
ENGINEERING & CONTINGENCIES (10%)	$	1,999,000
INFLATION 2 yr(s) @ 5 % per yr	$	2,254,000
GRAND TOTAL CONSTRUCTION COST	$	24,244,000

EDS-441(28) RABUN COUNTY

20' RAISED MEDIAN RURAL SECTION
45 MPH SPEED DESIGN

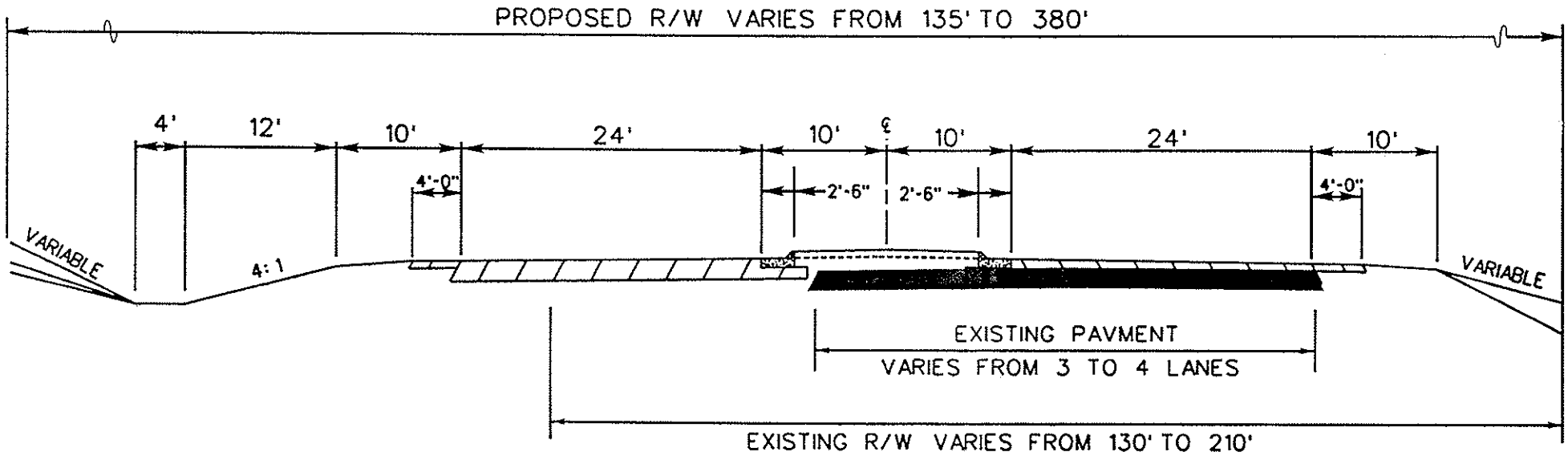

TYPICAL CROSS SECTION

1. FROM THE CLAYTON CITY LIMITS TO MOUNTAIN CITY LIMITS
2. FROM SR 246/HIGHLANDS ROAD TO THE NORTH CAROLINA STATE LINE

NOT TO SCALE

EDS-441(28) RABUN COUNTY

20' RAISED MEDIAN URBAN SECTION
45 MPH SPEED DESIGN

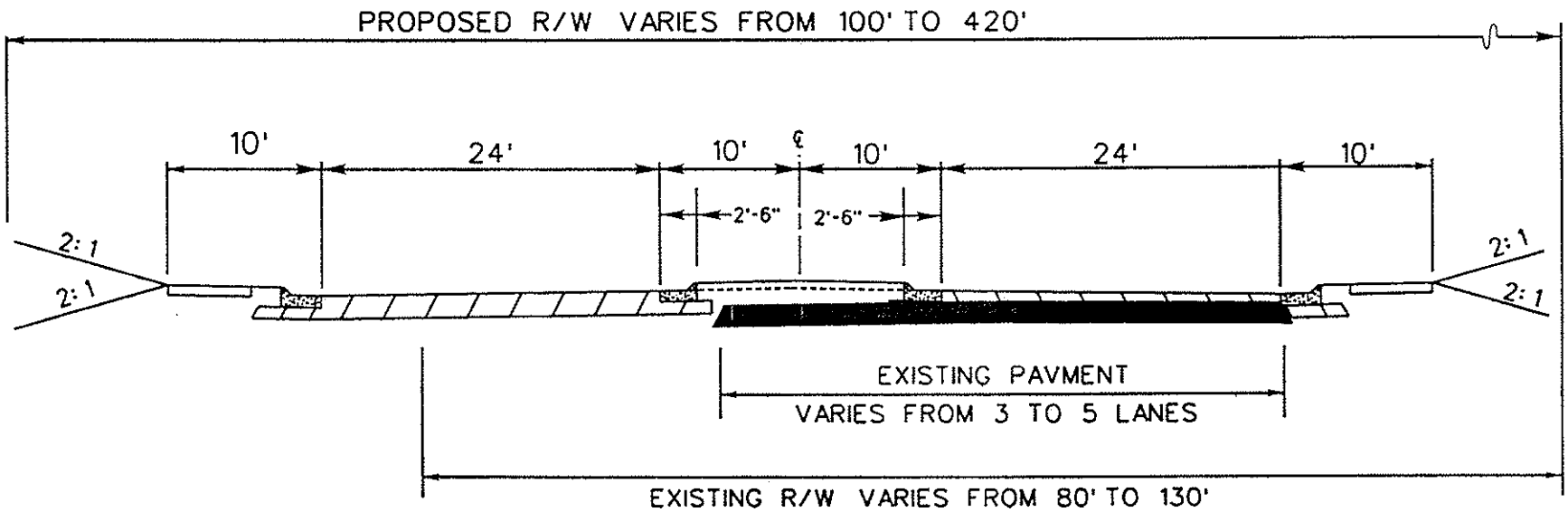

TYPICAL CROSS SECTION

FROM THE SOUTHERN MOUNTAIN CITY LIMITS TO SR 246/HIGHLANDS ROAD

NOT TO SCALE

EDS-441(28) RABUN COUNTY

24' RURAL SECTION
45 MPH SPEED DESIGN

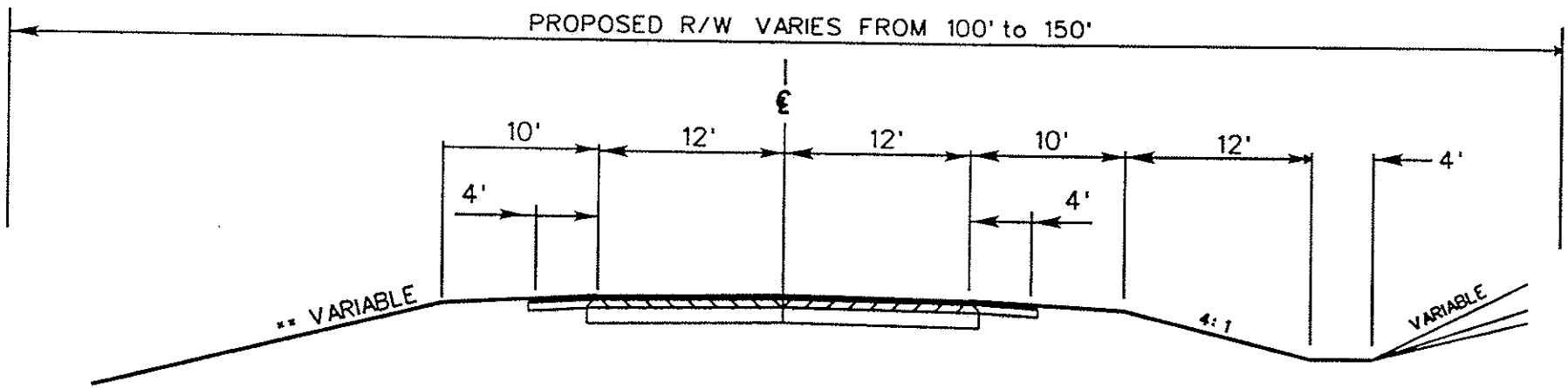

TYPICAL CROSS SECTION

CROSS ROADS AND TIE-INS

NOT TO SCALE

EDS-441(28) RABUN COUNTY

24' URBAN SECTION
45 MPH SPEED DESIGN

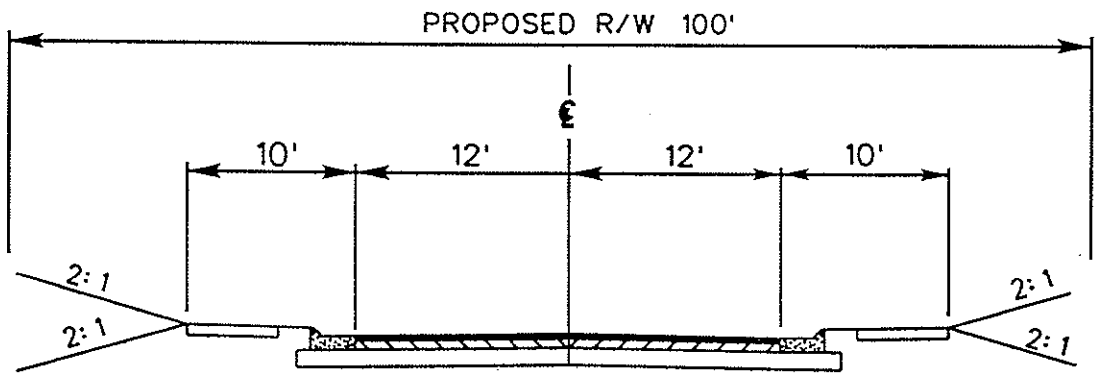

TYPICAL CROSS SECTION

CROSS ROADS AND TIE-INS

NOT TO SCALE