ORIGINAL TO GENERAL FILES

DEPARTMENT OF TRANSPORTATION
STATE OF GEORGIA

INTERDEPARTMENT CORRESPONDENCE

FILE P. I. No. 110630-, Jackson County
NH-IM-85-2(167)
I-85 Widening and Improvements
from North of SR 53 to North of SR 11

OFFICE Preconstruction

DATE March 3, 2008

FROM Genetha Rice-Singleton, Assistant Director of Preconstruction

TO SEE DISTRIBUTION

SUBJECT APPROVED REVISED PROJECT CONCEPT REPORT

Attached for your files is the approval for subject project.

Attachment

DISTRIBUTION:

Brian Summers
Glenn Bowman
Ken Thompson
Michael Henry
Keith Golden
Angela Alexander
Paul Liles
Russell McMurry
Babs Abubakari
BOARD MEMBER

RECEIVED
AUG 21 2007
BY:

DEPARTMENT OF TRANSPORTATION

STATE OF GEORGIA

INTERDEPARTMENT CORRESPONDENCE

FILE NH-IM-85-2(167), Jackson County
I-85 Widening and Improvements
from North of SR53 to North of SR11

OFFICE Consultant Design

DATE July 20, 2007

P.I. Number 110630

FROM Mohammed Abubakari, P.E., State Consultant Design Engineer

TO Genetha Rice-Singleton, Assistant Director of Preconstruction

SUBJECT Revised Project Concept Report

Attached is the original copy of the Revised Concept Report for your further handling for approval in accordance with the Plan Development Process (PDP).

The original concept report includes the area of I-85 from SR 60 to just north of SR 11. This report has been revised to show the changes due to the increase in the total length of the project, from 5 miles to 8 miles (north of SR 53 to just north of SR 11.) The revised cost estimate is attached to the concept report. The typical sections have been modified to shift the profile grade from 14'-0" from either sides of the centerline to 25'-2". The design year has been moved from 2025 to 2029, which has created some changes in the traffic analysis. The bridge width has been changed to match the modified typical sections as mentioned earlier. Also, the lengthening of the ramps associated with Georgia details R-1 and R-2 has increased the width of the Middle Oconee River Bridge, since this bridge is on the ramp taper. The vertical alignment has been revised to meet the current AASHTO minimum requirement for stopping sight distance. The original concept shows asphalt overlay with reconstruction only at the design variances. The proposed pavement section will be a total pavement replacement consisting of concrete only.

The revised concept as presented herein and submitted for approval is consistent with that which is included in the Regional Transportation Program (RTP) and/or the State Transportation Improvement Program (STIP).

DATE 8/27/07

State Transportation Planning Administrator

DISTRIBUTION:

Brian Summers, Project Review Engineer
Harvey Keepler, State Environmental/Location Engineer
Keith Golden, State Traffic Safety and Design Engineer
Angela Alexandra, State Transportation Planning Administrator
Jamie Simpson, State Transportation Financial Management Administrator
Russell McMurry, District One Engineer
Paul Liles, State Bridge Design Engineer

DEPARTMENT OF TRANSPORTATION
STATE OF GEORGIA
OFFICE OF CONSULTANT DESIGN AND PROGRAM DELIVERY

REVISED PROJECT CONCEPT REPORT

I-85 Widening and Improvements from North of SR 53 to North of SR 11
Project Number: NH-IM-85-2 (167)
County: Jackson
P. I. Number: 110630

Federal Route Number: I-85
State Route Number: SR 403

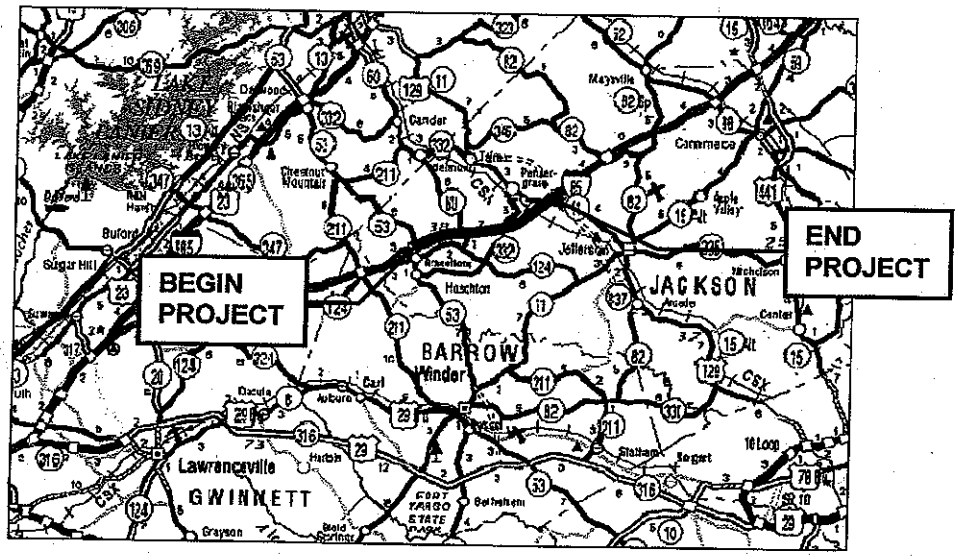

AYRES ASSOCIATES
Engineers/Planners/Scientists

225 Peachtree Street N.E.
Suite 1400
Atlanta, GA 30303

Need and Purpose: The need and purpose statement was revised to reflect the 2030 Annual Average Daily Traffic (AADT), and the latest accident data from north of State Route 53 to north of State Route 11. See attached Need & Purpose Statement.

Project location:
The revised project will consist of a total concrete reconstruction of I-85 from north of SR 53 to north of SR 11 in Jackson County for a total project length of approximately 8.0 miles. The project will widen I-85 from four lanes to six lanes. Three existing bridges will be replaced. The proposed roadway consists of three lanes in each direction separated by a concrete barrier on 7 miles of the project between mile log 129.4-134.0 and 135.1 –137.3, with the remaining one mile having a 112'-0" depressed grass median between mile log 134.0 to 135.1.

Description of the approved concept:
The approved report proposed the widening and reconstruction of I-85 beginning just north of SR 60 and ending just north of US 129/SR 11 for a total project length of 5.0 miles. The existing roadway consisted of two lanes in each direction separated by a 64'-0" depressed grass median on 4 miles of the project, with the remaining one mile having a 176'-0" depressed grass median.

PDP Classification: Minor, Existing Location

Federal Oversight: Full Oversight (X), Exempt ( ), State Funded ( ), or Other ( )

Functional Classification: Rural Interstate Principal Arterial

U.S. Route Number(s): I-85 **State Route Number(s):** SR 403

Traffic (AADT) as shown in the approved concept:
Current Year: (2005) 51,600 Design Year: (2025) 87,700

Proposed design features to be revised:

- Typical section(s):
  - Road way:

    Mile log 132.0-134.1 and 135.1-137.0
    - *Profile grade 14' left and right of the centerline*
    - *12.75' paved inside shoulder*
    - *16' paved outside shoulder*

    Mile log 134.0-135.1
    - *152' depressed median*
    - *Profile grade 88' left and right of the centerline*
    - *10' paved outside shoulder*
  - Structure:
    - 240'x148' widen two parallel two-lane bridges over Walnut Creek on I-85 to six lanes (includes a 28' median on structure)
    - 135'x142' widen two parallel two-lane bridges over Gainesville Midland Railroad on I-85 to six lanes (includes a 28' median on structure)
    - 300'x164' widen two parallel two-lane bridges over Middle Oconee River on I-85 to six lanes (includes a 28' median on structure)

- Project termini:

  From mile log 132.0 to 137.0 (north of SR 60 to north of SR 11) in Jackson County for a total project length of approximately 5.0 miles

- Alignment

  Designed for project length of 5.0 miles with design exception not meeting the current AASHTO guidelines for 70 mph

- Environmental:
  - *No environmental concern anticipated*

- Other criteria:
  - *Design variances: Stopping Sight Distance*
  - *Proposed Maximum degree of curve: 1°00'28"*
  - *Pavement: Asphalt overlay*
  - *Utility involvements: None*

Describe the revised features to be approved:

- Typical section:
  - Roadway

    The approved typical sections will be changed to match the adjacent project to the south. From mile log 129.4 to 134.0 and 135.1-137.3, the profile grade will be changed from 14' left and right of centerline to 25.17'. From mile log 134.0-135.1, *the profile grade will be 79.17' instead of 88'. For the whole project length, the inside paved shoulder will be 12' wide instead of 12.75' and 10'. The outside travel lane will be paved for 13' instead of 12' and striped as a 12' lane. The extra foot is included in the width of the outside paved shoulder. The outside shoulder consists of a 12' paved shoulder and 2' unpaved where as the approved concept showed a 16' paved shoulder (See attachment for details.)*
  - Structure

    As opposed to widening the bridges from the approved concept report, they are proposed to be replaced with details listed below:
    - *340' x 149'-7" Replace two parallel two-lane bridges over Walnut Creek on I-85 with an eight lane bridge separated by a median barrier (includes a 26'-4" median on structure).*
    - *179' x 149'-7" Replace two parallel two-lane bridges over Gainesville Midland Railroad on I-85 with an eight lane bridge separated by a median barrier (includes a 26'-4" median on structure).*
    - *311' x 181'-7" Replace two parallel two-lane bridges over Middle Oconee River on 1-85 with an eight lane bridge separated by a median barrier (includes a 26'-4" median on structure) plus widening for ramps.*

    Bridge Shoulders:
    - *3'-1" special designed median barrier*
    - *11'-7$^1/_2$" inside shoulder*
    - *12' outside shoulder*

    In addition to the revision of the three bridges, a 2000 ft^2 of retaining wall will be constructed on the southbound side between Gainesville Midland Railroad Bridge and Middle Oconee River Bridge

- Project termini: *The southerly project limit has been shifted from SR60 to north SR53 due to logical termini purposes. Thus, the project length will increase from 5 miles to 8 miles.*

- Revised Alignment: *The horizontal and vertical alignment were revised to reflect the new project length and meet the sight distance and the vertical clearance reflecting the current AASHTO guidelines for 70 mph*

- Environmental: *COE 404 permit is required per new finding on this project*

- Other criteria: *The design variance for stopping sight distance will no longer be required as the profile was revised to meet the 2004 AASHTO Design Guidelines. The superelevation was also revised to meet the 2004 AASHTO Design Guidelines. The maximum degree of curve will be 1°00'00". Rather than using asphalt overlay, the pavement will consist of a total concrete replacement. For future utilities, conduit will be provided along the bridges.*

Project coordination:

Project NH-IM-85-2 (166), P.I. No. 110620, from north of SR 211 to north of SR 53, to the south
Project NH-IM-85-2 (168), P.I. No. 110640, from north of SR 11 to north of SR 82, to the north

Updated traffic data (AADT):

Build Year (2010): 58,400 Design Year (2030): 96,500

Programmed/Schedule:

P.E. 1999 R/W: N/A Construction: 2008

V.E Study Required: X Yes ____ No

Revised cost estimates:

1. Construction cost including inflation and E & C: $73,207,315.92
2. Right of way: $0
3. Utilities: $37,716.00

Is the project located in a Non-attainment area? ____ Yes X No

Comments:

- The section of I-85 between Green Street (SR 53) and Lee Street (SR 11) will have a LOS C for the design year 2030. It is the intent of the Department to program future projects to bring the level-of service up to an acceptable level.
- The existing two-lane bridge on SR 332 over I-85 currently has a vertical clearance of 16.04' and the profile grade should be lowered to provide a minimum clearance of 17.00'.
- Due to the encroachment of 2:1 slope into existing ROW for the length of approximately 200', a retaining wall having a maximum height of 10' will be required.

Recommendation: It is recommended that this proposed revision to the concept be approved for implementation.

Attachments:

1. Sketch map,
2. Need and Purpose Statement,
3. Cost Estimates,
4. Typical sections,
5. Accident summaries,
6. Capacity analysis.

Concur: _____
Director of Preconstruction

Approve: _____
For: Division Administrator, FHWA

Approve: _____
Chief Engineer

PROJECT MAP-Project No: NH-IM-85-2(167), Jackson County

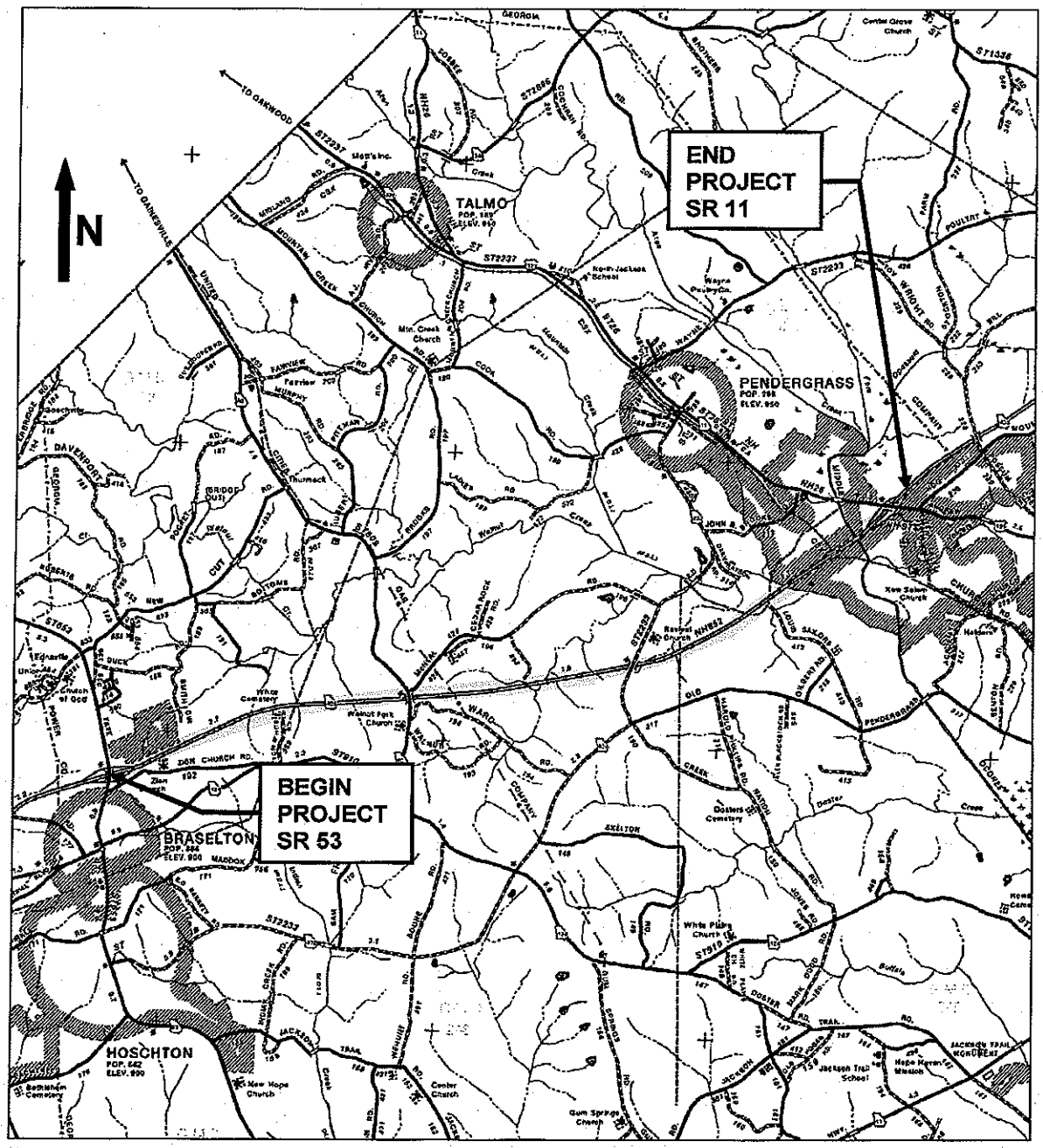

AYRES ASSOCIATES

NEED AND PURPOSE

I-85 Widening and Improvements from North of SR 53 to North of SR 11
Project Number: NH-IM-85-2 (167)
County: Jackson
P. I. Number: 110630

Federal Route Number: I-85
State Route Number: SR 403

BACKGROUND

I-85/SR 403, a rural principal arterial, is a primary corridor in northeastern Georgia. The project is proposed to widen I-85 in Jackson County from SR 53 to north of SR11/ US129 from mile log 129.4 to mile log 137.3 for an approximate length of 7.9 miles. The proposed project would consist of adding one lane on the inside in each direction. The proposed roadway consists of three lanes in each direction separated by a concrete barrier on 7 miles of the project between mile log 129.4- 134.0 and 135.1 –137.3, with the remaining one mile having a 112'-0" depressed grass median between mile log 134.0 to 135.1. Three existing bridges along the corridor will be replaced.
The project is identified in the current State Improvement Plan (STIP) and Long Range Plan (LRP) and is classified as a Fast Track Project. This project has full Federal oversight.

Level of Service

The 2006 Average Annual Daily Traffic (AADT) along I-85 project corridor is 52855 vehicles and traffic is projected to grow to 58,400 by 2010 and to 96,500 by the Design Year 2030. The LOS analyzed for projected years 2010 and 2030 is B and D respectively. If the project corridor is not widened, the LOS for 2030 will be F. The LOS' for 2006, 2010, and 2030 under Build and No Build conditions are shown in the table below.

NH-IM-85-2(167)	ADT	LOS
2006 No Build	52855	C
2006 Build	52855	B
2010 No Build	58400	D
2010 Build	58400	B
Design Year 2030 No Build	96500	F
Design Year 2030 Build	96500	D

Crashes

The statewide average crash rate in 2004 for a rural interstate was 82 crashes per 100,000,000 vehicle miles traveled. Proposed project NH-IM-85-2 (167) is below the statewide average. There were a total of 67 crashes along the project corridor in 2002. Of those 67 crashes, 21 involved injuries and 44 property damage. There were two (2) fatalities in 2002. In 2003 there were a total of 88 crashes which included 27 with injuries and 61 with property damage. There were no fatalities in 2003. In 2004 there were a total of 72 crashes which included 16 with injuries and 56 with property damage. There were no fatalities in 2004 as well.

The most predominant crash types were Rear-End, Angled, and Side-Swipe crashes. Out of the 227 total crashes that occurred, 29% (66) were Rear-End crashes, 18% (41) were Side-Swipe crashes, and 12% (27) were Angled crashes.

Year	Crash Rates (167)/ Statewide Averages	Injury Rates (167)/ Statewide Averages	Fatalities (167)/ Statewide Averages
2002	38/73	12/21	1/1.02
2003	29/74	15/21	0/0.91
2004	23/82	13/25	0/1.39

Logical Termini

At the northern terminus, which is to the north of SR 11/ US 129, I-85 is programmed to be widened to 6 lanes (PI # 110640). At the southern terminus, which is to the south of SR 53 interchange, I-85 is programmed to be widened to 6 lanes (PI# 110620). The locations of the interchanges have played a major role in determining the logical termini for this project. Although the proposed improvements demonstrate independent utility, it is also consistent with the goals of other projects in the area in order to improve the entire transportation network. There are other projects in the vicinity that do not have a direct impact to the project under consideration. These projects are as follows:

- STP-065-3 (55), PI#132860, SR 53 from I-85 to Lanier Raceway/Road Atlanta
- CSSTP-M003-00(553), PI# M003553, Resurface and Maintenance of SR 332 from SR 53 to SR 11/ US129
- CSSTP-0007-00(663), PI#0007663, Widening, Reconstruction/ Rehabilitation of SR 124 from CR 171/ Josh Pirkle Road to SR 11/ US129
- CSSTP-0008-00(434), PI#0008434, Widening of SR 53 FROM I-85 TO CR 167/TAPP WOOD ROAD
- CSSTP-M002-00(856), PI#M002856, Resurfacing and Maintenance of SR 124 FM SR 20/GWINNETT TO SR 53/JACKSON
- CSSTP-M003-00(068), PI# M003068, Resurfacing and Maintenance of SR 11BU FM SR 82 IN JEFFERSON TO SR 11

COMMUNITY ISSUES

The proposed project is in Census Tract 101. Based on 2000 Census information, about 94.13% of the 9920 people that lived in Census Tract 101 were white and 5.87% of the people were minorities whereas in comparison, about 65.1% of the 8,186,453 people that lived in the State of Georgia were white and 34.9% of the people were minorities. Using the 1999 poverty status, 1010(10.23%) persons in Census Tract 101 lived below poverty level and 1,033,793 (13%) lived below poverty level in the State of Georgia.

NEED AND PURPOSE

The proposed improvement is needed to accommodate the traffic volumes on I-85 in order to improve roadway capacity in 2030 because with the existing capacity, the roadway will have unacceptable LOS in 2030. It is also anticipated that the improvements will lower the crashes on I-85 along the project corridor.

The purpose is to provide additional capacity, which will improve LOS and reduce the crashes and injury rates in the proposed project corridor. The construction of a 6-lane section with a raised concrete barrier wall would help meet these objectives.

Project Cost Estimate Report - Page1
P.I. Nuber: 110630
County: Jackson

DETAIL ESTIMATE: COST ESTIMATE REPORT
NH-IM-85-2(167)
Prepared by Ayres Associates Inc.

A. RIGHT OF WAY

Item Number	Quantity	Units	Unit Price	Item Description	Cost
					0.00
				Section Sub Total	**$0.00**

B. REIMBURSABLE UTILITIES

Item Number	Quantity	Units	Unit Price	Item Description	Cost
682-6140	1400	LF	26.94	CONDUIT, RIGID, 4 IN	37716.00
				Section Subtotal	**$37,716.00**

C. CONSTRUCTION

Item Number	Quantity	Units	Unit Price	Item Description	Cost
1. Bridge					
500-0100	12100	SY	4.34	GROOVED CONCRETE	52514.00
500-1006	5700	LS	878.07	SUPERST CONCRETE, CL AA, BR NO-	5004999.00
500-2100	2030	LF	43.91	CONCRETE BARRIER	89137.30
500-3101	1580	CY	509.29	CLASS A CONCRETE	804678.20
501-3000	132100	LF	2.15	STR STEEL, BR NO-	284015.00
511-1000	253700	LB	0.86	BAR REINF STEEL	218182.00
511-3000	966500	LS	0.86	SUPERST REINF STEEL, BR NO-	831190.00
514-1000	299500	LS	0.90	EPOXY COATED SUPERSTR REINF STEEL,N BR NO-	269550.00
518-1000	3	LS	185529.43	RAISE EXISTING BRIDGE, STA-	556588.29
520-1104	360	LF	38.17	PILING IN PLACE, STEL H, HP 10X42	13741.20
520-2214	690	LF	39.52	PILING, PSC, 14 IN SQ	27268.80
520-2216	1830	LF	45.32	PILING, PSC, 16 IN SQ	82935.60
540-1202	3	LS	150538.45	REMOVAL OF PARTS OF EXISTING BRIDGE, BR NO-	451615.35
621-3125	840	LF	264.89	CONCRETE BARRIER, TP 25S, MODIFIED	222507.60
621-3126	180	LF	267.81	CONCRETE BARRIER, TP 26S	48205.80
621-6001	21800	LF	55.59	CONCRETE BARRIER, TP S-1	1211862.00
621-6002	7900	LF	70.48	CONCRETE BARRIER, TP S-2	556792.00
621-6003	4600	LF	177.53	CONCRETE BARRIER, TP S-3	816638.00
649-0018	12500	LF	12.63	CONCRETE GLARE SCREEN, 18 INCH	157875.00
				Section Subtotal	**$11,700,295.14**
2.Earth Work					
205-0001	12100	CY	4.34	UNCLASS EXCAV	52514.00
				Section Subtotal	**$52,514.00**
3. Drainage					
441-0301	2	EA	1777.10	CONC SPILLWAY, TP1	3554.20
441-0303	1	EA	1981.49	CONC SPILLWAY, TP3	1981.49
550-1180	15000	LF	36.25	STORM DRAIN PIPE, 18 IN, H 1-10	543750.00
550-1181	210	LF	34.50	STORM DRAIN PIPE, 18 IN, H 10-15	7245.00
550-4218	57	EA	558.11	FLARE END SECTION, 18 IN, STORM DRAIN	31812.27
611-4001	4	EA	1831.39	RECONSTR MINOR DRAINAGE STR	7325.56
668-2100	124	EA	3570.27	DROP INLET, GP 1	442713.48
668-2110	73	LF	254.76	DROP INLET, GP 1, ADDL DEPTH	18597.48
				Section Subtotal	**$1,056,979.48**
4. Base and Paving					
310-5120	591710	SY	15.34	GR AGGR BASE CRS, 12 INCH, INCL MATL	9076831.40
402-1812	1020	TN	49.96	RECYCLED ASPH CONC LEVELING, INCL BITUM MATL & H LIME	50959.20
402-3112	71020	TN	55.85	RECYCLED ASPH CONC 19 MM SUPERPAVE, GP 1 OR 2, INCL BITUM MATL & H LIME	3966467.00
402-3113	13310	TN	53.32	RECYCLED ASPH CONC 12.5 MM SUPERPAVE, GP 1 OR 2, INCL BITUM MATL & H LIME	709689.20
402-3121	75420	TN	48.31	RECYCLED ASPH CONC 25 MM SUPERPAVE, GP 1 OR 2, INCL BITUM MATL & H LIME	3643540.20
402-4012	161330	SY	10.25	2 IN RECYCLED ASPH CONC 19 MM SUPERPAVE, GP 1 OR 2, INCL BITUM MATL & H LIME	1653632.50
413-1000	52500	GL	1.32	BITUM TACK COAT	69300.00
				Section Subtotal	**$19,170,419.50**
5. Concrete					
430-1220	430380	SY	59.66	CONT REINF CONC PVMT, CL HES CONC, 12 INCH THK	25676470.80
433-1300	3300	SY	139.24	REINF CONC APPROACH SLAB, INCL BARRIER	459492.00
456-2020	32	GLM	440.00	INDENTATION EDGE LINE RUMBLE STRIPS-GROUND IN PLACE (CONT.)	14080.00
				Section Subtotal	**$26,150,042.80**

Project Cost Estimate Report - Page2
P.I. Nuber: 110630
County: Jackson

Item Number	Quantity	Units	Unit Price	Item Description	Cost
6. Traffic Control					
150-1000	1	LS	174978.65	TRAFFIC CONTROL	174978.65
				Section Subtotal	**$174,978.65**
7. Clearing and Grubbing					
201-1500	1	LS	2724912.85	CLEARING AND GRUBBING	2724912.85
				Section Subtotal	**$2,724,912.85**
8. Erosion Control					
163-0232	210	AC	523.01	TEMPORARY GRASSING	109832.10
163-0240	120	TN	204.26	MULCH	24511.20
163-0300	6	EA	1818.63	CONSTRUCTION EXIT	10911.78
163-0501	10	EA	903.19	CONSTRUCT AND REMOVE SILT CONTROL GATE, TP1	9031.90
163-0502	15	EA	425.76	CONSTRUCT AND REMOVE SILT CONTROL GATE, TP2	6386.40
163-0520	11600	LF	14.29	CONSTRUCT AND REMOVE TEMPORARY PIPE SLOPE DRAIN	165764.00
163-0521	252	EA	165.43	CONSTRUCT AND REMOVE TEMPORARY DITCH CHECKS	41688.36
163-0531	14	EA	8004.56	CONSTRUCT AND REMOVE SEDIMENT BASIN, TP1, STA NO-	112063.84
163-0550	124	EA	267.59	CONSTRUCT AND REMOVE INLET SEDIMENT TRAP	33181.16
165-0010	29700	LF	1.00	MAINTENANCE OF TEMPORARY SILT FENCE, TP A	29700.00
165-0020	34700	LF	1.18	MAINTENANCE OF TEMPORARY SILT FENCE, TP B	40946.00
165-0030	4800	LF	1.32	MAINTENANCE OF TEMPORARY SILT FENCE, TP C	6336.00
165-0040	252	EA	71.29	MAINTENANCE OF EROSION CONTROL CHECKDAMS/DITCH CHECKS	17965.08
165-0060	14	EA	1053.32	MAINTENANCE OF TEMPORARY SEDIMENT BASIN, STA NO -	14746.48
165-0085	10	EA	332.63	MAINTENANCE OF SILT CONTROL GATE, TP 1	3326.30
165-0086	15	EA	167.73	MAINTENANCE OF SILT CONTROL GATE, TP 2	2515.95
165-0101	6	EA	486.83	MAINTENANCE OF CONSTRUCTION EXIT	2920.98
165-0105	124	EA	95.48	MAINTENANCE OF INLET SEDIMENT TRAP	11839.52
167-1000	2	EA	1334.19	WATER QUALITY MONITORING & SAMPLING	2668.38
167-1500	24	MO	982.74	WATER QUALITY INSPECTION	23585.76
171-0010	29700	LF	1.81	TEMPORARY SILT FENCE, TYPE A	53757.00
170-0020	34700	LF	1.76	TEMPORARY SILT FENCE, TYPE B	61072.00
171-0030	4800	LF	3.32	TEMPORARY SILT FENCE, TYPE C	15936.00
603-2018	2640	SY	42.16	STN DUMPED RIP RAP, TP 1, 18 IN	111302.40
700-6910	84	AC	834.69	PERMANENT GRASSING	70113.96
700-7000	6	TN	59.53	AGRICULTURAL LIME	357.18
700-8000	50	TN	293.86	FERTILIZER MIXED GRADE	14693.00
700-8100	4300	LB	1.71	FERTILIZER NITROGEN CONTENT	7353.00
716-2000	52400	SY	1.12	EROSION CONTROL MATS, SLOPES	58688.00
				Section Subtotal	**$1,063,193.73**
9. Signing and Striping					
611-5360	6	EA	227.25	RESET HIGHWAY SIGN	1363.50
636-1020	10	SF	14.49	HIGHWAY SIGNS, TP 1 MATL, REFL SHEETING, TP3	144.90
636-1029	540	SF	17.89	HIGHWAY SIGNS, TP 2 MATL, REFL SHEETING, TP3	9660.60
636-1072	2700	SF	19.19	HIGHWAY SIGNS, ALUM EXTRUDED PANELS, REFL SHEETING, TP3	51813.00
636-2070	550	LF	7.54	GALV STEEL POST, TP 7	4147.00
636-2080	240	LF	9.48	GALV STEEL POST, TP 8	2275.20
636-2090	70	LF	7.05	GALV STEEL POST, TP 9	493.50
636-3000	6800	LB	3.27	GALV STEEL STR SHAPE POST	22236.00
636-5010	200	EA	40.57	DELINEATOR, TP 1	8114.00
636-5020	86	EA	53.27	DELINEATOR, TP 2	4581.22
636-5100	16	EA	110.64	MILEPOST SIGNS	1770.24
638-1001	3	LS	76249.89	STR SUPPORT FOR OVERHEAD SIGN, TP I, STA-	228749.67
638-1003	4	LS	38074.01	STR SUPPORT FOR OVERHEAD SIGN, TP III, STA-	152296.04
652-2501	17	LM	300.33	SOLID TRAFFIC STRIPE, 5 IN, WHITE	5105.61
652-2502	17	LM	302.50	SOLID TRAFFIC STRIPE, 5 IN, YELLOW	5142.50
652-3501	33	GLM	238.99	SKIP TRAFFIC STRIPE, 5 IN, WHITE	7886.67
652-5801	3800	LF	0.89	SOLID TRAFFIC STRIPE, 8 IN, WHITE	3382.00
652-6501	3600	GLF	0.18	SKIP TRAFFIC STRIPE, 5 IN, WHITE	648.00
652-8255	7900	LF	2.12	SOLID POLYUREA TRAFFIC STRIPE, 10 IN, WHITE	16748.00
652-9001	9700	SY	1.91	TRAFFIC STRIPE, WHITE	18527.00
652-9002	9900	SY	1.83	TRAFFIC STRIPE, YELLOW	18117.00
				Section Subtotal	**$563,201.65**

Project Cost Estimate Report - Page3
P.I. Nuber: 110630
County: Jackson

Item Number	Quantity	Units	Unit Price	Item Description	Cost
10. Guardrail					
641-1100	260	LF	36.01	GUARDRAIL, TP T	9362.60
641-1200	29900	LF	15.99	GUARDRAIL, TP W	478101.00
641-5001	43	EA	548.21	GUARDRAIL ANCHORAGE, TP 1	23573.03
641-5012	43	EA	1712.51	GUARDRAIL ANCHORAGE, TP 12	73637.93
				Section Subtotal	**$584,674.56**
11. Concrete Barrier					
620-0100	80300	LF	39.97	TEMPORARY BARRIER, METHOD NO. 1	3209591.00
				Section Subtotal	**$3,209,591.00**
12. Removal Items					
610-1055	25000	LF	1.55	REM GUARDRAIL	38750.00
610-1075	148	EA	245.63	REM GUARDRAIL ANCH, ALL TYPES	36353.24
610-6015	44	EA	227.86	REM DROP INLET	10025.84
610-6510	7	EA	329.12	REM HWY SIGN, OVHD	2303.84
610-6515	47	EA	65.84	REM HIGHWAY SIGN, STD	3094.48
610-6520	18	EA	598.59	REM HIGWAY SIGN, SPCL ROADSIDE	10774.62
				Section Subtotal	**$101,302.02**

PRELIMINARY COST ESTIMATE SUMMARY

A. RIGHT OF WAY	**$0.00**
B. REIMBURSABLE UTILITIES	**$37,716.00**
C. CONSTRUCTION	**$66,552,105.38**
1. BRIDGE	11700295.14
2. EARTHWORK	52514.00
3. DRAINAGE	1056979.48
4. BASE & PAVING	19170419.50
5. CONCRETE	26150042.80
6. TRAFFIC CONTROL	174978.65
7. CLEARING AND GRUBBING	2724912.85
8. EROSION CONTROL	1063193.73
9. SIGNING AND STRIPING	563201.65
10. GUARDRAIL	584674.56
11. CONCRETE BARRIER	3209591.00
12.REMOVAL ITEMS	101302.02

CONSTRUCTION COST	**$66,552,105.38**
E&C RATE 10.0%	$6,655,210.54
TOTAL CONSTRUCTION	$73,207,315.92
UTILITIES	$37,716.00
GRAND TOTAL PROJECT COST	**$73,245,031.92**

COUNTY	PROJECT NUMBER	SHEET NO.	TOTAL SHEETS
JACKSON	NH-1M-85-2(167)		

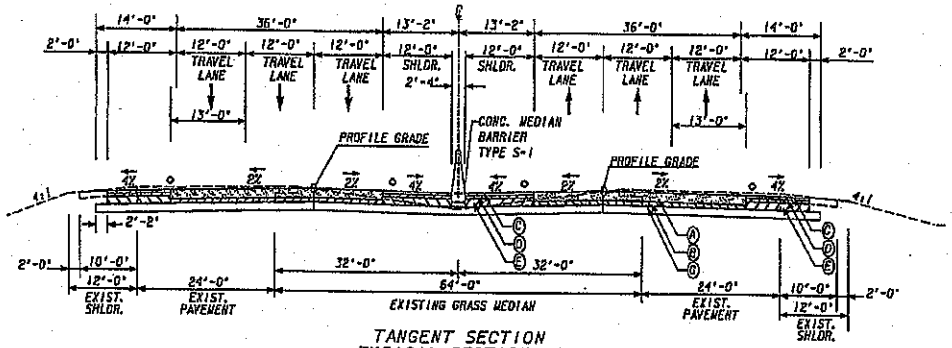

TANGENT SECTION
TYPICAL SECTION #1

STA. 525+64.29 TO STA. 570+94.00
STA. 598+80.18 TO STA. 669+32.81
STA. 698+02.22 TO STA. 750+83.49
STA. 812+33.93 TO STA. 825+00.00
STA. 833+80.00 TO STA. 847+76.00
STA. 883+80.35 TO STA. 900+05.18
STA. 922+85.79 TO STA. 927+00.00

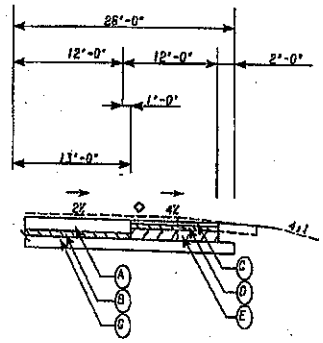

OUTSIDE SHOULDER DETAIL

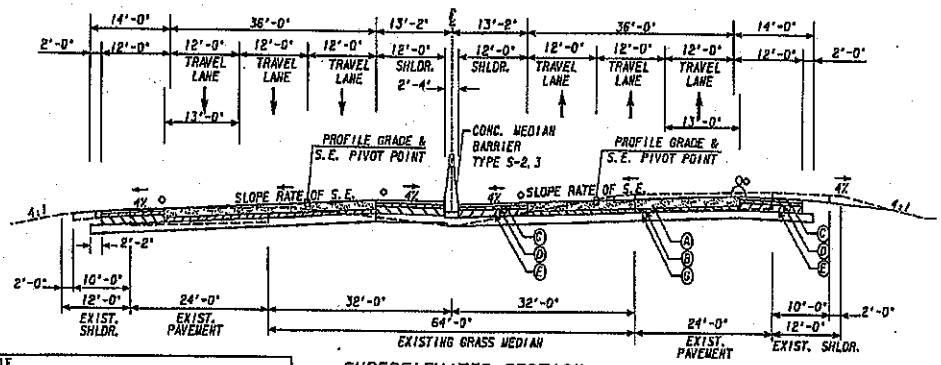

SUPERELEVATED SECTION
TYPICAL SECTION #2

STA. 508+00.00 TO STA. 525+64.29
STA. 570+94.00 TO STA. 598+80.18
STA. 669+32.81 TO STA. 698+02.22
STA. 750+83.49 TO STA. 752+99.27
STA. 900+05.18 TO STA. 922+85.79

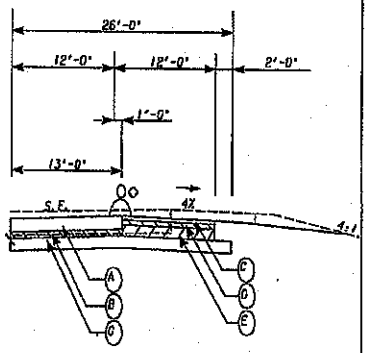

OUTSIDE SHOULDER DETAIL

◇ GROUND IN RUMBLE STRIPS

PAVEMENT MATERIAL SCHEDULE
(A) CR CONC. PAVEMENT, CL HES CONC., 12 INCH
(B) RECYCLED ASPH CONC 19 MM, GP 1 OR 2, SUPERPAVE MIX DESIGN LEVEL C, INCL BITUM MATL & H LIME, 330 LBS./SY-3 INCH
(C) RECYCLED ASPH CONC 12.5 MM, GP 2 ONLY, SUPERPAVE MIX DESIGN LEVEL C, INCL BITUM MATL & H LIME, 165 LBS./SY-1.5 INCH
(D) RECYCLED ASPH CONC 19 MM, GP 1 OR 2, SUPERPAVE MIX DESIGN LEVEL C, INCL BITUM MATL & H LIME, 220 LBS./SY-2 INCH
(E) RECYCLED ASPH CONC 25 MM, GP 1 OR 2, SUPERPAVE MIX DESIGN LEVEL C, INCL BITUM MATL & H LIME, 935 LBS./SY-8.5 INCH
(F) RECYCLED ASPH CONC LEVELING, INCL BITUM MATL AS DIRECTED BY THE ENGINEER
(G) GRADED AGGREGATE BASE, 12 INCH, INCL MATL

AYRES ASSOCIATES
225 PEACHTREE STREET, NE,
SOUTH TOWER - SUITE 1400,
ATLANTA, GA 30303

SCALE IN FEET
0 10 20 40

REVISION DATES

STATE OF GEORGIA
DEPARTMENT OF TRANSPORTATION
OFFICE: CONSULTANT DESIGN
TYPICAL SECTIONS

I-85

DRAWING NO. 5-01

...\ROADWAY\DGN\110030\t01.dgn 7/6/2007 1:44:08 PM

COUNTY	PROJECT NUMBER	SHEET NO.	TOTAL SHEETS
JACKSON	NH-IM-85-2(167)		

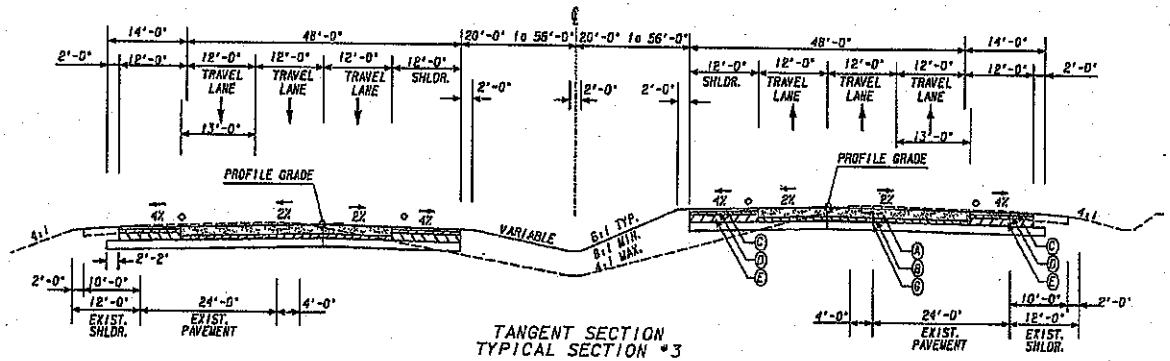

TANGENT SECTION
TYPICAL SECTION #3

STA. 777+26.06 TO STA. 792+67.92
STA. 809+65.65 TO STA. 812+33.93.

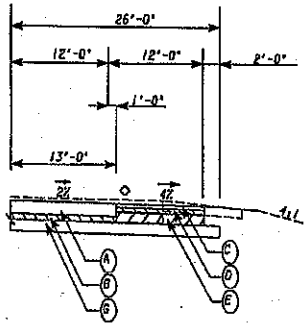

OUTSIDE SHOULDER DETAIL

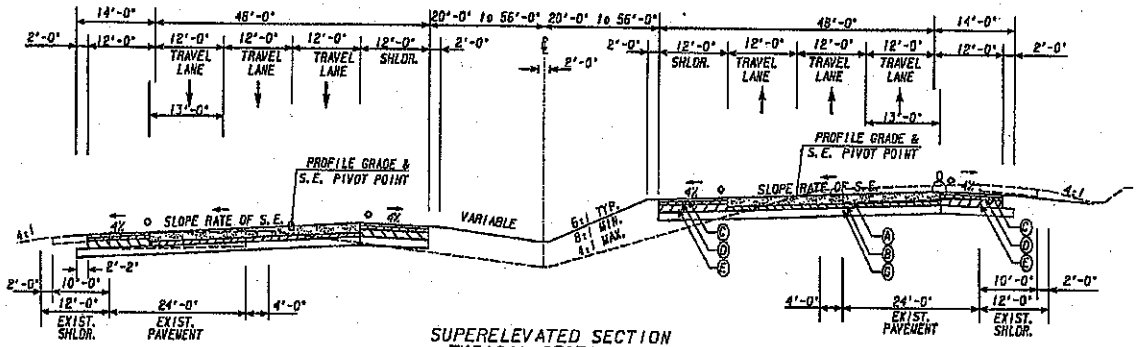

SUPERELEVATED SECTION
TYPICAL SECTION #4

STA. 752+99.27 TO STA. 777+26.06
STA. 792+67.92 TO STA. 809+65.65

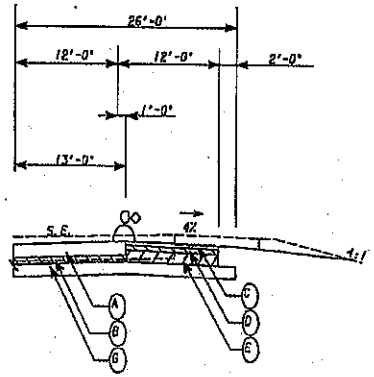

OUTSIDE SHOULDER DETAIL

◇ GROUND IN RUMBLE STRIPS

PAVEMENT MATERIAL SCHEDULE
(A) CR CONC. PAVEMENT, CL HES CONC., 12 INCH
(B) RECYCLED ASPH CONC 19 MM, GP 1 OR 2, SUPERPAVE MIX DESIGN LEVEL C, INCL BITUM MATL & H LIME, 330 LBS./SY-3 INCH
(C) RECYCLED ASPH CONC 12.5 MM, GP 2 ONLY, SUPERPAVE MIX DESIGN LEVEL C, INCL BITUM MATL & H LIME, 165 LBS./SY-1.5 INCH
(D) RECYCLED ASPH CONC 19 MM, GP 1 OR 2, SUPERPAVE MIX DESIGN LEVEL C, INCL BITUM MATL & H LIME, 220 LBS./SY-2 INCH
(E) RECYCLED ASPH CONC 25 MM, GP 1 OR 2, SUPERPAVE MIX DESIGN LEVEL C, INCL BITUM MATL & H LIME, 935 LBS./SY-8.5 INCH
(F) RECYCLED ASPH CONC LEVELING, INCL BITUM MATL AS DIRECTED BY THE ENGINEER
(G) GRADED AGGREGATE BASE, 12 INCH, INCL MATL

AYRES ASSOCIATES
225 PEACHTREE STREET, NE,
SOUTH TOWER - SUITE 1400,
ATLANTA, GA 30303

SCALE IN FEET
0 10 20 40

REVISION DATES

STATE OF GEORGIA
DEPARTMENT OF TRANSPORTATION
OFFICE: CONSULTANT DESIGN
TYPICAL SECTIONS

I-85

DRAWING No. 5-02

\\ROADWAY\DGN\110630w02.dgn 7/6/2007 1:44:10 PM

DATE/TIME	TIME	PRF	DGN	COUNTY	PROJECT NUMBER	SHEET NO.	TOTAL SHEETS
USER		PENTABLE		JACKSON	NH-1M-85-21(67)		

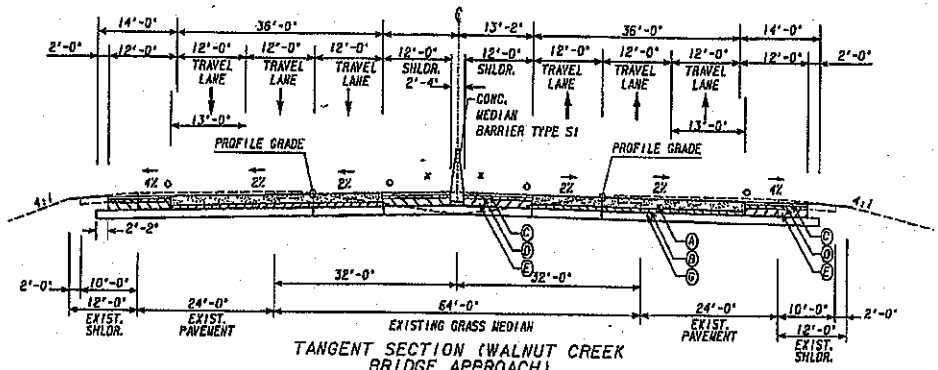

TANGENT SECTION (WALNUT CREEK BRIDGE APPROACH)
TYPICAL SECTION #5

STA. 825+00.00 TO STA. 827+61.99
STA. 831+01.99 TO STA. 833+80.00

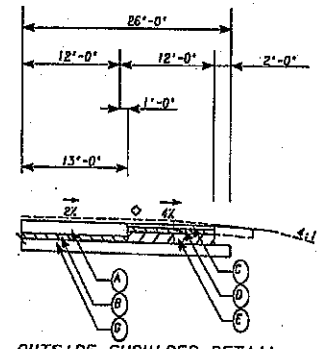

OUTSIDE SHOULDER DETAIL

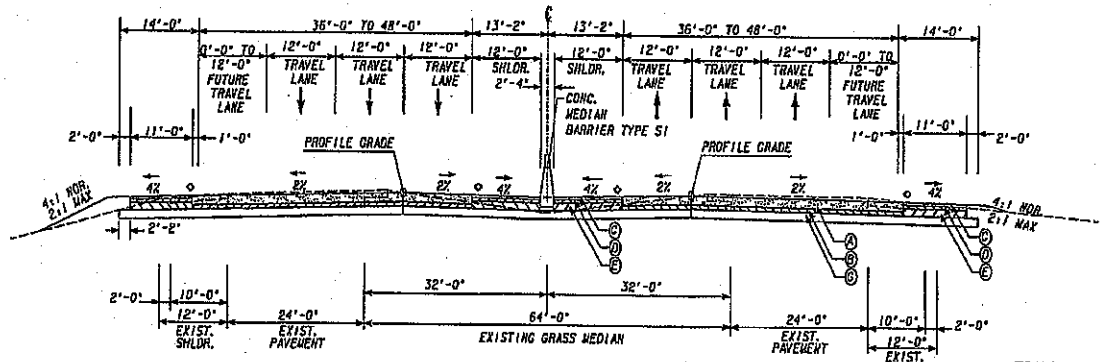

TANGENT SECTION
TYPICAL SECTION #6

STA. 847+76.00 TO STA. 853+20.00
STA. 861+80.00 TO STA. 862+50.96

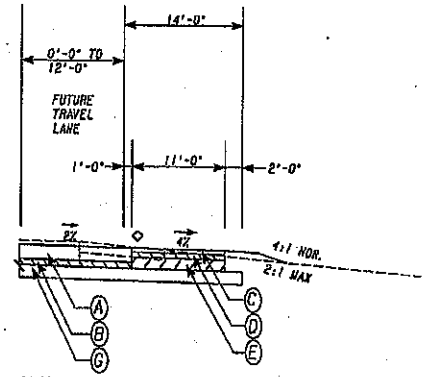

OUTSIDE SHOULDER DETAIL

* TRANSITION MEDIAN SLOPE TO NORMAL CROWN

◇ GROUND IN RUMBLE STRIPS

PAVEMENT MATERIAL SCHEDULE
(A) CR CONC. PAVEMENT, CL HES CONC., 12 INCH
(B) RECYCLED ASPH CONC 19 MM, GP 1 OR 2, SUPERPAVE MIX DESIGN LEVEL C, INCL BITUM MATL & H LIME, 330 LBS./SY-3 INCH
(C) RECYCLED ASPH CONC 12.5 MM, GP 2 ONLY, SUPERPAVE MIX DESIGN LEVEL C, INCL BITUM MATL & H LIME, 165 LBS./SY-1.5 INCH
(D) RECYCLED ASPH CONC 19 MM, GP 1 OR 2, SUPERPAVE MIX DESIGN LEVEL C, INCL BITUM MATL & H LIME, 220 LBS./SY-2 INCH
(E) RECYCLED ASPH CONC 25 MM, GP 1 OR 2, SUPERPAVE MIX DESIGN LEVEL C, INCL BITUM MATL & H LIME, 935 LBS./SY-8.5 INCH
(F) RECYCLED ASPH CONC LEVELING, INCL BITUM MATL AS DIRECTED BY THE ENGINEER
(G) GRADED AGGREGATE BASE, 12 INCH, INCL MATL

AYRES ASSOCIATES
225 PEACHTREE STREET, NE.
SOUTH TOWER - SUITE 1400,
ATLANTA, GA 30303

SCALE IN FEET
0 10 20 40

REVISION DATES

STATE OF GEORGIA
DEPARTMENT OF TRANSPORTATION
OFFICE: CONSULTANT DESIGN
TYPICAL SECTIONS

I-85

DRAWING No. 5-03

...\ROADWAY\DGN\110530h03.dgn 7/6/2007 1:44:12 PM

COUNTY	PROJECT NUMBER	SHEET NO.	TOTAL SHEETS
JACKSON	NH-(M-85-21167)		

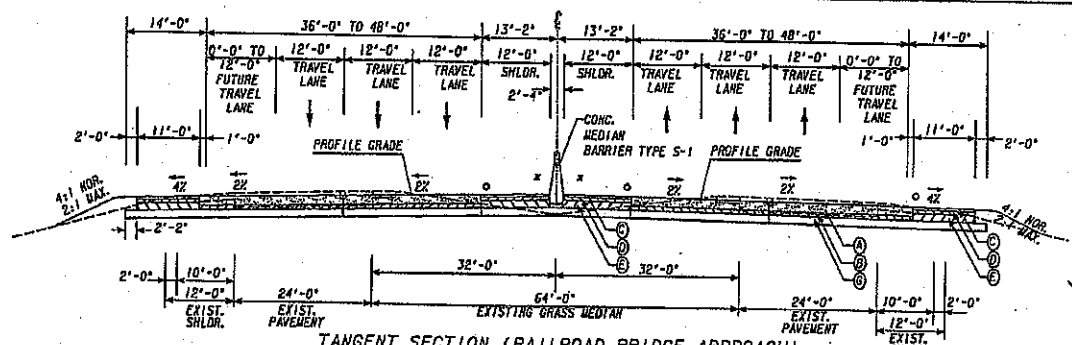

TANGENT SECTION (RAILROAD BRIDGE APPROACH)
TYPICAL SECTION #7

STA. 853+20.00 TO STA. 856+69.03
STA. 858+48.03 TO STA. 861+80.00

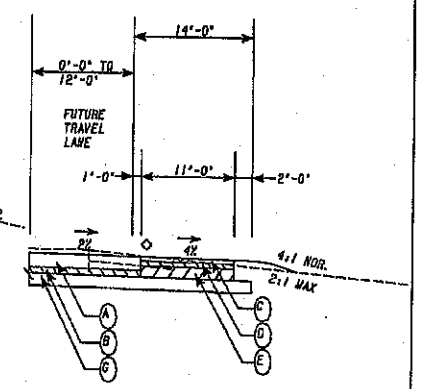

OUTSIDE SHOULDER

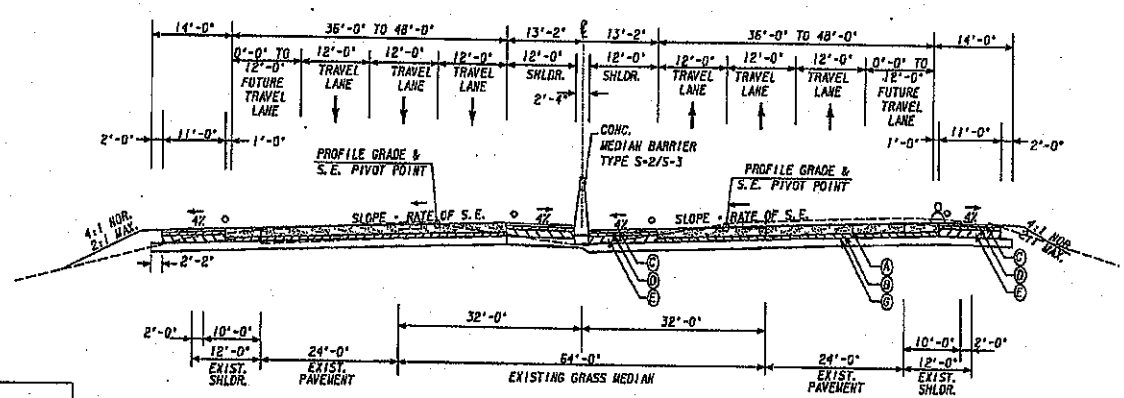

SUPERELEVATED SECTION
(MIDDLE OCONEE RIVER BRIDGE APPROACH)
TYPICAL SECTION #8

STA. 862+50.96 TO STA. 866+91.81
STA. 870+02.81 TO STA. 883+80.35

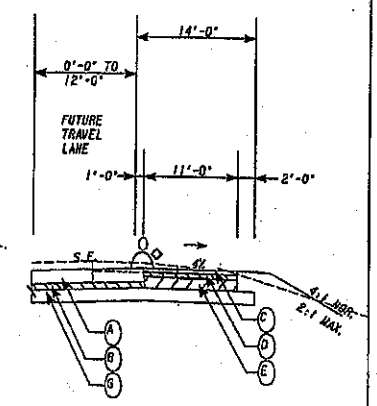

OUTSIDE SHOULDER

× TRANSITION MEDIAN SLOPE TO NORMAL CROWN

○ GROUND IN RUMBLE STRIPS

PAVEMENT MATERIAL SCHEDULE
(A) CR CONC. PAVEMENT, CL HES CONC., 12 INCH
(B) RECYCLED ASPH CONC 19 MM, GP 1 OR 2, SUPERPAVE MIX DESIGN LEVEL C, INCL BITUM MATL & H LIME, 330 LBS./SY-3 INCH
(C) RECYCLED ASPH CONC 12.5 MM, GP 2 ONLY, SUPERPAVE MIX DESIGN LEVEL C, INCL BITUM MATL & H LIME, 165 LBS./SY-1.5 INCH
(D) RECYCLED ASPH CONC 19 MM, GP 1 OR 2, SUPERPAVE MIX DESIGN LEVEL C, INCL BITUM MATL & H LIME, 220 LBS./SY-2 INCH
(E) RECYCLED ASPH CONC 25 MM, GP 1 OR 2, SUPERPAVE MIX DESIGN LEVEL C, INCL BITUM MATL & H LIME, 935 LBS./SY-8.5 INCH
(F) RECYCLED ASPH CONC LEVELING, INCL BITUM MATL AS DIRECTED BY THE ENGINEER
(G) GRADED AGGREGATE BASE, 12 INCH, INCL MATL

AYRES ASSOCIATES
225 PEACHTREE STREET, NE.
SOUTH TOWER - SUITE 1400,
ATLANTA, GA 30303

SCALE IN FEET
0 10 20 40

REVISION DATES

STATE OF GEORGIA
DEPARTMENT OF TRANSPORTATION
OFFICE: CONSULTANT DESIGN
TYPICAL SECTIONS

1-85

DRAWING No. 5-04

...\ROADWAY\DGN\110630h04.dgn 7/9/2007 1:44:14 PM

GEORGIA DEPARTMENT OF TRANSPORTATION
OFFICE OF ENVIRONMENT/LOCATION

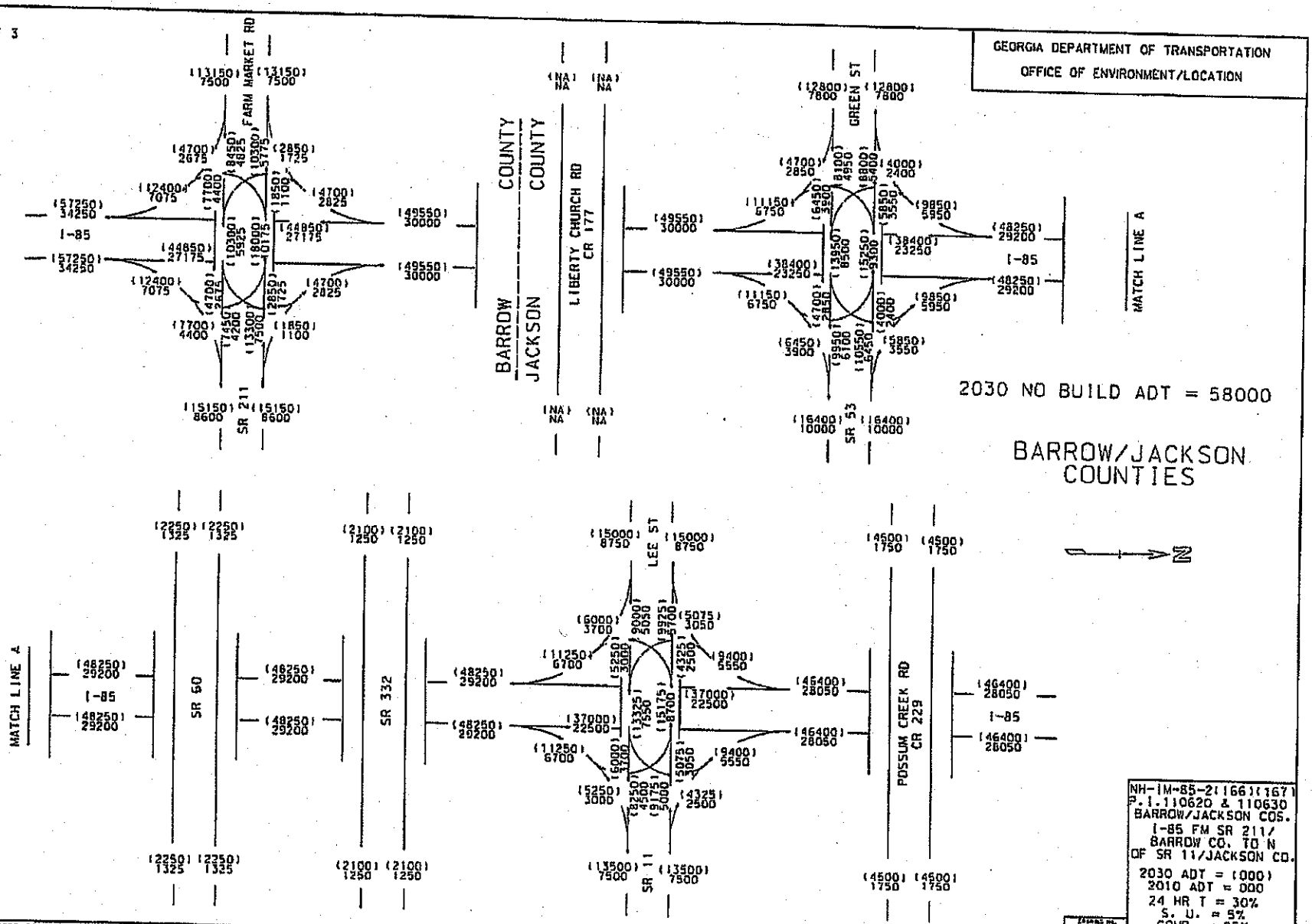

NH-IM-85-2(166)(167)
P.I. 110620 & 110630
BARROW/JACKSON COS.
I-85 FM SR 211/
BARROW CO. TO N
OF SR 11/JACKSON CO.
2030 ADT = (000)
2010 ADT = 000
24 HR T = 30%
S. U. = 5%
COMB. = 25%
RGL
02/06

10-01

...\ROADWAY\DGN\110630u01.dgn 6/11/2007 2:53:47 PM

GEORGIA DEPARTMENT OF TRANSPORTATION
OFFICE OF ENVIRONMENT/LOCATION

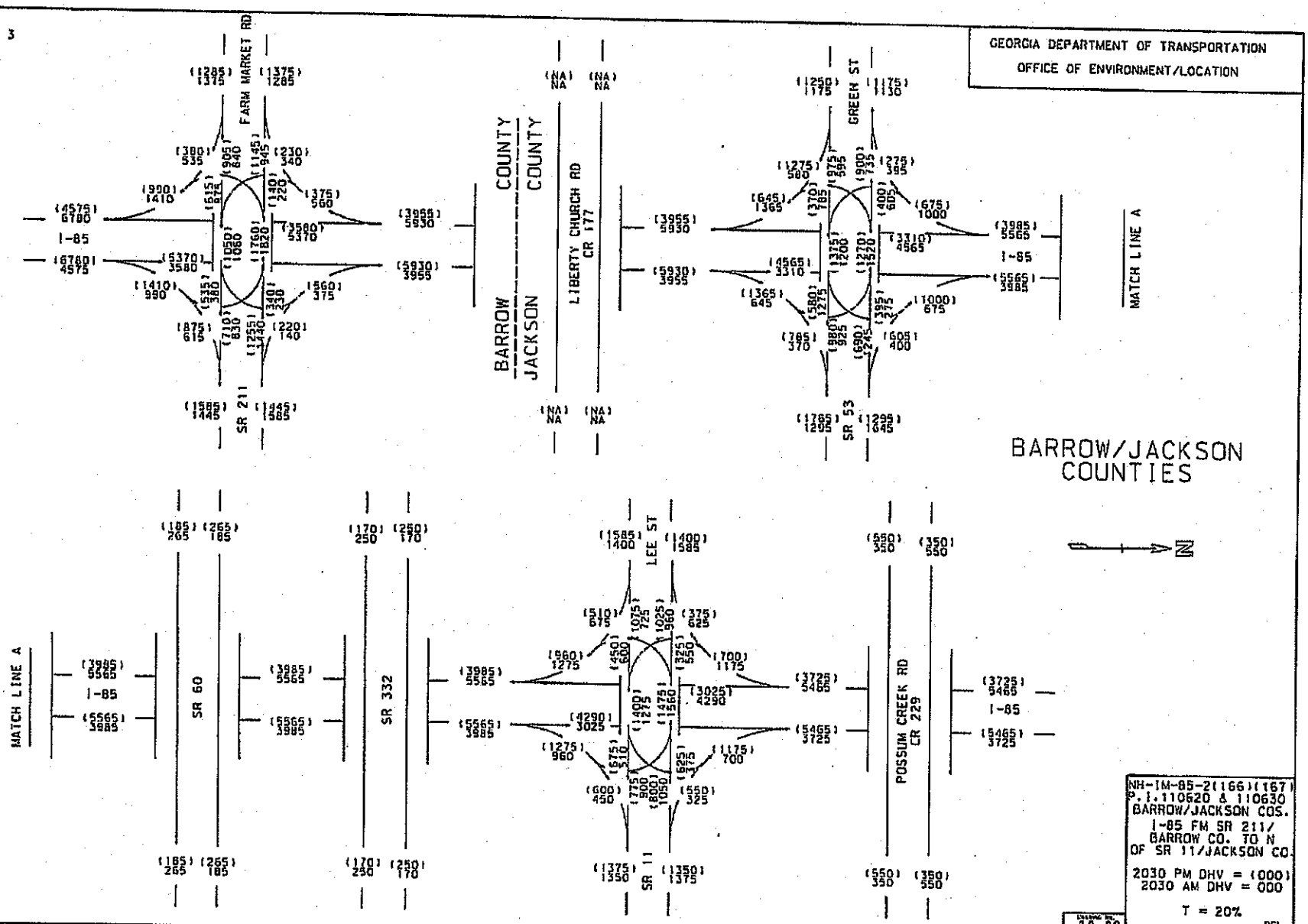

NH-IM-85-2(166)(167)
P.I. 110620 & 110630
BARROW/JACKSON COS.
I-85 FM SR 211/
BARROW CO. TO N
OF SR 11/JACKSON CO.

2030 PM DHV = (000)
2030 AM DHV = 000

T = 20%

DRAWING NO. 10-02

RGL
02/06

...\ROADWAY\DGN\110630b02.dgn 6/11/2007 2:53:49 PM

GEORGIA DEPARTMENT OF TRANSPORTATION
OFFICE OF ENVIRONMENT/LOCATION

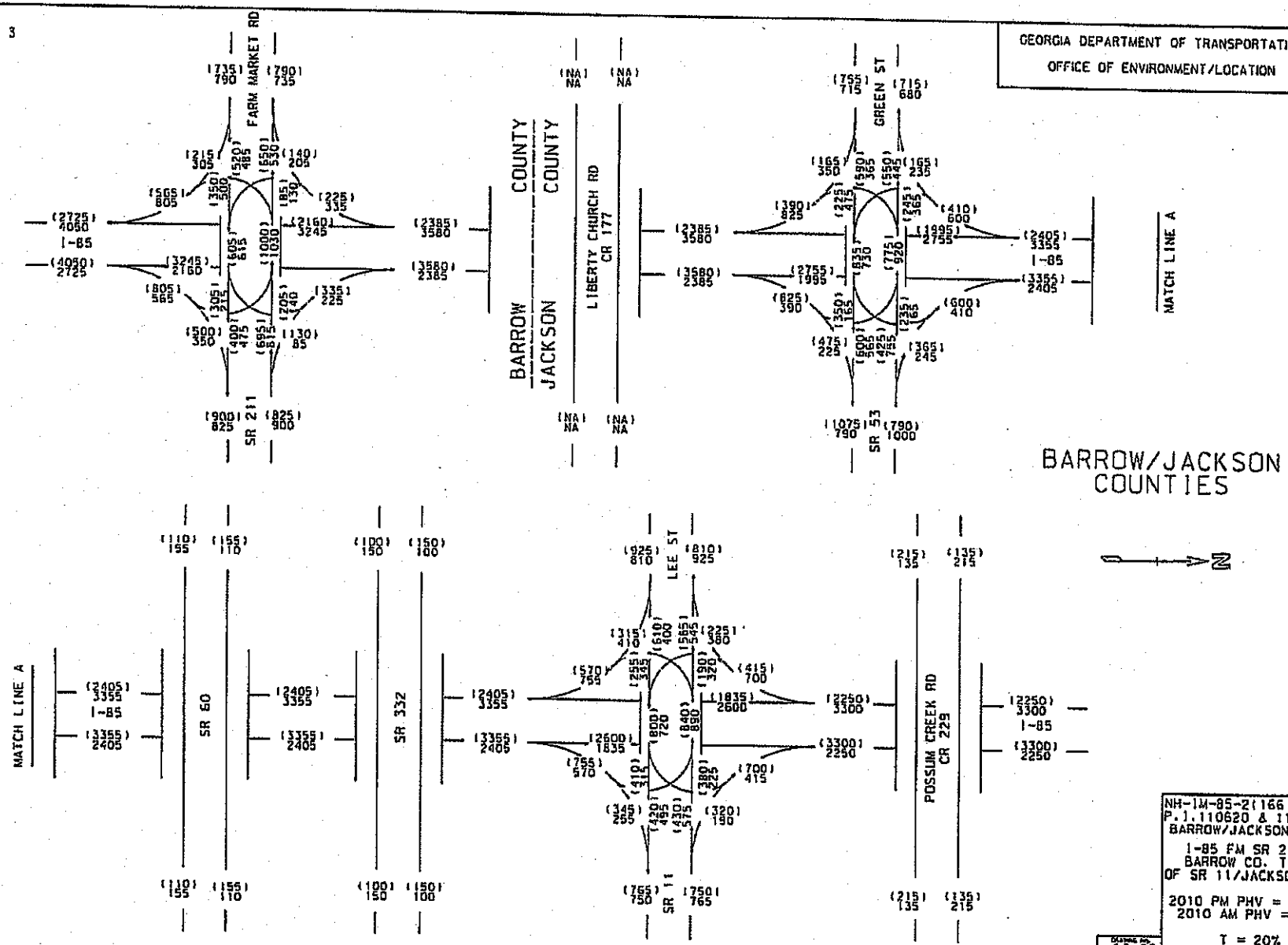

NH-IM-85-2(166)(167)
P.I. 110620 & 110630
BARROW/JACKSON COS.

I-85 FM SR 211/
BARROW CO. TO N
OF SR 11/JACKSON CO.

2010 PM PHV = (000)
2010 AM PHV = 000

T = 20%

RGL
02/06

DRAWING NO.
10-03

...\ROADWAY\DGN\110630\03.dgn 8/11/2007 2:53:51 PM

HCS2000: Basic Freeway Segments Release 4.1d

Phone:
E-mail:

Fax:

Design Analysis

Analyst:	David Hansen, P.E, PTOE
Agency or Company:	Ayres Associates Inc
Date Performed:	8/29/2005
Analysis Time Period:	AM Peak Hour
Freeway/Direction:	I-85 SB
From/To:	SR53 (Green) to SR11 (Lee)
Jurisdiction:	Jackson County
Analysis Year:	2029
Description:	NH-IM-85-2(167)

Flow Inputs and Adjustments

Volume, V	5565	veh/h
Peak-hour factor, PHF	0.95	
Peak 15-min volume, v15	1464	v
Trucks and buses	25	%
Recreational vehicles	0	%
Terrain Type	Grade	
Grade	-3.00	%
Segment length	7.20	mi
Trucks and buses PCE, ET	1.5	
Recreational vehicles PCE, ER	1.2	
Heavy vehicles adjustment, fHV	0.889	
Driver population factor, fp	1.00	
Flow rate, vp	6590	pc/h
Desired level of service	D	

Speed Inputs and Adjustments

Lane width, LW	12.0	ft
Right-shoulder lateral clearance, LC	6.0	ft
Interchange density, ID	0.20	interchange/mi
Free-flow speed:	Base	
FFS or BFFS	70.0	mi/h
Lane width adjustment, fLW	0.0	mi/h
Lateral clearance adjustment, fLC	0.0	mi/h
Interchange density adjustment, fID	0.0	mi/h
Number of lanes adjustment, fN	1.5	mi/h
Free-flow speed	68.5	mi/h
	Urban Freeway	

LOS and Performance Measures

Desired level of service	D	
Design flow rate, vp	6590	pc/h
Design free-flow speed, FFS	68.5	mi/h
Number of lanes required, N	4	
Average passenger-car speed, S	67.9	mi/h

Density, D	24.3	c/mi/ln
Level of service	C	

Fewer number of lanes required will not produce the desired LOS.
Overall results are not computed when free-flow speed is less than 55 mph.

HCS2000: Basic Freeway Segments Release 4.1d

Phone: Fax:
E-mail:

Design Analysis

Analyst:	David Hansen, P.E., PTOE
Agency or Company:	Ayres Associates Inc
Date Performed:	8/29/2005
Analysis Time Period:	PM Peak Hour
Freeway/Direction:	I-85 NB
From/To:	SR53 (Green) to SR11 (Lee)
Jurisdiction:	Jackson County
Analysis Year:	2029
Description:	NH-IM-85-2(167)

Flow Inputs and Adjustments

Volume, V	5565	veh/h
Peak-hour factor, PHF	0.95	
Peak 15-min volume, v15	1464	v
Trucks and buses	25	%
Recreational vehicles	0	%
Terrain Type	Grade	
Grade	3.00	%
Segment length	7.20	mi
Trucks and buses PCE, ET	2.0	
Recreational vehicles PCE, ER	3.0	
Heavy vehicles adjustment, fHV	0.800	
Driver population factor, fp	1.00	
Flow rate, vp	7322	pc/h
Desired level of service	D	

Speed Inputs and Adjustments

Lane width, LW	12.0	ft
Right-shoulder lateral clearance, LC	6.0	ft
Interchange density, ID	0.20	interchange/mi
Free-flow speed:	Base	
FFS or BFFS	70.0	mi/h
Lane width adjustment, fLW	0.0	mi/h
Lateral clearance adjustment, fLC	0.0	mi/h
Interchange density adjustment, fID	0.0	mi/h
Number of lanes adjustment, fN	1.5	mi/h
Free-flow speed	68.5	mi/h
	Urban Freeway	

LOS and Performance Measures

Desired level of service	D	
Design flow rate, vp	7322	pc/h
Design free-flow speed, FFS	68.5	mi/h
Number of lanes required, N	4	
Average passenger-car speed, S	66.4	mi/h

Density, D	27.6	:/mi/ln
Level of service	D	

Fewer number of lanes required will not produce the desired LOS.
Overall results are not computed when free-flow speed is less than 55 mph.

HCS2000: Ramps and Ramp Junctions Release 4.1d

Phone:
E-mail:

Fax:

Diverge Analysis

Analyst:	Sameer S Patharkar
Agency/Co.:	Ayres Associates Inc
Date performed:	7/20/2005
Analysis time period:	AM Peak Hour
Freeway/Dir of Travel:	I-85 SB
Junction:	State Route 53
Jurisdiction:	Jackson County
Analysis Year:	2029
Description:	Parallel Ramp

Freeway Data

Type of analysis	Diverge	
Number of lanes in freeway	4	
Free-flow speed on freeway	70.0	mph
Volume on freeway	5565	vph

Off Ramp Data

Side of freeway	Right	
Number of lanes in ramp	1	
Free-Flow speed on ramp	55.0	mph
Volume on ramp	1000	vph
Length of first accel/decel lane	715	ft
Length of second accel/decel lane		ft

Adjacent Ramp Data (if one exists)

Does adjacent ramp exist?	No	
Volume on adjacent ramp		vph
Position of adjacent ramp		
Type of adjacent ramp		
Distance to adjacent ramp		ft

Conversion to pc/h Under Base Conditions

Junction Components	Freeway		Ramp		Adjacent Ramp	
Volume, V (vph)	5565		1000			vph
Peak-hour factor, PHF	0.95		0.95			
Peak 15-min volume, v15	1464		263			v
Trucks and buses	25		25			%
Recreational vehicles	0		0			%
Terrain type:	Rolling		Rolling			
Grade	0.00	%	0.00	%		%
Length	0.00	mi	0.00	mi		mi
Trucks and buses PCE, ET	2.5		2.5			
Recreational vehicle PCE, ER	2.0		2.0			

Heavy vehicle adjustment, f_{HV}	0.727	0.727	
Driver population factor, f_P	1.00	1.00	
Flow rate, v_p	8055	1447	pcph

Estimation of V12 Diverge Areas

L_{EQ} = (Equation 25-8 or 25-9)

P_{FD} = 0.436 Using Equation 8

$v_{12} = v_R + (v_F - v_R) P_{FD}$ = 4328 pc/h

Capacity Checks

	Actual	Maximum	LOS F?
$v_{Fi} = v_F$	8055	9600	No
v_{12}	4328	4400	No
$v_{FO} = v_F - v_R$	6608	9600	No
v_R	1447	2200	No

Level of Service Determination (if not F)

Density, $D_R = 4.252 + 0.0086\, v_{12} - 0.009\, L_D$ = 35.0+ pc/mi/ln

Level of service for ramp-freeway junction areas of influence E

Speed Estimation

Intermediate speed variable, D_S = 0.298

Space mean speed in ramp influence area, S_R = 61.6 mph

Space mean speed in outer lanes, S_O = 73.4 mph

Space mean speed for all vehicles, S = 66.6 mph

HCS2000: Ramps and Ramp Junctions Release 4.1d

Phone:
E-mail:

Fax:

Merge Analysis

Analyst:	Sameer S Patharkar
Agency/Co.:	Ayres Associates Inc
Date performed:	7/20/2005
Analysis time period:	PM
Freeway/Dir of Travel:	I-85 NB
Junction:	SR 53
Jurisdiction:	Jackson County
Analysis Year:	2029
Description:	

Freeway Data

Type of analysis	Merge	
Number of lanes in freeway	4	
Free-flow speed on freeway	70.0	mph
Volume on freeway	4565	vph

On Ramp Data

Side of freeway	Right	
Number of lanes in ramp	1	
Free-flow speed on ramp	55.0	mph
Volume on ramp	1000	vph
Length of first accel/decel lane	1400	ft
Length of second accel/decel lane		ft

Adjacent Ramp Data (if one exists)

Does adjacent ramp exist?	No	
Volume on adjacent Ramp		vph
Position of adjacent Ramp		
Type of adjacent Ramp		
Distance to adjacent Ramp		ft

Conversion to pc/h Under Base Conditions

Junction Components	Freeway	Ramp	Adjacent Ramp	
Volume, V (vph)	4565	1000		vph
Peak-hour factor, PHF	0.95	0.95		
Peak 15-min volume, v15	1201	263		v
Trucks and buses	25	25		%
Recreational vehicles	0	0		%
Terrain type:	Rolling	Rolling		
Grade	%	%	%	
Length	mi	mi	mi	
Trucks and buses PCE, ET	2.5	2.5		
Recreational vehicle PCE, ER	2.0	2.0		

Heavy vehicle adjustment, f_H	0.727	0.727	
Driver population factor, f_P	1.00	1.00	
Flow rate, v_p	6607	1447	pcph

Estimation of V12 Merge Areas

L_{EQ} = (Equation 25-2 or 25-3)

P_{FM} = 0.321 Using Equation 4

$v_{12} = v_F (P_{FM})$ = 2119 pc/h

Capacity Checks

	Actual	Maximum	LOS F?
v_{FO}	8054	9600	No
v_{R12}	3566	4600	No

Level of Service Determination (if not F)

Density, $D_R = 5.475 + 0.00734\, v_R + 0.0078\, v_{12} - 0.00627\, L_A$ = 23.8 pc/mi/ln

Level of service for ramp-freeway junction areas of influence C

Speed Estimation

Intermediate speed variable,	M_S = 0.305	
Space mean speed in ramp influence area,	S_R = 61.5	mph
Space mean speed in outer lanes,	S_O = 63.7	mph
Space mean speed for all vehicles,	S = 62.7	mph

HCS2000: Ramps and Ramp Junctions Release 4.1d

Phone: Fax:
E-mail:

Diverge Analysis

Analyst:	Sameer S Patharkar
Agency/Co.:	Ayres Associates Inc
Date performed:	7/20/2005
Analysis time period:	AM Peak Hour
Freeway/Dir of Travel:	I-85 SB
Junction:	State Route 11
Jurisdiction:	Jackson County
Analysis Year:	2029
Description:	Parallel Ramp

Freeway Data

Type of analysis	Diverge	
Number of lanes in freeway	4	
Free-flow speed on freeway	70.0	mph
Volume on freeway	5465	vph

Off Ramp Data

Side of freeway	Right	
Number of lanes in ramp	1	
Free-Flow speed on ramp	55.0	mph
Volume on ramp	1175	vph
Length of first accel/decel lane	715	ft
Length of second accel/decel lane		ft

Adjacent Ramp Data (if one exists)

Does adjacent ramp exist?	No	
Volume on adjacent ramp		vph
Position of adjacent ramp		
Type of adjacent ramp		
Distance to adjacent ramp		ft

Conversion to pc/h Under Base Conditions

Junction Components	Freeway		Ramp		Adjacent Ramp		
Volume, V (vph)	5465		1175				vph
Peak-hour factor, PHF	0.95		0.95				
Peak 15-min volume, v15	1438		309				v
Trucks and buses	25		25				%
Recreational vehicles	0		0				%
Terrain type:	Rolling		Rolling				
Grade	0.00	%	0.00	%		%	
Length	0.00	mi	0.00	mi		mi	
Trucks and buses PCE, ET	2.5		2.5				
Recreational vehicle PCE, ER	2.0		2.0				

Heavy vehicle adjustment, f_l	0.727	0.727	
Driver population factor, f_P	1.00	1.00	
Flow rate, v_p	7910	1701	pcph

Estimation of V12 Diverge Areas

L_{EQ} = (Equation 25-8 or 25-9)

P_{FD} = 0.436 Using Equation 8

$v_{12} = v_R + (v_F - v_R) P_{FD}$ = 4408 pc/h

Capacity Checks

	Actual	Maximum	LOS F?
$v_{Fi} = v_F$	7910	9600	No
v_{12}	4408	4400	Yes
$v_{FO} = v_F - v_R$	6209	9600	No
v_R	1701	2200	No

Level of Service Determination (if not F)

Density, $D_R = 4.252 + 0.0086\, v_{12} - 0.009\, L_D$ = 35.7 pc/mi/ln

Level of service for ramp-freeway junction areas of influence F

Speed Estimation

Intermediate speed variable,	D_S = 0.321	
Space mean speed in ramp influence area,	S_R = 61.0	mph
Space mean speed in outer lanes,	S_O = 73.9	mph
Space mean speed for all vehicles,	S = 66.1	mph

HCS2000: Ramps and Ramp Junctions Release 4.1d

Phone:
E-mail:

Fax:

Diverge Analysis

Analyst:	Sameer S Patharkar
Agency/Co.:	Ayres Associates Inc
Date performed:	7/20/2005
Analysis time period:	PM Peak Hour
Freeway/Dir of Travel:	I-85 NB
Junction:	State Route 11
Jurisdiction:	Jackson County
Analysis Year:	2029

Description: Parallel Ramp increased to standa

Freeway Data

Type of analysis	Diverge	
Number of lanes in freeway	3	
Free-flow speed on freeway	70.0	mph
Volume on freeway	5565	vph

Off Ramp Data

Side of freeway	Right	
Number of lanes in ramp	1	
Free-Flow speed on ramp	55.0	mph
Volume on ramp	1275	vph
Length of first accel/decel lane	1147	ft
Length of second accel/decel lane		ft

Adjacent Ramp Data (if one exists)

Does adjacent ramp exist?	No	
Volume on adjacent ramp		vph
Position of adjacent ramp		
Type of adjacent ramp		
Distance to adjacent ramp		ft

Conversion to pc/h Under Base Conditions

Junction Components	Freeway		Ramp		Adjacent Ramp	
Volume, V (vph)	5565		1275			vph
Peak-hour factor, PHF	0.95		0.95			
Peak 15-min volume, v15	1464		336			v
Trucks and buses	25		25			%
Recreational vehicles	0		0			%
Terrain type:	Rolling		Rolling			
Grade	0.00	%	0.00	%		%
Length	0.00	mi	0.00	mi		mi
Trucks and buses PCE, ET	2.5		2.5			
Recreational vehicle PCE, ER	2.0		2.0			

Heavy vehicle adjustment, f_H	0.727	0.727	
Driver population factor, f_P	1.00	1.00	
Flow rate, v_p	8055	1845	pcph

Estimation of V12 Diverge Areas

L_{EQ} = (Equation 25-8 or 25-9)

P_{FD} = 0.474 Using Equation 5

$v_{12} = v_R + (v_F - v_R) P_{FD}$ = 4787 pc/h

Capacity Checks

	Actual	Maximum	LOS F?
$v_{Fi} = v_F$	8055	7200	Yes
v_{12}	4787	4400	Yes
$v_{FO} = v_F - v_R$	6210	7200	No
v_R	1845	2200	No

Level of Service Determination (if not F)

Density, $D_R = 4.252 + 0.0086\, v_{12} - 0.009\, L_D$ = 35.1 pc/mi/ln

Level of service for ramp-freeway junction areas of influence F

Speed Estimation

Intermediate speed variable,	D_S = 0.334	
Space mean speed in ramp influence area,	S_R = 60.6	mph
Space mean speed in outer lanes,	S_O = 67.9	mph
Space mean speed for all vehicles,	S = 63.4	mph

HCS2000: Ramps and Ramp Junctions Release 4.1d

Phone:
E-mail:

Fax:

Diverge Analysis

Analyst:	Sameer S Patharkar
Agency/Co.:	Ayres Associates Inc
Date performed:	7/20/2005
Analysis time period:	PM Peak Hour
Freeway/Dir of Travel:	I-85 NB
Junction:	State Route 11
Jurisdiction:	Jackson County
Analysis Year:	2029
Description:	Parallel Ramp increased to standa

Freeway Data

Type of analysis	Diverge	
Number of lanes in freeway	4	
Free-flow speed on freeway	70.0	mph
Volume on freeway	5565	vph

Off Ramp Data

Side of freeway	Right	
Number of lanes in ramp	1	
Free-Flow speed on ramp	55.0	mph
Volume on ramp	1275	vph
Length of first accel/decel lane	1147	ft
Length of second accel/decel lane		ft.

Adjacent Ramp Data (if one exists)

Does adjacent ramp exist?	No	
Volume on adjacent ramp		vph
Position of adjacent ramp		
Type of adjacent ramp		
Distance to adjacent ramp		ft

Conversion to pc/h Under Base Conditions

Junction Components	Freeway		Ramp		Adjacent Ramp	
Volume, V (vph)	5565		1275			vph
Peak-hour factor, PHF	0.95		0.95			
Peak 15-min volume, v15	1464		336			v
Trucks and buses	25		25			%
Recreational vehicles	0		0			%
Terrain type:	Rolling		Rolling			
Grade	0.00	%	0.00	%		%
Length	0.00	mi	0.00	mi		mi
Trucks and buses PCE, ET	2.5		2.5			
Recreational vehicle PCE, ER	2.0		2.0			

Heavy vehicle adjustment, fl	0.727	0.727	
Driver population factor, fP	1.00	1.00	
Flow rate, vp	8055	1845	pcph

Estimation of V12 Diverge Areas

L_{EQ} = (Equation 25-8 or 25-9)

P_{FD} = 0.436 Using Equation 8

$v_{12} = v_R + (v_F - v_R) P_{FD}$ = 4553 pc/h

Capacity Checks

	Actual	Maximum	LOS F?
$v_{Fi} = v_F$	8055	9600	No
v_{12}	4553	4400	Yes
$v_{FO} = v_F - v_R$	6210	9600	No
v_R	1845	2200	No

Level of Service Determination (if not F)

Density, $D_R = 4.252 + 0.0086\, v_{12} - 0.009\, L_D$ = 33.1 pc/mi/ln

Level of service for ramp-freeway junction areas of influence F

Speed Estimation

Intermediate speed variable, D_S = 0.334

Space mean speed in ramp influence area, S_R = 60.6 mph

Space mean speed in outer lanes, S_O = 73.9 mph

Space mean speed for all vehicles, S = 65.8 mph

HCS2000: Ramps and Ramp Junctions Release 4.1d

Phone:
E-mail:

Fax:

Merge Analysis

Analyst:	Sameer S Patharkar
Agency/Co.:	Ayres Associates Inc
Date performed:	7/20/2005
Analysis time period:	AM
Freeway/Dir of Travel:	I-85 SB
Junction:	SR 11
Jurisdiction:	Jackson County
Analysis Year:	2029
Description:	

Freeway Data

Type of analysis	Merge	
Number of lanes in freeway	3	
Free-flow speed on freeway	70.0	mph
Volume on freeway	4290	vph

On Ramp Data

Side of freeway	Right	
Number of lanes in ramp	1	
Free-flow speed on ramp	55.0	mph
Volume on ramp	1275	vph
Length of first accel/decel lane	1400	ft
Length of second accel/decel lane		ft

Adjacent Ramp Data (if one exists)

Does adjacent ramp exist?	No	
Volume on adjacent Ramp		vph
Position of adjacent Ramp		
Type of adjacent Ramp		
Distance to adjacent Ramp		ft

Conversion to pc/h Under Base Conditions

Junction Components	Freeway	Ramp	Adjacent Ramp	
Volume, V (vph)	4290	1275		vph
Peak-hour factor, PHF	0.95	0.95		
Peak 15-min volume, v15	1129	336		v
Trucks and buses	25	25		%
Recreational vehicles	0	0		%
Terrain type:	Rolling	Rolling		
Grade	%	%	%	
Length	mi	mi	mi	
Trucks and buses PCE, ET	2.5	2.5		
Recreational vehicle PCE, ER	2.0	2.0		

Heavy vehicle adjustment, fH	0.727	0.727	
Driver population factor, fP	1.00	1.00	
Flow rate, vp	6209	1845	pcph

Estimation of V12 Merge Areas

L_{EQ} = (Equation 25-2 or 25-3)

P_{FM} = 0.617 Using Equation 1

$v_{12} = v_F (P_{FM})$ = 3829 pc/h

Capacity Checks

	Actual	Maximum	LOS F?
v_{FO}	8054	7200	Yes
v_{R12}	5674	4600	Yes

Level of Service Determination (if not F)

Density, $D_R = 5.475 + 0.00734\, v_R + 0.0078\, v_{12} - 0.00627\, L_A$ = 40.1 pc/mi/ln

Level of service for ramp-freeway junction areas of influence F

Speed Estimation

Intermediate speed variable,	M_S = 1.303	
Space mean speed in ramp influence area,	S_R = 33.5	mph
Space mean speed in outer lanes,	S_O = 63.0	mph
Space mean speed for all vehicles,	S = 38.9	mph

HCS2000: Ramps and Ramp Junctions Release 4.1d

Phone:
E-mail:

Fax:

Merge Analysis

Analyst:	Sameer S Patharkar
Agency/Co.:	Ayres Associates Inc
Date performed:	7/20/2005
Analysis time period:	AM
Freeway/Dir of Travel:	I-85 SB
Junction:	SR 11
Jurisdiction:	Jackson County
Analysis Year:	2029
Description:	

Freeway Data

Type of analysis	Merge	
Number of lanes in freeway	4	
Free-flow speed on freeway	70.0	mph
Volume on freeway	4290	vph

On Ramp Data

Side of freeway	Right	
Number of lanes in ramp	1	
Free-flow speed on ramp	55.0	mph
Volume on ramp	1275	vph
Length of first accel/decel lane	1400	ft
Length of second accel/decel lane		ft

Adjacent Ramp Data (if one exists)

Does adjacent ramp exist?	No	
Volume on adjacent Ramp		vph
Position of adjacent Ramp		
Type of adjacent Ramp		
Distance to adjacent Ramp		ft

Conversion to pc/h Under Base Conditions

Junction Components	Freeway	Ramp	Adjacent Ramp	
Volume, V (vph)	4290	1275		vph
Peak-hour factor, PHF	0.95	0.95		
Peak 15-min volume, v15	1129	336		v
Trucks and buses	25	25		%
Recreational vehicles	0	0		%
Terrain type:	Rolling	Rolling		
Grade	%	%	%	
Length	mi	mi	mi	
Trucks and buses PCE, ET	2.5	2.5		
Recreational vehicle PCE, ER	2.0	2.0		

Heavy vehicle adjustment, f_H	0.727	0.727	
Driver population factor, f_P	1.00	1.00	
Flow rate, vp	6209	1845	pcph

Estimation of V12 Merge Areas

L_{EQ} = (Equation 25-2 or 25-3)

P_{FM} = 0.271 Using Equation 4

$v_{12} = v_F (P_{FM})$ = 1683 pc/h

Capacity Checks

	Actual	Maximum	LOS F?
v_{FO}	8054	9600	No
v_{R12}	3528	4600	No

Level of Service Determination (if not F)

Density, $D_R = 5.475 + 0.00734\, v_R + 0.0078\, v_{12} - 0.00627\, L_A$ = 23.4 pc/mi/ln

Level of service for ramp-freeway junction areas of influence C

Speed Estimation

Intermediate speed variable,	M_S = 0.300	
Space mean speed in ramp influence area,	S_R = 61.6	mph
Space mean speed in outer lanes,	S_O = 63.7	mph
Space mean speed for all vehicles,	S = 62.7	mph

HCS2000: Ramps and Ramp Junctions Release 4.1d

Phone:
E-mail:

Fax:

Merge Analysis

Analyst:	Sameer S Patharkar
Agency/Co.:	Ayres Associates Inc
Date performed:	7/20/2005
Analysis time period:	PM
Freeway/Dir of Travel:	I-85 NB
Junction:	SR 11
Jurisdiction:	Jackson County
Analysis Year:	2029
Description:	

Freeway Data

Type of analysis	Merge	
Number of lanes in freeway	4	
Free-flow speed on freeway	70.0	mph
Volume on freeway	4290	vph

On Ramp Data

Side of freeway	Right	
Number of lanes in ramp	1	
Free-flow speed on ramp	55.0	mph
Volume on ramp	1175	vph
Length of first accel/decel lane	1400	ft
Length of second accel/decel lane		ft

Adjacent Ramp Data (if one exists)

Does adjacent ramp exist?	No	
Volume on adjacent Ramp		vph
Position of adjacent Ramp		
Type of adjacent Ramp		
Distance to adjacent Ramp		ft

Conversion to pc/h Under Base Conditions

Junction Components	Freeway	Ramp	Adjacent Ramp	
Volume, V (vph)	4290	1175		vph
Peak-hour factor, PHF	0.95	0.95		
Peak 15-min volume, v15	1129	309		v
Trucks and buses	25	25		%
Recreational vehicles	0	0		%
Terrain type:	Rolling	Rolling		
Grade	%	%	%	
Length	mi	mi	mi	
Trucks and buses PCE, ET	2.5	2.5		
Recreational vehicle PCE, ER	2.0	2.0		

Heavy vehicle adjustment, f_l	0.727	0.727	
Driver population factor, f_P	1.00	1.00	
Flow rate, v_p	6209	1701	pcph

Estimation of V12 Merge Areas

L_{EQ} = (Equation 25-2 or 25-3)

P_{FM} = 0.289 Using Equation 4

$v_{12} = v_F (P_{FM})$ = 1794 pc/h

Capacity Checks

	Actual	Maximum	LOS F?
v_{FO}	7910	9600	No
v_{R12}	3495	4600	No

Level of Service Determination (if not F)

Density, $D_R = 5.475 + 0.00734\, v_R + 0.0078\, v_{12} - 0.00627\, L_A$ = 23.2 pc/mi/ln

Level of service for ramp-freeway junction areas of influence C

Speed Estimation

Intermediate speed variable,	M_S = 0.296	
Space mean speed in ramp influence area,	S_R = 61.7	mph
Space mean speed in outer lanes,	S_O = 63.9	mph
Space mean speed for all vehicles,	S = 62.9	mph