VALUE ENGINEERING STUDY

Project # BRST0-0524-00(009) PI No. 442951-

SR 234 Over Chickasawhatchee Creek
Calhoun/Dougherty Counties, Georgia

Prepared for:

Georgia Department of Transportation

One Georgia Center
600 West Peachtree NW
Atlanta, Georgia 30308

24 May 2012

U.S. COST

1200 Abernathy Road, Building 600, Suite 950
Atlanta, Georgia 30328
770-481-1600 Fax 770-481-1640

24 May 2012

Mr. Matt Sanders, AVS
Value Engineering Specialist
GDOT - Engineering Services
One Georgia Center - 5th Floor
600 W. Peachtree Street NW
Atlanta, GA 30308

Re: V.E. Workshop – SR 234 Over Chickasawhatchee Creek, Calhoun/Dougherty Counties, GA
Project #: BRST0-0524-00(009) - PI#: 442951-

Dear Mr. Sanders:

U.S. Cost, Inc. is pleased to submit two (2) hard copies and one (1) CD of the Value Engineering Study Report on the above referenced project. We appreciate the assistance and participation of the GDOT management personnel as well as the GDOT design team.

This Workshop resulted in the development of sixteen (16) value-enhancing proposals. We hope that incorporation of some of these value improvement alternatives provided herein results in an enhanced project in relation to cost, constructability and long-term performance of the project features.

Please feel free to contact me to discuss any information within this report. We look forward to the next opportunity to be of service to the Georgia Department of Transportation.

Sincerely,

U.S. COST INCORPORATED

Tom Orr, P.E., CVS
V.E. Team Leader

CC: L. Myers, GDOT

TABLE OF CONTENTS

Executive Summary
Project Description and Background 4
Key Information/Notes..... 5
Value Engineering Results……..... 10
Summary of Value Engineering Proposals..... 13

Proposals
Bridge/Structures (B)..... 15
Roadway (R)..... 52

Appendix
Sign-in Sheet .....…..... 110
Function Analysis.....…..... 111
Cost Model .....…… 112
Brainstorming or Speculation Ideas .....…..... 113
Team Study Agenda 115

PROJECT DESCRIPTION

This SR 234 Over Chickasawhatchee Creek project involves roadway work and replacement of a load-limited bridge in Calhoun and Dougherty Counties in Georgia. The improvements involve construction of a new bridge, construction of new roadway sections and tie-ins, replacement of a bridge culvert, and construction of a new bridge culvert.

The proposed project involves work along a 1.184 mile section of SR 234 for replacement of a structurally deficient bridge over Chickasawhatchee Creek. The proposed concept for the project includes constructing the new bridge and roadway approaches as an offset to the existing bridge and roadway and utilizing the existing roadway corridor as the on-site detour during construction. The new roadway consists of a two-lane roadway with 12' travel lanes and 6.5' paved shoulders. Generally, the right-of-way varies from 100 to 150 feet throughout the corridor.

A new 550-foot long bridge over Chickasawhatchee Creek, as well as construction of a triple 9'x6' overflow bridge culvert is included East of the new bridge in the same location of the existing overflow culvert. In addition, a new triple 9'x6' overflow bridge culvert is being constructed West of the new bridge. The corridor has existing wetlands areas on both sides of the roadway.

Project components include:

- A new 11-span, 550' long bridge.
- Replacement of the existing overflow bridge culvert to the East of the bridge
- Construction of a new overflow bridge culvert to the West of the bridge
- New 2-lane (12' travel lanes) roadway with tie-ins East and West of the new bridge
- Wetland mitigation of 14.9 acres

KEY INFORMATION/NOTES

Introduction

U.S. Cost conducted the Value Engineering Team Study on SR 234 Over Chickasawhatchee Creek. The V.E. study was conducted for three and ½ days, 21 - 24 May 2012, at the Georgia Department of Transportation 5th floor Conference Room in Atlanta, GA. The study team was furnished with preliminary phase documents for use in conducting the VE workshop. The following individuals were members of the V.E. team:

Name	Firm	Discipline
Tom Orr, P.E., CVS	U.S. Cost, Inc.	VE Team Leader (VETL)
Ashley Zellner, P.E.	LPA Group	Bridge/Structures
Jerry Brooks, P.E.	Kimley-Horn	Roadway Engineer
Lenor Bromberg, P.E., AVS	KEA Group	Construction

Value Engineering Study Process

The Value Engineering Study followed the Value Engineering Job Plan as certified by SAVE International as follows:

- Information Phase (Monday)
- Function Analysis Phase (Monday)
- Creative Phase (Monday)
- Evaluation Phase (Monday)
- Development Phase (Tuesday - Wednesday)
- Presentation Phase (Thursday AM)

Information Phase

The V.E. team was first briefed on the project design by Georgia DOT management and design team representatives in a Design Presentation the morning of the first day of the V.E. Study. The briefing included a review of the design requirements and rationale for the selection and arrangement of the major project features. Discussions regarding alternatives considered, adjacent properties/facilities, and project criteria and constraints were included in the design presentation.

KEY INFORMATION/NOTES

Project Design Criteria

During the meeting, project design criteria were identified. The following listing identifies the design criteria with which the project must comply:

AASHTO Design Policies
FHWA Design Policies
Wetlands Restrictions
Other Environmental Restrictions (EA Requirements TBD)

Project Constraints

Project constraints were discussed; however, at the time of the V.E. workshop an agreement had not been reached with U.S. Fish and Wildlife, thus it was determined that the project approach did not contain any constraints that could not be altered.

Function Analysis

As a basic part of the V.E. process, the team conducted a Function Analysis session on the SR 234 Over Chickasawhatchee Creek project to identify the needs and goals of the project and facilitate the creative idea session, by addressing functions as opposed to the specific design elements.

The Basic Function of the project is to ***"****Replace (Deficient) Bridge"*. A detailed project function analysis of the characteristics of the project and the project features is presented in the Appendix.

Risk Analysis

The group identified the following project risk elements, which may impact the SR 234 Over Chickasawhatchee Creek project. This exercise served as a catalyst for the Creative Phase of the study when several ideas were suggested which would mitigate these project risks.

KEY INFORMATION/NOTES

Risk Elements/Concerns

- Gaining Approval with U.S. Fish and Wildlife
- Potential for Seasonal Work Restrictions due to Environmental Issues
- Variable Soil Conditions
- Impacts to Traffic at Tie-ins
- Soils Report Based on Alignment with 210' Offset
- Adverse Stream and Wetlands Impacts
- Protection of On-site Species
- Construction Traffic
- Bridge Construction with Environmental Restrictions
- Bridge Removal Constraints/Restrictions

Creative Phase

The Creative Phase of the V.E. study was initiated the afternoon of the first day of the study. A total of twenty-seven (27) creative ideas were generated for further investigation by the team. The creative ideas focused on areas of the project which the VE Team felt had the most opportunity for value improvement, including:

- Lowering the vertical profile and reducing earthwork quantities
- Reducing the offset with the existing roadway and both reducing earthwork and minimizing wetlands impacts
- Reducing number of bridge spans
- Reducing length of new bridge
- Reducing length of new roadway required
- Steepening side slopes and reducing earthwork quantities

Additional ideas were generated reflecting alternative project components based on an understanding of local construction products and materials and the relative costs of installing them.

A listing of all creative ideas on this project is included in the Appendix.

KEY INFORMATION/NOTES

Alternative Idea Evaluation Criteria

The session participants identified the characteristics for evaluating the V.E. ideas for which alternatives would be the most acceptable for incorporation in the project. The highest ranked ideas would satisfy several of these criteria. The evaluation criteria for V.E. ideas are as follows:

V.E. Idea Evaluation Criteria

Reduces Construction Time
Improves Constructability
Reduces Environmental Impacts
Improves Traffic During Construction
Reduces Costs
Reduces Right-of-Way Impacts

Evaluation Phase

The ideas generated during the Creative Phase were reviewed and evaluated by the VE session participants during an Analysis/Judgment Phase session at the end of the first study day. The intent of the meeting was to allow the participants an opportunity to discuss and evaluate the ideas. A few of the V.E. ideas were dropped at that time as being conceptually unacceptable. The ranking session consisted of the VE team members assigning a ranking for each idea. The Acceptability ranking was based on how each idea improves the value of the project when considered against the evaluation criteria listed previously. Those ideas, which the V.E. Team felt had the most promise were given a designation of 1-5 on acceptability. This is a time management tool to identify those proposals that have the greatest potential. Approximately sixteen (16) out of the original twenty-seven (27) creative ideas were deemed promising for further investigation and analysis by the V.E. team.

The time management ranking system used by the VE team is as follows:

ACCEPTABILITY OF IDEA

5 points - Excellent Idea
4 points – Very Good Idea
3 points - Good Idea
2 points - Fair Idea
1 point - Do Not Develop

KEY INFORMATION/NOTES

Development Phase

The specific proposals found in the body of this report represent the positive results of investigations by the V.E. team on the SR 234 Over Chickasawhatchee Creek project. Each proposal represents a quality enhancing or cost saving alternative, which is documented by words, drawings and numbers. The proposal format presents the idea, describes the original design element proposed for change and the proposed change, lists the perceived advantages and disadvantages of the proposed change and supports the idea with a detailed cost estimate for the original and proposed design. Where necessary for clarity, the proposal also includes thumbnail design drawings and supporting engineering calculations.

Presentation Phase

A presentation to the GDOT representatives was conducted 24 May 2012 at 9AM.

Basis of V.E. Cost Savings

The cost information for proposals in this report are based on the cost data prepared by the design team, GDOT Item Mean Summary (Jan. 9, 2012), VE Team member experience, and discussions with vendors/Contractors. Overhead and profit are included in the project cost estimate and the GDOT Item Mean. Therefore, no additional markups are applied. The savings presented in the proposals is a general order of magnitude (estimate of the potential savings) if the idea were to be accepted. These figures are solely intended to identify the most attractive design solution, and are not prepared to represent a net deduction to the overall project budget. The costs are in 2012 dollars.

Evaluation of Alternatives

When reviewing the value engineering proposals, consider each part of an alternative on its own merit. There may be a tendency to disregard an entire alternative because of a concern about one aspect of it. We encourage partial acceptance of ideas; thus, each aspect of an alternative should be considered for incorporation into the design, even if the entire alternative is not implemented. Variations of these proposed alternatives are encouraged.

Several of these alternatives are either “mutually exclusive”/or have overlapping cost savings with other alternatives. These are indicated in the Proposal Summary Table. Items indicated as mutually exclusive indicates that acceptance of one alternative, precludes acceptance of the related proposal. Decision-makers are encouraged to evaluate these alternatives carefully in order to select the combination of alternatives that provides the greatest benefits to the project.

VALUE ENGINEERING RESULTS

The VE Team generated 27 creative ideas and developed 16 proposals for consideration by GDOT. Brief outlines of the VE proposals are as follows:

Proposal Highlights

B-1.0 - Increase Span Lengths on Bridge Using Type III PSC Girders and Use 8-Span Bridge (50'-6@75'-50' Spans) in lieu of 11 Spans at 50' Using Type II PSC Girders. The current design of the 550' long bridge over Chickasawhatchee Creek on this project consists of 11 - 50' spans utilizing Type II PSC beams. Proposal B-1.0 proposes to construct an 8-span bridge utilizing Type III PSC beams with 6 – 75' interior spans and 2 – 50' end spans to achieve the required 550' length. This alternative will save $38,000 in construction costs, reduce the schedule by 1 month and also reduce environmental impacts due to construction of fewer bents.

B-1.1 - Increase Span Lengths on Bridge Using BT-54 girders and Use 5-Span Bridge @ 110' in lieu of 11 Spans @ 50' Using Type II PSC Girders. The current design of the 550' long bridge over Chickasawhatchee Creek on this project consists of 11 - 50' spans utilizing Type II PSC beams. As an alternative to B-1.0, Proposal B-1.1 proposes to construct a 5-span bridge utilizing 54" Bulb-Tee PSC beams with 5 – 110' spans to achieve the required 550' length. This alternative is basically a cost neutral proposal, but reduces the schedule by 2-3 months and also reduces environmental impacts due to construction of fewer bents.

B-1.2 - Increase Span Lengths on Bridge Using Florida I-Beam (FIB) Girders and Use 3-Span Bridge @ 183' in lieu of 11 Spans @ 50' Using Type II PSC Girders. The current design of the 550' long bridge over Chickasawhatchee Creek on this project consists of 11 - 50' spans utilizing Type II PSC beams. As an alternative to both B-1.0 and B-1.1, Proposal B-1.2 proposes to construct a 3-span bridge utilizing 84" Florida I-Beams (FIB) with 3 – 183' spans to achieve the required 550' length. This alternative requires additional costs of $490,000, but reduces the schedule by 2 months and also reduces both temporary environmental impacts during construction and greatly reduces permanent stream impacts due to utilizing fewer bents.

B-4.0 - Use 4,000 PSI concrete for bridge deck design in lieu of 3,500 PSI and reduce thickness. The current design utilizes 3,500 PSI concrete for the bridge deck design, which results in a specified deck thickness of 7-7/8". In B-4.0, it is proposed to utilize 4,000 PSI concrete for the bridge deck design, allowing a reduction in bridge deck thickness from 7-7/8" to 7-1/2". This alternative would save approximately $17,000 and increase the durability of the bridge deck.

VALUE ENGINEERING RESULTS

B-5.0 - Increase beam spacing from 8'-9" to 11'-4" and reduce number of beams per span from 5 to 4. The current design of the 550' long bridge over Chickasawhatchee Creek on this project consists of 11 - 50' Type II PSC beam spans utilizing girders at 8'-9" spacing (5 girders per span). In B-5.0, it is proposed to increase the beam spacing to 11'-4" and reduce the number of beams to 4 per span. This alternative provides a project cost savings of approximately $29,000 and allows for a reduction in piles and an associated reduction in environmental impacts.

B-6.0 - Re-locate the Location of Bridge Expansion Joint and Bridge Tower Bent to Reduce the Number of Pilot Holes Required. The current design of the 550' long bridge consists of 11 - 50' spans requiring 10 - PSC Pile Intermediate Bents. An expansion joint is placed at Bent 6, effectively separating the bridge into a 5 span unit (West end) and a 6 span unit (East end). The 6 span unit apparently requires a tower bent, currently located at Bent 9. In B-6.0, it is proposed to move the expansion joint from Bent 6 to Bent 7 and to relocate the tower bent from Bent 9 to Bent 4. The proposal will save a total of $21,000, and reduce environmental impacts due to construction of fewer pilot holes.

R-1.0 - Shift Horizontal Alignment to 60' Offset (centerline to centerline) from Current 100'. The current design constructs the proposed bridge alignment South of the existing bridge at a 100' offset (centerline to centerline). Proposal R-1.0 proposes to shift the alignment North by 40' and provide a 60'offset (centerline to centerline). This would provide an estimated $860,000 cost savings and reduce earthwork, right-of-way costs, and environmental impacts.

R-1.1 - Shift Horizontal Alignment to 40' Offset (centerline to centerline) from Current 100'. The current design constructs the proposed bridge alignment South of the existing bridge at a 100' offset (centerline to centerline). As an alternative to R-1.0, Proposal R-1.1 proposes to shift the alignment North by 60' and provide a 40'offset (centerline to centerline). This would provide an estimated $1,290,000 cost savings and further reduce earthwork, right-of-way costs, and environmental impacts.

R-2.0 - Lower the Vertical Alignment of SR234 from Sta 24+00 to Sta 78+00 as much as 6 feet at Sta 59+00 with the Elevation of the Proposed Bridge from Sta 45+13 to Sta 50+63 Being Lowered Approximately 4 feet. Proposal R-2.0 proposes lowering the vertical alignment by 4 feet at the bridge and as much as 6 feet in other locations (see proposal for specifics). This alternative provides a savings of approximately $410,000.

R-3.0 - Shorten Horizontal Curves at Tie-ins. The current design alignment utilizes a 3,819.72' radius at a superelevation rate of 3.8% at the project beginning and a 2,864.79' radius at a superelevation rate of 5.0% at the project end. In R-3.0, it is proposed to utilize a 1,890' radius at a superelevation rate of 5.0% at the project beginning and a 2,200' radius at a superelevation rate of 4.2% at the project end. This alternative provides a savings in construction costs of approximately $385,000.

VALUE ENGINEERING RESULTS

R-4.0 - Use normal fill slopes of 4:1 with a maximum of 2:1 for the side slopes on the North side of the proposed roadway in lieu of the fill slopes that vary from 6:1 to 26:1. In the current design, fill slopes on North side of proposed roadway vary from 6:1 to 26:1, and are projected to the toe of slope on the North side of the existing roadway. It is proposed to use normal slopes of 4:1 typical with 2:1 maximum for the proposed roadway. This alternative saves approximately $267,000.

R-6.0 - Reduce Width of Paved Shoulder from 6.5' to 2'and Utilize Full Depth Shoulder. The current design of SR 234 includes two 12' wide travel lanes with a 6.5' paved shoulder. In R-6.0, it is proposed to reduce the width of the paved shoulder on the roadway from 6.5' to 2' and construct the shoulder section the same as the adjacent roadway pavement section. This proposal provides approximately $87,000 in cost savings.

R-6.1 - Reduce Width of Paved Shoulder from 6.5' to 4'. The current design of SR 234 includes two 12' wide travel lanes with a 6.5' paved shoulder. As an alternative to R-6.0, proposal R-6.1 proposes to reduce the width of the paved shoulder on the roadway from 6.5' to 4' with the shoulder section being the same as the current design of the shoulder. This proposal provides approximately $82,000 in cost savings.

R-10.0 - Use a 90˚ Culvert in lieu of the Skewed Triple 9' x 6'Reinforced Concrete Bridge Culvert Planned as an Overflow Structure at Approximate Sta 62+50. The current design includes a triple 9' x 6' reinforced concrete bridge culvert to replace the existing overflow culvert East of the bridge around Sta 62+50. Currently it is skewed from the outlet of the existing structure to an approximate location of the outfall channel. In R-10.0, it is proposed to use a 90˚ culvert at the approximate location in lieu of the skewed culvert. This proposal provides approximately $95,000 in cost savings.

R-11.0 - Eliminate the Western Triple 10' x 6' Overflow Culvert Proposed at Approximate Sta 41+00. The current design includes a triple 10' x 6' reinforced concrete bridge culvert to serve as an overflow structure on the West side of the bridge at approximate Sta 41+00. There is not an existing overflow structure on the West side of the current bridge. It is proposed to eliminate the new overflow culvert located West of the new bridge. This proposal provides approximately $174,000 in cost savings.

R-14.0 - Construct fill slopes on North side of proposed roadway using 4:1 slopes in lieu of 2:1 slopes during stage construction and eliminate the need for temporary barrier. The current design includes Stage 1 construction with a temporary 2:1 fill slope on the North or left side of the road with a temporary concrete barrier to protect the slope hazard. It is proposed to construct temporary 4:1 slopes in lieu of the 2:1 slopes and omit the requirement for any temporary concrete barrier. This proposal is estimated to save approximately $53,000.

SUMMARY OF VALUE ENGINEERING PROPOSALS

Project # BRST0-0524-00(009)PI No. 442951-
SR 234 OVER CHICKASAWHATCHEE CREEK
CALHOUN/DOUGHERTY COUNTIES, GEORGIA

IDEA NO.	PROPOSAL DESCRIPTION	CONSTRUCTION SAVINGS	RELATED PROPOSALS
	Note: Brackets mean additional cost		
	BRIDGES/STRUCTURES (B)		
1.0	Increase Span Lengths on Bridge Using Type III PSC Girders and Use 8-Span Bridge (50'-6@75'-50' Spans) in lieu of 11 Spans at 50' Using Type II PSC Girders.	38,047	Mutually exclusive with B-1.1 and B-1.2
1.1	Increase Span Lengths on Bridge Using BT-54 girders and Use 5-Span Bridge @ 110' in lieu of 11 Spans @ 50' Using Type II PSC Girders	(245)	Mutually exclusive with B-1.0 and B-1.2
1.2	Increase Span Lengths on Bridge Using Florida I-Beam (FIB) Girders and Use 3-Span Bridge @ 183' in lieu of 11 Spans @ 50' Using Type II PSC Girders	(490,879)	Mutually exclusive with B-1.0 and B-1.1
4.0	Use 4,000 psi Concrete for Bridge Deck in lieu of 3,500 PSI and Reduce Deck Thickness	16,962	
5.0	Increase beam spacing from 8'-9" to 11'-4" and reduce number of beams per span from 5 to 4	29,408	
6.0	Re-locate Expansion Joint and Tower Bent to Reduce the Number of Required Pilot Holes	21,500	Mutually exclusive with B-1.0, B-1.1 and B-1.2
	ROADWAY (R)		
1.0	Shift Horizontal Alignment to 60' Offset (Centerline-to-Centerline) in lieu of Current 100' Offset	857,492	Mutually exclusive with R-1.1
1.1	Shift Horizontal Alignment to 40' Offset (Centerline-to-Centerline) in lieu of Current 100' Offset	1,288,677	Mutually exclusive with R-1.0

SUMMARY OF VALUE ENGINEERING PROPOSALS

Project # BRST0-0524-00(009)PI No. 442951-
SR 234 OVER CHICKASAWHATCHEE CREEK
CALHOUN/DOUGHERTY COUNTIES, GEORGIA

IDEA NO.	PROPOSAL DESCRIPTION	CONSTRUCTION SAVINGS	RELATED PROPOSALS
	Note: Brackets mean additional cost		
2.0	Lower the Vertical Alignment of SR 234 from Sta 24+00 to Sta 78+00 as much as 6 feet at Sta 59+00 with the Elevation of the Proposed Bridge from Sta 45+13 to Sta 50+63 Being Lowered Approximately 4 feet	411,363	Savings overlap with R-4.0
3.0	Shorten Horizontal Curves at Tie-ins	384,758	Savings Overlap with R-1.0 and R-1.1
4.0	Use normal fill slopes of 4:1 with a maximum of 2:1 for the side slopes on the North side of the proposed roadway in lieu of the fill slopes that vary from 6:1 to 26:1	267,093	Savings overlap with R-2.0 and R-14.0
6.0	Reduce Width of Paved Shoulder from 6.5’ to 2’ and Utilize Full Depth Shoulder	86,770	Mutually exclusive with R-6.1
6.1	Reduce Width of Paved Shoulder from 6.5’ to 4’	82,320	Mutually exclusive with R-6.0
10.0	Use 90-degree Culvert in Lieu of Skewed Culvert on Eastern End	94,758	
11.0	Eliminate New Westernmost Overflow Culvert	173,874	
14.0	Construct fill slopes on North side of proposed roadway using 4:1 slopes in lieu of 2:1 slopes during stage construction and eliminate the need for temporary barrier	53,460	Savings overlap with R-4.0

VALUE ENGINEERING PROPOSAL

PROPOSAL NUMBER:	B-1.0	PAGE NUMBER:	1 of 7

PROJECT #/PI #:	**BRST0-0524-00(009) / 442951-**
PROJECT TITLE:	**SR 234 over Chickasawhatchee Creek, Calhoun/Dougherty**

PROPOSAL DESCRIPTION: INCREASE SPAN LENGTHS ON BRIDGE USING TYPE III GIRDERS AND USE 8-SPAN BRIDGE (50'-6@75'-50' SPAN ARRANGEMENT) IN LIEU OF 11-SPANS @ 50'.

ORIGINAL DESIGN: The current design of the 550' long bridge over Chickasawhatchee Creek on this project consists of 11 - 50' Type II PSC beam spans utilizing girders at 8'-9" spacing (5 girders per span), with 2 - PSC Pile End Bents and 10 - PSC Pile Intermediate Bents.

PROPOSED CHANGE: It is proposed to utilize Type III PSC beams to increase the span lengths while maintaining the same beam spacing and number of beams per span. 6 – 75' interior spans and 2 – 50' end spans will achieve the required 550' length (8 spans/7 intermediate bents).

JUSTIFICATION: The increase in span lengths is justified by reducing the number of substructure units required, a reduction of 3 bents on this bridge. Due to the presence of federally protected wildlife and critical habitat at this bridge crossing, impacts from substructure construction are a concern. The current 50' spans are based on GDOT policy for preliminary design allowing for use of steel piling; however, the completed BFI for this project recommends PSC pile bents, which can support spans of this length. (Construction of concrete bents would increase environmental impacts, so will not be considered.) The hydraulic study shows that there is adequate clearance to accommodate the increase in structure depth this change will require. This proposal also provides a cost savings to the project.

ADVANTAGES:
- Reduces environmental impacts
- Shortens construction time by 1 month
- Reduces construction costs

DISADVANTAGES:
- Requires larger piles

	INITIAL COST	OPERATING COST	TOTAL LIFE-CYCLE COST
ORIGINAL DESIGN:	$ 586,057		$ 586,057
PROPOSED CHANGE:	$ 548,010		$ 548,010
SAVINGS:	$ 38,047		$ 38,047

COST ESTIMATING WORKSHEET

PROPOSAL NUMBER:	B-1.0	PAGE NUMBER:	2 of 7

PROJECT #/PI #:	BRST0-0524-00(009) / 442951-

ORIGINAL DESIGN

ITEM	SOURCE CODE	U/M	QTY	UNIT COST	TOTAL COST
11-Span Bridge (see calcs)	7				586,057
SUBTOTAL – COST TO PRIME					586,057
MARKUP				Incl.	--
TOTAL CONTRACT COST					**586,057**

PROPOSED CHANGE

ITEM	SOURCE CODE	U/M	QTY	UNIT COST	TOTAL COST
8-Span Bridge (see calcs)	7				548,010
SUBTOTAL – COST TO PRIME					548,010
MARKUP				Incl.	--
TOTAL CONTRACT COST					**548,010**

Difference [Original-Proposed] **38,047**

SOURCES

1. Project Cost Estimate
2. USC Estimate Database
3. GDOT Item Mean Summary
4. Means Estimating Manual
5. Richardson's Estimating Manual
6. Vendor (Specify)
7. Other (See calcs)

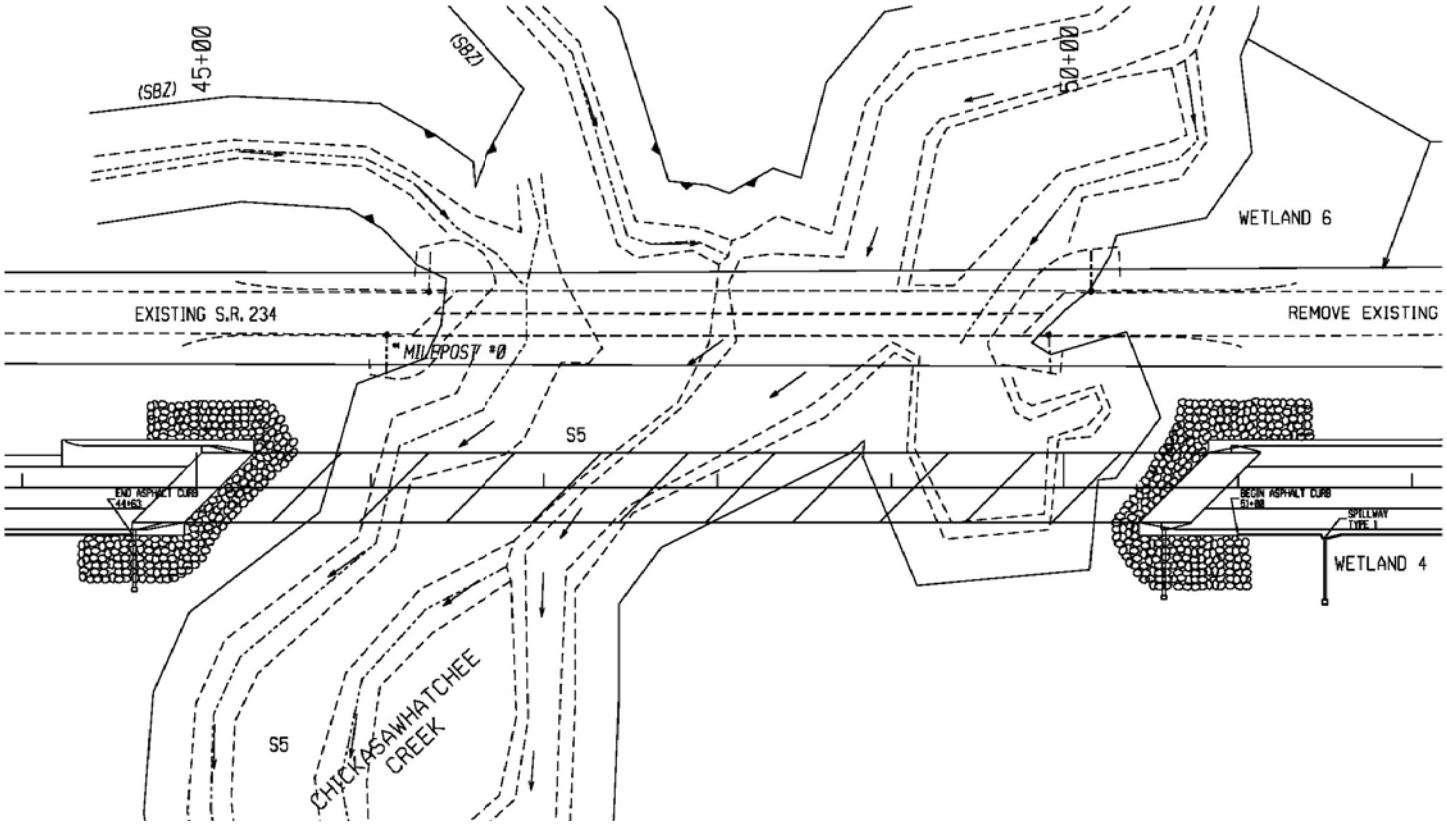

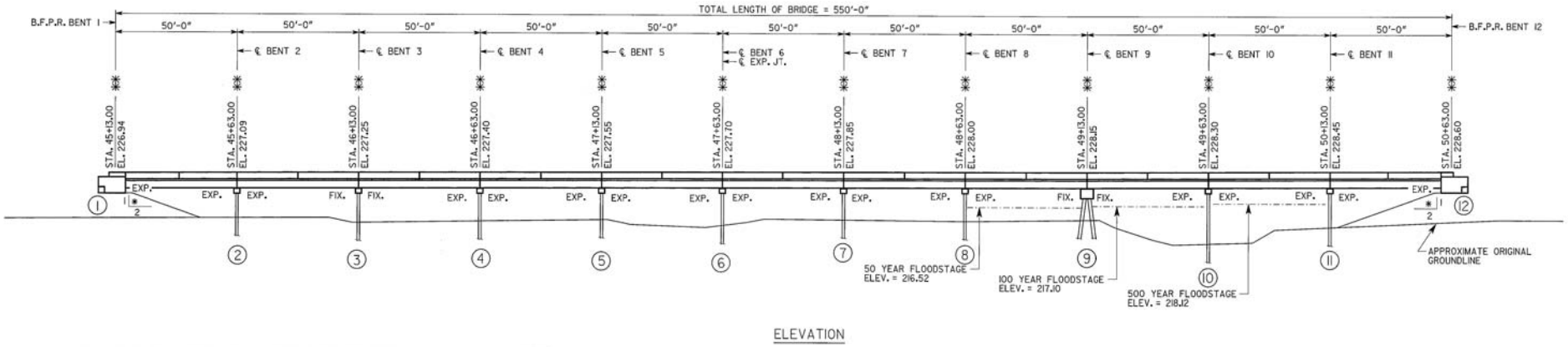

B-1.0 Original Design
3 of 7

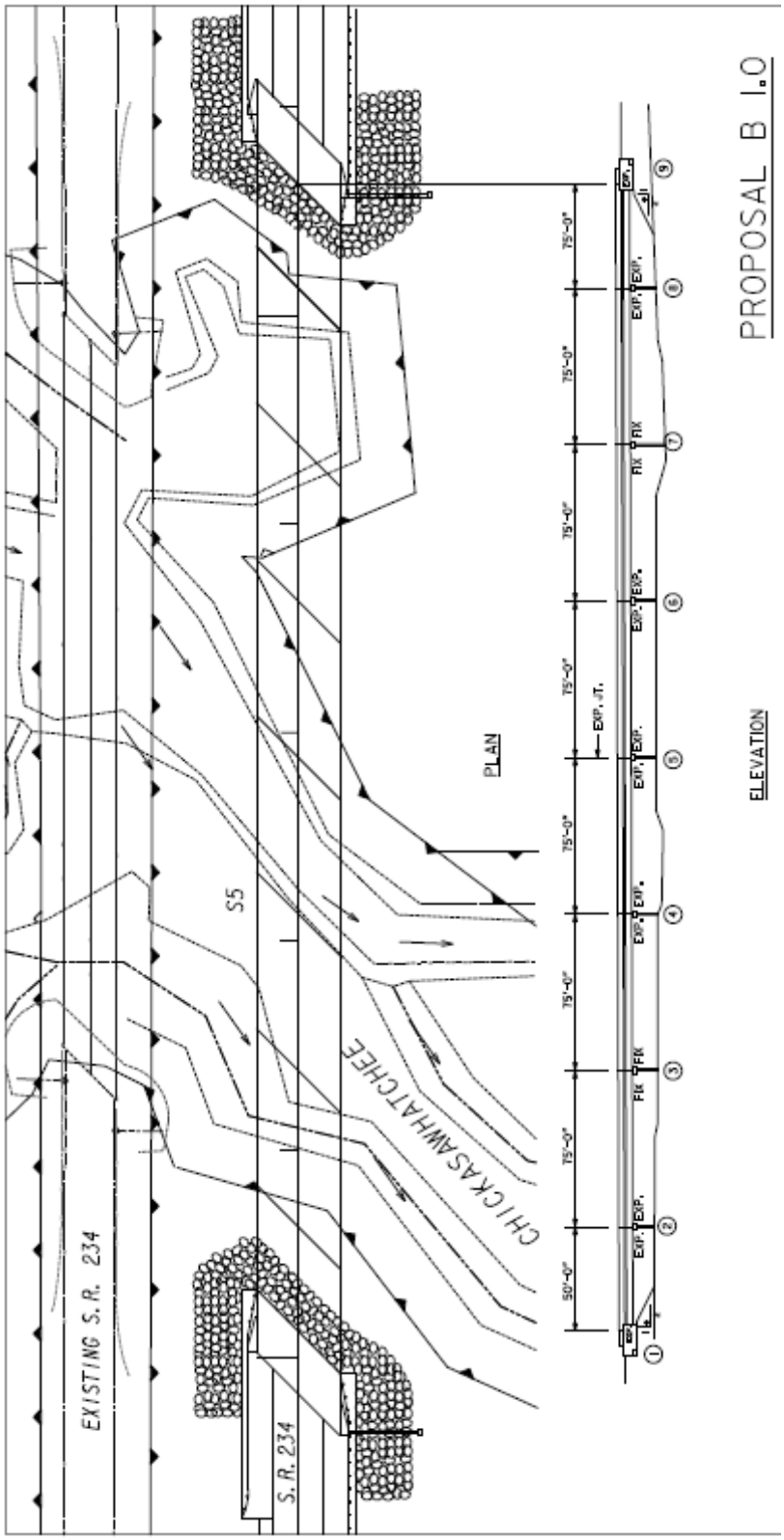

B-1.0 Proposed Change
4 of 7

CALCULATIONS

PROPOSAL NUMBER:	B-1.0	PAGE NUMBER:	5 of 7

PROJECT #/PI #:	BRST0-0524-00(009) / 442951-

Pile Lengths

Original

End Bents, 16" pile	650	LF	10 Piles
Int. Bents, 18" pile	1320	LF	55 Piles

BR-1.0 Proposed Change

Bent	Top	Tip	Length	# Piles	Total L
2	221	190	31	5	155
3	221	190	31	5	155
4	221.5	193	28.5	5	142.5
5	221.5	193	28.5	5	142.5
6	221.5	192	29.5	5	147.5
7	222	192	30	5	150
8	222	192	30	5	150
				Total	**1043** LF

CALCULATIONS

PROPOSAL NUMBER:	B-1.0	PAGE NUMBER:	6 of 7

PROJECT #/PI #:	BRST0-0524-00(009) / 442951-

Original **Design**

Beams		#/Span	Length	# Spans	$/LF	L total	$ total
TII		5	48.22	11	85	2652.1	$225,429
	Pile	#/bent	Length	# Bents	$/LF	L Total	$ Total
	16				50	650	$32,500
	18				60	1320	$79,200
				#	$/EA		$ Total
Test Pile	16			1	6650		$6,650
	18			2	6700		$13,400
			Length EA	#	$/LF		$ Total
Pilot Holes			20	20	215	400	$86,000
Concrete		CY/Bent		#	Total CY	$/CY	$ Total
end bent		22.3		2	44.6		
pile bent		18		9	162		
tower bent		23.5		1	23.5		
Total					230.1	552.92	$127,227
Steel		Lb/Bent		#	Total Lbs	$/CY	$ Total
end bent		2773		2	5546		
pile bent		1571		9	14139		
tower bent		2675		1	2675		
Total					22360	0.7	$15,652
						Total	**$586,057**

CALCULATIONS

PROPOSAL NUMBER:	B-1.0	PAGE NUMBER:	7 of 7

PROJECT #/PI #:	BRST0-0524-00(009) / 442951-

Proposed **Change**

Beams	#/Span	Length	# Spans	$/LF	L total	$ total
TII	5	48.22	2	85	482.2	$40,987
TIII	5	73.25	6	110	2197.5	$241,725

Pile	#/bent	Length	# Bents	$/LF	L Total	$ Total
16				50	650	$32,500
24				80	1043	$83,440

			#	$/EA		$ Total
Test Pile	16		1	6650		$6,650
	24		2	6900		$13,800

		Length EA	#	$/LF		$ Total
Pilot Holes		20	10	215	200	$43,000

Concrete	CY/Bent	#	Total CY	$/CY	$ Total
end bent	22.3	2	44.6		
pile bent	18	7	126		
tower bent	23.5		0		
Total			170.6	552.92	$94,328

Steel	Lb/Bent	#	Total Lbs	$/CY	$ Total
end bent	2773	2	5546		
pile bent	1571	7	10997		
tower bent	2675		0		
Total			16543	0.7	$11,580
Reduction in construction overhead - 1 month @ $20,000/month OH					($20,000)
				Total	**$548,010**

VALUE ENGINEERING PROPOSAL

PROPOSAL NUMBER:	B-1.1	PAGE NUMBER:	1 of 7

PROJECT #/PI #:	**BRST0-0524-00(009) / 442951-**
PROJECT TITLE:	**SR 234 over Chickasawhatchee Creek, Calhoun/Dougherty**

PROPOSAL DESCRIPTION: INCREASE SPAN LENGTHS ON BRIDGE USING BT-54 GIRDERS AND USE 5-SPAN BRIDGE @ 110' IN LIEU OF 11 SPANS @ 50' USING TYPE II PSC GIRDERS.

ORIGINAL DESIGN: The current design of the 550' long bridge over Chickasawhatchee Creek on this project consists of 11 - 50' Type II PSC beam spans utilizing girders at 8'-9" spacing (5 girders per span), with 2 - PSC Pile End Bents and 10 - PSC Pile Intermediate Bents.

PROPOSED CHANGE: It is proposed to utilize 54" Bulb-Tee PSC beams to increase the span lengths while maintaining the same beam spacing and number of beams per span. 5 – 110' spans will achieve the required 550' length (5 spans/4 intermediate bents).

JUSTIFICATION: The increase in span lengths is justified by reducing the number of substructure units required, a reduction of 6 bents on this bridge. Due to the presence of federally protected wildlife and critical habitat at this bridge crossing, impacts from substructure construction are a major concern. The completed BFI for this project recommends PSC pile bents, though not typically used for spans of this length, may be feasible using tower bents. (Construction of concrete bents would increase environmental impacts, so will not be considered.) The hydraulic study shows that there is adequate clearance to accommodate the increase in structure depth this change will require. This proposal does require a minimal cost increase to the project; however it reduces construction time by 2 to 3 months.

ADVANTAGES:

- Reduces permanent stream impacts with less piles and bents
- Reduces environmental impacts during construction
- Shortens construction time by 2-3 months

DISADVANTAGES:

- Requires larger piles
- Results in minimal cost increase

	INITIAL COST	OPERATING COST	TOTAL LIFE-CYCLE COST
ORIGINAL DESIGN:	$ 586,057		$ 586,057
PROPOSED CHANGE:	$ 586,302		$ 586,302
SAVINGS:	$ (245)		$ (245)

COST ESTIMATING WORKSHEET

PROPOSAL NUMBER:	B-1.1	PAGE NUMBER:	2 of 7

PROJECT #/PI #:	BRST0-0524-00(009) / 442951-

ORIGINAL DESIGN

ITEM	SOURCE CODE	U/M	QTY	UNIT COST	TOTAL COST
11-Span Bridge using Type II PSC (see calcs)	7				586,057
SUBTOTAL – COST TO PRIME					586,057
MARKUP				Incl.	--
TOTAL CONTRACT COST					**586,057**

PROPOSED CHANGE

ITEM	SOURCE CODE	U/M	QTY	UNIT COST	TOTAL COST
5-Span Bridge using BT-54 (see calcs)	7				586,302
SUBTOTAL – COST TO PRIME					586,302
MARKUP				Incl.	--
TOTAL CONTRACT COST					**586,302**

Difference [Original-Proposed] **(245)**

SOURCES

1. Project Cost Estimate
2. USC Estimate Database
3. GDOT Item Mean Summary
4. Means Estimating Manual
5. Richardson's Estimating Manual
6. Vendor (Specify)
7. Other (See calcs)

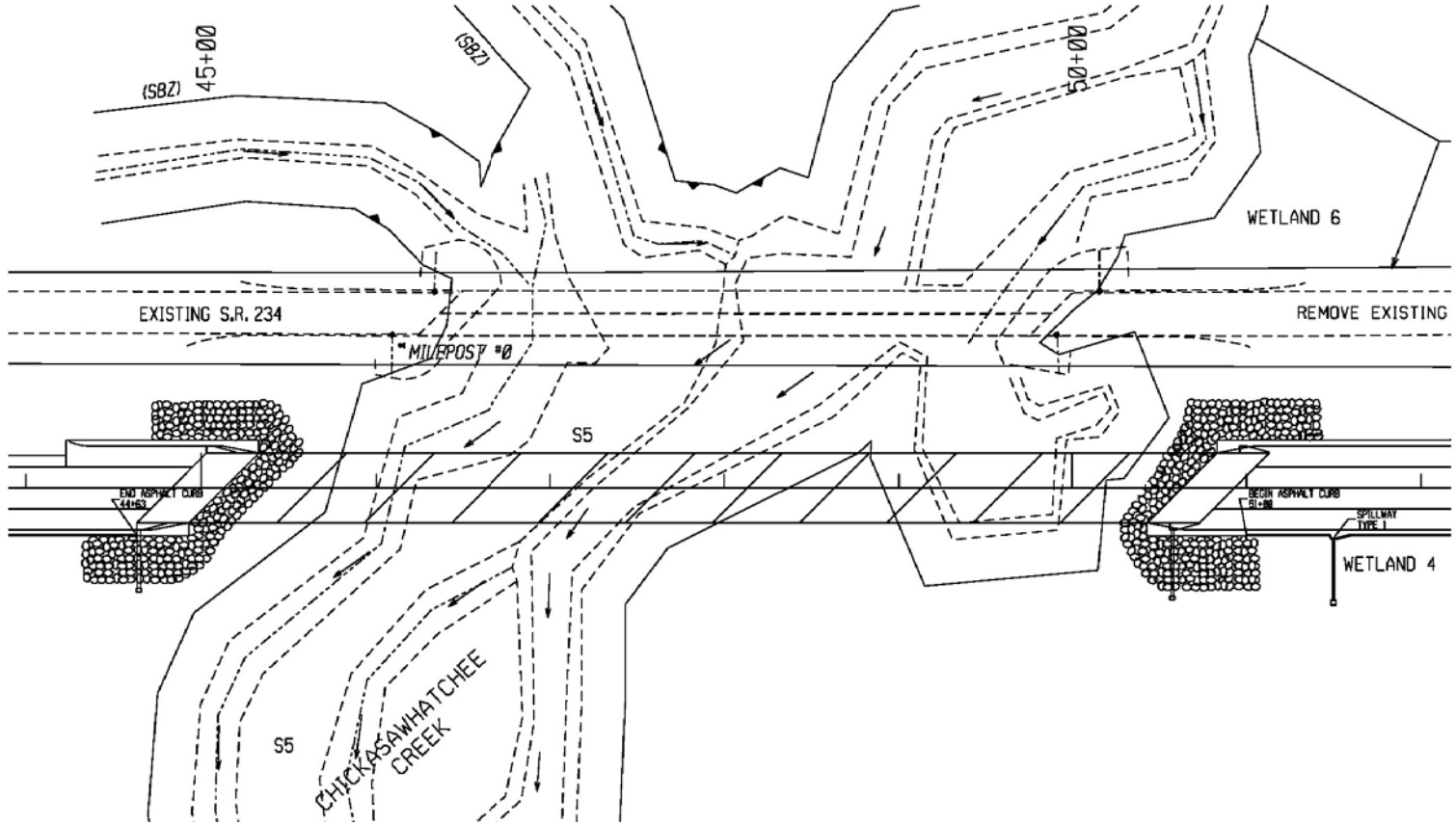

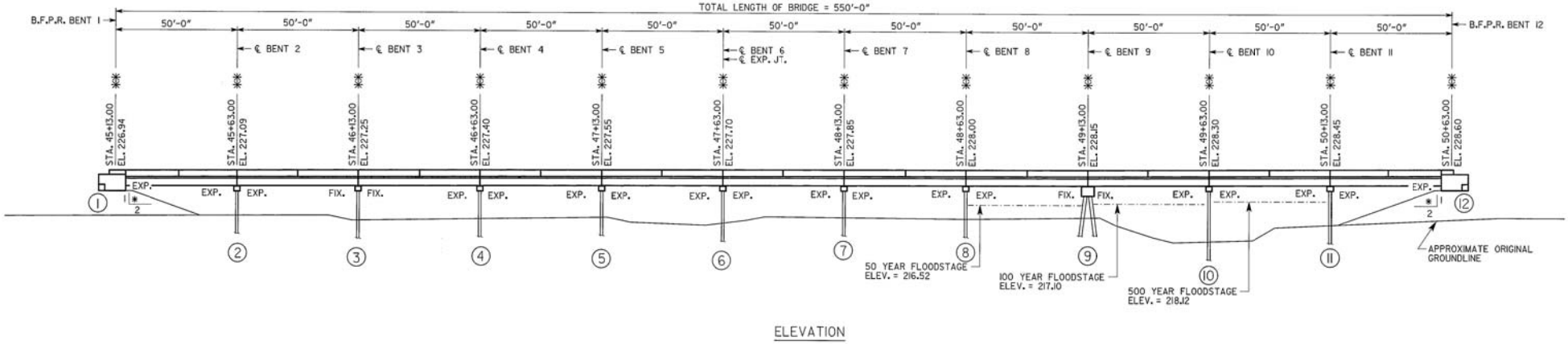

B-1.1 Original Design
3 of 7

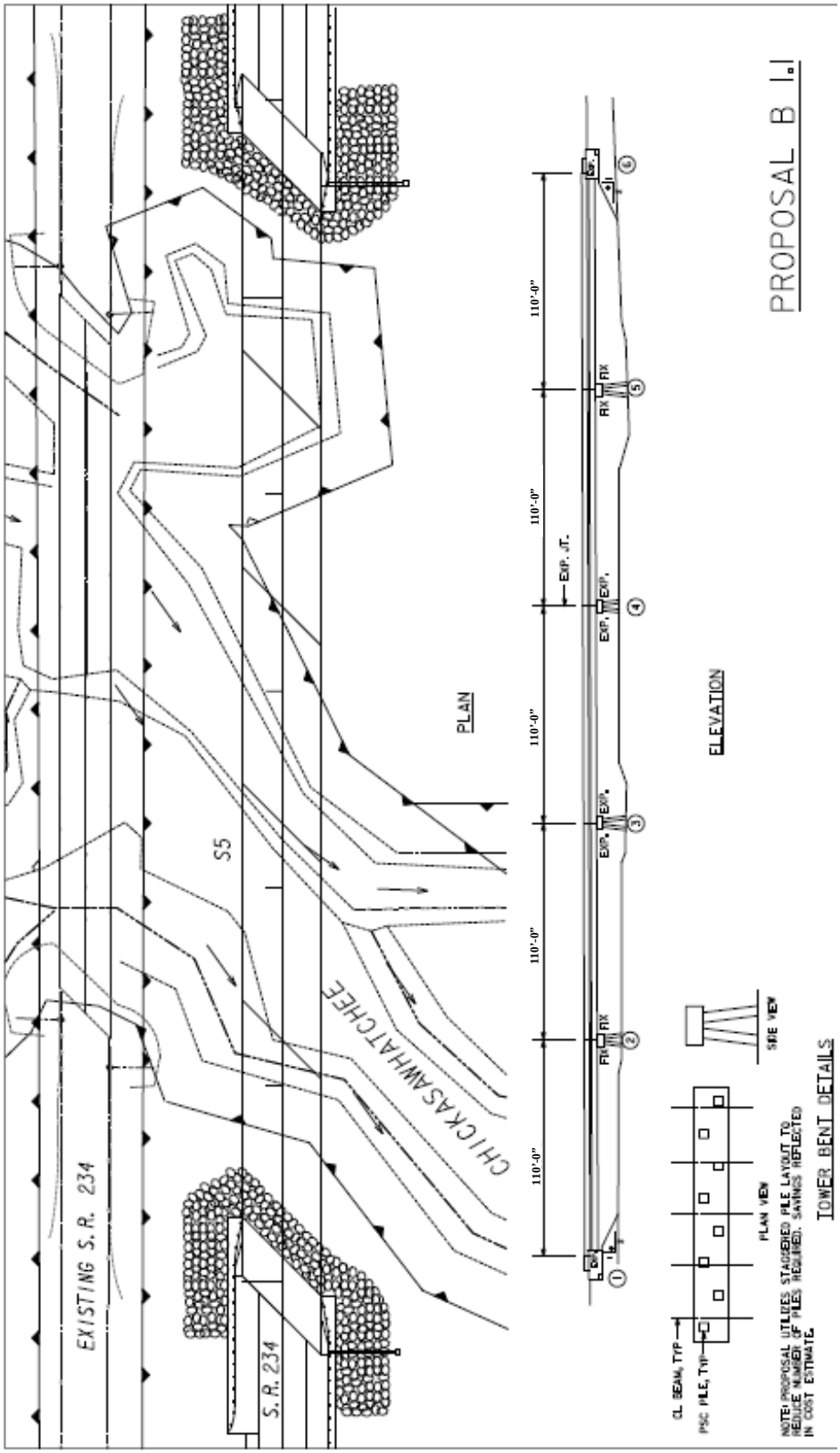

B-1.1 Proposed Change
4 of 7

CALCULATIONS

PROPOSAL NUMBER:	B-1.1	PAGE NUMBER:	5 of 7

PROJECT #/PI #:	BRST0-0524-00(009) / 442951-

Pile Lengths

Original

End Bents, 16" pile	650	LF	10 Piles
Int. Bents, 18" pile	1320	LF	55 Piles

BR-1.1 Proposed Change

Bent	Top	Tip	Length	# Piles	Total L
2	220.5	190	30.5	8	244
3	221	190	31	8	248
4	221	193	28	8	224
5	221.5	193	28.5	8	228
				Total	**944** LF

CALCULATIONS

PROPOSAL NUMBER:	B-1.1	PAGE NUMBER:	6 of 7

PROJECT #/PI #:	BRST0-0524-00(009) / 442951-

Original **Design**

Beams		#/Span	Length	# Spans	$/LF	L total	$ total
	TII	5	48.22	11	85	2652.1	$225,429
	TIII				110	0	$0

	Pile	#/bent	Length	# Bents	$/LF	L Total	$ Total
	16				50	650	$32,500
	18				60	1320	$79,200
	20				70		$0
	24				80		$0

			#	$/EA	$ Total
Test Pile	16		1	6650	$6,650
	18		2	6700	$13,400
	20			6800	$0
	24			6900	$0

		Length EA	#	$/LF		$ Total
Pilot Holes		20	20	215	400	$86,000

Concrete	CY/Bent	#	Total CY	$/CY	$ Total
end bent	22.3	2	44.6		
pile bent	18	9	162		
tower bent	23.5	1	23.5		
Total			230.1	552.92	$127,227

Steel	Lb/Bent	#	Total Lbs	$/CY	$ Total
end bent	2773	2	5546		
pile bent	1571	9	14139		
tower bent	2675	1	2675		
Total			22360	0.7	$15,652
				Total	**$586,057**

CALCULATIONS

PROPOSAL NUMBER:	B-1.1	PAGE NUMBER:	7 of 7

PROJECT #/PI #:	BRST0-0524-00(009) / 442951-

Proposed **Change**

Beams		#/Span	Length	# Spans	$/LF	L total	$ total
	BT 53	5	108.25	5	140	2706.25	$378,875

Pile		#/bent	Length	# Bents	$/LF	L Total	$ Total
	18				60	650	$39,000
	24				80	944	$75,520

Test Pile				#	$/EA		$ Total
	18			1	6700		$6,700
	24			2	6900		$13,800

			Length EA	#	$/LF		$ Total
Pilot Holes			20	8	215	160	$34,400

Concrete		CY/Bent		#	Total CY	$/CY	$ Total
end bent		22.3		2	44.6		
tower bent		23.5		4	94		
Total					138.6	552.92	$76,635

Steel		Lb/Bent		#	Total Lbs	$/CY	$ Total
end bent		2773		2	5546		
tower bent		2675		4	10700		
Total					16246	0.7	$11,372
Reduction in construction overhead - 2.5 months @ $20,000/month OH							($50,000)
						Total	**$586,302**

VALUE ENGINEERING PROPOSAL

PROPOSAL NUMBER:	B-1.2	PAGE NUMBER:	1 of 7

PROJECT #/PI #:	**BRST0-0524-00(009) / 442951-**
PROJECT TITLE:	**SR 234 over Chickasawhatchee Creek, Calhoun/Dougherty**

PROPOSAL DESCRIPTION: INCREASE SPAN LENGTHS ON BRIDGE USING FLORIDA I-BEAM (FIB) GIRDERS AND USE 3-SPAN BRIDGE @ 183' IN LIEU OF 11 SPANS @ 50' USING TYPE II PSC GIRDERS.

ORIGINAL DESIGN: The current design of the 550' long bridge over Chickasawhatchee Creek on this project consists of 11 - 50' Type II PSC beam spans utilizing girders at 8'-9" spacing (5 girders per span), with 2 - PSC Pile End Bents and 10 - PSC Pile Intermediate Bents.

PROPOSED CHANGE: It is proposed to utilize 84" Florida I-Beams (FIB) to increase the span lengths while maintaining the same beam spacing and number of beams per span. 3 – 183' spans will achieve the required 550' length (3 spans/2 intermediate bents). In order to support these longer spans while avoiding the environmental impacts of typical concrete bents, a pedestal bent will be required. This entails constructing a pile supported concrete footing above the ground line and/or water line rather than excavating and constructing the footing below grade (see sketch).

JUSTIFICATION: The increase in span lengths is justified by reducing the number of substructure units required, a reduction of 8 bents on this bridge. Due to the presence of federally protected wildlife and critical habitat at this bridge crossing, impacts from substructure construction are a major concern. Though the BFI for this project recommends PSC pile bents, they will not be adequate for spans of this length and a pile pedestal bent will be required The hydraulic study shows that there is adequate clearance to accommodate the increase in structure depth this change will require. This proposal does require a cost increase to the project; however, it does reduce the construction schedule by approximately 2 months.

ADVANTAGES:

- Reduces permanent stream impacts with less piles and bents
- Reduces environmental impacts during construction
- Shortens construction time by 2 months

DISADVANTAGES:

- Results in cost increase
- Uses non-standard GDOT bridge elements

	INITIAL COST	OPERATING COST	TOTAL LIFE-CYCLE COST
ORIGINAL DESIGN:	$ 586,057		$ 586,057
PROPOSED CHANGE:	$ 1,076,936		$ 1,076,936
SAVINGS:	$ (490,879)		$ (490,879)

COST ESTIMATING WORKSHEET

PROPOSAL NUMBER:	B-1.2	PAGE NUMBER:	2 of 7

PROJECT #/PI #:	BRST0-0524-00(009) / 442951-

ORIGINAL DESIGN

ITEM	SOURCE CODE	U/M	QTY	UNIT COST	TOTAL COST
11-Span Bridge Using Type II PSC (see calcs)	7				586,057
SUBTOTAL – COST TO PRIME					586,057
MARKUP				Incl.	--
TOTAL CONTRACT COST					**586,057**

PROPOSED CHANGE

ITEM	SOURCE CODE	U/M	QTY	UNIT COST	TOTAL COST
5-Span Bridge using FIB 84 (see calcs)	7				1,076,936
SUBTOTAL – COST TO PRIME					1,076,936
MARKUP				Incl.	--
TOTAL CONTRACT COST					**1,076,936**

Difference [Original-Proposed] **(490,879)**

SOURCES

1. Project Cost Estimate
2. USC Estimate Database
3. GDOT Item Mean Summary
4. Means Estimating Manual
5. Richardson's Estimating Manual
6. Vendor (Specify)
7. Other (Specify)

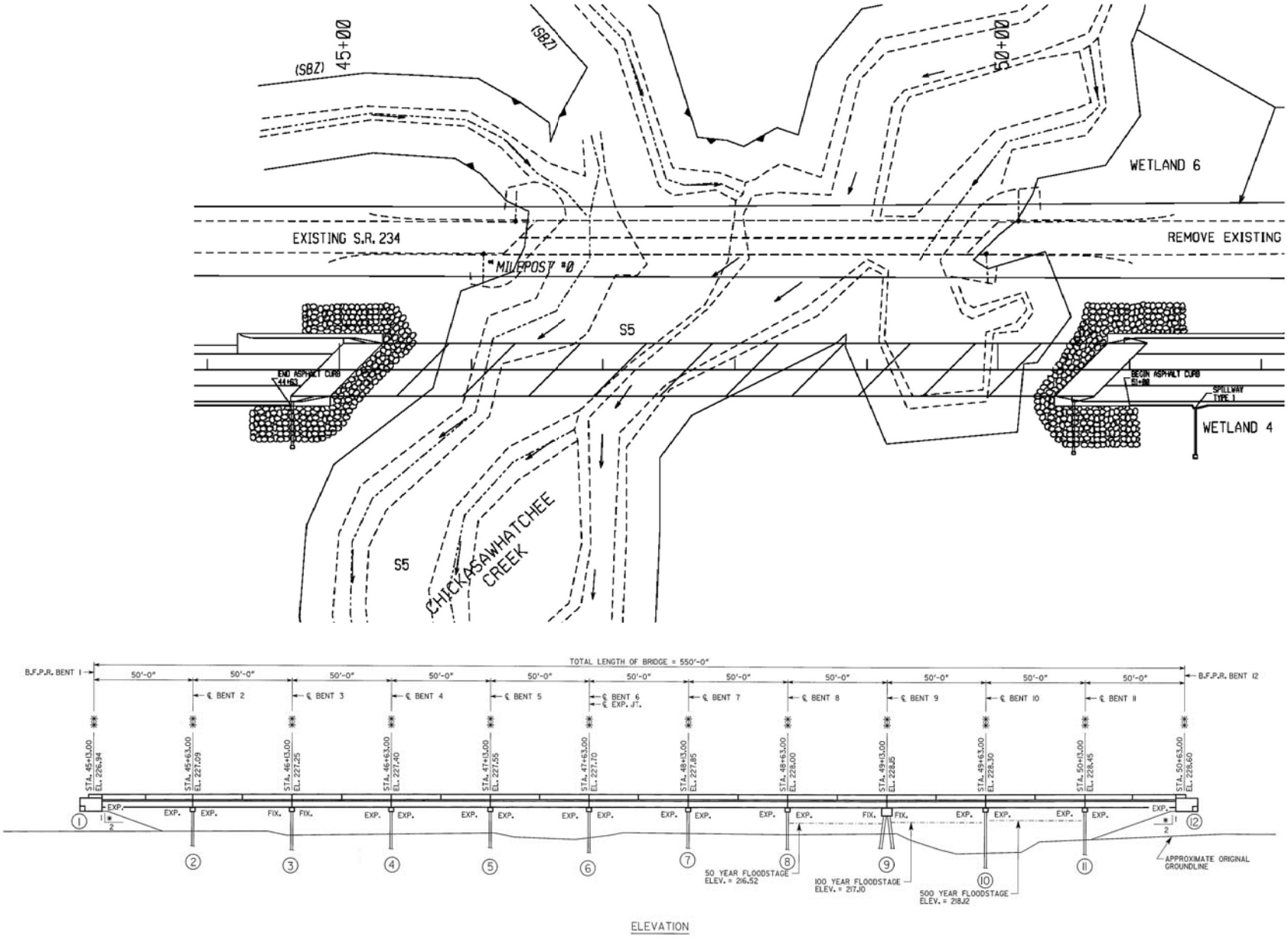

B-1.2 Original Design
3 of 7

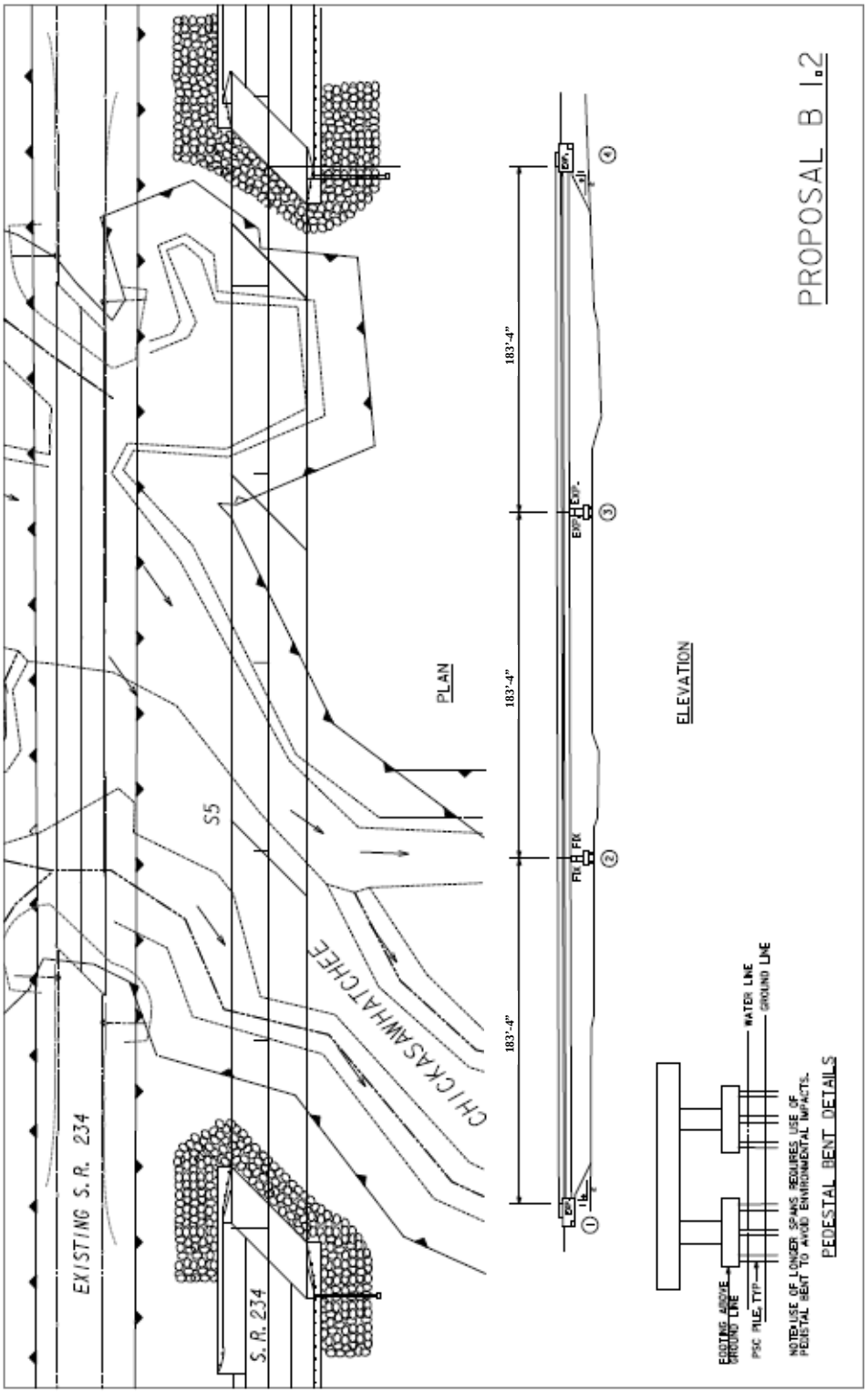

B-1.2 Proposed Change
4 of 7

CALCULATIONS

PROPOSAL NUMBER:	B-1.2	PAGE NUMBER:	5 of 7

PROJECT #/PI #:	BRST0-0524-00(009) / 442951-

Pile Lengths

Original

End Bents, 16" pile	650	LF	10 Piles
Int. Bents, 18" pile	1320	LF	55 Piles

BR-1.2 Proposed Change

Bent	Top	Tip	Length	# Piles	Total L
2	216	190	26	9	234
3	216	190	26	9	234
			Total		**468** LF

CALCULATIONS

PROPOSAL NUMBER:	B-1.2	PAGE NUMBER:	6 of 7

PROJECT #/PI #:	BRST0-0524-00(009) / 442951-

Original **Design**

Beams		#/Span	Length	# Spans	$/LF	L total	$ total
	TII	5	48.22	11	85	2652.1	$225,429
	TIII				110	0	$0

	Pile	#/bent	Length	# Bents	$/LF	L Total	$ Total
	16				50	650	$32,500
	18				60	1320	$79,200
	20				70		$0
	24				80		$0

				#	$/EA		$ Total
Test Pile	16			1	6650		$6,650
	18			2	6700		$13,400
	20				6800		$0
	24				6900		$0

			Length EA	#	$/LF		$ Total
Pilot Holes			20	20	215	400	$86,000

Concrete	CY/Bent	#	Total CY	$/CY	$ Total
end bent	22.3	2	44.6		
pile bent	18	9	162		
tower bent	23.5	1	23.5		
Total			230.1	552.92	$127,227

Steel	Lb/Bent	#	Total Lbs	$/CY	$ Total
end bent	2773	2	5546		
pile bent	1571	9	14139		
tower bent	2675	1	2675		
Total			22360	0.7	$15,652
				Total	**$586,057**

CALCULATIONS

PROPOSAL NUMBER:	B-1.2	PAGE NUMBER:	7 of 7

PROJECT #/PI #:	BRST0-0524-00(009) / 442951-

Proposed **Change**

Beams		#/Span	Length	# Spans	$/LF	L total	$ total
	FIB 84	5	181.5	3	320	2722.5	$871,200

Note: Price from FDOT bid tab information

Pile		#/bent	Length	# Bents	$/LF	L Total	$ Total
	18				60	650	$39,000
	20				70	468	$32,760

Test Pile				#	$/EA		$ Total
	18			1	6700		$6,700
	20			1	6800		$6,800

			Length EA	#	$/LF		$ Total
Pilot Holes			20	9	215	180	$38,700

Concrete		CY/Bent		#	Total CY	$/CY	$ Total
end bent		22.3		2	44.6		
Pedistal Bent		40		2	80		
Total					124.6	552.92	$68,894

Steel		Lb/Bent		#	Total Lbs	$/CY	$ Total
end bent		2773		2	5546		
Pedistal Bent		10000		7	70000		
Total					75546	0.7	$52,882
Reduction in construction overhead - 2 months @ $20,000/month OH							($40,000)
						Total	**$1,076,936**

VALUE ENGINEERING PROPOSAL

PROPOSAL NUMBER:	B-4.0	PAGE NUMBER:	1 of 6

PROJECT #/PI #:	**BRST0-0524-00(009) / 442951-**
PROJECT TITLE:	**SR 234 over Chickasawhatchee Creek, Calhoun/Dougherty**

PROPOSAL DESCRIPTION: USE 4,000 PSI CONCRETE FOR BRIDGE DECK DESIGN IN LIEU OF 3,500 PSI AND REDUCE THICKNESS.

ORIGINAL DESIGN: The current design utilizes 3,500 PSI concrete for the bridge deck design, which results in a specified deck thickness of 7-7/8".

PROPOSED CHANGE: It is proposed to utilize 4,000 PSI concrete for the bridge deck design, allowing a reduction in bridge deck thickness from 7-7/8" to 7-1/2".

JUSTIFICATION: The department has recently developed a specification for 4,000 PSI concrete for use on bridge superstructures. Utilizing higher strength concrete allows the deck to be made thinner, and provides for better durability. The thinner deck also reduces load on the beams and substructure, allowing possible cost reduction in these elements as well.

ADVANTAGES:
- Reduces costs
- Increases durability
- May reduce beams and substructure

DISADVANTAGES:
- None apparent

	INITIAL COST	OPERATING COST	TOTAL LIFE-CYCLE COST
ORIGINAL DESIGN:	$ 736,077		$ 736,077
PROPOSED CHANGE:	$ 719,115		$ 719,115
SAVINGS:	$ 16,962		$ 16,962

COST ESTIMATING WORKSHEET

PROPOSAL NUMBER:	B-4.0	PAGE NUMBER:	2 of 6

PROJECT #/PI #:	BRST0-0524-00(009) / 442951-

ORIGINAL DESIGN

ITEM	SOURCE CODE	U/M	QTY	UNIT COST	TOTAL COST
Superstructure Concrete	1	CY	746	799	596,000
Superstructure Steel	1	LB	200110	0.70	140,077
SUBTOTAL – COST TO PRIME					736,077
MARKUP				Incl.	--
TOTAL CONTRACT COST					**736,077**

PROPOSED CHANGE

ITEM	SOURCE CODE	U/M	QTY	UNIT COST	TOTAL COST
Superstructure Concrete	1	CY	718.5	799	574,081
Superstructure Steel	1	LB	207,191	0.70	145,034
SUBTOTAL – COST TO PRIME					719,115
MARKUP				Incl.	--
TOTAL CONTRACT COST					**719,115**

Difference [Original-Proposed] **16,962**

SOURCES

1. Project Cost Estimate
2. USC Estimate Database
3. GDOT Item Mean Summary
4. Means Estimating Manual
5. Richardson's Estimating Manual
6. Vendor (Specify)
7. Other (Specify)

ORIGINAL DESIGN SKETCH/DETAIL

PROPOSAL NUMBER:	B-4.0	PAGE NUMBER:	3 of 6

PROJECT #/PI #:	BRST0-0524-00(009) / 442951-

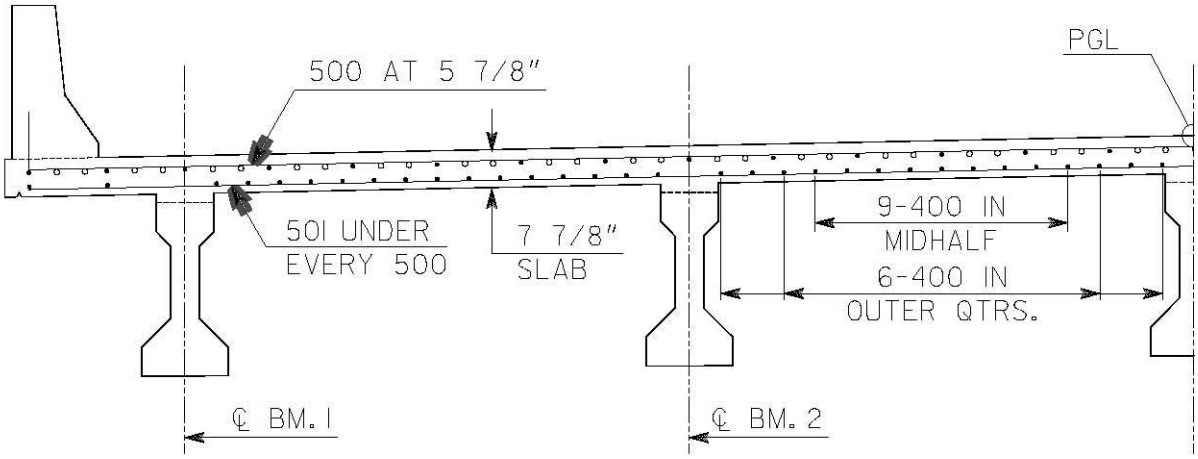

TYPICAL DECK SECTION - ORIGINAL DESIGN

PROPOSED CHANGE SKETCH/DETAIL

PROPOSAL NUMBER:	B-4.0	PAGE NUMBER:	4 of 6

PROJECT #/PI #:	BRST0-0524-00(009) / 442951-

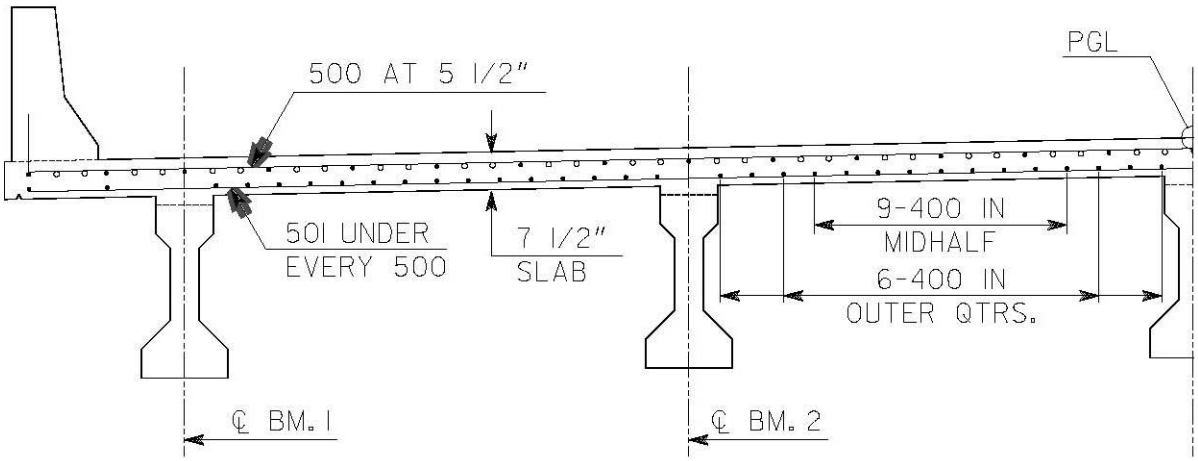

TYPICAL DECK SECTION - PROPOSED DESIGN

CALCULATIONS

PROPOSAL NUMBER:	B-4.0	PAGE NUMBER:	5 of 6

PROJECT #/PI #:	BRST0-0524-00(009) / 442951-

Original Design 3500 PSI Concrete:
Deck Design: 7 7/8" slab, #5 @ 5 7/8" main steel, 9 mid and 6 outer distribution steel
From GDOT BRSLAB07 design program:

```
                SERVICE LOAD DESIGN OF BRIDGE SLAB
                   Minimum slab thickness is 7"
             Maximum main reinforcement spacing is 9"

              Georgia Department of Transportation    22-MAY-12
             Office of Bridge and Structural Design    16:25:20
                              May 2007
==============================================================
  WHEEL                            SLAB    FUTURE   CONTINUITY
  LOAD     fc       fs      n    COVER   PAVING     FACTOR
 (Kips)   (ksi)    (ksi)         (in)  (kips/ft^2)
  16.00    1.400   24.000   9    2.250    0.030       0.8
==============================================================
                                                DISTRIBUTION
EFFECTIVE                          SIZE AND     REINFORCEMENT
  SPAN     SLAB THICKNESS  SPACING OF MAIN  MIDDLE  OUTER
 LENGTH    MINIMUM ACTUAL   REINFORCEMENT    HALF  QUARTERS
 (ft-in)    (in)    (in)             (in)

   7- 9     7.7953  7.875    # 5 at  5.875   9-# 4   6-# 4
```

Quantities (provided):
Superstructure Concrete – 746 CY
Superstructure Steel – 200,110 LBS

CALCULATIONS

PROPOSAL NUMBER:	B-4.0	PAGE NUMBER:	6 of 6

PROJECT #/PI #:	BRST0-0524-00(009) / 442951-

Proposed Design, 4000 PSI Concrete:

Deck Design: 7 1/2” slab, #5 @ 5 1/2” main steel, 9 mid and 6 outer distribution steel
From GDOT BRSLAB07 design program:

```
                    SERVICE LOAD DESIGN OF BRIDGE SLAB
                       Minimum slab thickness is 7"
                 Maximum main reinforcement spacing is 9"

                  Georgia Department of Transportation    22-MAY-12
                 Office of Bridge and Structural Design    15:39:59
                              May 2007
==============================================================
  WHEEL                            SLAB    FUTURE   CONTINUITY
  LOAD     fc       fs      n    COVER   PAVING     FACTOR
 (Kips)   (ksi)    (ksi)         (in)  (kips/ft^2)
  16.00    1.600   24.000   8    2.250    0.030       0.8
==============================================================
                                                DISTRIBUTION
EFFECTIVE                        SIZE AND       REINFORCEMENT
  SPAN     SLAB THICKNESS  SPACING OF MAIN  MIDDLE  OUTER
 LENGTH    MINIMUM ACTUAL   REINFORCEMENT    HALF  QUARTERS
 (ft-in)    (in)    (in)             (in)

   7- 9     7.4237  7.500    # 5 at  5.500   9-# 4   6-# 4
```

Quantities:
Concrete – 3/8” reduction in slab thickness.
.375”/12 x 550’ x 43.25’ x 1/27 = 27.5 CY reduction
746 CY – 27.5 CY = 718.5 CY Proposed

Steel, 500 and 501 bars – from existing, 103 each bar per span, 45’-8” and 42’-6” lengths.
50’ span x 12 in/ft x 1/5.5” spacing = 109 spaces, 110 bars per span
110 -103 = 7 additional bars per span
7 bars x 11 spans x (45’-8” + 42’-6”) x 1.043 lbs/ft = 7,081 lb increase
No change in distribution steel.
200,110 + 7,081 = 207,191 lbs Proposed

VALUE ENGINEERING PROPOSAL

PROPOSAL NUMBER:	B-5.0	PAGE NUMBER:	1 of 5

PROJECT #/PI #:	**BRST0-0524-00(009) / 442951-**
PROJECT TITLE:	**SR 234 over Chickasawhatchee Creek, Calhoun/Dougherty**

PROPOSAL DESCRIPTION: INCREASE BEAM SPACING FROM 8'-9" TO 11'-4" AND REDUCE NUMBER OF BEAMS PER SPAN FROM 5 TO 4.

ORIGINAL DESIGN: The current design of the 550' long bridge over Chickasawhatchee Creek on this project consists of 11 - 50' Type II PSC beam spans utilizing girders at 8'-9" spacing (5 girders per span).

PROPOSED CHANGE: It is proposed to increase the beam spacing to 11'-4" and reduce the number of beams to 4 per span. This change would also require an increase in the deck thickness.

JUSTIFICATION: The beam spacing can be increased and still provide adequate support to the bridge structure. Though this beam spacing is larger than typically used by GDOT, it is sometimes used for longer span bridges to reduce the number of beam lines. This beam spacing is obtainable without increasing beam size, based on data available from beam design charts. Fewer beam lines would also require fewer piles for typical pile bent construction, thereby reducing environmental impacts.

ADVANTAGES:

- Reduces costs
- Reduces number of piles
- Reduces temporary construction impacts
- Reduces permanent stream impacts

DISADVANTAGES:

- Exceeds typical beam spacing

	INITIAL COST	OPERATING COST	TOTAL LIFE-CYCLE COST
ORIGINAL DESIGN:	$ 443,179		$ 443,179
PROPOSED CHANGE:	$ 413,771		$ 413,771
SAVINGS:	$ 29,408		$ 29,408

COST ESTIMATING WORKSHEET

PROPOSAL NUMBER:	B-5.0	PAGE NUMBER:	2 of 5

PROJECT #/PI #:	BRST0-0524-00(009) / 442951-

ORIGINAL DESIGN

ITEM	SOURCE CODE	U/M	QTY	UNIT COST	TOTAL COST
Current Design (see calcs.)	7				443,179
SUBTOTAL – COST TO PRIME					443,179
MARKUP				Incl.	--
TOTAL CONTRACT COST					**443,179**

PROPOSED CHANGE

ITEM	SOURCE CODE	U/M	QTY	UNIT COST	TOTAL COST
Proposed Change (see calcs.)	7				413,771
SUBTOTAL – COST TO PRIME					413,771
MARKUP				Incl.	--
TOTAL CONTRACT COST					**413,771**

Difference [Original-Proposed] **29,408**

SOURCES

1. Project Cost Estimate
2. USC Estimate Database
3. GDOT Item Mean Summary
4. Means Estimating Manual
5. Richardson's Estimating Manual
6. Vendor (Specify)
7. Other (See calcs.)

ORIGINAL DESIGN SKETCH/DETAIL

PROPOSAL NUMBER:	B-5.0	PAGE NUMBER:	3 of 5

PROJECT #/PI #:	BRST0-0524-00(009) / 442951-

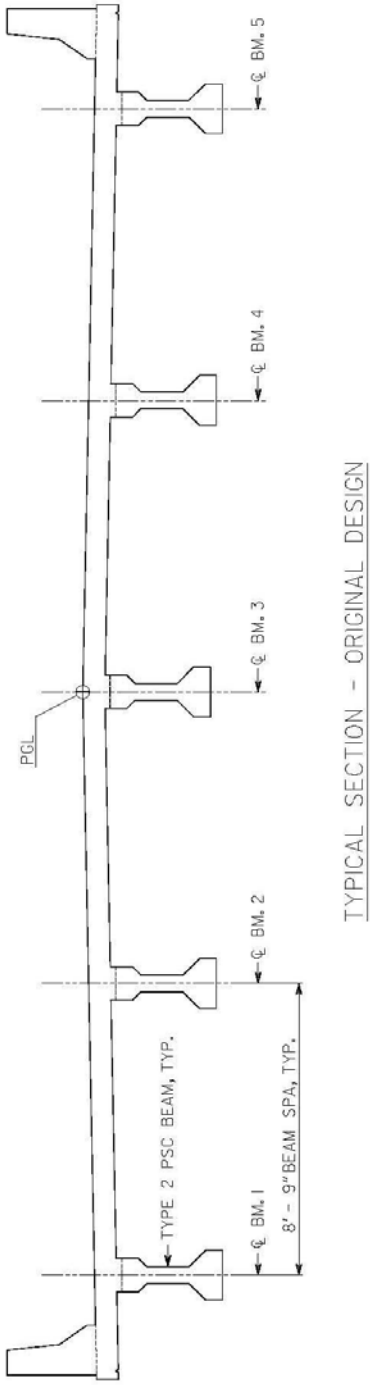

PROPOSED CHANGE SKETCH/DETAIL

PROPOSAL NUMBER:	B-5.0	PAGE NUMBER:	4 of 5

PROJECT #/PI #:	BRST0-0524-00(009) / 442951-

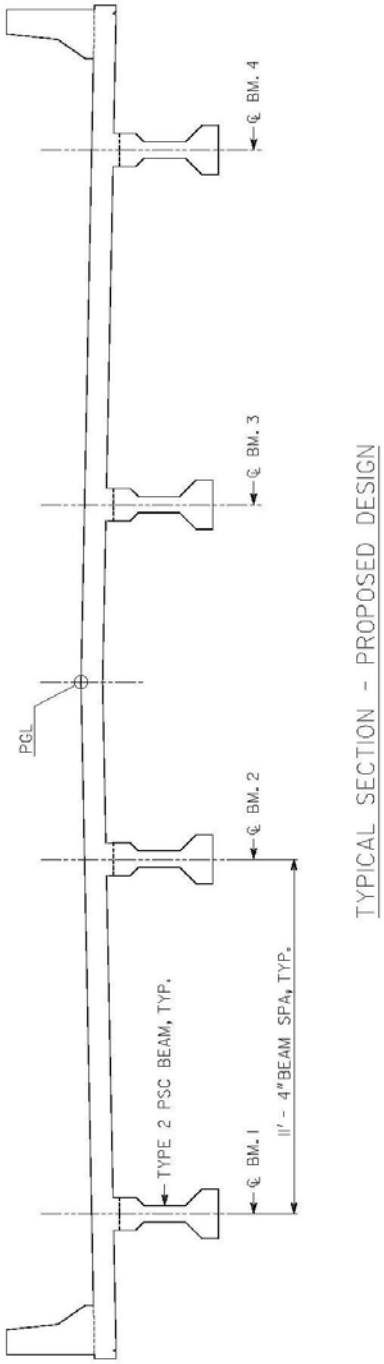

CALCULATIONS

PROPOSAL NUMBER:	B-5.0	PAGE NUMBER:	5 of 5

PROJECT #/PI #:	BRST0-0524-00(009) / 442951-

Original **Design**

Beams		#/Span	Length	# Spans	$/LF	L total	$ total
	TII	5	48.22	11	85	2652.1	$225,429

	Pile	#/bent	Length	# Bents	$/LF	L Total	$ Total
	16				50	650	$32,500
	18				60	1320	$79,200

			#	$/EA		$ Total
Test Pile	16		1	6650		$6,650
	18		2	6700		$13,400

		Length EA	#	$/LF		$ Total
Pilot Holes		20	20	215	400	$86,000
					Total	**$443,179**

Proposed **Change**

Beams		#/Span	Length	# Spans	$/LF	L total	$ total
	TII	4	48.22	11	85	2121.68	$180,343

Pile		#/bent	Length	# Bents	$/LF	L Total	$ Total
	16				50	650	$32,500
	20				70	865	$60,550

			#	$/EA		$ Total
Test Pile	16		1	6650		$6,650
	20		2	6800		$13,600

		Length EA	#	$/LF		$ Total
Pilot Holes		20	16	215	320	$68,800
Additional Deck Concrete		.875"		64.25 CY	$799	$51,328
					Total	**$413,771**

VALUE ENGINEERING PROPOSAL

PROPOSAL NUMBER:	B-6.0	PAGE NUMBER:	1 of 5

PROJECT #/PI #:	**BRST0-0524-00(009) / 442951-**
PROJECT TITLE:	**SR 234 over Chickasawhatchee Creek, Calhoun/Dougherty**

PROPOSAL DESCRIPTION: RE-LOCATE THE LOCATION OF BRIDGE EXPANSION JOINT AND BRIDGE TOWER BENT TO REDUCE THE NUMBER OF PILOT HOLES REQUIRED.

ORIGINAL DESIGN: The current design of the 550' long bridge over Chickasawhatchee Creek on this project consists of 11 - 50' spans requiring 10 - PSC Pile Intermediate Bents. An expansion joint is placed at Bent 6, effectively separating the bridge into a 5 span unit (West end) and a 6 span unit (East end). The 6 span unit apparently requires a tower bent, currently located at Bent 9.

PROPOSED CHANGE: It is proposed to move the expansion joint from Bent 6 to Bent 7 and to relocate the tower bent from Bent 9 to Bent 4.

JUSTIFICATION: This change allows a reduction in the number of pilot holes required for construction of Bent 9. The BFI recommends the use of pilot holes for pile installation at bents 9, 10 and 11. In the current design, Bent 9 is a tower bent requiring 10 piles. By moving the expansion joint, placing the 6 span unit on the West end of the bridge and relocating the tower bent to Bent 4, this proposal allows Bent 9 to be constructed with only 5 piles and 5 pilot holes. This will provide a cost savings to the project. As pilot holes may cause greater disturbance than pile installation without pilot holes, there is also a reduction in environmental impacts during construction.

ADVANTAGES:
- Reduces costs
- Reduces environmental impacts during construction

DISADVANTAGES:
- None apparent

	INITIAL COST	OPERATING COST	TOTAL LIFE-CYCLE COST
ORIGINAL DESIGN:	$ 43,000		$ 43,000
PROPOSED CHANGE:	$ 21,500		$ 21,500
SAVINGS:	$ 21,500		$ 21,500

COST ESTIMATING WORKSHEET

PROPOSAL NUMBER:	B-6.0	PAGE NUMBER:	2 of 5

PROJECT #/PI #:	BRST0-0524-00(009) / 442951-

ORIGINAL DESIGN

ITEM	SOURCE CODE	U/M	QTY	UNIT COST	TOTAL COST
Pilot Holes	1	LF	200	215	43,000
SUBTOTAL – COST TO PRIME					43,000
MARKUP				Incl.	--
TOTAL CONTRACT COST					**43,000**

PROPOSED CHANGE

ITEM	SOURCE CODE	U/M	QTY	UNIT COST	TOTAL COST
Pilot Holes	1	LF	100	215	21,500
SUBTOTAL – COST TO PRIME					21,500
MARKUP				Incl.	--
TOTAL CONTRACT COST					**21,500**

Difference [Original-Proposed] **21,500**

SOURCES

1. Project Cost Estimate
2. USC Estimate Database
3. GDOT Item Mean Summary
4. Means Estimating Manual
5. Richardson's Estimating Manual
6. Vendor (Specify)
7. Other (Specify)

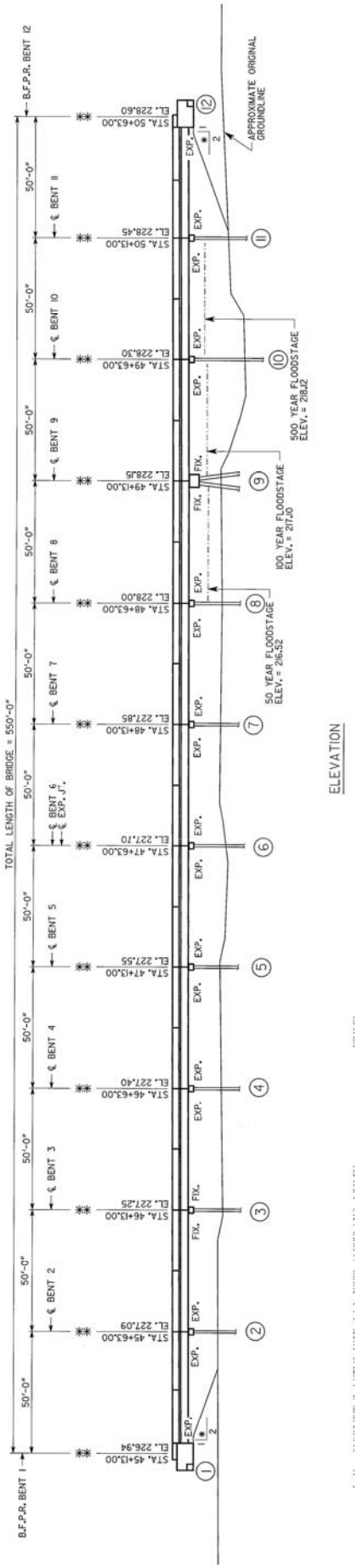

B-6.0 Original Design
3 of 5

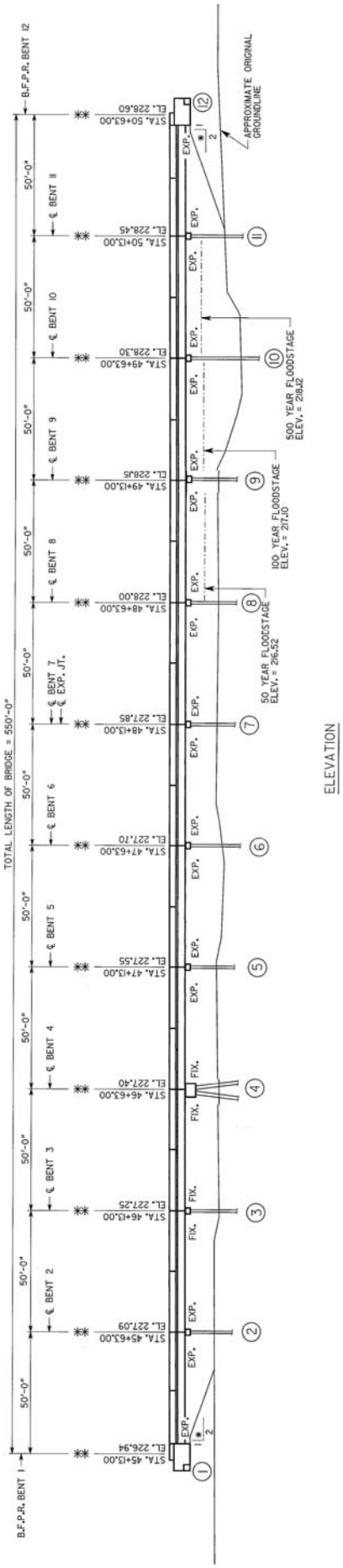

B-6.0 Proposed Change
4 of 5

CALCULATIONS

PROPOSAL NUMBER:	B-6.0	PAGE NUMBER:	5 of 5

PROJECT #/PI #:	BRST0-0524-00(009) / 442951-

Approximate existing ground line – elev 212
Estimated pilot hole tip elevation from BFI – elev 192
Length of pilot hole – 212 - 192 = 20 LF

Original Design:
10 piles x 20 LF = 200 LF pilot hole

Proposed Design:
5 piles x 20 LF = 100 LF pilot hole

VALUE ENGINEERING PROPOSAL

PROPOSAL NUMBER:	R-1.0	PAGE NUMBER:	1 of 7

PROJECT #/PI #:	**BRST0-0524-00(009) / 442951-**
PROJECT TITLE:	**SR 234 over Chickasawhatchee Creek, Calhoun/Dougherty**

PROPOSAL DESCRIPTION: SHIFT HORIZONTAL ALIGNMENT TO 60' OFFSET (CENTERLINE TO CENTERLINE) FROM CURRENT 100'.

ORIGINAL DESIGN: The current design constructs the proposed bridge alignment South of the existing bridge at a 100' offset (centerline to centerline). This design results in 295,781 CY of embankment; 13.73 acres of required right-of-way; and 14.9 acres of wetland impact.

PROPOSED CHANGE: It is proposed to shift the alignment North by 40' and provide a 60'offset (centerline to centerline), resulting in a reduction in overall project footprint, including a minor reduction in roadway length, less earthwork (volume and acreage of disturbance), less right-of-way, and reduced wetland impact. Approximately 25' of separation between the existing and proposed bridge structures would be provided in this concept. The geometry of the original design curves remains the same (radius, etc.). The overall bridge length, the overflow bridge culverts, and other project estimate items would remain as included in the original design.

JUSTIFICATION: Shifting the proposed bridge alignment closer to the existing bridge would provide a reduction in project impacts and cost. The 25' separation between the existing and proposed bridge structures would allow staging for construction of the proposed bridge structure and removal of the existing bridge structure from the same temporary staging area, thus minimizing the work area in and around the existing stream and wetlands.

ADVANTAGES:

- Only one bridge staging area.
- Reduces wetland impacts
- Reduces right-of-way cost
- Reduces grading complete area (lower earthwork volume and less acres of clearing and grubbing)

DISADVANTAGES:

- Reduces separation between existing travel lanes and proposed construction areas

	INITIAL COST	OPERATING COST	TOTAL LIFE-CYCLE COST
ORIGINAL DESIGN:	$ 5,511,560		$ 5,511,560
PROPOSED CHANGE:	$ 4,654,068		$ 4,654,068
SAVINGS:	$ 857,492		$ 857,492

COST ESTIMATING WORKSHEET

PROPOSAL NUMBER:	R-1.0	PAGE NUMBER:	2 of 7

PROJECT #/PI #:	BRST0-0524-00(009) / 442951-

ORIGINAL DESIGN

ITEM	SOURCE CODE	U/M	QTY	UNIT COST	TOTAL COST
Right-of-Way	1	AC	13.73	25,491.00	350,000
Grading Complete	7	AC	24.0	100,148.42	2,405,562
Granular Embankment	1	CY	168,185	9.00	1,513,665
Roadway Full Depth Section	1	SY	14,403.44	46.26	666,303
Paved Shoulder Section	1	SY	4,513.89	13.63	61,524
Wetland Mitigation	7	AC	14.9	24,161.00	360,000
Filter Fabric	1	SY	51,502	3.00	154,506
SUBTOTAL – COST TO PRIME					5,511,560
MARKUP				Incl.	--
TOTAL CONTRACT COST					**5,511,560**

PROPOSED CHANGE

ITEM	SOURCE CODE	U/M	QTY	UNIT COST	TOTAL COST
Right-of-Way	1	AC	9.33	25,491.00	237,831
Grading Complete	7	AC	20.26	100,148.42	2,029,007
Granular Embankment	1	CY	140,185	9.00	1,261,665
Roadway Full Depth Section	1	SY	13,925.68	46.26	644,202
Paved Shoulder Section	1	SY	4,384.5	13.63	59,761
Wetland Mitigation	7	AC	12.6	24,161.00	304,429
Filter Fabric	1	SY	39,058	3.00	117,174
					4,654,068
MARKUP				Incl.	--
TOTAL CONTRACT COST					**4,654,068**

Difference [Original-Proposed] **857,492**

SOURCES

1. Project Cost Estimate
2. USC Estimate Database
3. GDOT Item Mean Summary
4. Means Estimating Manual
5. Richardson's Estimating Manual
6. Vendor (Specify)
7. Other (See Calculations)

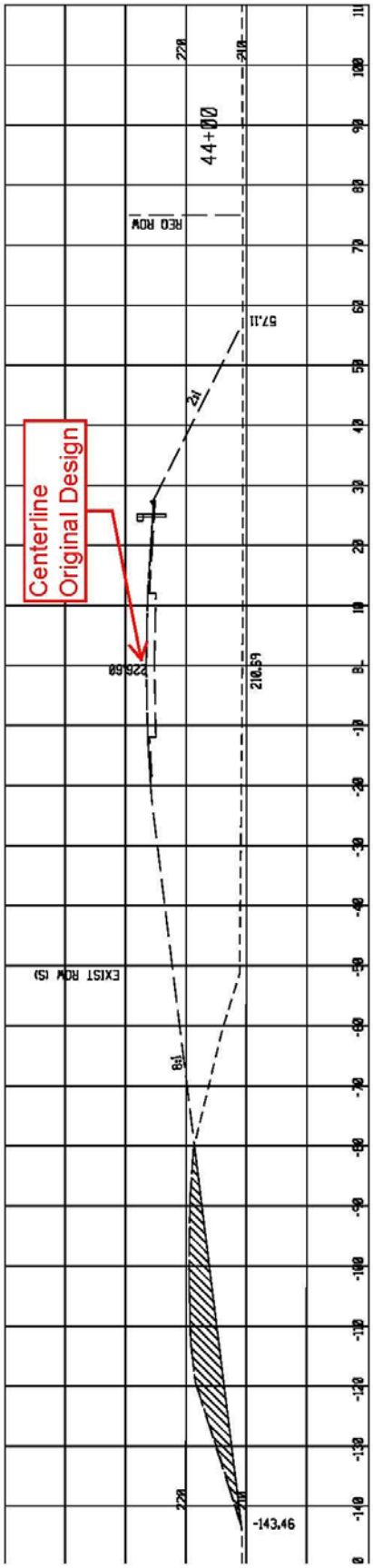

R-1.0 Original Design
3 of 7

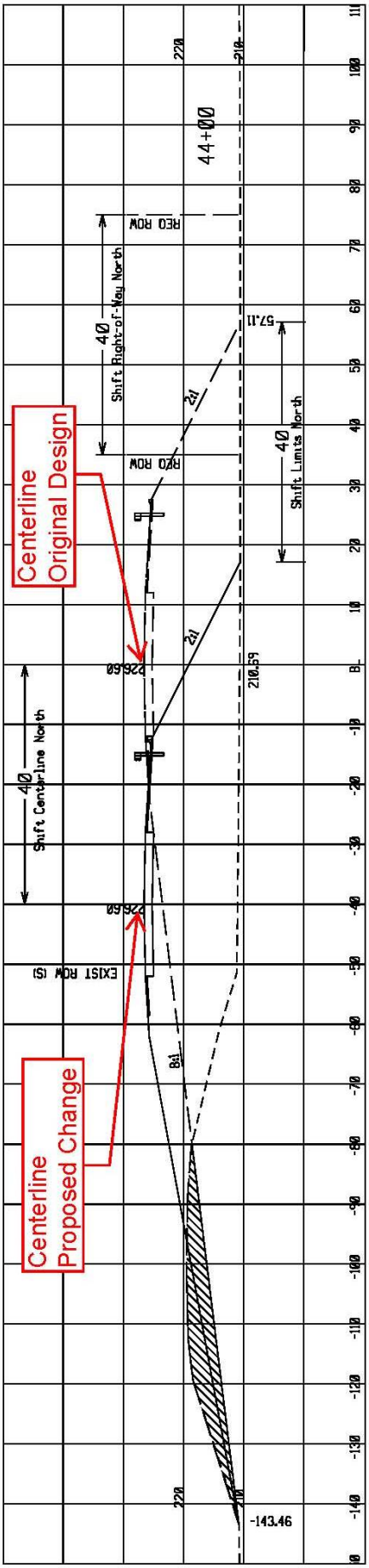

R-1.0 Proposed Change
4 of 7

CALCULATIONS

PROPOSAL NUMBER:	R-1.0	PAGE NUMBER:	5 of 7

PROJECT #/PI #:	BRST0-0524-00(009) / 442951-

Right-of-Way:

- Per June 2011 Preliminary Right-of-Way Cost Estimate 13.73 acres of right-of-way are required at a total cost of $350,000.
- $350,000 / 13.73 acres = $25,491 / acre
- A shift of the alignment 40 FT North would shift the required right-of-way line 40 FT North along the South side of the project; resulting in a 4.4 acre reduction (as measured in MicroStation).
- 13.73 acres – 4.4 acres = 9.33 acres required right-of-way in the proposed change.

Grading Complete:

- The Detailed Cost Estimate includes Grading Complete (earthwork, existing pavement removal, clearing & grubbing) at a total cost of $2,403,562.
- ***Since the details of the unit costs for earthwork, pavement removal and clearing & grubbing were not provided, a per acre cost for grading complete was calculated for the purposes of comparing the original and proposed designs for this idea.***
- The total area of work (including the bridge area) per measurements in the construction limits MicroStation file (442951LIMITS.DGN) is approximately 24.0 acres.
- $2,403,562 / 24.0 acres = $100,148.42 / acre.
- A shift of the alignment 40 FT North would shift the limits of construction 40 FT North along the South side of the project; resulting in a 3.74 acre reduction (as measured in MicroStation).
- 24.0 acres – 3.74 acres = 20.26 acres of grading complete.

Granular Embankment:

- The Detailed Cost Estimate includes a Granular Embankment quantity of 168,185 CY at a $9.00 / CY unit cost and total cost of $1,513,665.
- Based on a review it appears the Detailed Cost Estimate assumes the granular embankment would be placed from Sta 22+00 to 45+00 and Sta 51+00 to 84+00 for a total length of 5,600 LF. Assuming a total average width of 120 FT, the average depth of granular embankment would be 6.75 FT. These assumptions are based on examination of the cross sections as provided for the VE study and by measuring the average difference between the existing ground elevation and 18 inches above the 100-year flood elevation 217.10 FT.
- The granular embankment is assumed to only be required in the limits of the 100-year flood elevation from Sta 32+00 to 66+00 with an exception for the bridge length.
- Sta 32+00 to 45+00 and Sta 51+00 to 66+00 = total length of 2800 LF.
- Assume 40 FT reduction in width.
- 2800 LF length x 40 FT width x 6.75 FT avg. depth = 756,000 CF = 28,000 CY reduction
- 168,185 CY – 28,000 CY = 140,185 CY of granular embankment required.

CALCULATIONS

PROPOSAL NUMBER:	R-1.0	PAGE NUMBER:	6 of 7

PROJECT #/PI #:	BRST0-0524-00(009) / 442951-

Roadway Full Depth Section:

- Per the construction plans it appears that a total of 14,403.44 SY of full depth roadway will be constructed.
- A review of the Detailed Cost Estimate indicates that the Full Depth Pavement would cost $46.26 / SY.
- A shift of the alignment North 40 FT would result in a shift up-station of the Western terminus by 108.26 FT and a shift back-station of the Eastern terminus by 70.90 FT resulting in a total reduction in roadway length by 179.16 FT.
- It is assumed that the overlay limits at the project beginning and ending would remain the same and the reduction in roadway length would be in the full depth pavement section.
- 179.16 FT x 24 FT width = 4,299.84 SF = 477.76 SY reduction in Full Depth Pavement
- 14,403.44 SY – 477.76 SY = 13,925.68 SY Full Depth Pavement

Paved Shoulder Section:

- Per the construction plans it appears that a total of 4,513.89 SY of new shoulder (6.5 FT paved) will be constructed.
- A review of the Detailed Cost Estimate indicates that the new Shoulder Pavement would cost $13.63 / SY.
- A shift of the alignment North 40 FT would result in a shift up-station of the Western terminus by 108.26 FT and a shift back-station of the Eastern terminus by 70.90 FT resulting in a total reduction in roadway length by 179.16 FT.
- It is assumed that the overlay limits at the project beginning and ending sections would remain the same and the reduction in roadway length would result in the same reduction in shoulder length.
- 179.16 FT x 6.5 FT width = 1,164.54 SF = 129.39 SY reduction in Shoulder Pavement
- 4,513.89 SY – 129.39 SY = 4,384.5 SY Shoulder Pavement

Wetland Mitigation:

- Per the Environmental Constraints form 14.9 acres of wetland impact have been calculated.
- Per an email from GDOT (Lisa Westberry) dated 05-21-12, the total cost for the mitigation credits is estimated at $360,000.
- $360,000 / 14.9 acres = $24,161 / acre
- A shift of the alignment North 40 FT would result in a shift the limits of construction and required right-of-way limits North by 40 FT. For the purposes of this estimate, the right-of-way limits are assumed as the limits for calculating the wetland impacts.
- The alignment shift results in 2.3 acres less wetland impacts (as measured in MicroStation).
- 14.9 acres – 2.3 acres = 12.6 acres wetland impact.

CALCULATIONS

PROPOSAL NUMBER:	R-1.0	PAGE NUMBER:	7 of 7

PROJECT #/PI #:	BRST0-0524-00(009) / 442951-

Filter Fabric:

- Detailed cost estimate includes 51,502 SY of Filter Fabric at $3/SY
- Assume 40 FT reduction width
- 2,800 FT length x 40 FT width = 112,000 SF = 12,444 SY
- 51,502 SY – 12,444 SY = 39,058 SY Filter Fabric

VALUE ENGINEERING PROPOSAL

PROPOSAL NUMBER:	R-1.1	PAGE NUMBER:	1 of 7

PROJECT #/PI #:	**BRST0-0524-00(009) / 442951-**
PROJECT TITLE:	**SR 234 over Chickasawhatchee Creek, Calhoun/Dougherty**

PROPOSAL DESCRIPTION: SHIFT HORIZONTAL ALIGNMENT TO 40' OFFSET (CENTERLINE TO CENTERLINE) FROM CURRENT 100'.

ORIGINAL DESIGN: The current design constructs the proposed bridge alignment South of the existing bridge at a 100' offset (centerline to centerline). This design results in 295,781 CY of embankment; 13.73 acres of required right-of-way; and 14.9 acres of wetland impact.

PROPOSED CHANGE: It is proposed to shift the alignment North by 60' and provide a 40'offset (centerline to centerline), resulting in a reduction in overall project footprint, including a minor reduction in roadway length, less earthwork (volume and acreage of disturbance), less right-of-way, and reduced wetland impact. Approximately 5' of separation between the existing and proposed bridge structures would be provided in this concept. The geometry of the original design curves remains the same (radius, etc.). The overall bridge length, the overflow bridge culverts, and other project estimate items would remain as included in the original design.

JUSTIFICATION: Shifting the proposed bridge alignment closer to the existing bridge would provide a reduction in project impacts and cost.

ADVANTAGES:

- Reduces wetland impacts
- Reduces right-of-way cost
- Reduces grading complete area (lower earthwork volume and less acres of clearing and grubbing
- Reduces area of disturbance

DISADVANTAGES:

- Reduces separation between existing travel lanes and proposed construction areas
- Requires multiple bridge construction staging areas.

	INITIAL COST	OPERATING COST	TOTAL LIFE-CYCLE COST
ORIGINAL DESIGN:	$ 5,511,560		$ 5,511,560
PROPOSED CHANGE:	$ 4,222,883		$ 4,222,883
SAVINGS:	$ 1,288,677		$ 1,288,677

COST ESTIMATING WORKSHEET

PROPOSAL NUMBER:	R-1.1	PAGE NUMBER:	2 of 7

PROJECT #/PI #:	BRST0-0524-00(009) / 442951-

ORIGINAL DESIGN

ITEM	SOURCE CODE	U/M	QTY	UNIT COST	TOTAL COST
Right-of-Way	1	AC	13.73	25,491.00	350,000
Grading Complete	7	AC	24.0	100,148.42	2,405,562
Granular Embankment	1	CY	168,185	9.00	1,513,665
Roadway Full Depth Section	1	SY	14,403.44	46.26	666,303
Paved Shoulder Section	1	SY	4,513.89	13.63	61,524
Wetland Mitigation	7	AC	14.9	24,161.00	360,000
Filter Fabric	1	SY	51,502	3.00	154,506
SUBTOTAL – COST TO PRIME					5,511,560
MARKUP				Incl.	--
TOTAL CONTRACT COST					**5,511,560**

PROPOSED CHANGE

ITEM	SOURCE CODE	U/M	QTY	UNIT COST	TOTAL COST
Right-of-Way	1	AC	7.43	25,491.00	189,398
Grading Complete	7	AC	18.3	100,148.42	1,832,716
Granular Embankment	1	CY	126,185	9.00	1,135,665
Roadway Full Depth Section	1	SY	13,683.97	46.26	633,020
Paved Shoulder Section	1	SY	4,319.03	13.63	58,868
Wetland Mitigation	7	AC	11.37	24,161.00	274,711
Filter Fabric	1	SY	32,835	3.00	98,505
SUBTOTAL – COST TO PRIME					4,222,883
MARKUP				Incl.	--
TOTAL CONTRACT COST					**4,222,883**

Difference [Original-Proposed] **1,288,677**

SOURCES

1. Project Cost Estimate
2. USC Estimate Database
3. GDOT Item Mean Summary
4. Means Estimating Manual
5. Richardson's Estimating Manual
6. Vendor (Specify)
7. Other (See Calculations)

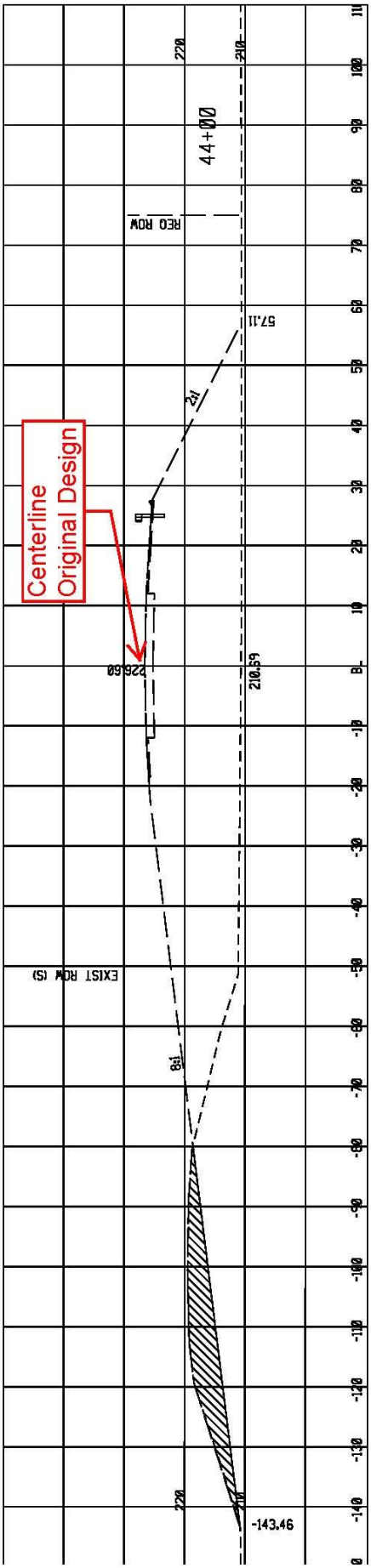

R-1.1 Original Design
3 of 7

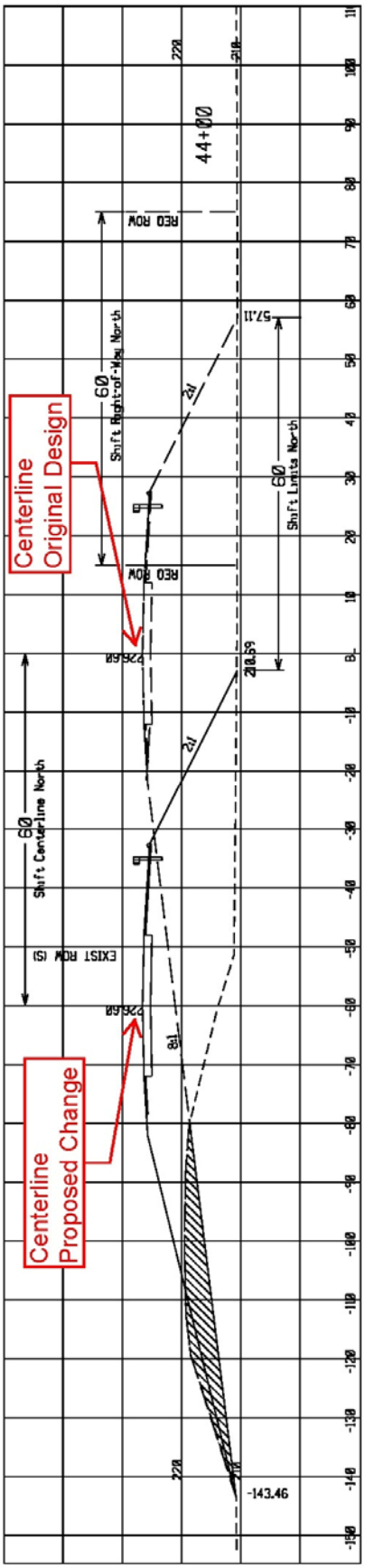

R-1.1 Proposed Change
4 of 7

CALCULATIONS

PROPOSAL NUMBER:	R-1.1	PAGE NUMBER:	5 of 7

PROJECT #/PI #:	BRST0-0524-00(009) / 442951-

Right-of-Way:

- Per June 2011 Preliminary Right-of-Way Cost Estimate 13.73 acres of right-of-way are required at a total cost of $350,000.
- $350,000 / 13.73 acres = $25,491 / acre
- A shift of the alignment 60 FT North would shift the required right-of-way line 60 FT North along the South side of the project; resulting in a 6.3 acre reduction (as measured in MicroStation).
- 13.73 acres – 6.3 acres = 7.43 acres required right-of-way in the proposed change.

Grading Complete:

- The Detailed Cost Estimate includes Grading Complete (earthwork, existing pavement removal, clearing & grubbing) at a total cost of $2,403,562.
- ***Since the details of the unit costs for earthwork, pavement removal and clearing & grubbing were not provided, a per acre cost for grading complete was calculated for the purposes of comparing the original and proposed designs for this idea.***
- The total area of work (including the bridge area) per measurements in the construction limits MicroStation file (442951LIMITS.DGN) is approximately 24.0 acres.
- $2,403,562 / 24.0 acres = $100,148.42 / acre.
- A shift of the alignment 60 FT North would shift the limits of construction 60 FT North along the South side of the project; resulting in a 5.7 acre reduction (as measured in MicroStation).
- 24.0 acres – 5.7 acres = 18.3 acres of grading complete.

Granular Embankment:

- The Detailed Cost Estimate includes a Granular Embankment quantity of 168,185 CY at a $9.00 / CY unit cost and total cost of $1,513,665.
- Based on a review it appears the Detailed Cost Estimate assumes the granular embankment would be placed from Sta 22+00 to 45+00 and Sta 51+00 to 84+00 for a total length of 5,600 LF. Assuming a total average width of 120 FT, the average depth of granular embankment would be 6.75 FT. These assumptions are based on examination of the cross sections as provided for the VE study and by measuring the average difference between the existing ground elevation and 18 inches above the 100-year flood elevation 217.10 FT.
- The granular embankment is assumed to only be required in the limits of the 100-year flood elevation from Sta 32+00 to 66+00 with an exception for the bridge length.
- Sta 32+00 to 45+00 and Sta 51+00 to 66+00 = total length of 2800 LF.
- Assume 60 FT reduction in width.
- 2800 LF length x 60 FT width x 6.75 FT average depth = 1,134,000 CF = 42,000 CY reduction.

- 168,185 CY – 42,000 CY = 126,185 CY of granular embankment required.

CALCULATIONS

PROPOSAL NUMBER:	R-1.1	PAGE NUMBER:	6 of 7

PROJECT #/PI #:	BRST0-0524-00(009) / 442951-

Roadway Full Depth Section:

- Per the construction plans it appears that a total of 14,403.44 SY of full depth roadway will be constructed.
- A review of the Detailed Cost Estimate indicates that the Full Depth Pavement would cost $46.26 / SY.
- A shift of the alignment North 60 FT would result in a shift up-station of the Western terminus by 163.5 FT and a shift back-station of the Eastern terminus by 106.3 FT resulting in a total reduction in roadway length by 269.8 FT.
- It is assumed that the overlay limits at the project beginning and ending would remain the same and the reduction in roadway length would be in the full depth pavement section.
- 269.8 FT x 24 FT width = 6,475.2 SF = 719.47 SY reduction in Full Depth Pavement
- 14,403.44 SY – 719.47 SY = 13,683.97 SY Full Depth Pavement

Paved Shoulder Section:

- Per the construction plans it appears that a total of 4,513.89 SY of new shoulder (6.5 FT paved) will be constructed.
- A review of the Detailed Cost Estimate indicates that the new Shoulder Pavement would cost $13.63 / SY.
- A shift of the alignment North 60 FT would result in a shift up-station of the Western terminus by 163.5 FT and a shift back-station of the Eastern terminus by 106.3 FT resulting in a total reduction in roadway length by 269.8 FT.
- It is assumed that the overlay limits at the project beginning and ending sections would remain the same and the reduction in roadway length would result in the same reduction in shoulder length.
- 269.8 FT x 6.5 FT width = 1,753.7 SF = 194.86 SY reduction in Shoulder Pavement
- 4,513.89 SY – 194.86 SY = 4,319.03 SY Shoulder Pavement

Wetland Mitigation:

- Per the Environmental Constraints form 14.9 acres of wetland impact have been calculated.
- Per an email from GDOT (Lisa Westberry) dated 05-21-12, the total cost for the mitigation credits is estimated at $360,000.
- $360,000 / 14.9 acres = $24,161 / acre
- A shift of the alignment North 60 FT would result in a shift the limits of construction and required right-of-way limits North by 60 FT. For the purposes of this estimate, the right-of-way limits are assumed as the limits for calculating the wetland impacts.
- The alignment shift results in 3.53 acres less wetland impacts (as measured in MicroStation).
- 14.9 acres – 3.53 acres = 11.37 acres wetland impact.

CALCULATIONS

PROPOSAL NUMBER:	R-1.1	PAGE NUMBER:	7 of 7

PROJECT #/PI #:	BRST0-0524-00(009) / 442951-

Filter Fabric:

- Detailed cost estimate includes 51,502 SY of Filter Fabric at $3/SY
- Assume 60 FT reduction width
- 2,800 FT length x 60 FT width = 168,000 SF = 18,667 SY
- 51,502 SY – 18,667 SY = 32,835 SY Filter Fabric

VALUE ENGINEERING PROPOSAL

PROPOSAL NUMBER:	R-2.0	PAGE NUMBER:	1 of 9

PROJECT #/PI #:	**BRST0-0524-00(009) / 442951-**
PROJECT TITLE:	**SR 234 over Chickasawhatchee Creek, Calhoun/Dougherty**

PROPOSAL DESCRIPTION: LOWER THE VERTICAL ALIGNMENT OF SR 234 FROM STA 24+00 TO STA 78+00 AS MUCH AS 6 FEET AT STA 59+00 WITH THE ELEVATION OF THE PROPOSED BRIDGE FROM STA 45+13 TO STA 50+63 BEING LOWERED APPROXIMATELY 4 FEET.

ORIGINAL DESIGN: The original design has a proposed vertical alignment with vertical curves at the following locations: PVI Sta 22+00 Elev 227.80, PVI Sta 31+00 Elev 225.00, PVI Sta 42+00 Elev 226.00, PVI Sta 74+00.24 Elev 235.65, PVI Sta 84+00.24 Elev 231.50

PROPOSED CHANGE: It is proposed to develop a lower vertical alignment with vertical curves at the following stations: PVI Sta 22+00 Elev 227.80, PVI Sta 26+00 Elev 226.50, PVI Sta 39+00 Elev 220.00, PVI Sta 53+00 Elev 225.00, PVI Sta 59+00 Elev 222.50. PVI Sta 76+00 Elev 234.82, PVI Sta 84+00.24 Elev 231.50

JUSTIFICATION: The vertical alignment of the roadway can be set to maintain 2 feet of freeboard so that the bottom of the beams are at an elevation 2' above the 50 year flood elevation of 216.53. The current design bridge deck is at a low elevation of 226.94 or 10.41 feet above the 50 year elevation and is proposed to be lowered to approximately 222.54 or 6.01 feet above the 50 year flood elevation.

ADVANTAGES:

- Reduction in earthwork volume
- Reduction in wetland impacts
- Reduction in Granular Embankment
- Reduction in Filter Fabric
- Reduces the length of the Culverts (2ea)
- Reduction in required Right of Way
- Meets GDOT Design Manual
- Meets AASHTO Guidelines

DISADVANTAGES:

- Redesign required

	INITIAL COST	OPERATING COST	TOTAL LIFE-CYCLE COST
ORIGINAL DESIGN:	$ 3,525,502		$ 3,525,502
PROPOSED CHANGE:	$ 3,114,139		$ 3,114,139
SAVINGS:	$ 411,363		$ 411,363

COST ESTIMATING WORKSHEET

PROPOSAL NUMBER:	R-2.0	PAGE NUMBER:	2 of 9

PROJECT #/PI #:	BRST0-0524-00(009) / 442951-

ORIGINAL DESIGN

ITEM	SOURCE CODE	U/M	QTY	UNIT COST	TOTAL COST
208,0100 In-Place Embankment	3	CY	207047	3.74	774,356
212-1000 Granular Embankment	1	CY	168185	9.00	1,513,665
455-1000 Filter Fabric/Emb Stab	1	SY	51502	3.00	154,506
500-3101 Cl A Conc Culvert 1	1	CY	313	400	125,200
500-3101 Cl A Conc Culvert 2	1	CY	426	400	184,800
511-1000 Bar Rein Steel Culvert 1	1	LB	34721	.70	24,305
511-1000 Bar Rein Steel Culvert 2	1	LB	55243	.70	38,670
Right of Way	1	AC	13.73	7000	350,000
Wetland Mitigation	7	AC	14.9	24,161	360,000
SUBTOTAL – COST TO PRIME					3,525,502
MARKUP				Incl.	--
TOTAL CONTRACT COST					**3,525,502**

PROPOSED CHANGE

ITEM	SOURCE CODE	U/M	QTY	UNIT COST	TOTAL COST
208,0100 In-Place Embankment	3	CY	136677	3.74	511,172
212-1000 Granular Embankment	1	CY	162585	9.00	1,463,265
455-1000 Filter Fabric/Emb Stab	1	SY	48124	3.00	144,372
500-3101 Cl A Conc Culvert 1	1	CY	274	400	109,600
500-3101 Cl A Conc Culvert 2	1	CY	395	400	158,000
511-1000 Bar Rein Steel Culvert 1	1	LB	30381	.70	21,267
511-1000 Bar Rein Steel Culvert 2	1	LB	51266	.70	35,887
Right of Way	1	AC	12.99	7000	337,154
Wetland Mitigation	7	AC	13.8	24,161	333,422
SUBTOTAL – COST TO PRIME					3,114,139
MARKUP				Incl.	--
TOTAL CONTRACT COST					**3,114,139**

Difference [Original-Proposed] **411,363**

SOURCES

1. Project Cost Estimate
2. USC Estimate Database
3. GDOT Item Mean Summary
4. Means Estimating Manual
5. Richardson's Estimating Manual
6. Vendor (Specify)
7. Other (See calculations)

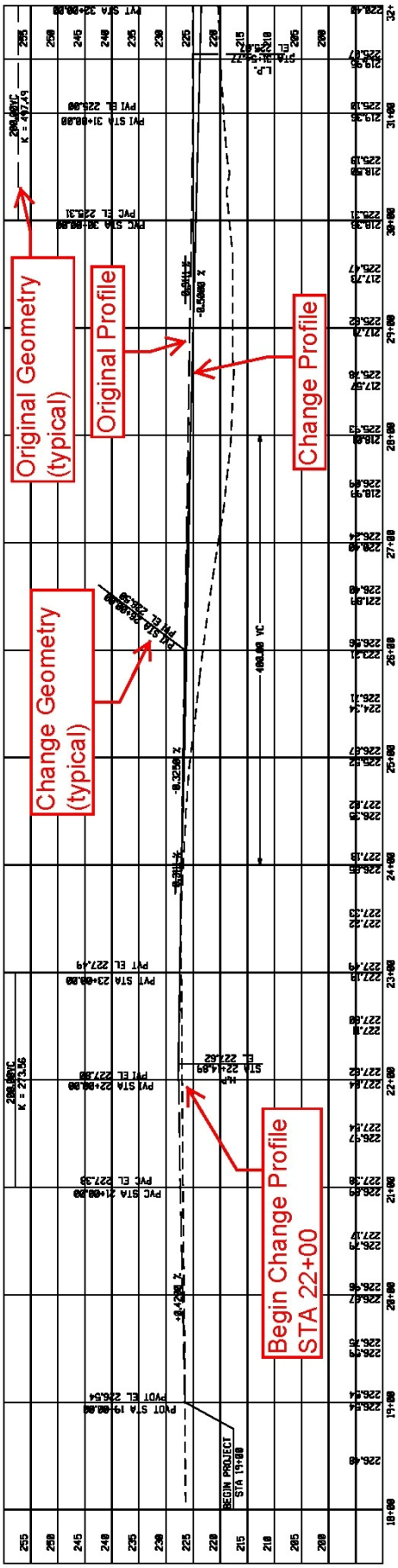

R-2.0 Proposed Change
3 of 9

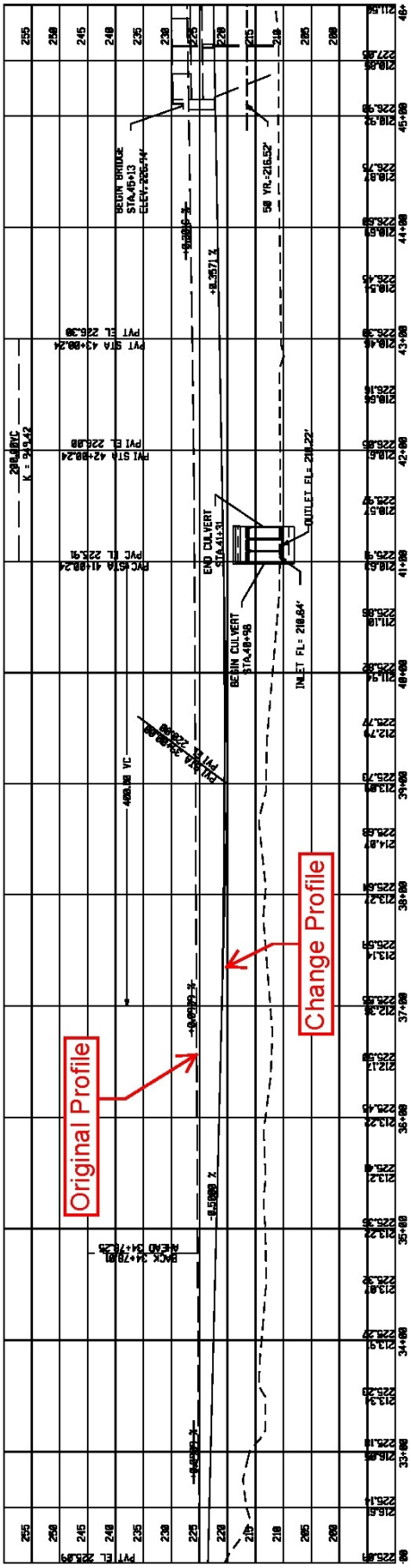

R-2.0 Proposed Change
4 of 9

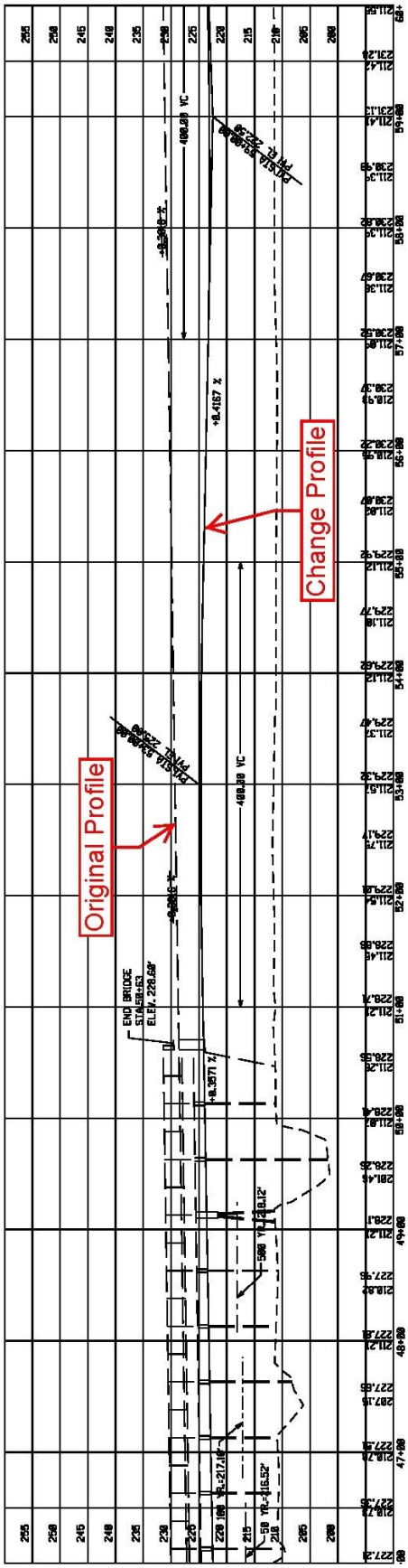

R-2.0.0 Proposed Change
5 of 9

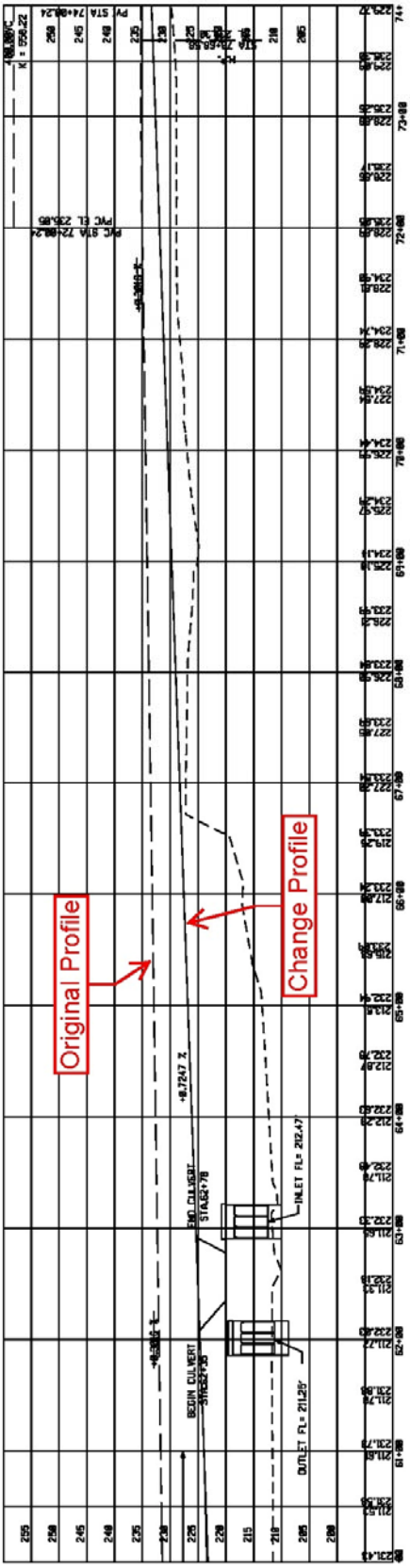

R-2.0 Proposed Change
6 of 9

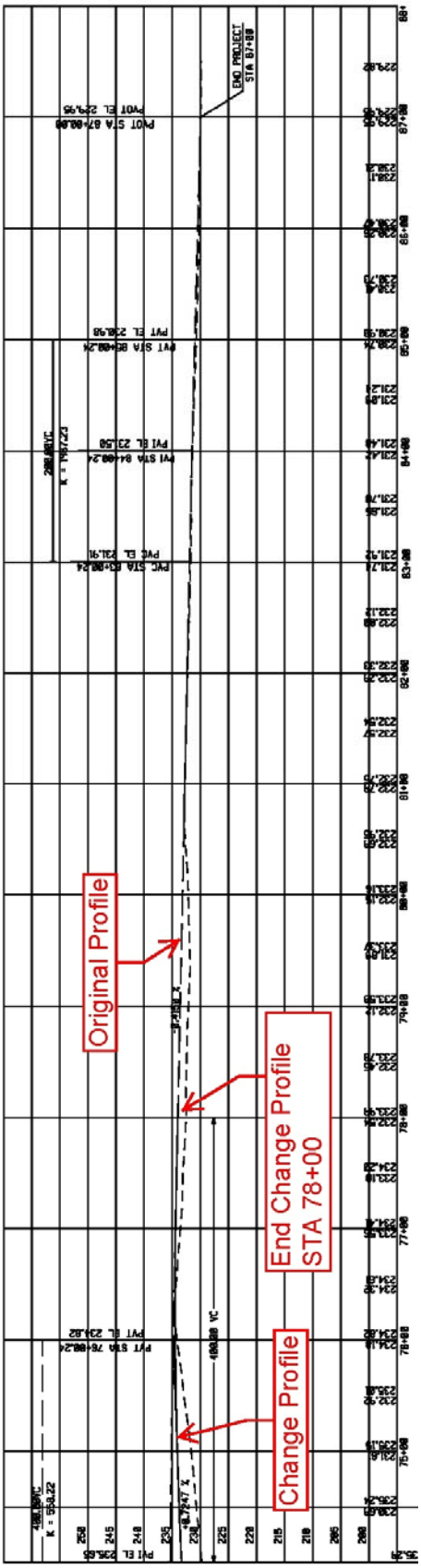

R-2.0 Proposed Change
7 of 9

CALCULATIONS

PROPOSAL NUMBER:	R-2.0	PAGE NUMBER:	8 of 9

PROJECT #/PI #:	BRST0-0524-00(009) / 442951-

EARTHWORK:
Station range for lower profile = Sta 32+00 to 75+50 = 4350 LF total
Bridge Sta 45+13 to 50+63 = 550 LF bridge
4350 LF– 550 LF= **3800** LF net roadway
Assume average height reduction = **5** feet
Assume average width toe to toe = **100** feet
(5ft)(100ft)(3800lf)=1900000 CF / 27 = **70370 CY reduction in fill** (in-place embankment)
Original from project earthwork calc = 207047 CY neat
Minus 70370 CY reduction = **136677 CY**

GRANULAR EMBANKMENT:
For worst case, assume granular height required = 6.75 feet
Assume average reduced footprint = 4 feet x 2 sides
(2sides)(4FT)(6.75FT)(Assume 2800LF)=151200 / 27 = **5600CY reduction in granular embankment**
Original from project estimate = 168185 CY
Minus 5600 CY reduction = **162585 CY**

FILTER FABRIC:
Assume reduction in footprint = 4 feet x 2 sides
(2sides)(4ft)(3800lf)=30400 SF / 9 = **3378 SY reduction in Fabric Material**
Original from project estimate = 51502 SY
Minus 3378 SY reduction = **48124 SY**

CULVERTS:
Culvert 1 approximately 80 lf of barrel reduced by 10 lf or 12.5%
Class A Conc 313 CY x 12.5% = **39 CY reduction**
313 CY minus 39 CY = **274 CY**
Bar Rein Steel 34721 lbs x 12.5% = **4340 lbs reduction**
34721 minus 4340 lbs = **30381 lbs**

Culvert 2 approximately 140 lf of barrel reduced by 10 lf or 7.2%
Class A Conc 426 CY x 7.2% = **31 CY reduction**
426 CY minus 31 CY = **395 CY**
Bar Rein Steel 55243 lbs x 7.2% = **3977 lbs reduction**
55243 minus 3977 lbs = **51266 lbs**

CALCULATIONS

PROPOSAL NUMBER:	R-2.0	PAGE NUMBER:	9 of 9

PROJECT #/PI #:	BRST0-0524-00(009) / 442951-

RIGHT OF WAY:
Toe of slope reduction approximately 4 feet using same 2:1 slopes
Assume right of way reduction on South side = 5 feet for entire required property frontage
Sta 20+69.11 to Sta 84+71.71 = 6421 LF right of way frontage
6421 LF x 5' reduction = 32105 SF or **0.74 acres of right of way reduction**
0.74 ac x $7000 = $5180
$5181 x 55% = $2849
$5180 + $2849 = $8029
$8029 x 60% = $4817
$8029 + $4817 = **$12,846 right of way cost reduction**

WETLAND MITIGATION:
•Per the Environmental Constraints form 14.9 acres of wetland impact have been calculated.
•Per an email from GDOT (Lisa Westberry) dated 05-21-12, the total cost for the mitigation credits is estimated at $360,000.
•$360,000 / 14.9 acres = $24,161 / acre
The lower profile eliminates the wetland impacts that are North of the existing SR 234 between Sta 34+00 to 45+13 (1113 LF) and Sta 50+63 to 64+25 (1362 LF)
(1113 LF + 1362 LF) = 2475 LF
Approximate average width = 20 feet
2475 LF x 20 feet wide = 49500 SF = **1.1 Acre reduction in wetland impacts**

VALUE ENGINEERING PROPOSAL

PROPOSAL NUMBER:	R-3.0	PAGE NUMBER:	1 of 6

PROJECT #/PI #:	**BRST0-0524-00(009) / 442951-**
PROJECT TITLE:	**SR 234 over Chickasawhatchee Creek, Calhoun/Dougherty**

PROPOSAL DESCRIPTION: SHORTEN HORIZONTAL CURVES AT TIE-INS.

ORIGINAL DESIGN: The current design alignment utilizes a 3,819.72' radius at a superelevation rate of 3.8% at the project beginning and a 2,864.79' radius at a superelevation rate of 5.0% at the project end.

PROPOSED CHANGE: The proposed change utilizes a 1,890' radius at a superelevation rate of 5.0% at the project beginning and a 2,200' radius at a superelevation rate of 4.2% at the project end.

JUSTIFICATION: Shortening the curve length through radius reduction would provide a reduction in the total project length. The 1890' radius with 5% superelevation and the 2200' radius with 4.2% superelevation meet AASHTO Guidelines for a 55 mph roadway.

ADVANTAGES:

- Reduces earthwork volume
- Reduces clearing and grubbing
- Reduces Construction costs

DISADVANTAGES:

- None apparent

	INITIAL COST	OPERATING COST	TOTAL LIFE-CYCLE COST
ORIGINAL DESIGN:	$ 4,647,054		$ 4,647,054
PROPOSED CHANGE:	$ 4,262,296		$ 4,262,296
SAVINGS:	$ 384,758		$ 384,758

COST ESTIMATING WORKSHEET

PROPOSAL NUMBER:	R-3.0	PAGE NUMBER:	2 of 6

PROJECT #/PI #:	BRST0-0524-00(009) / 442951-

ORIGINAL DESIGN

ITEM	SOURCE CODE	U/M	QTY	UNIT COST	TOTAL COST
Grading Complete	7	AC	24.0	100,148.42	2,405,562
Granular Embankment	1	CY	168,185	9.00	1,513,665
Roadway Full Depth Section	1	SY	14,403.44	46.26	666,303
Paved Shoulder Section	1	SY	4,513.89	13.63	61,524
SUBTOTAL – COST TO PRIME					4,647,054
MARKUP					--
TOTAL CONTRACT COST					**4,647,054**

PROPOSED CHANGE

ITEM	SOURCE CODE	U/M	QTY	UNIT COST	TOTAL COST
Grading Complete	7	AC	22.45	100,148.42	2,248,332
Granular Embankment	1	CY	151,256	9.00	1,361,304
Roadway Full Depth Section	1	SY	12,898.64	46.26	596,691
Paved Shoulder Section	1	SY	4,106.34	13.63	55,969
SUBTOTAL – COST TO PRIME					4,262,296
MARKUP					--
TOTAL CONTRACT COST					**4,262,296**

Difference [Original-Proposed] **384,758**

SOURCES

1. Project Cost Estimate
2. USC Estimate Database
3. GDOT Item Mean Summary
4. Means Estimating Manual
5. Richardson's Estimating Manual
6. Vendor (Specify)
7. Other (See Calculations)

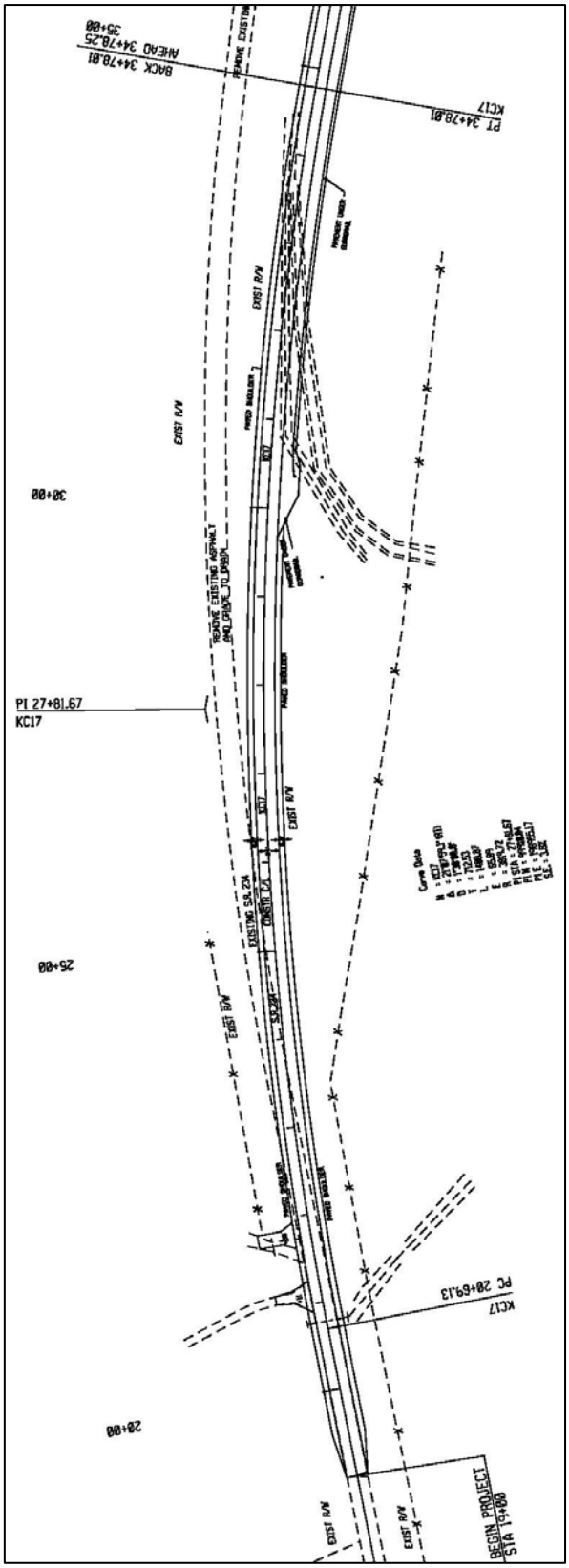

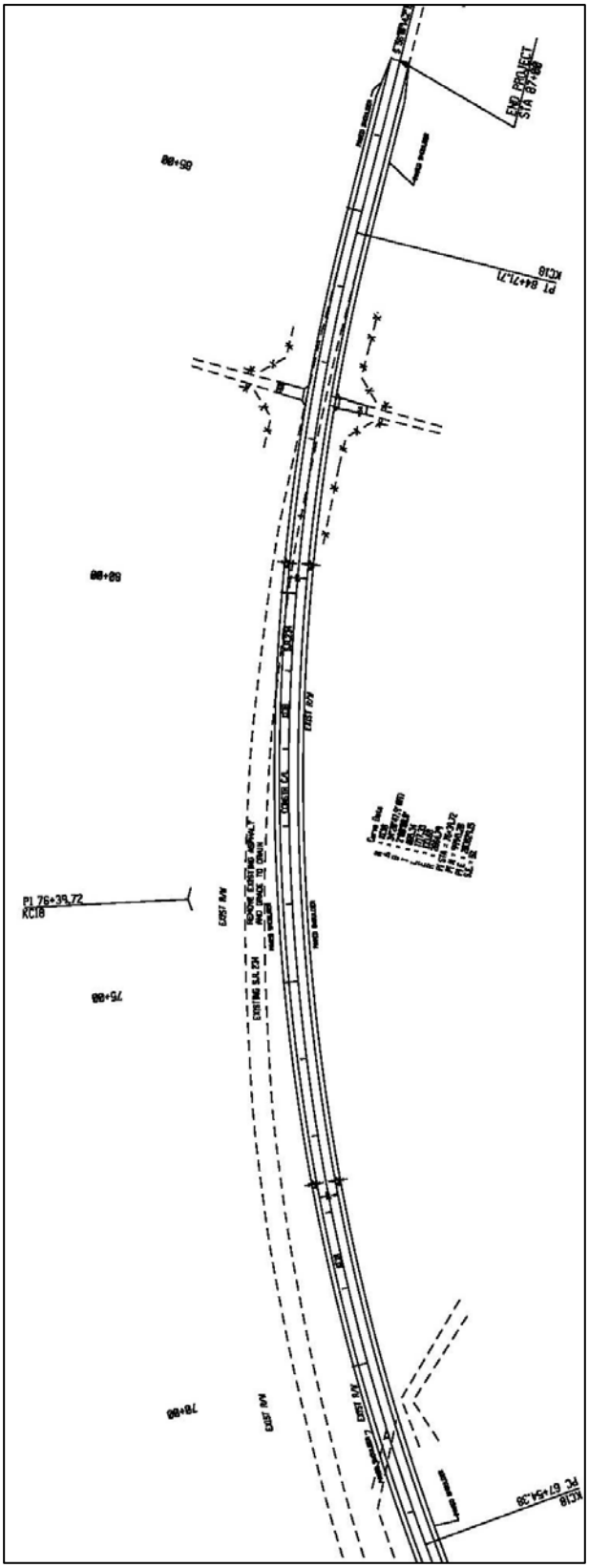

R-3.0 Original Design
3 of 6

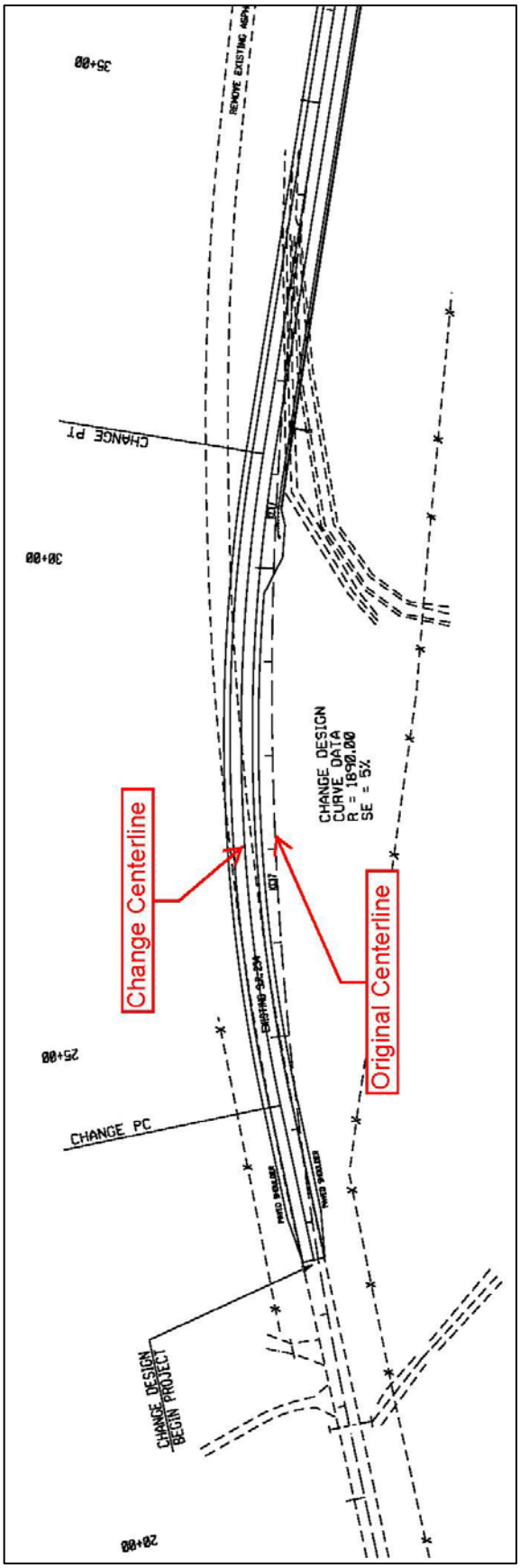

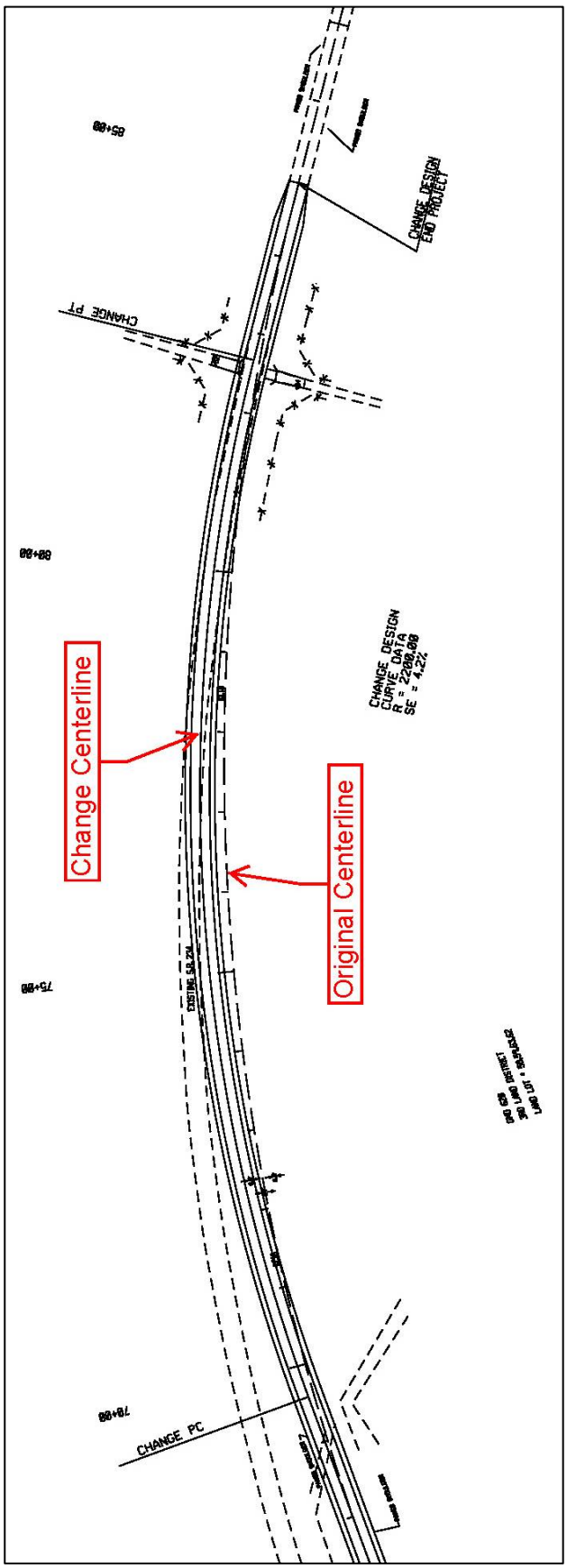

R-3.0 Proposed Change
4 of 6

CALCULATIONS

PROPOSAL NUMBER:	R-3.0	PAGE NUMBER:	5 of 6

PROJECT #/PI #:	BRST0-0524-00(009) / 442951-

Grading Complete:

- The Detailed Cost Estimate includes Grading Complete (earthwork, existing pavement removal, clearing & grubbing) at a total cost of $2,403,562.
- ***Since the details of the unit costs for earthwork, pavement removal and clearing & grubbing were not provided, a per acre cost for grading complete was calculated for the purposes of comparing the original and proposed designs for this idea.***
- The total area of work (including the bridge area) per measurements in the construction limits MicroStation file (442951LIMITS.DGN) is approximately 24.0 acres.
- $2,403,562 / 24.0 acres = $100,148.42 / acre.
- Reducing the radius of the curves at the beginning and end of the project limits would result in a shift up-station of the Western terminus by 359.3 FT and a shift back-station of the Eastern terminus by 205.0 FT resulting in a total reduction in roadway length by 564.3 FT.
- Assuming an average footprint width of 120 FT results in a 1.55 acre reduction (564.3 FT x 120 FT = 67,716 SF = 1.55 acres).
- 24.0 acres – 1.55 acres = 22.45 acres of grading complete.

Granular Embankment:

- The Detailed Cost Estimate includes a Granular Embankment quantity of 168,185 CY at a $9.00 / CY unit cost and total cost of $1,513,665.
- Based on a review it appears the Detailed Cost Estimate assumes the granular embankment would be placed from Sta 22+00 to 45+00 and Sta 51+00 to 84+00 for a total length of 5,600 LF. Assuming a total average width of 120 FT, the average depth of granular embankment would be 6.75 FT. These assumptions are based on examination of the cross sections as provided for the VE study and by measuring the average difference between the existing ground elevation and 18 inches above the 100-year flood elevation 217.10 FT.
- Reducing the radius of the curves at the beginning and end of the project limits would result in a shift up-station of the Western terminus by 359.3 FT and a shift back-station of the Eastern terminus by 205.0 FT resulting in a total reduction in roadway length by 564.3 FT.
- 564.3 LF length x 120 FT width x 6.75 FT average depth = 457,083 CF = 16,929 CY reduction.
- 168,185 CY – 16,929 CY = 151,256 CY of granular embankment required.

CALCULATIONS

PROPOSAL NUMBER:	R-3.0	PAGE NUMBER:	6 of 6

PROJECT #/PI #:	BRST0-0524-00(009) / 442951-

Roadway Full Depth Section:

- Per the construction plans it appears that a total of 14,403.44 SY of full depth roadway will be constructed.
- A review of the Detailed Cost Estimate indicates that the Full Depth Pavement would cost $46.26 / SY.
- Reducing the radius of the curves at the beginning and end of the project limits would result in a shift up-station of the Western terminus by 359.3 FT and a shift back-station of the Eastern terminus by 205.0 FT resulting in a total reduction in roadway length by 564.3 FT.
- It is assumed that the overlay limits at the project beginning and ending would remain the same and the reduction in roadway length would be in the full depth pavement section.
- 564.3 FT x 24 FT width = 13,543.2 SF = 1504.8 SY reduction in Full Depth Pavement
- 14,403.44 SY – 1504.8 SY = 12,898.64 SY Full Depth Pavement

Paved Shoulder Section:

- Per the construction plans it appears that a total of 4,513.89 SY of new shoulder (6.5 FT paved) will be constructed.
- A review of the Detailed Cost Estimate indicates that the new Shoulder Pavement would cost $13.63 / SY.
- Reducing the radius of the curves at the beginning and end of the project limits would result in a shift up-station of the Western terminus by 359.3 FT and a shift back-station of the Eastern terminus by 205.0 FT resulting in a total reduction in roadway length by 564.3 FT.
- It is assumed that the overlay limits at the project beginning and ending sections would remain the same and the reduction in roadway length would result in the same reduction in shoulder length.
- 564.3 FT x 6.5 FT width = 3,667.95 SF = 407.55 SY reduction in Shoulder Pavement
- 4,513.89 SY – 407.55 SY = 4,106.34 SY Shoulder Pavement

VALUE ENGINEERING PROPOSAL

PROPOSAL NUMBER:	R-4.0	PAGE NUMBER:	1 of 5

PROJECT #/PI #:	**BRST0-0524-00(009) / 442951-**
PROJECT TITLE:	**SR 234 over Chickasawhatchee Creek, Calhoun/Dougherty**

PROPOSAL DESCRIPTION: USE NORMAL FILL SLOPES OF 4:1 WITH A MAXIMUM OF 2:1 FOR THE SIDE SLOPES ON THE NORTH SIDE OF THE PROPOSED ROADWAY IN LIEU OF THE FILL SLOPES THAT VARY FROM 6:1 TO 26:1.

ORIGINAL DESIGN: In the current design, fill slopes on North side of proposed roadway vary from 6:1 to 26:1, and are projected to the toe of slope on the North side of the existing roadway.

PROPOSED CHANGE: It is proposed to use normal slopes of 4:1 typical with 2:1 maximum for the proposed roadway.

JUSTIFICATION: Building normal fill slopes at 4:1 with a maximum of 2:1 is standard GDOT procedure and provides significant reductions in earthwork and project costs.

ADVANTAGES:

- Reduces Earthwork volume
- Reduces Wetland impacts
- Reduces Granular Embankment
- Reduces Filter Fabric
- Meets GDOT Design Policy
- Meets AASHTO Guidelines

DISADVANTAGES:

- Requires additional Guardrail on North side of Roadway

	INITIAL COST	OPERATING COST	TOTAL LIFE-CYCLE COST
ORIGINAL DESIGN:	$ 2,968,230		$ 2,968,230
PROPOSED CHANGE:	$ 2,701,137		$ 2,701,137
SAVINGS:	$ 267,093		$ 267,093

COST ESTIMATING WORKSHEET

PROPOSAL NUMBER:	R-4.0	PAGE NUMBER:	2 of 5

PROJECT #/PI #:	BRST0-0524-00(009) / 442951-

ORIGINAL DESIGN

ITEM	SOURCE CODE	U/M	QTY	UNIT COST	TOTAL COST
208-0100 In-Place Embankment	3	CY	207047	3.74	774,356
212-1000 Granular Embankment	1	CY	168185	9.00	1,513,665
455-1000 Filter Fabric/Emb Stab	1	SY	51502	3.00	154,506
620-0100 Temp Barrier Method 1	1	LF	4076	20.00	81,520
641-1200 Guardrail Tp W	1	LF	3225	17.00	54,825
436-1000 Asph Curb	1	LF	2796	10.50	29,358
Wetland Mitigation	7	AC	14.9	24,161	360,000
SUBTOTAL – COST TO PRIME					2,968,230
MARKUP				Incl.	--
TOTAL CONTRACT COST					**2,968,230**

PROPOSED CHANGE

ITEM	SOURCE CODE	U/M	QTY	UNIT COST	TOTAL COST
208-0100 In-Place Embankment	3	CY	160380	3.74	599,821
212-1000 Granular Embankment	1	CY	160407	9.00	1,443,636
455-1000 Filter Fabric/Emb Stab	1	SY	49169	3.00	147,507
620-0100 Temp Barrier Method 1	1	LF	2603	20.00	52,060
641-1200 Guardrail Tp W	1	LF	4698	17.00	79,866
436-1000 Asph Curb	1	LF	4269	10.50	44,825
Wetland Mitigation	7	AC	13.8	24,161	333,422
SUBTOTAL – COST TO PRIME					2,701,137
MARKUP					--
TOTAL CONTRACT COST					**2,701,137**

Difference [Original-Proposed] **267,093**

SOURCES

1. Project Cost Estimate
2. USC Estimate Database
3. GDOT Item Mean Summary
4. Means Estimating Manual
5. Richardson's Estimating Manual
6. Vendor (Specify)
7. Other (See Calculations)

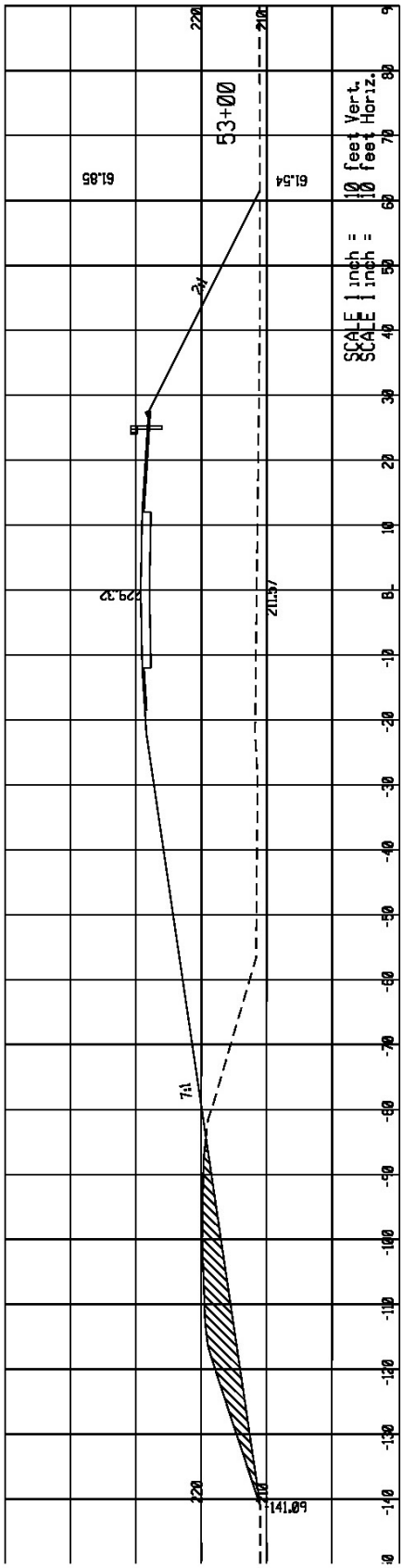

R-4.0 Original Design
3 of 5

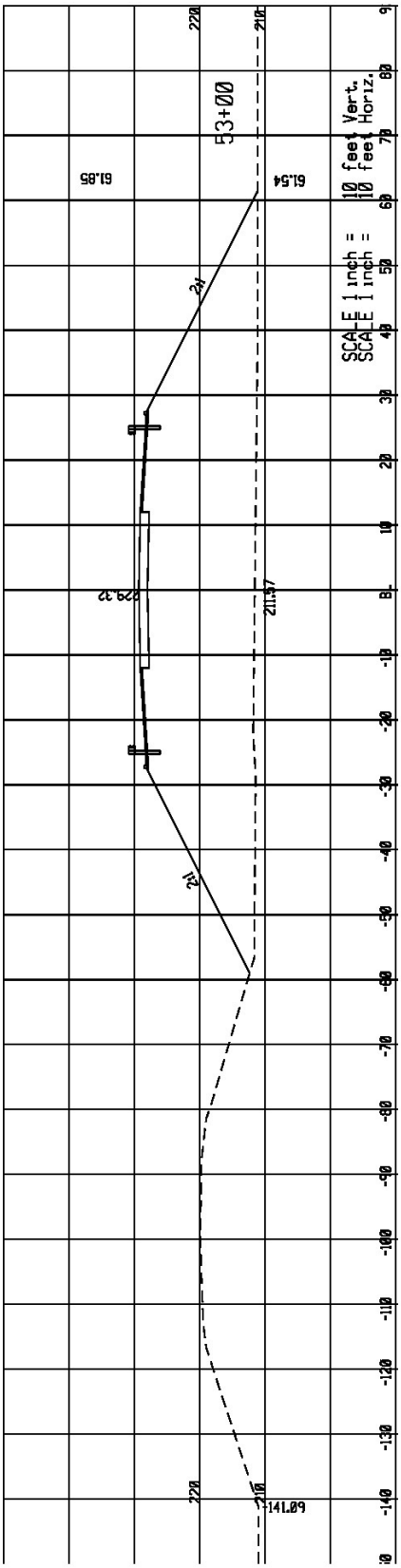

R-4.0 Proposed Change
4 of 5

CALCULATIONS

PROPOSAL NUMBER:	R-4.0	PAGE NUMBER:	5 of 5

PROJECT #/PI #:	BRST0-0524-00(009) / 442951-

EARTHWORK:
Station range for normal slopes = Sta 29+00 to 76+50 = 4750 LF total
Bridge Sta 45+13 to 50+63 = 550 LF bridge
4750 – 550 = 4200 LF net roadway
Assume average end area = 300 SF
(300sf)(4200lf)=1260000 CF / 27 = **46667 CY reduction in fill (in-place embankment)**
Original from project earthwork calc = 207047 neat
Minus 46667 CY reduction = 160380 CY
(Check for earthwork reduction from project staging plans and earthwork calculations: Stage 1 in-place (neat) = 159,069 CY. Final in-place (neat) = 207047 CY. Difference = 47978 CY which is close to the 46667 above. Stage 1 cross sections are using normal and 2:1 slopes but are not widened for guardrail on the North side as will be required with slopes over 10'.)

GRANULAR EMBANKMENT:
For worst case, assume granular height required = 5 feet
Assume average reduced footprint = 10 feet
(5ft)(10ft)(4200lf)=210000 CF / 27 = **7778 CY reduction in granular embankment**
Original from project estimate = 168185 CY Minus 7778 CY reduction = 160407 CY

FILTER FABRIC:
Assume reduction in footprint = 5 feet
(5ft)(4200lf)=21000 SF / 9 = **2333 SY reduction in Fabric Material**
Original from project estimate = 51502 SY Minus 2333 SY reduction = 49169 SY

GUARDRAIL/ASPH CURB:
Add guardrail from Sta 52+16 left to Sta 66+89 left = **1473 LF additional Guardrail**
Original 3225 LF + 1473 LF = 4698 LF
Also =**1473 LF additional Asph Curb**
Original 2796 LF + 1473 LF = 4269 LF

WETLAND MITIGATION:
•Per the Environmental Constraints form 14.9 acres of wetland impact have been calculated.
•Per an email from GDOT (Lisa Westberry) dated 05-21-12, the total cost for the mitigation credits is estimated at $360,000.
•$360,000 / 14.9 acres = $24,161 / acre
The steeper slopes eliminates the wetland impacts that are North of the existing SR 234 between Sta 34+00 to 45+13 (1113 LF) and Sta 50+63 to 64+25 (1362 LF)
(1113 LF + 1362 LF) = 2475 LF
Approximate average width = 20 feet
2475 LF x 20 feet wide = 49500 SF = **1.1 Acre reduction in wetland impacts**

VALUE ENGINEERING PROPOSAL

PROPOSAL NUMBER:	R-6.0	PAGE NUMBER:	1 of 5

PROJECT #/PI #:	**BRST0-0524-00(009) / 442951-**
PROJECT TITLE:	**SR 234 over Chickasawhatchee Creek, Calhoun/Dougherty**

PROPOSAL DESCRIPTION: REDUCE WIDTH OF PAVED SHOULDER FROM 6.5' TO 2'AND UTILIZE FULL DEPTH SHOULDER.

ORIGINAL DESIGN: The current proposed design of SR 234 includes two 12' wide travel lanes with a 6.5' paved shoulder. The shoulder consists of 2 layers of asphalt (135 lbs of 9.5 mm and 220 lbs of 19 mm) with no base course. See note below under justification.

PROPOSED CHANGE: It is proposed to reduce the width of the paved shoulder on the roadway from 6.5' to 2'. The 2' wide shoulder section would be the same as the adjacent roadway pavement section (135 lbs of 9.5 mm, 220 lbs of 19 mm, 550 lbs of 25 mm, and an 8" graded aggregate base course).

JUSTIFICATION: This roadway is not designated as a bike route, has a low volume of trucks (8%), and is a rural road with 55 MPH speed limit. AASHTO policy allows a 2' wide paved shoulder for this road type. Thus, this revision would still meet design policies while reducing impervious surface areas and providing a cost savings to the project.
Note: While the current design documents do not indicate a graded aggregate course under the paved shoulder, it is assumed a minimum 6" GAB course is appropriate under this shoulder for durability and maintenance purposes; this is included in the cost of the current design. Should a GAB course not be needed, this proposal would result in a net cost add of $6,000 but would provide a much more durable shoulder section.

ADVANTAGES:
- Reduces construction costs
- Reduces impervious area
- Can be constructed with adjacent pavement run

DISADVANTAGES:
- None apparent

	INITIAL COST	OPERATING COST	TOTAL LIFE-CYCLE COST
ORIGINAL DESIGN:	$ 215,370		$ 215,370
PROPOSED CHANGE:	$ 128,600		$ 128,600
SAVINGS:	$ 86,770		$ 86,770

COST ESTIMATING WORKSHEET

PROPOSAL NUMBER:	R-6.0	PAGE NUMBER:	2 of 5

PROJECT #/PI #:	BRST0-0524-00(009) / 442951-

ORIGINAL DESIGN

ITEM	SOURCE CODE	U/M	QTY	UNIT COST	TOTAL COST
2-layer paved shoulder, 6.5' wide	1	SY	9,000	13.63	122,670
6" base course	3	SY	9,000	10.30	92,700
SUBTOTAL – COST TO PRIME					215,370
MARKUP				Incl.	--
TOTAL CONTRACT COST					**215,370**

PROPOSED CHANGE

ITEM	SOURCE CODE	U/M	QTY	UNIT COST	TOTAL COST
Full-depth paved shoulder, 2' wide	1	SY	2,780	46.26	128,600
SUBTOTAL – COST TO PRIME					128,600
MARKUP				Incl.	--
TOTAL CONTRACT COST					**128,600**

Difference [Original-Proposed] **86,770**

SOURCES

1. Project Cost Estimate
2. USC Estimate Database
3. GDOT Item Mean Summary
4. Means Estimating Manual
5. Richardson's Estimating Manual
6. Vendor (Specify)
7. Other (Specify)

ORIGINAL DESIGN SKETCH/DETAIL

PROPOSAL NUMBER:	R-6.0	PAGE NUMBER:	3 of 5

PROJECT #/PI #:	BRST0-0524-00(009) / 442951-

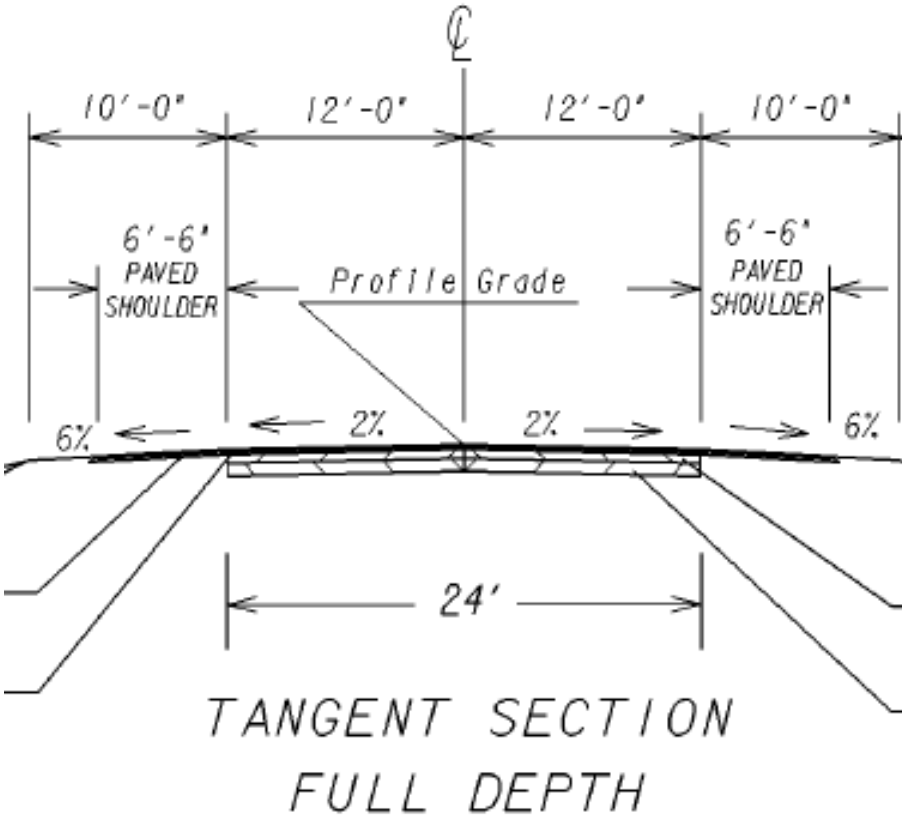

PROPOSED CHANGE SKETCH/DETAIL

PROPOSAL NUMBER:	R-6.0	PAGE NUMBER:	4 of 5

PROJECT #/PI #:	BRST0-0524-00(009) / 442951-

Proposed Change: Reduce 6’6” paved shoulder to 2’0” full depth

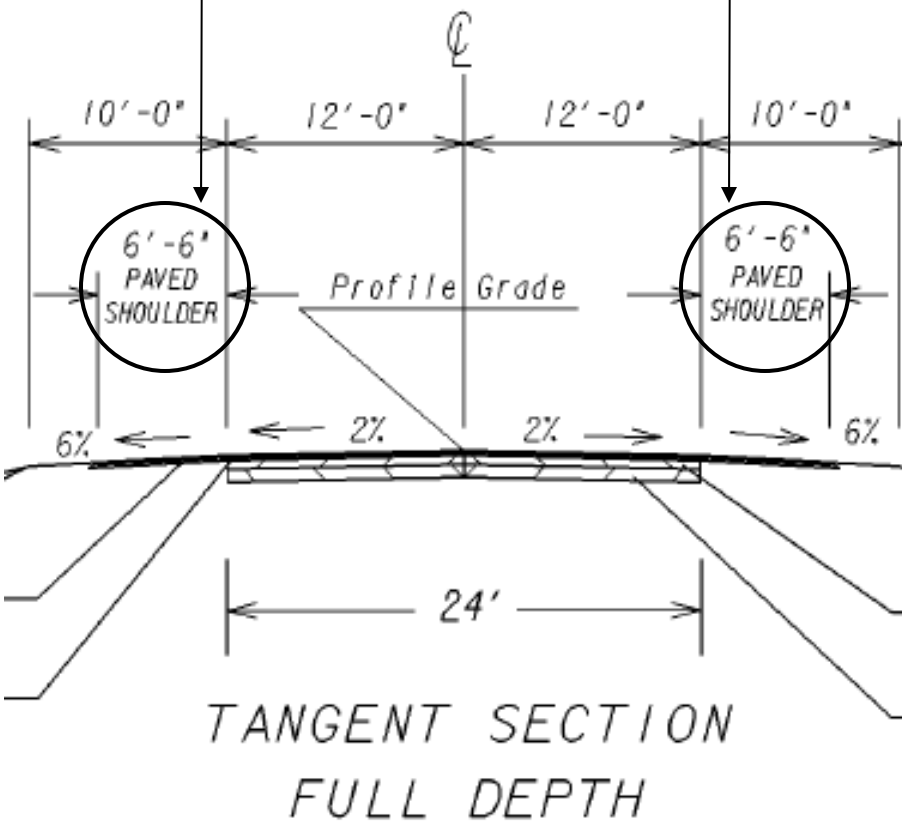

CALCULATIONS

PROPOSAL NUMBER:	R-6.0	PAGE NUMBER:	5 of 5

PROJECT #/PI #:	BRST0-0524-00(009) / 442951-

Current Design quantities:
6,250 LF of roadway
6,250 x 6.5' wide x 2 sides of road = 81,250 SF / 9 = 9,000 SY of shoulder

Proposed Change Quantities:
6,250 x 2' wide x 2 sides of road = 25,000 SF / 9 = 2,780 SY of shoulder

Current Design Cost:
2-layer asphalt shoulder
Top layer (135 lbs of 9.5 mm): 135 lbs/SY x 1 ton/2000 lbs x $78/ton = $5.27/SY
2nd layer (220 lbs of 19 mm): 220 lbs/SY x 1 ton/2000 lbs x $76/ton = $8.36/SY
6" GAB base course (note: base course not included in current design but VE Team believes it is appropriate for shoulder durability): $10.30/SY
Total cost: $5.27 + $8.36 + $10.30 = $23.93/SY

Proposed Change Cost:
Full pavement section, 2' wide
Top layer (135 lbs of 9.5 mm): 135 lbs/SY x 1 ton/2000 lbs x $78/ton = $5.27/SY
2nd layer (220 lbs of 19 mm): 220 lbs/SY x 1 ton/2000 lbs x $76/ton = $8.36/SY
3rd layer (550 lbs of 25 mm): 550 lbs/SY x 1 ton/2000 lbs x $75/ton = $20.63
8" GAB: $12.00/SY
Total Cost: $5.27 + $8.36+ $20.63 + $12.00 = $46.26/SY

VALUE ENGINEERING PROPOSAL

PROPOSAL NUMBER:	R-6.1	PAGE NUMBER:	1 of 5

PROJECT #/PI #:	**BRST0-0524-00(009) / 442951-**
PROJECT TITLE:	**SR 234 over Chickasawhatchee Creek, Calhoun/Dougherty**

PROPOSAL DESCRIPTION: REDUCE WIDTH OF PAVED SHOULDER FROM 6.5' TO 4'.

ORIGINAL DESIGN: The current proposed design of SR 234 includes two 12' wide travel lanes with a 6.5' paved shoulder. The shoulder consists of 2 layers of asphalt (135 lbs of 9.5 mm and 220 lbs of 19 mm) with no base course. See note below under justification.

PROPOSED CHANGE: It is proposed to reduce the width of the paved shoulder on the roadway from 6.5' to 4'. The 4' wide shoulder section would be the same as the current design of the shoulder (135 lbs of 9.5 mm, 220 lbs of 19 mm, and an assumed 6" graded aggregate base course – see note below).

JUSTIFICATION: This roadway is not designated as a bike route, has a low volume of trucks (8%), and is a rural road with 55 MPH speed limit. The 4' width proposed exceeds the minimum 2' allowed by AASHTO policy for this road type. Also, this revision would meet current GDOT design guidelines while reducing impervious surface areas and provide a cost savings to the project.

Note: While the current design documents do not indicate a graded aggregate course under the paved shoulder, it is assumed a minimum 6" GAB course is appropriate under this shoulder for durability and maintenance purposes; this is included in the cost of the current design. Should a GAB course not be needed, this proposal would result in a net cost add of $11,000 but would provide a much more durable shoulder section (when compared to a shoulder without a base course).

ADVANTAGES:
- Reduces construction costs
- Reduces impervious area

DISADVANTAGES:
- None apparent

	INITIAL COST	OPERATING COST	TOTAL LIFE-CYCLE COST
ORIGINAL DESIGN:	$ 215,370		$ 215,370
PROPOSED CHANGE:	$ 133,050		$ 133,050
SAVINGS:	$ 82,320		$ 82,320

COST ESTIMATING WORKSHEET

PROPOSAL NUMBER:	R-6.1	PAGE NUMBER:	2 of 5

PROJECT #/PI #:	BRST0-0524-00(009) / 442951-

ORIGINAL DESIGN

ITEM	SOURCE CODE	U/M	QTY	UNIT COST	TOTAL COST
2-layer paved shoulder, 6.5' wide	1	SY	9,000	13.63	122,670
6" base course	3	SY	9,000	10.30	92,700
SUBTOTAL – COST TO PRIME					215,370
MARKUP				Incl.	--
TOTAL CONTRACT COST					**215,370**

PROPOSED CHANGE

ITEM	SOURCE CODE	U/M	QTY	UNIT COST	TOTAL COST
2-layer paved shoulder, 6.5' wide	1	SY	5,560	13.63	75,780
6" base course	3	SY	5,560	10.30	57,270
SUBTOTAL – COST TO PRIME					133,050
MARKUP				Incl.	--
TOTAL CONTRACT COST					**133,050**

Difference [Original-Proposed] **82,320**

SOURCES

1. Project Cost Estimate
2. USC Estimate Database
3. GDOT Item Mean Summary
4. Means Estimating Manual
5. Richardson's Estimating Manual
6. Vendor (Specify)
7. Other (Specify)

ORIGINAL DESIGN SKETCH/DETAIL

PROPOSAL NUMBER:	R-6.1	PAGE NUMBER:	3 of 5

PROJECT #/PI #:	BRST0-0524-00(009) / 442951-

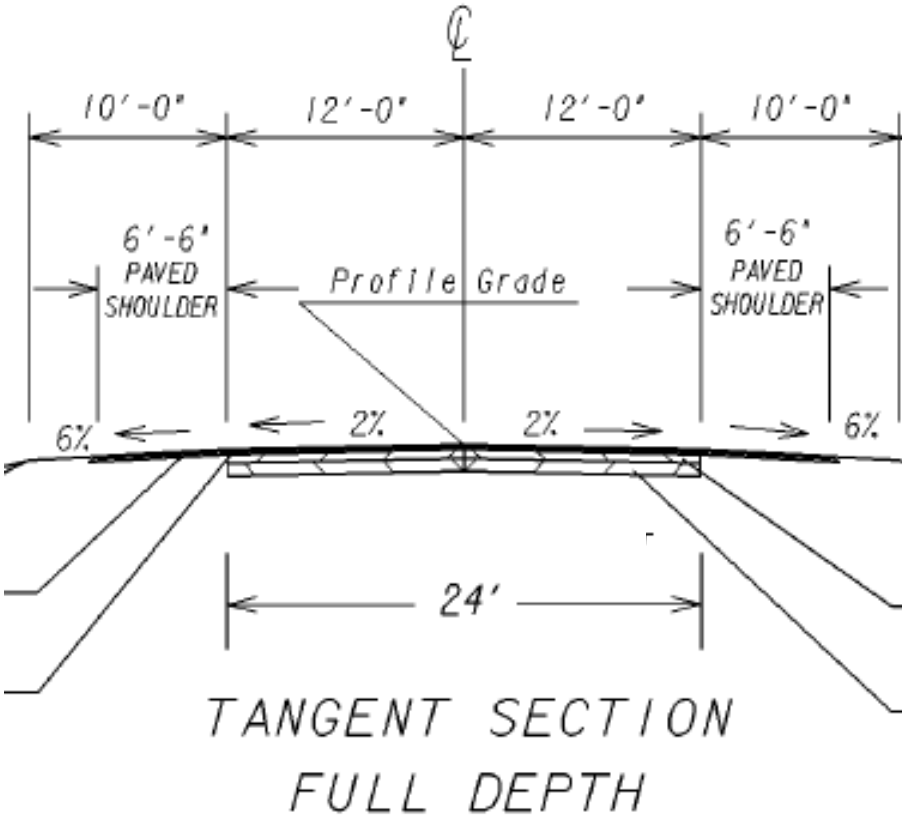

PROPOSED CHANGE SKETCH/DETAIL

PROPOSAL NUMBER:	R-6.1	PAGE NUMBER:	4 of 5

PROJECT #/PI #:	BRST0-0524-00(009) / 442951-

Proposed Change: Reduce 6'6" paved shoulder to 4'0"

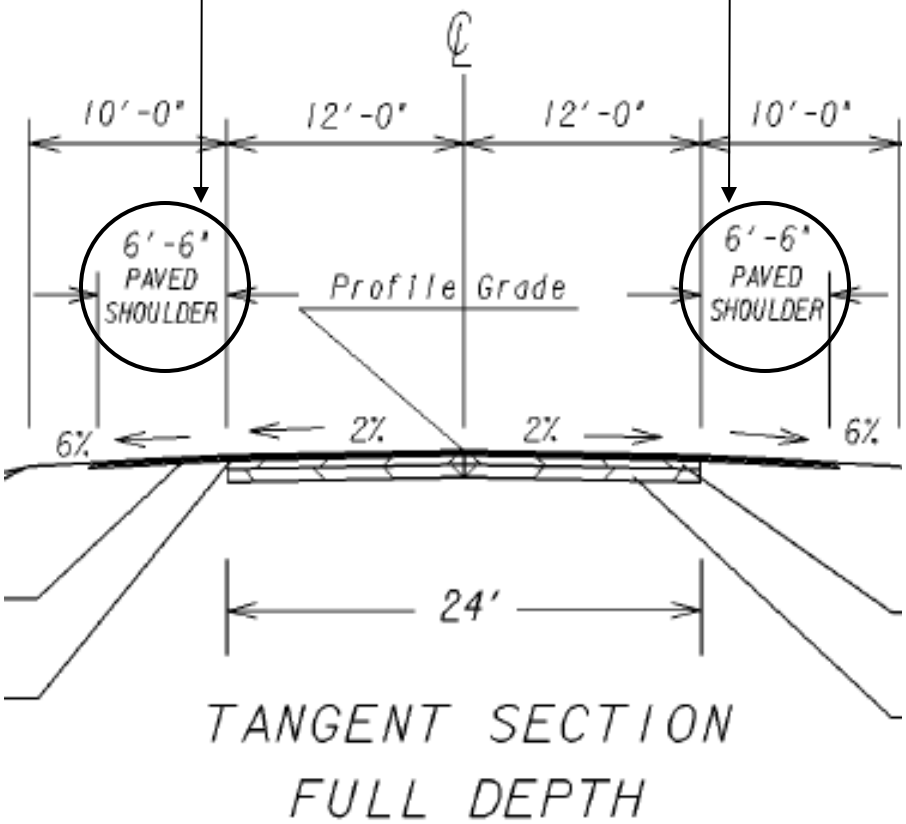

CALCULATIONS

PROPOSAL NUMBER:	R-6.1	PAGE NUMBER:	5 of 5

PROJECT #/PI #:	BRST0-0524-00(009) / 442951-

Current Design quantities:
6,250 LF of roadway
6,250 x 6.5' wide x 2 sides of road = 81,250 SF / 9 = 9,000 SY of shoulder

Proposed Change Quantities:
6,250 x 4' wide x 2 sides of road = 50,000 SF / 9 = 5,560 SY of shoulder

Current Design Cost:
2-layer asphalt
Top layer (135 lbs of 9.5 mm): 135 lbs/SY x 1 ton/2000 lbs x $78/ton = $5.27/SY
2nd layer (220 lbs of 19 mm): 220 lbs/SY x 1 ton/2000 lbs x $76/ton = $8.36/SY
6" GAB base course (note: base course not included in current design but VE Team believes it is appropriate for shoulder durability): $10.30/SY
Total cost: $5.27 + $8.36 + $10.30 = $23.93/SY

Proposed Change Cost:
2-layer asphalt plus GAB base
Top layer (135 lbs of 9.5 mm): 135 lbs/SY x 1 ton/2000 lbs x $78/ton = $5.27/SY
2nd layer (220 lbs of 19 mm): 220 lbs/SY x 1 ton/2000 lbs x $76/ton = $8.36/SY
6" GAB base course: $10.30/SY
Total cost: $5.27 + $8.36 + $10.30 = $23.93/SY

VALUE ENGINEERING PROPOSAL

PROPOSAL NUMBER:	R-10.0	PAGE NUMBER:	1 of 5

PROJECT #/PI #:	**BRST0-0524-00(009) / 442951-**
PROJECT TITLE:	**SR 234 over Chickasawhatchee Creek, Calhoun/Dougherty**

PROPOSAL DESCRIPTION: USE A 90˚ CULVERT IN LIEU OF THE SKEWED TRIPLE 9' X 6'REINFORCED CONCRETE BRIDGE CULVERT PLANNED AS AN OVERFLOW STRUCTURE AT APPROXIMATE STA 62+50.

ORIGINAL DESIGN: The current design includes a triple 9' x 6' reinforced concrete bridge culvert to replace the existing overflow culvert East of the bridge around Sta 62+50. Currently it is skewed from the outlet of the existing structure to an approximate location of the outfall channel. The culvert is approximately 135 feet in length.

PROPOSED CHANGE: It is proposed to use a 90˚ culvert at the approximate location in lieu of the skewed culvert with a length of approximately 85 feet.

JUSTIFICATION: The culvert operates as an overflow structure to connect one wetland on the North side to the one on the South side of the roadway without being in a defined channel; therefore, the exact location is not critical as long as a positive flow is provided. The inlet or the outlet or a combination of both can be shifted to provide a location for constructing a 90˚ culvert.
The Hydrologic and Hydraulic Study dated May 19, 2005 by URS Corporation shows a proposed 90˚ culvert on page 61 of that report.

ADVANTAGES:
- Reduces construction cost
- Simplifies construction

DISADVANTAGES:
- None apparent

	INITIAL COST	OPERATING COST	TOTAL LIFE-CYCLE COST
ORIGINAL DESIGN:	$ 256,070		$ 256,070
PROPOSED CHANGE:	$ 161,312		$ 161,312
SAVINGS:	$ 94,758		$ 94,758

COST ESTIMATING WORKSHEET

PROPOSAL NUMBER:	R-10.0	PAGE NUMBER:	2 of 5

PROJECT #/PI #:	BRST0-0524-00(009) / 442951-

ORIGINAL DESIGN

ITEM	SOURCE CODE	U/M	QTY	UNIT COST	TOTAL COST
500-3101 Class A Conc	1	CY	462	400	184,800
511-1000 Bar Reinf Steel	1	LBS	55243	.70	38,670
207-0203 Found Bkfill Matl	1	CY	652	50	32,600
SUBTOTAL – COST TO PRIME					256,070
MARKUP					--
TOTAL CONTRACT COST					**256,070**

PROPOSED CHANGE

ITEM	SOURCE CODE	U/M	QTY	UNIT COST	TOTAL COST
500-3101 Class A Conc	1	CY	291	400	116,400
511-1000 Bar Reinf Steel	1	LBS	34803	.70	24,362
207-0203 Found Bkfill Matl	1	CY	411	50	20,500
SUBTOTAL – COST TO PRIME					161,312
MARKUP					--
TOTAL CONTRACT COST					**161,312**

Difference [Original-Proposed] **94,758**

SOURCES

1. Project Cost Estimate
2. USC Estimate Database
3. GDOT Item Mean Summary
4. Means Estimating Manual
5. Richardson's Estimating Manual
6. Vendor (Specify)
7. Other (Specify)

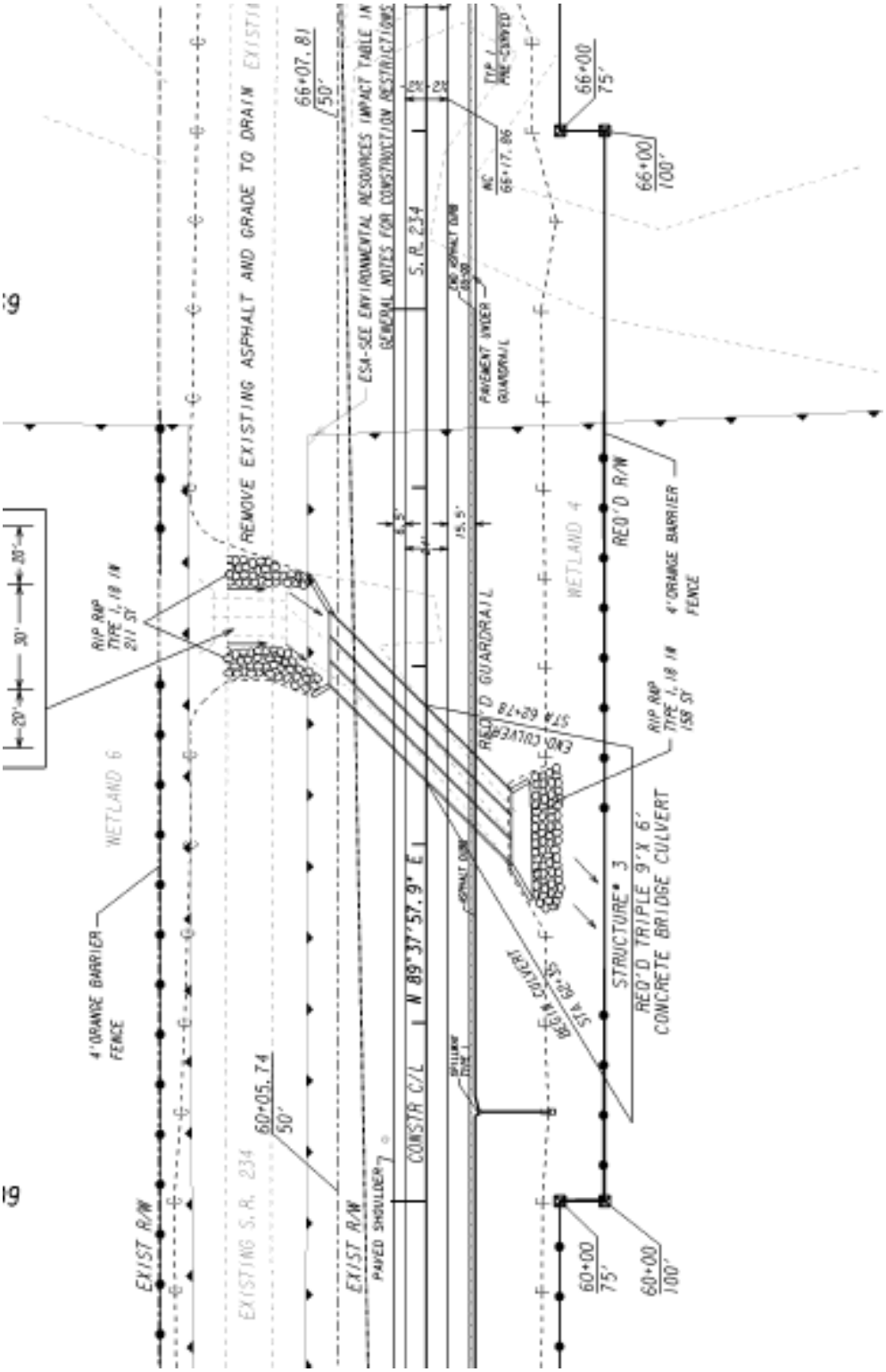

R-10.0 Original Design
3 of 5

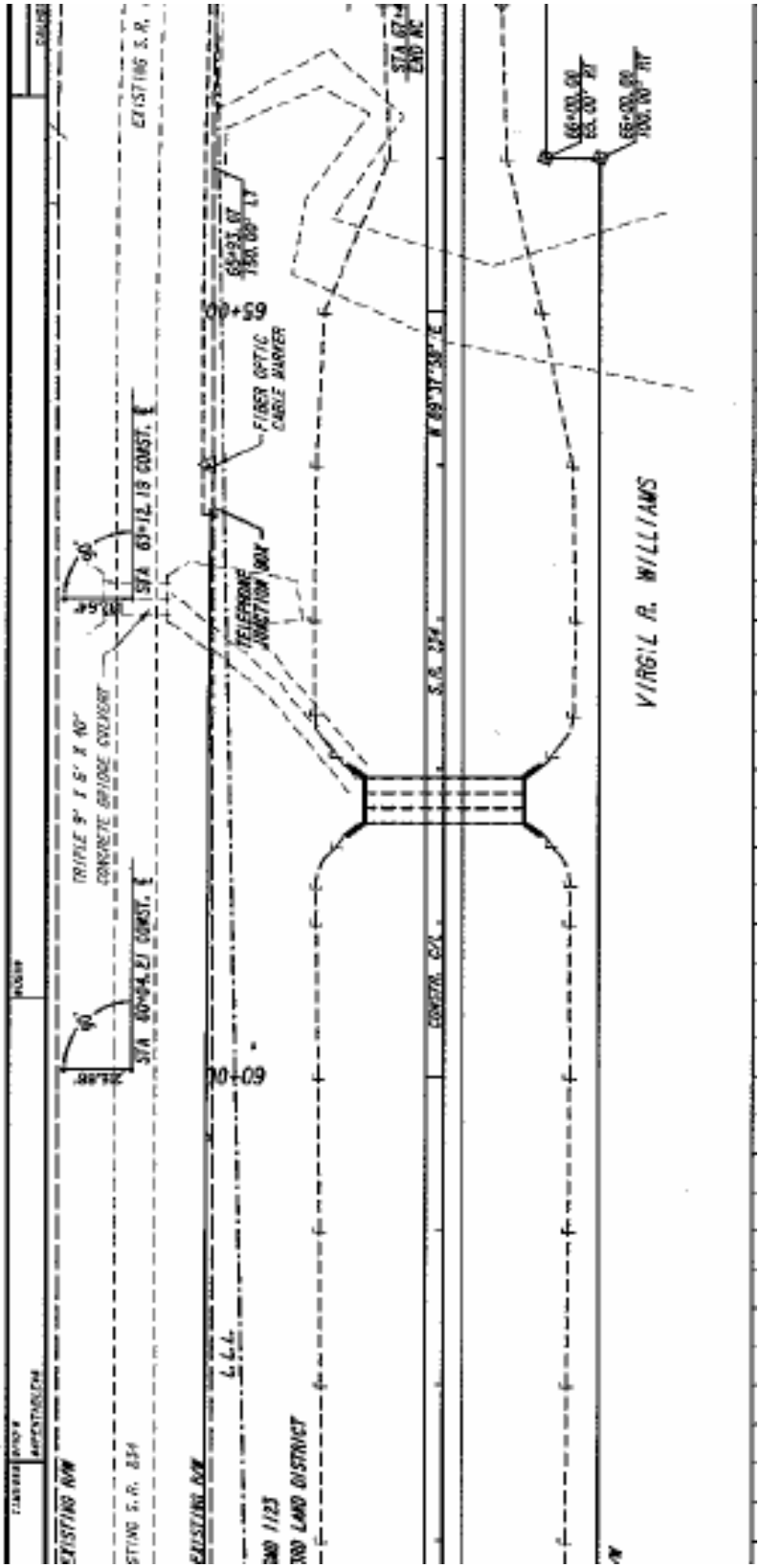

R-10.0 Proposed Change
4 of 5

CALCULATIONS

PROPOSAL NUMBER:	R-10.0	PAGE NUMBER:	5 of 5

PROJECT #/PI #:	BRST0-0524-00(009) / 442951-

Skewed culvert = approximately 135 LF
90˚ culvert = approximately 85 LF
85 / 135 = 63% of length and material will be required

Class A concrete = 462 CY original
Bar Reinf steel = 55243 Lbs original
Found Bkfill Matl = 652 CY original

462 CY x 63% = 291 CY required for 90˚ culvert
55243 Lbs x 63% = 34803 Lbs required for 90˚ culvert
652 CY x 63% = 411 CY required for 90˚ culvert

VALUE ENGINEERING PROPOSAL

PROPOSAL NUMBER:	R-11.0	PAGE NUMBER:	1 of 4

PROJECT #/PI #:	**BRST0-0524-00(009) / 442951-**
PROJECT TITLE:	**SR 234 over Chickasawhatchee Creek, Calhoun/Dougherty**

PROPOSAL DESCRIPTION: ELIMINATE THE WESTERN TRIPLE 10' X 6' OVERFLOW CULVERT PROPOSED AT APPROXIMATELY STA 41+00.

ORIGINAL DESIGN: In the current design, a triple 10' x 6' reinforced concrete bridge culvert is proposed as an overflow structure on the West side of the bridge at approximate Sta 41+00. There is not an existing overflow structure on the West side of the current bridge. The culvert was a result of the Hydrologic and Hydraulic Study dated May 19, 2005 by URS Corporation that was conducted using a proposed bridge length of 480 feet. The current proposed bridge is 550 feet in length and therefore an opening increase of 70 feet.

PROPOSED CHANGE: It is proposed to eliminate the new overflow culvert located West of the new bridge at approximately Sta 41+00.

JUSTIFICATION: As a result of the proposed bridge being 550' in lieu of 480' as was proposed when the Hydrologic and Hydraulic Study was completed, the addition of a second overflow structure should not be required.

ADVANTAGES:

- Reduces construction costs
- Removes a potentially unnecessary feature (due to bridge opening at stream being wider than originally planned)

DISADVANTAGES:

- May require a revision to the Hydrologic and Hydraulic Study

	INITIAL COST	OPERATING COST	TOTAL LIFE-CYCLE COST
ORIGINAL DESIGN:	$ 173,874		$ 173,874
PROPOSED CHANGE:	$ 0		$ 0
SAVINGS:	$ 173,874		$ 173,874

COST ESTIMATING WORKSHEET

PROPOSAL NUMBER:	R-11.0	PAGE NUMBER:	2 of 4

PROJECT #/PI #:	BRST0-0524-00(009) / 442951-

ORIGINAL DESIGN

ITEM	SOURCE CODE	U/M	QTY	UNIT COST	TOTAL COST
Culvert No 1	1	Total	EA	173,874	173,874
SUBTOTAL – COST TO PRIME					173,874
MARKUP				Incl.	--
TOTAL CONTRACT COST					**173,874**

PROPOSED CHANGE

ITEM	SOURCE CODE	U/M	QTY	UNIT COST	TOTAL COST
Delete Culvert No 1					
SUBTOTAL – COST TO PRIME					0.00
MARKUP				Incl.	--
TOTAL CONTRACT COST					**0.00**

Difference [Original-Proposed] **173,874**

SOURCES

1. Project Cost Estimate
2. USC Estimate Database
3. GDOT Item Mean Summary
4. Means Estimating Manual
5. Richardson's Estimating Manual
6. Vendor (Specify)
7. Other (Specify)

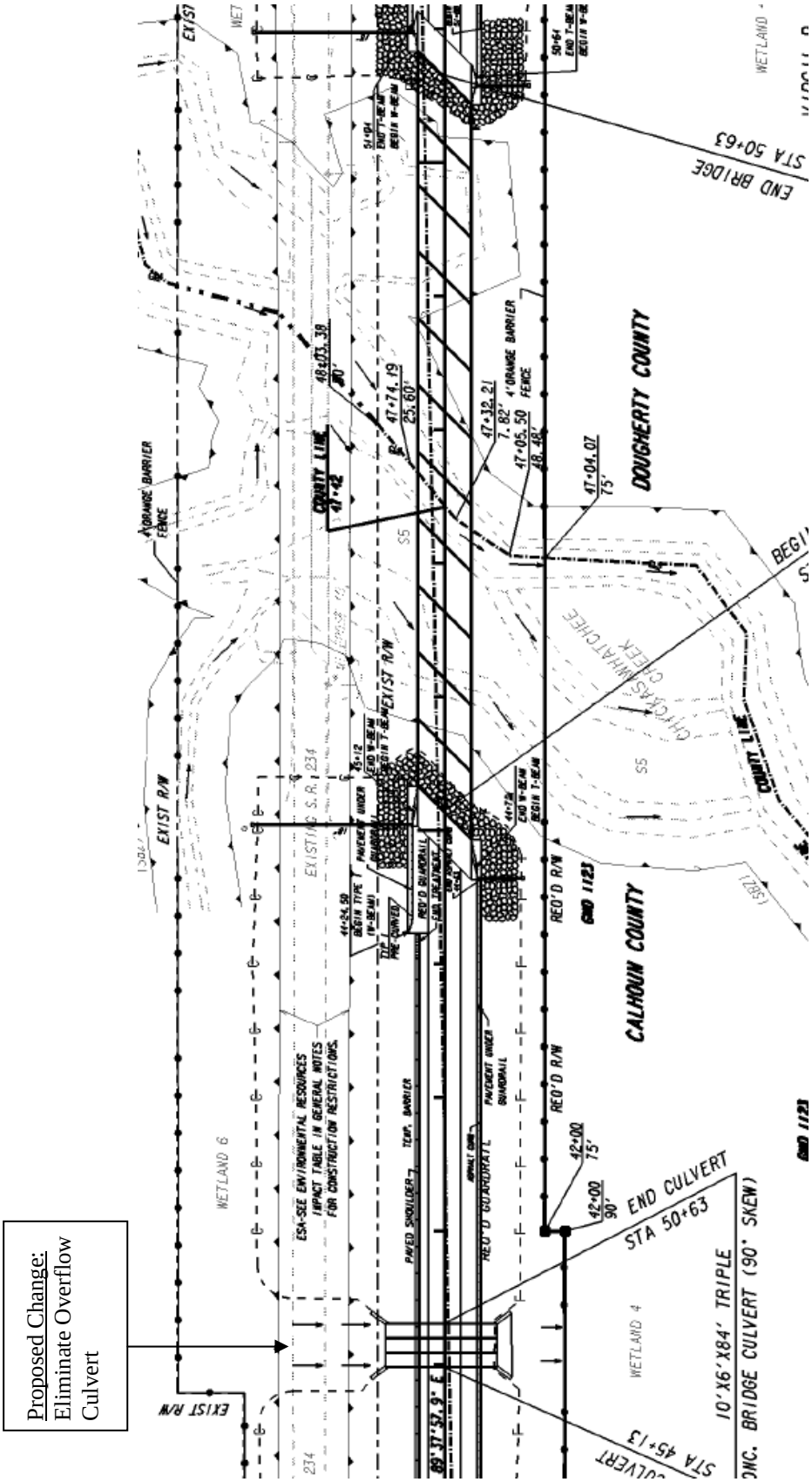

R-11.0 Proposed Change
3 of 4

CALCULATIONS

PROPOSAL NUMBER:	R-11.0	PAGE NUMBER:	4 of 4

PROJECT #/PI #:	BRST0-0524-00(009) / 442951-

Remove Culvert No 1. And the associated 5 pay items as shown on the project cost estimate with a total cost of $173,874

VALUE ENGINEERING PROPOSAL

PROPOSAL NUMBER:	R-14.0	PAGE NUMBER:	1 of 5

PROJECT #/PI #:	**BRST0-0524-00(009) / 442951-**
PROJECT TITLE:	**SR 234 over Chickasawhatchee Creek, Calhoun/Dougherty**

PROPOSAL DESCRIPTION: CONSTRUCT FILL SLOPES ON NORTH SIDE OF PROPOSED ROADWAY USING 4:1 SLOPES IN LIEU OF 2:1 SLOPES DURING STAGE CONSTRUCTION AND ELIMINATE THE NEED FOR TEMPORARY BARRIER.

ORIGINAL DESIGN: Stage 1 construction is to build the proposed roadway from the end of the bridge at Sta 50+63 to Sta 77+00 with a temporary 2:1 fill slope on the North or left side of the road with a temporary concrete barrier to protect the slope hazard.

PROPOSED CHANGE: It is proposed to construct temporary 4:1 slopes in lieu of the temporary 2:1 slopes and omit the requirement for any temporary concrete barrier.

JUSTIFICATION: Slopes constructed at 4:1 do not require slope protection.

ADVANTAGES:
- Reduces costs
- Less temporary barrier to maintain during construction

DISADVANTAGES:
- Possibility of vehicle traveling down slope

	INITIAL COST	OPERATING COST	TOTAL LIFE-CYCLE COST
ORIGINAL DESIGN:	$ 81,520		$ 81,520
PROPOSED CHANGE:	$ 28,060		$ 28,060
SAVINGS:	$ 53,460		$ 53,460

COST ESTIMATING WORKSHEET

PROPOSAL NUMBER:	R-14.0	PAGE NUMBER:	2 of 5

PROJECT #/PI #:	BRST0-0524-00(009) / 442951-

ORIGINAL DESIGN

ITEM	SOURCE CODE	U/M	QTY	UNIT COST	TOTAL COST
620-0100 Temp Barrier Method 1	1	LF	4076	$20	$81,520
SUBTOTAL – COST TO PRIME					$81,520
MARKUP				Incl.	--
TOTAL CONTRACT COST					**$81,520**

PROPOSED CHANGE

ITEM	SOURCE CODE	U/M	QTY	UNIT COST	TOTAL COST
620-0100 Temp Barrier Method 1	1	LF	1403	20	28,060
SUBTOTAL – COST TO PRIME					28,060
MARKUP				Incl.	--
TOTAL CONTRACT COST					**28,060**

Difference [Original-Proposed] **53,460**

SOURCES

1. Project Cost Estimate
2. USC Estimate Database
3. GDOT Item Mean Summary
4. Means Estimating Manual
5. Richardson's Estimating Manual
6. Vendor (Specify)
7. Other (Specify)

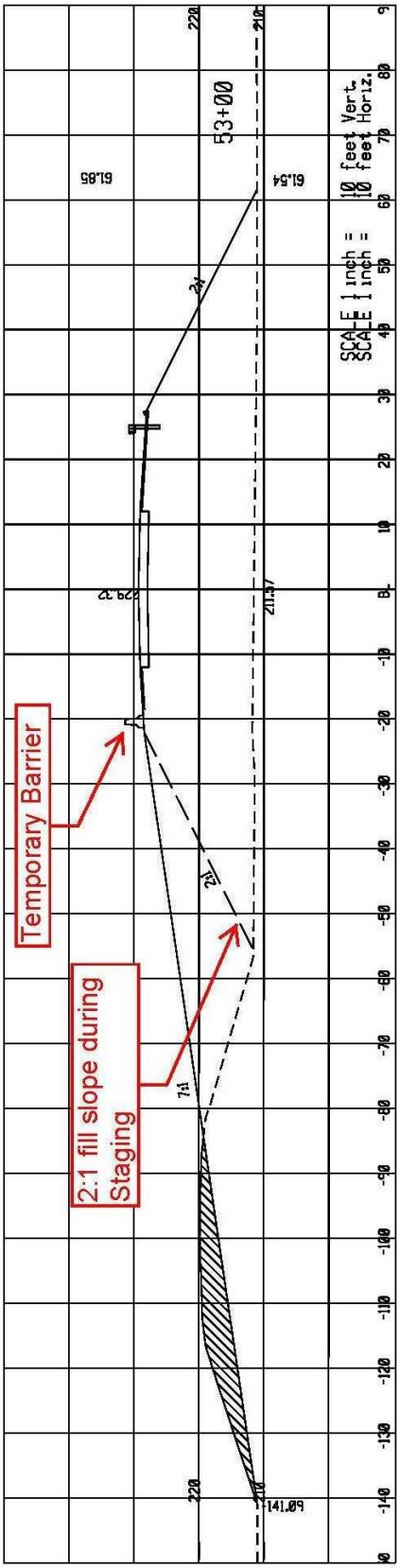

R-14.0 Original Design
3 of 5

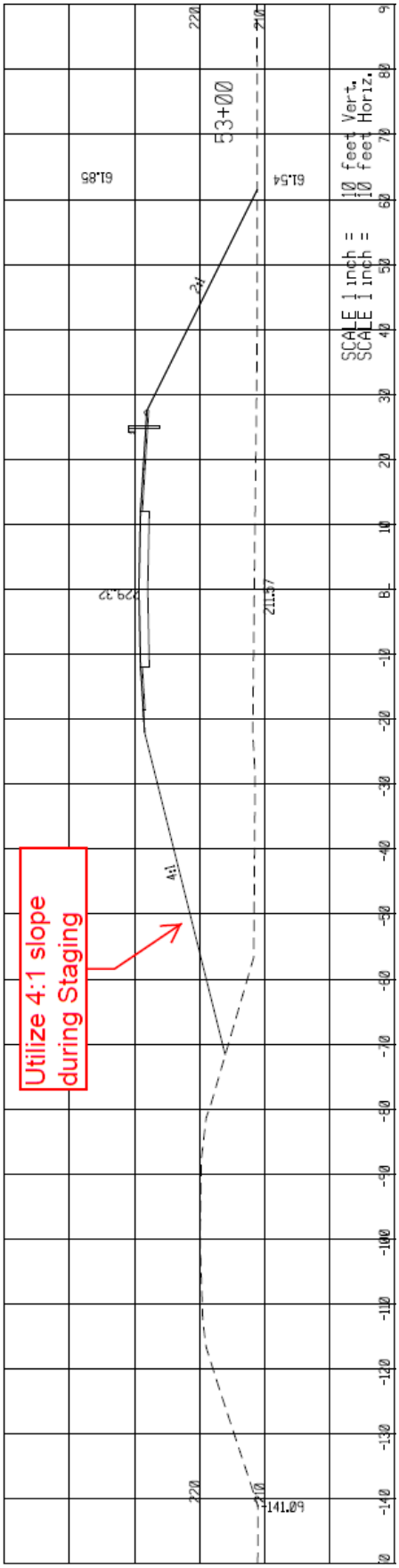

R-14.0 Proposed Change
4 of 5

CALCULATIONS

PROPOSAL NUMBER:	R-14.0	PAGE NUMBER:	5 of 5

PROJECT #/PI #:	BRST0-0524-00(009) / 442951-

Temp barrier stage 1 from Sta 50+63 to 77+00 = 2637 LF
Original quantity = 4076 LF
4076 LF – 2673 LF reduction of Temporary Concrete Barrier = 1403 LF new quantity

VE STUDY SIGN-IN SHEET

Project No.: BRST0-0524-00(009) County: Calhoun/Dougherty PI No.: 442951- Date: May 21-24, 2012

Days

FIRST	LAST	NAME	DOT OFFICE OR COMPANY	PHONE NUMBER	EMAIL ADDRESS
✓	✓	Lisa L. Myers	Engineering Services	404-631-1770	lmyers@dot.ga.gov
✓	✓	Matt Sanders	Engineering Services	404-631-1752	msanders@dot.ga.gov
✓	O	Melissa Harper	Construction	404-631-1971	mharper@dot.ga.gov
✓	O	Ken Werho	Traffic Operations	404-635-8144	kwerho@dot.ga.gov
✓	O	Bill DuVall	Bridge Design	404-631-1883	bduvall@dot.ga.gov
✓	✓	Lyn Clements	Bridge Design	404-631-1849	lclements@dot.ga.gov
✓	✓	Frank Scott	Environmental Services	404-631-1271	fscott@dot.ga.gov
✓	✓	Tom Orr	US Cost	770-481-1638	torr@uscost.com
✓	✓	Jerry Brooks	Kimley-Horn	678-502-1864	jerry.brooks@kimley-horn.com
✓	✓	Lenor Bromberg	KEA Group	404-805-8244	lbromberg@keagroup.com
✓	✓	Ashley Zellner	LPA Group	770-263-9118	azellner@lpagroup.com
O	✓	Sharilyn Meyers	Environmental Services	404-631-1594	smeyers@dot.ga.gov
✓	✓	James (Mike) Popp	D4 Design	229-386-3031	mpopp@dot.ga.gov
✓	✓	Randy Rathburn	Program Delivery	912-389-4201	rrathburn@dot.gov
✓	✓	Brent Thomas	D4 Precon. Engineer	229-386-3300	bthomas@dot.ga.gov
✓	✓	Ralph Sandy Griffin	D4 Dist. Design Eng.	229-386-3618	sgriffin@dot.ga.gov
✓	✓	Joe Sheffield	D4 District Engineer	229-386-3280	josheffield@dot.ga.gov
✓	✓	Ken Cheek	D4 Utility Engineer	229-386-3288	kcheek@dot.ga.gov
✓	O	Scott Chambers	D4 Construction Eng.	229-386-3304	schambers@dot.ga.gov
✓	O	Tony Cravey	D4 Area Construction	229-386-3304	tcravey@dot.ga.gov

✓ Check those who attended

O Did Not Attend

11 Attended Project Overview (Day 1)
8 Attended Via Video District #4
19 Total (Day 1)

9 Attended Project Presentation (Day 4)
6 Attended Via Video District #4
15 Total (Day 4)

FUNCTION ANALYSIS

The following functions for the SR 234 Over Chickasawhatchee Creek project were identified during discussions with the VE participants on the first day of the study. These two-word functions consist of an active verb, and a quantifiable (measurable) noun. The functions represent the proposed capital improvement expenditures of the project, and assist the V.E. team in becoming familiar with the needs and long-term goals for the project. The Basic Function of the project is to "Replace (Deficient) Bridge". The following are considered by the V.E. team to be Secondary and Supporting Functions.

Verb	Noun		Verb	Noun
Eliminate	Weave		Demolish	Roadway
Increase	(Load) Capacity		Re-establish	Vegetation
Upgrade	Bridge Standards		Clear	Trees
Maintain	Access		Support	Vehicles
Support	Commerce		Award	Contract
Span	Water		Control	Erosion
Control	Traffic		Protect	Travelers
Demolish	Structures		Support	Roadway
Minimize	Impacts		Drain	Subgrade
Convey	Drainage		Convey	Overflows
Maintain	Traffic		Install	Signage
Excavate	Earth			

COST MODEL/DISTRIBUTION

SR 234 Over Chickasawhatchee Creek
Calhoun/Dougherty Counties, Georgia

ITEM	COST $	% OF TOTAL
EARTHWORK	2,403,562	27.90%
BRIDGES/STRUCTURES	1,558,265	18.09%
GRANULAR EMBANKMENT	1,513,665	17.57%
ASPHALT CONCRETE PAVING	1,031,966	11.98%
CULVERTS	438,438	5.09%
RIGHT-OF-WAY	350,000	4.06%
GRASSING/EROSION CONTROL	309,098	3.59%
TRAFFIC CONTROL	230,550	2.68%
AGGREGATE BASE COURSE	212,520	2.47%
DEMOLITION	210,500	2.44%
EMBANKMENT STABILIZATION FABRIC	154,506	1.79%
GUARDRAILS	65,761	0.76%
CONCRETE SLABS/APRONS/MEDIANS	57,883	0.67%
DRAINAGE SYSTEM	30,704	0.36%
CURB & GUTTER	29,358	0.34%
SIGNAGE/MARKING	19,493	0.23%
CLEARING AND GRUBBING	0	0.00%
SIDEWALKS	0	0.00%
SIGNALS	0	0.00%
***TOTAL - PROJECT**	**8,616,269**	**100.00%**
*Does not include Engrg & Inspection, Fuel Adjustment or Liquid AC Adjustment		

BRAINSTORMING OR SPECULATION IDEAS

PROJECT TITLE: **SR 234 OVER CHICKASAWHATCHEE CREEK**

PROJECT LOCATION: **CALHOUN/DOUGHERTY COUNTIES, GEORGIA**

NO.	IDEA	RANK
	ROADWAY (R)	
1.0	Shift Horizontal Alignment to 60’ Offset (Centerline-to-Centerline) in lieu of Current 100’ Offset	4
1.1	Shift Horizontal Alignment to 40’ Offset (Centerline-to-Centerline) in lieu of Current 100’ Offset	4
2.0	Lower Vertical Profile by 4 feet	5
3.0	Shorten Horizontal Curves at Tie-ins	3
4.0	Use Side Slopes Between 2:1 and 4:1	5
5.0	Utilize an Off-site Detour and Construct Road on Existing Alignment	2
6.0	Reduce Width of Paved Shoulder from 6.5’ to 2’	4
6.1	Reduce Width of Paved Shoulder from 6.5’ to 4’	4
7.0	Reduce Width of Right-of-Way and Use Construction Easements	3
8.0	Build a Temporary Bridge and Stage Construction – Road Remains on Current Alignment	3
9.0	Use Bottomless Culvert in Lieu of Triple Box Culvert (Note: after investigating, determined to not be advantageous over current design)	Drop
10.0	Use 90-degree Culvert in Lieu of Skewed Culvert on Eastern End	4
11.0	Eliminate New Westernmost Bridge Culvert	4
12.0	Build in Stages – Eastern End of Road in Phase 1 Then Use Earth from Existing Road for Fill on Western End	Contr Option
13.0	Stage Construction – Build ½ of Bridge and Maintain Traffic	2
14.0	Eliminate Temporary Barrier Along Northern Edge of New Road	4
15.0	Eliminate Requirement for Unsuitable Soil Removal Between Sta 19+50 and 25+00 (Seems to be based on report from Old Alignment with 210’ offset)	Comment
16.0	Construct Bridge from Sta 40+00 to Sta 65+00	1

BRAINSTORMING OR SPECULATION IDEAS

PROJECT TITLE: **SR 234 OVER CHICKASAWHATCHEE CREEK**

PROJECT LOCATION: **CALHOUN/DOUGHERTY COUNTIES, GEORGIA**

NO.	IDEA	RANK
	BRIDGE (B)	
1.0	Use 8-Span Bridge (50'-6@75'-50') in lieu of 11 Spans at 50'.	5
1.1	Use 5-Span Bridge at 110' in lieu of 11 Spans at 50'	4
1.2	Use 3-Span Bridge at 183' in lieu of 11 Spans at 50'	4
2.0	Shorten Bridge to Span Main Creek Limits (Approx. 125' Reduction) [Note: after investigating, determined that could not fill in backwash area due to environmental reasons]	Drop
3.0	Perform Updated Bridge Evaluation; if less than 50.0 submit for additional bridge replacement funds.	Comment
4.0	Use 4,000 psi Concrete for Deck and Reduce Thickness	4t
5.0	Explore Alternate Beam Types and Use Fewer Beams per Span	4
6.0	Re-locate Expansion Joint and Tower Bent to Reduce the Number of Required Pilot Holes	5
7.0	Install Deck Drainage System on Bridge and Pipe to Bioswale	Comment

VALUE ENGINEERING WORKSHOP AGENDA

For

GEORGIA DEPARTMENT OF TRANSPORTATION

Project #: BRST0-0524-00(009) - PI#: 442951-
SR 234 over Chickasawhatchee Creek

28 HOUR - V.E. STUDY
21-24 May 2012

The value engineering workshop for the subject project will be conducted for 3-1/2 days from 21-24 May 2012, **in the Engineering Services Conference Room (5CR1L2) on the 5th floor of the GDOT General Office Facility located at 600 W. Peachtree Street NW, Atlanta GA 30308; POC – Matt Sanders @ (404)631-1752 voice**

Pre-workshop Activities

The V.E. Team Leader coordinates logistics with GDOT, and confirms project objectives and any unique requests, and develops a cost model for the project. The V.E. Team receives and reviews all project documents.

MONDAY

0800 - 0900	**V.E. Team Introduction Phase**	Tom Orr, P.E., CVS Team Leader, U.S. Cost, Inc. **(V.E. Team Only)**

The VETL will review previous events along with activities planned for the week and outline several areas which may be investigated by the V.E. team.

The team members will discuss their initial impression and understanding of the project with other team members based on their pre-study review of the project plans, cost estimates, and available calculations. The V.E. Team Leader will provide cost models, and cost bar graphs to help the team identify the high-cost features of the project.

0900 - 1100	**Project Design Briefing**	V.E. Team; A/E, GDOT

The A/E project design manager will discuss the project constraints/requirements and the proposed design solution(s) in detail. The V.E. team members will ask questions as appropriate to completely understand the project requirements and the proposed design solution (both alternatives considered and those recommended by the design team).

MONDAY (CONTINUED)

1100 - 1200 **Function Analysis Phase** V.E. Team

The V.E. team will discuss the required functions of the project. The project cost model will be analyzed to identify functions provided by all project features.

1200 - 1300 **Lunch**

1300 - 1600 **Creative Phase** V.E. Team

The V.E. team will creatively review, Brainstorm, and tabulate possible design alternatives for the project. While the designer's solution will serve as the "baseline", the team will identify alternatives not in the recommended solution, but deserving of further investigation. Each project feature will be carefully analyzed with the basic questions in mind:

What is the system/item?
What does it do (what is its basic function)?
What must it do?
What does it cost?
What is the item worth?
What else will do the same, or a better job?
What does that alternative cost?

During the creative phase, the team will not judge the ideas. The essential requirements for the project, however, must always be considered.

1600 - 1700 **Analysis Phase** V.E. Team

During this phase, all of the ideas or alternatives will be ranked according to their potential for life-cycle (25-year) cost reduction and the potential for acceptance by GDOT, Engineering Designers, and other appropriate parties.

TUESDAY

0800 - 1700 **Development Phase** V.E. Team

During the development phase, each team member will gather information and prepare written proposals for those ideas assigned to him/her. These may require additional discussions with the designer, GDOT representatives, outside contractors and suppliers, and other specialists to fully define the alternative. The team members will prepare sketches, perform calculations and develop other data to support each proposal. In addition, each team

member will prepare estimates of costs for each alternative as originally designed, and as proposed by the V.E. team.

WEDNESDAY		
0800 - 1200	**Development Phase**	V.E. Team
1200 - 1300	Lunch	
1300 - 1700	**Development Phase & Quality Review**	V.E. Team
THURSDAY		
0800 – 0900	**Prepare for Presentation**	V.E. Team
0900 – 1000	**V.E. Presentation**	V.E. Team Members, Design Team & GDOT Reps

The Value Engineering Team will present the proposals developed in the course of the study to the design team representatives and any participating stakeholders. The intent of the presentation is to give a clear understanding of the basis of the proposals rather than to reach a conclusion as to their acceptability. A summary table of results will be distributed at the presentation. The formal V.E. Reports will be issued within 8 business days of the workshop conclusion.

1000 – 1200	**V.E. Team Wrap-up & Final QC/QA**	V.E. Team Members only

The Value Engineering Team will have a wrap-up session consisting of a final review of proposals to ensure consistency and clarity of content.