ORIGINAL TO GENERAL FILES

DEPARTMENT OF TRANSPORTATION
STATE OF GEORGIA

OFFICE OF DESIGN POLICY & SUPPORT
INTERDEPARTMENTAL CORRESPONDENCE

FILE P.I. # 0010939
Cobb County
GDOT District 7 - Metro Atlanta
SR 3 @ SR 92 Intersection Improvements

OFFICE Design Policy & Support

DATE June 11, 2014

FROM for Brent Story, State Design Policy Engineer

TO SEE DISTRIBUTION

SUBJECT **APPROVED CONCEPT REPORT**

Attached is the approved Concept Report for the above subject project.

Attachment

DISTRIBUTION:

Glenn Bowman, Director of Engineering
Joe Carpenter, Director of P3/Program Delivery
Genetha Rice-Singleton, Assistant Director of P3/Program Delivery
Albert Shelby, State Program Delivery Engineer
Bobby Hilliard, Program Control Administrator
Cindy VanDyke, State Transportation Planning Administrator
Hiral Patel, State Environmental Administrator
Ben Rabun, State Bridge Engineer
Kathy Zahul, State Traffic Engineer
Angela Robinson, Financial Management Administrator
Lisa Myers, State Project Review Engineer
Charles "Chuck" Hasty, State Materials Engineer
Mike Bolden, State Utilities Engineer
Paul Tanner, Asst. State Transportation Data Administrator
Attn: Systems & Classification Branch
Jeff Fletcher, Statewide Location Bureau Chief
Emmanuella Myrthil, State Safety Program Coordinator
Rachel Brown, District Engineer
Scott Lee, District Preconstruction Engineer
Patrick Allen, District Utilities Engineer
Peter Emmanuel, Project Manager
BOARD MEMBER - 11th Congressional District

DEPARTMENT OF TRANSPORTATION
STATE OF GEORGIA

LIMITED SCOPE PROJECT CONCEPT REPORT

Project Type:	Intersection Improv.	P.I. Number:	0010939
GDOT District:	7	County:	Cobb
Federal Route Number:	US 41	State Route Number:	SR 92/SR 3

Intersection Improvement of US 41/Cobb Parkway and SR 92/Dallas Acworth Highway

Submitted for approval:

Local Government — DATE: 3-14-14

Consultant Designer & Firm — DATE: 3-12-14

GDOT Project Manager — DATE: 3-21-14

State Program Delivery Engineer — DATE: 3-24-14

Recommendation for approval:

* Hiral Patel / KLP — State Environmental Administrator — DATE: 4-16-14

* Kathy Zahul / KLP — State Traffic Engineer — DATE: 4-8-14

The concept as presented herein and submitted for approval is consistent with that which is included in the Regional Transportation Plan (RTP) and/or the State Transportation Improvement Program (STIP).

State Transportation Planning Administrator — DATE: 4-1-14

* Recommendation on file

Approval:

Concur: GDOT Director of Engineering — DATE: 6/6/14

Approve: GDOT Chief Engineer — DATE: 6/6/14

PROJECT LOCATION

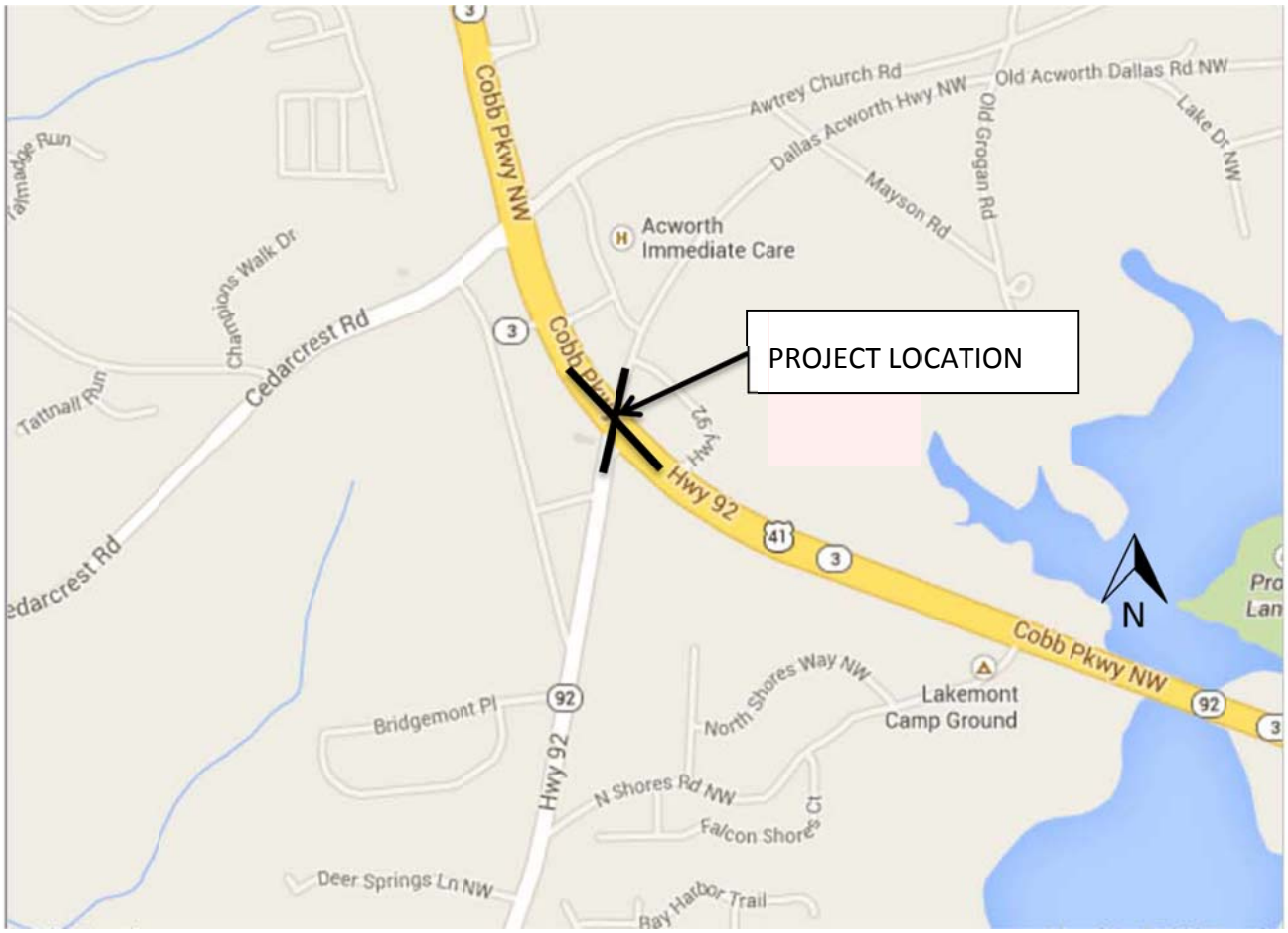

PI Number	0010939
County	Cobb Counties
Description	US 41/Cobb Pkwy and SR 92/Dallas Acworth Hwy intersection improvements

PLANNING & BACKGROUND DATA

Project Justification Statement:

The proposed project will mitigate risk and improve operational efficiency at the intersection of US 41/SR 3/Cobb Parkway and SR 92/Old Acworth Dallas Road/Dallas Acworth Highway in Cobb County, GA. In Georgia, nearly a third of fatal crashes occur at intersections making reducing crash frequency and severity at intersections a focus area for the Georgia Department of Transportation. The project will change the north bound approach protected/permissive single turn lane into a protected only dual turn lane. Nationally intersection crashes account for 40% of all reported crashes and approximately 20% of traffic fatalities.

In the project area US 41/SR 3/Cobb Parkway is a four lane grass median divided urban minor arterial with a posted speed limit of 55 mph and an ADT of 38,770 vehicles per day. SR 92/Old Acworth Dallas Road/Dallas Acworth Highway is a two lane urban minor arterial with a posted speed limit of 45 mph and an ADT of 18,710 vehicles per day. Currently the signalized intersection has offset left turn lanes as well as right turn lanes on SR 3 and right turn lanes on SR 92.

Crash data from 2006-2010 indicated that 56 crashes occurred between northbound cars on SR 3 turning left onto westbound SR 92 and southbound cars on SR 3 resulting in 23 total injuries. Studies have shown that changing the left turn phase from protected/permissive to protected only results in nearly a 90% reduction in left turn crashes on treated approaches.

The purpose of the improvement project is to:

- Mitigate risk and improve operational efficientcy at the proposed intersection.
- Provide improved transportation options for the traveling public; through the improvements of new crosswalks, new pedestrian and traffic signalization and providing new associated pavement markings and signage.

Description of the proposed project: This project proposes to expand the capacity of the existing intersection to handle the existing and future traffic needs by adding a dual left turn lane from US 41 northbound onto SR 92 southbound. SR 92 southbound will be widened to two lanes for 1000 ft then tapered into one lane at Acworth Dallas Rd. SR 92 northbound will be widened for an exclusive right turn lane. US 41 southbound existing exclusive right turn lane will be extended for an additional 800 ft to accommodate right turn storage at the intersection. Other intersection improvements include new crosswalks, new pedestrian and traffic signalization, resurfacing of the intersection, and associated pavement markings and signage. The posted speed limits are 45MPH for SR 92 and 55MPH for US 41. The existing right of way for both SR 92 and US 41 varies from 100 to 220 feet. Limited additional right of way will be required for this intersection improvement.

Federal Oversight: ☒ Exempt ☐ State Funded ☐ Other

MPO: Atlanta Regional Commission (ARC) MPO Project ID: Lump

Regional Commission: Atlanta Regional Commission RC Project ID

Congressional District(s): 11

Projected Traffic: ADT
US 41: Current Year (2013): 38,770 Open Year (2017): 44,480 Design Year (2037): 88,490
SR 92: Current Year (2013): 18,710 Open Year (2017): 21,480 Design Year (2037): 42,730

Traffic Projections Performed by: Arcadis

Functional Classification (Mainline): Urban Minor Arterial Street

Is this a 3R (Resurfacing, Restoration, & Rehabilitation) Project? ☒ No ☐ Yes

Will Context Sensitive Solutions procedures be utilized? ☒ No ☐ Yes

DESIGN AND STRUCTURAL DATA –

Mainline Design Features: *US 41/Cobb Parkway*

Feature	Existing	Standard*	Proposed
Typical Section			
- **Number of Lanes**	**4**	**4**	**4**
- **Lane Width(s)**	**12'**	**12'**	**12'**
- **Median Width & Type**	**24' raised/44' depressed ****	**24' raised**	**24' raised/44' depressed ****
- **Outside Shoulder or Border Area Width**	**10'**	**16'**	**16'**
- **Outside Shoulder Slope**	**2%**	**2%**	**2%**
- **Inside Shoulder Width**	**None**	**None**	**None**
- **Sidewalks**	**5'**	**5'**	**5'**
- **Auxiliary Lanes**	**LT/RT turns**	**LT/RT turns**	**Dual LT turns**
- **Bike Lanes**	**None**	**None**	**None**
Posted Speed	**55 mph**		**55 mph**
Design Speed	**55 mph**	**55 mph**	**55 mph**
Min Horizontal Curve Radius	**N/A**	**1187'**	**N/A**
Superelevation Rate	**Normal crown**	**4%**	**Normal crown**
Grade	**6%**	**6%**	**6%**
Access Control	**None**	**None**	**None**
Right-of-Way Width	**200'**	**200'**	**200'**
Maximum Grade – Crossroad	**2%**	**6%**	**2%**
Design Vehicle	**WB 67**	**WB 67**	**WB 67**
Additional Items as needed			

*According to current GDOT design policy if applicable
**US41/Cobb Pkwy consists of a 44' depressed median/24' raised median in areas with left turn lanes.

Mainline Design Features: *SR92/Cedarcrest Rd.*

Feature	Existing	Standard*	Proposed
Typical Section			
- **Number of Lanes**	**2**	**2**	**2**
- **Lane Width(s)**	**12'**	**12'**	**12'**
- **Median Width & Type**	**None**	**20' raised**	**None**
- **Outside Shoulder or Border Area Width**	**10'**	**16'**	**16'**
- **Outside Shoulder Slope**	**2%**	**2%**	**2%**
- **Inside Shoulder Width**	**None**	**None**	**None**
- **Sidewalks**	**None**	**5'**	**5'**
- **Auxiliary Lanes**	**LT/RT turns**	**LT/RT turns**	**LT/RT turns**
- **Bike Lanes**	**None**	**None**	**None**
Posted Speed	**45 mph**		**45 mph**
Design Speed	**45 mph**	**45 mph**	**45 mph**
Min Horizontal Curve Radius	**N/A**	**711'**	**N/A**
Superelevation Rate	**Normal crown**	**4%**	**Normal crown**
Grade	**6%**	**6%**	**6%**
Access Control	**None**	**None**	**None**
Right-of-Way Width	**100'**	**100'**	**100'**
Maximum Grade – Crossroad	**2%**	**6%**	**2%**
Design Vehicle	**WB 67**	**WB 67**	**WB 67**
Additional Items as needed			

*According to current GDOT design policy if applicable

Major Structures: *N/A*

Major Interchanges/Intersections: US 41/Cobb Parkway at SR 92/Dallas Acworth Highway

Utility Involvements: Georgia Power Company - Distribution, Georgia Power Company – Transmission, Cobb EMC, Fiberlight LLC, AT&T, TW Telecom, XO Communications, MCI Fiber (Verizon), Georgia Department of Transportation, Cobb County Water System (water and sewer), City of Marietta (water and sewer), Comcast, Atlanta Gas Light, Marietta Power, Tower Cloud, Cobb County Traffic Fiber

Public Interest Determination Policy and Procedure recommended (Utilities)? ☒ No ☐ Yes

SUE Required: ☒ No ☐ Yes

Railroad Involvement: None

Complete Streets - Bicycle, Pedestrian, and/or Transit Warrants:

Warrants met: ☐ None ☐ Bicycle ☒ Pedestrian ☒ Transit

Right-of-Way:

Required Right-of-Way anticipated: ☐ No ☒ Yes ☐ Undetermined

Easements anticipated: ☐ None ☒ Temporary ☒ Permanent ☐ Utility ☐ Other

Anticipated number of impacted parcels:		9
Displacements anticipated:	Total:	0
	Businesses:	0
	Residences:	0
	Other:	NA

Transportation Management Plan [TMP] Required: ☐ No ☒ Yes

If Yes: Project classified as: ☒ Non-Significant ☐ Significant

TMP Components Anticipated: ☒ TTC ☐ TO ☐ PI

Design Exceptions to FHWA/AASHTO controlling criteria anticipated: None

Design Variances to GDOT Standard Criteria anticipated: Median width for SR92

ENVIRONMENTAL DATA

Anticipated Environmental Document:

GEPA: ☐ **NEPA:** ☐ CE ☒ PCE

Project Air Quality:

Is the project located in a PM 2.5 Non-attainment area? ☐ No ☒ Yes

Is the project located in an Ozone Non-attainment area? ☐ No ☒ Yes

Is a Carbon Monoxide hotspot analysis required? ☐ No ☒ Yes

MS4 Compliance – Is the project located in an MS4 area? ☐ No ☒ Yes

Environmental Permits/Variances/Commitments/Coordination anticipated: NPDES(NOI is required).

NEPA/GEPA Comments & Information: Programmatic Categorical Exclusion is anticipated.

PROJECT RESPONSIBILITIES

Project Activities:

Project Activity	Party Responsible for Performing Task(s)
Concept Development	CCDOT/URS Corporation
Design	CCDOT/URS Corporation
Right-of-Way Acquisition	CCDOT
Utility Relocation	Utility Owners
Letting to Contract	CCDOT
Construction Supervision	CCDOT
Providing Material Pits	Construction Contractor
Providing Detours	CCDOT-none anticipated
Environmental Studies, Documents, and Permits	CCDOT/URS Corporation
Environmental Mitigation	CCDOT/URS Corporation
Construction Inspection & Materials Testing	CCDOT

Lighting required: ☒ No ☐ Yes

Other projects in the area:

- GDOT – PI# 0006866 – SR 92 from Old Burnt Hickory Rd to US41/Cobb Pkwy
- GDOT – PI# 0012754 – SR 3 @ CR8/Cedarcrest Rd./Awtrey Church Rd
- Cobb County DOT – PI# 0009322 - 3rd Army Road

Other coordination to date: None

Project Cost Estimate and Funding Responsibilities:

	Breakdown of PE	ROW	Reimbursable Utility	CST*	Environmental Mitigation	Total Cost
By Whom	CCDOT	CCDOT	CCDOT	GDOT/CCDOT	N/A	
$ Amount	$242,508	$1,595,000	$0	$1,128,310	TBD	$2,965,818
Date of Estimate	9/12/2013	4/29/2014	5/1/2014	1/2/2014		

*CST Cost includes: Construction, Engineering and Inspection, and Liquid AC Cost Adjustment.

ALTERNATIVES

Preferred Alternative: The proposed intersection improvements for the preferred alternative include:

- Increasing the single left turn lane on the northbound approach to dual left turn lanes
- Adding dual left turn lanes on the eastbound approach
- Converting the existing through lane on the eastbound approach to a shared through/channelized right turn lane to create dual channelized and signalized right turn lanes
- Altering the eastbound approach lanes to accommodate the new turning lanes and future driveway access
- Extending the second westbound receiving lane by removing the island at the driveway entrance
- Retain existing ingress/egress for all driveways

Estimated Property Impacts:	**9**	**Estimated CST Cost:**	**$1,128,310**
Estimated ROW Cost:	**$1,595,000**	**Estimated CST Time:**	

Rationale: Intersection capacity analysis was completed using Synchro and found to be the same as the existing condition at LOS F. However, the results show that the total delay is significantly reduced from the no-built condition. The overall intersection delay is significantly reduced in the future build scenarios particularly due to the increased capacity on the northbound left and the eastbound right movements, which currently experience heavy congestion in the exiting conditions. This alternative also has minimal ROW impacts and construction cost.

Alternative 1: This proposed intersection improvement concept is similar to Preferred Alternative except that the eastbound approach will have extended left turn bays and will include a raised median to control access.

Estimated Property Impacts:	**7**	**Estimated CST Cost:**	**$1,014,343**
Estimated ROW Cost:	**Unknown**	**Estimated CST Time:**	

Rationale: Intersection capacity analysis was completed using Synchro and found to be the same as the existing condition at LOS F. However, the results show that the total delay is significantly reduced from the no-built condition. The overall intersection delay is significantly reduced in the future build scenarios particularly due to the increased capacity on the northbound left and the eastbound right movements, which currently experience heavy congestion in the exiting conditions. This alternative also has more ROW impact than the Preferred Alternative, and is therefore not preffered.

Alternative 2: This alternative investigates the types of alternative intersection designs that may benefit operations at the study intersection, a planning-level analysis of the study intersection was completed using the Federal Highway Administration's (FHWA) CAP-X spreadsheet tool. The FHWA CAP-X spreadsheet tool was used to conduct an intersection capacity analysis using the projected design year intersection volumes and to recommend alternative intersection designs that may improve operations at the study intersection. The top three recommended alternative intersection designs included a Full Displaced Left Turn, a Partial Displaced Left Turn N-S, or a Restricted Crossing U-Turn N-S intersection based on AM peak design year volumes and included a Quadrant Roadway S-E, a Partial Displaced Left Turn N-S, or a Full Displaced Left Turn based on PM peak design year volumes.

Estimated Property Impacts:	**6 to 10**	**Estimated CST Cost:**	**$3M to $5M**
Estimated ROW Cost:	**Unknown**	**Estimated CST Time:**	

Rationale: Because the Full Displaced Left Turn and the Partial Displaced Left Turn N-S intersections were recommended for both AM and PM peak volumes, specific lane geometries were investigated for these two intersection designs using the FHWA CAP-X spreadsheet tool. The volume-to-capacity (V/C) ratios for the two alternative intersection designs were 1.03 (AM Peak) and 1.02 (PM Peak) for the Full Displaced Left Turn intersection design and were 1.10 (AM Peak) and 1.11 (PM Peak) for the Partial Displaced Left Turn N-S intersection design. Although these two alternatives are expected to reduce delay at the intersection, the intersection is still expected to be performing at a failing level of service for both peak periods in open year and design year. Due to the increased right of way impacts, utility impacts and construction costs as compared to the preferred alternative is therefore considered not preferred.

Alternative 3: To improve the V/C ratio, the FHWA CAP-X tool was again used to evaluate the grade separated intersection design, and highlighted a partial cloverleaf (E-W) intersection as the best grade separated design for this intersection based on design year volumes.			
Estimated Property Impacts:	**7**	**Estimated CST Cost:**	**$50,314,190**
Estimated ROW Cost:	**Unknown**	**Estimated CST Time:**	**NA**
Rationale: The overall V/C ratios for the partial cloverleaf (E-W) intersection design are 0.58 for the AM peak period and 0.49 for the PM peak period. These expected V/C ratios will bring the intersection to an acceptable level of service in the design year. However, this alternative will significantly impact ROW including displacements of: two gas station, a bank and a garage. The construction cost for this alternative also increase more than ten times as the preferred alternative. Thus this alternative is not considered due to cost consideration.			

No-Build Alternative:			
Estimated Property Impacts:	**0**	**Estimated CST Cost:**	**0**
Estimated ROW Cost:	**0**	**Estimated CST Time:**	**NA**
Rationale: The no build alternative currently experiences heavy congestion conditions. This alternative is not considered because it does not meet the need and purpose of the project.			

Comments/additional information:

Attachments:

1. Concept Layout
2. Typical sections
3. Cost Estimates
4. Crash summaries
5. Traffic diagrams or projections
6. Capacity analysis summary
7. Meeting Minutes
8. Signed Agreements
9. MS4 discussion

Attachment 1
Concept Layout

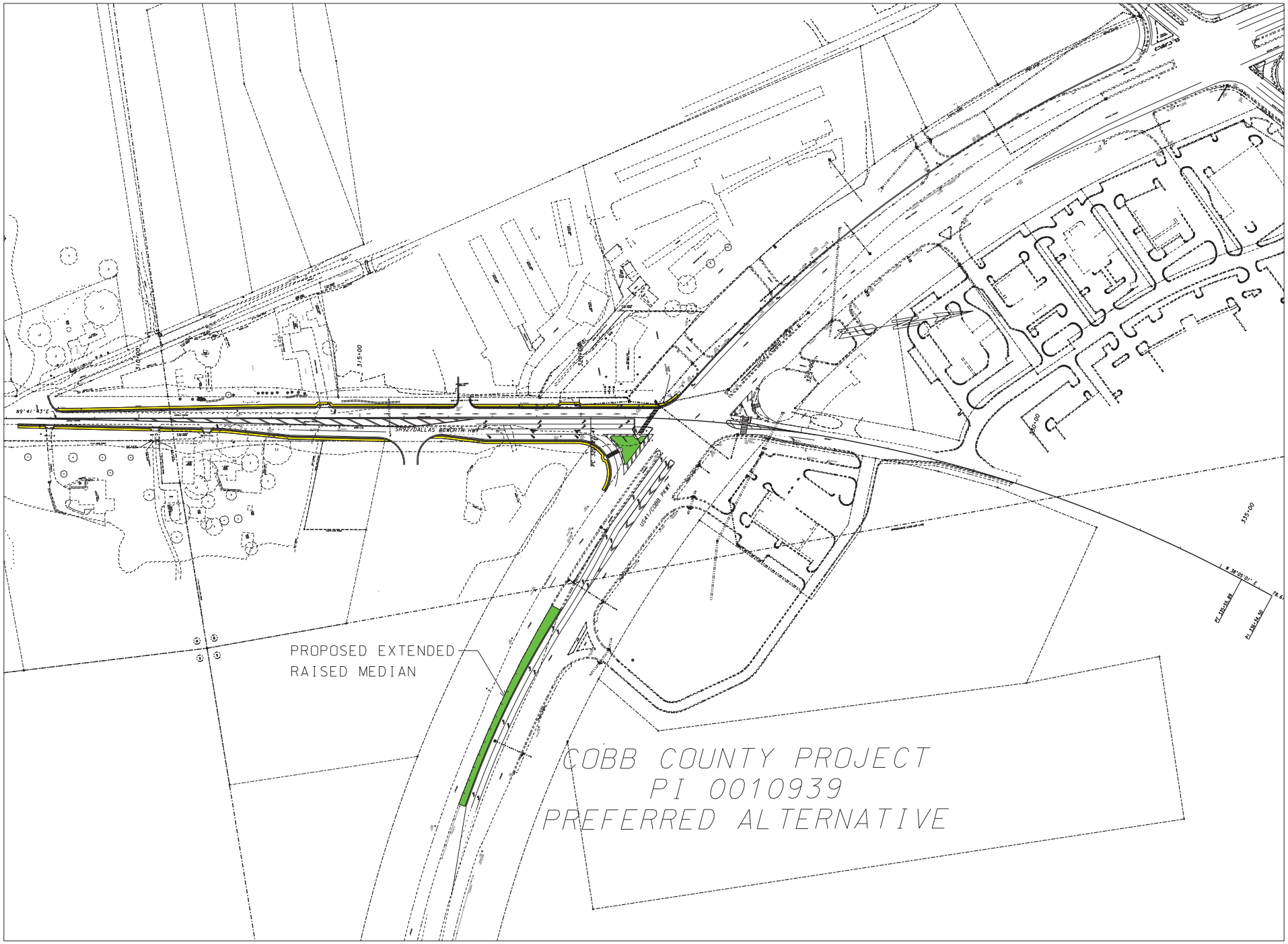
PROPOSED EXTENDED
RAISED MEDIAN
COBB COUNTY PROJECT
PI 0010939
PREFERRED ALTERNATIVE
SR92/DALLAS BOWRON HWY
US41/COBB PKWY
N9°41'43"E
315'00
335'00

Attachment 2
Typical Sections

REQUIRED PAVEMENT

- (A) RECYCLED ASPH CONC 12.5 mm SUPERPAVE, GP 2 ONLY, INCL BITUM MATL & H LIME, 165 LB/SY
- (B) RECYCLED ASPH CONC 19 mm SUPERPAVE, GP 1 OR 2, INCL BITUM MATL & H LIME, 220 LB/SY
- (C) RECYCLED ASPH CONC 25 mm SUPERPAVE, GP 1 OR 2, INCL BITUM MATL & H LIME, 330 LB/SY
- (D) GRADED AGREGATE BASE, 12"
- (E) ASPH CONC LEVELING
- (F) 8" X 30" CONCRETE CURB & GUTTER, TP 2 FACE
- (G) 4" CONC. SIDEWALK PVMT. GA DETAIL A-3
- (H) PAVEMENT REINFORCED FABRIC STRIPS, TP 2, 18 INCH WIDTH

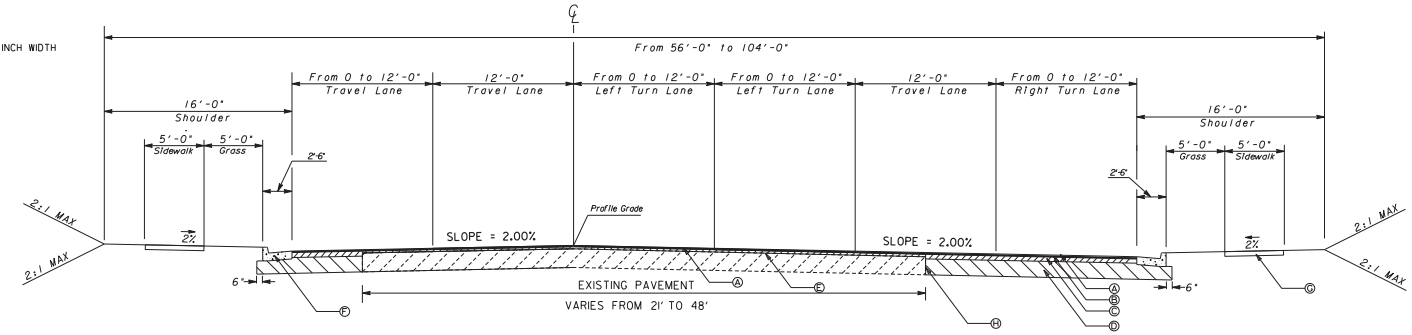

SLOPE CONTROLS		
SLOPE	CUT	FILL
4:1	0-10'	0-10'
2:1	OVER 10'	OVER 10'

PREFERRED ALTERNATIVE

SR 92/DALLAS ACWORTH HWY
TANGENT SECTION

GEORGIA
DEPARTMENT OF TRANSPORTATION

REVISION DATES

STATE OF GEORGIA
DEPARTMENT OF TRANSPORTATION
OFFICE: PROGRAM DELIVERY

SR 92/DALLAS ACWORTH HWY

DRAWING No. 05-001

3/1/2007 GPLM

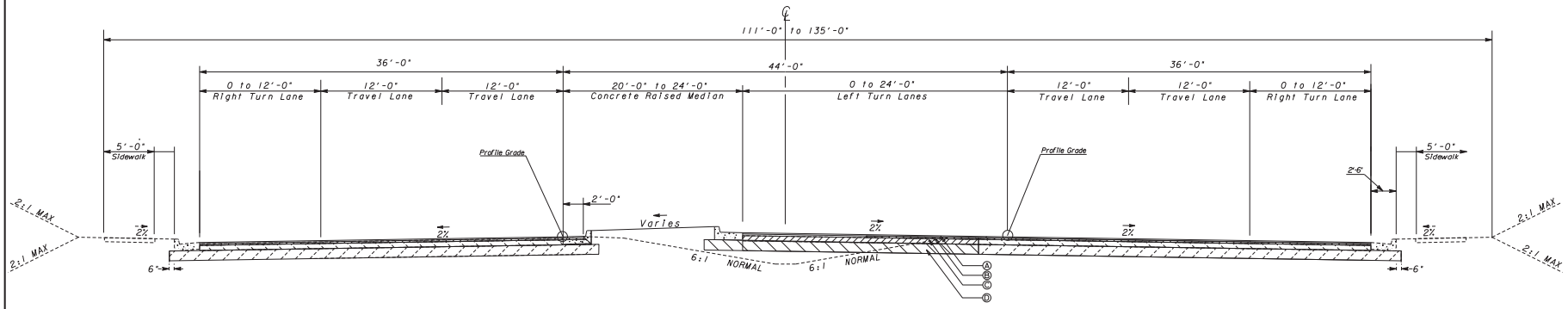

US 41/COBB PKWY
TANGENT SECTION

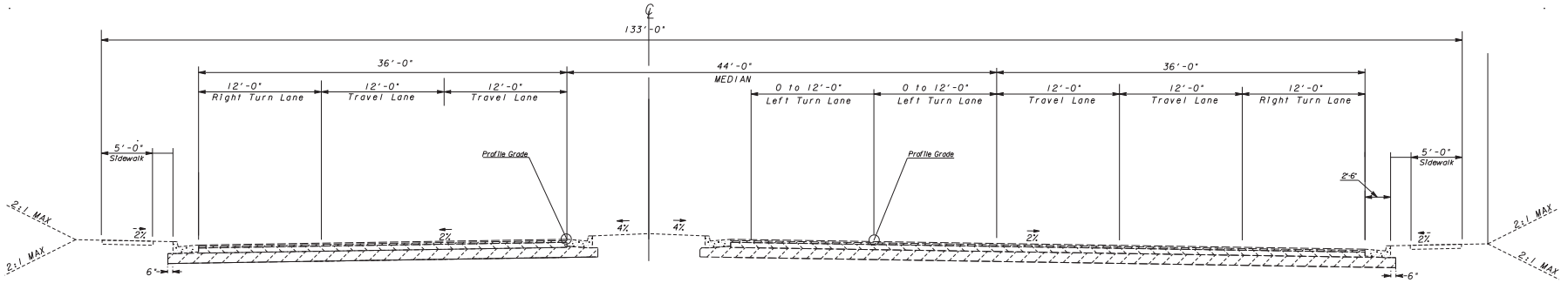

US 41/COBB PKWY
EXISTING TANGENT SECTION

REQUIRED PAVEMENT

- (A) RECYCLED ASPH CONC 12.5 mm SUPERPAVE, GP 2 ONLY, INCL BITUM MATL & H LIME, 165 LB/SY
- (B) RECYCLED ASPH CONC 19 mm SUPERPAVE, GP 1 OR 2, INCL BITUM MATL & H LIME, 220 LB/SY
- (C) RECYCLED ASPH CONC 25 mm SUPERPAVE, GP 1 OR 2, INCL BITUM MATL & H LIME, 330 LB/SY
- (D) GRADED AGREGATE BASE, 10"
- (E) ASPH CONC LEVELING
- (F) 8" X 30" CONCRETE CURB & GUTTER, TP 2 FACE
- (G) 4" CLASS B CONC.
- (H) STAMPED CONCRETE

GEORGIA
DEPARTMENT OF TRANSPORTATION

REVISION DATES

STATE OF GEORGIA
DEPARTMENT OF TRANSPORTATION
OFFICE: PROGRAM DELIVERY

SR 92/DALLAS ACWORTH HWY

DRAWING No. 05-002

Attachment 3
Detailed Cost Estimates

DETAILED COST ESTIMATE

Georgia Department of Transportation

Job: 0010939

JOB NUMBER *0010939* **FED/STATE PROJECT NUMBER** *0010939*

SPEC YEAR: *13*

DESCRIPTION: *SR92@US41 INTERSECTION IMPROVEMENT*

ITEMS FOR JOB 0010939

1 - ROADWAY

Line Number	ITEM	QUANTITY	UNITS	PRICE	DESCRIPTION	AMOUNT
0005	150-1000	1.000	LS	$120,000.00000	TRAFFIC CONTROL - 0010939	$120,000.00
0050	210-0100	1.000	LS	$175,000.00000	GRADING COMPLETE - 0010939	$175,000.00
0055	310-1101	2040.000	TN	$21.74933	GR AGGR BASE CRS, INCL MATL	$44,368.63
0060	402-1802	5.000	TN	$84.50478	RECYL AC PATCHING, INCL BM&HL	$422.52
0065	402-1812	80.000	TN	$93.18679	RECYL AC LEVELING,INC BM&HL	$7,454.94
0070	402-3121	374.000	TN	$85.44702	RECYL AC 25MM SP,GP1/2,BM&HL	$31,957.19
0075	402-3130	918.000	TN	$94.57553	RECYL AC 12.5MM SP,GP2,BM&HL	$86,820.34
0080	402-3190	250.000	TN	$91.45523	RECYL AC 19 MM SP,GP 1 OR 2 ,INC BM&HL	$22,863.81
0085	413-1000	996.000	GL	$3.80346	BITUM TACK COAT	$3,788.25
0090	441-0104	1775.000	SY	$30.76219	CONC SIDEWALK, 4 IN	$54,602.89
0110	441-0748	107.000	SY	$48.69361	CONC MEDIAN, 6 IN	$5,210.22
0095	441-0754	268.000	SY	$58.96699	CONC MEDIAN, 7 1/2 IN	$15,803.15
0100	441-4030	278.000	SY	$35.07451	CONC VALLEY GUTTER, 8 IN	$9,750.71
0105	441-6222	3458.000	LF	$18.13626	CONC CURB & GUTTER/ 8X30TP2	$62,715.19
0115	446-1100	3480.000	LF	$4.31397	PVMT REF FAB STRIPS, TP2,18 INCH WIDTH	$15,012.62
0120	500-9999	43.000	CY	$171.70573	CL B CONC,BASE OR PVMT WIDEN	$7,383.35
0134	634-1200	10.000	EA	$126.42337	RIGHT OF WAY MARKERS	$1,264.23
					SUBTOTAL FOR ROADWAY:	**$664,418.04**

2 - DRAINAGE

Line Number	ITEM	QUANTITY	UNITS	PRICE	DESCRIPTION	AMOUNT
0125	550-1180	2320.000	LF	$37.24989	STM DR PIPE 18,H 1-10	$86,419.74
0130	550-1240	200.000	LF	$48.47869	STM DR PIPE 24,H 1-10	$9,695.74
0185	668-1100	13.000	EA	$2,206.51903	CATCH BASIN, GP 1	$28,684.75
0190	668-1110	12.000	LF	$188.73812	CATCH BASIN, GP 1, ADDL DEPTH	$2,264.86
0195	668-1200	2.000	EA	$2,588.80251	CATCH BASIN, GP 2	$5,177.61
					SUBTOTAL FOR DRAINAGE:	**$132,242.70**

CONFIDENTIALITY NOTICE: This document may contain confidential and/or privileged information. Any unauthorized duplication, disclosure, distribution/ retransmission or taking of any action in reliance upon the material in this document is strictly forbidden.

DETAILED COST ESTIMATE

Georgia Department of Transportation

Job: 0010939

3 - SIGNING & MARKING

Line Number	ITEM	QUANTITY	UNITS	PRICE	DESCRIPTION	AMOUNT
0135	639-3004	2.000	EA	$11,570.01164	STEEL STRAIN POLE, TP IV	$23,140.02
0140	647-1000	1.000	LS	$175,000.00000	TRAF SIGNAL INSTALLATION NO - 0010939	$175,000.00
0145	647-2150	2.000	EA	$2,050.00000	PULL BOX, PB-5	$4,100.00
0150	653-0120	36.000	EA	$72.46507	THERM PVMT MARK, ARROW, TP 2	$2,608.74
0155	653-0130	4.000	EA	$98.08480	THERM PVMT MARK, ARROW, TP 3	$392.34
0160	653-1501	11000.000	LF	$0.42225	THERMO SOLID TRAF ST 5 IN, WHI	$4,644.75
0165	653-1502	420.000	LF	$0.77770	THERMO SOLID TRAF ST, 5 IN YEL	$326.63
0170	653-1804	840.000	LF	$2.35372	THERM SOLID TRAF STRIPE, 8,WH	$1,977.12
0175	653-3501	2500.000	GLF	$0.23004	THERMO SKIP TRAF ST, 5 IN, WHI	$575.10
0180	653-6006	1532.000	SY	$3.32772	THERM TRAF STRIPING, YELLOW	$5,098.07
0200	682-6233	125.000	LF	$3.00000	CONDUIT, NONMETL, TP 3, 2 IN	$375.00
					SUBTOTAL FOR SIGNING & MARKING:	**$218,237.77**

4 - EROSION CONTROL

Line Number	ITEM	QUANTITY	UNITS	PRICE	DESCRIPTION	AMOUNT
0010	163-0232	1.000	AC	$253.00000	TEMPORARY GRASSING	$253.00
0015	163-0240	32.000	TN	$272.23071	MULCH	$8,711.38
0020	163-0300	2.000	EA	$1,265.63774	CONSTRUCTION EXIT	$2,531.28
0025	163-0550	15.000	EA	$131.11923	CONS & REM INLET SEDIMENT TRAP	$1,966.79
0030	165-0030	1800.000	LF	$0.66945	MAINT OF TEMP SILT FENCE, TP C	$1,205.01
0035	165-0101	2.000	EA	$659.09666	MAINT OF CONST EXIT	$1,318.19
0040	165-0105	15.000	EA	$33.34497	MAINT OF INLET SEDIMENT TRAP	$500.17
0045	171-0030	3600.000	LF	$3.13005	TEMPORARY SILT FENCE, TYPE C	$11,268.18
0205	700-6910	3.000	AC	$586.90697	PERMANENT GRASSING	$1,760.72
0210	700-7000	8.000	TN	$98.62258	AGRICULTURAL LIME	$788.98
0215	700-8000	3.000	TN	$530.32650	FERTILIZER MIXED GRADE	$1,590.98
0220	700-8100	126.000	LB	$2.54184	FERTILIZER NITROGEN CONTENT	$320.27
					SUBTOTAL FOR EROSION CONTROL:	**$32,214.95**

TOTALS FOR JOB 0010939

ITEMS COST:	**$1,047,113.46**
COST GROUP COST:	**$0.00**
ESTIMATED COST:	**$1,047,113.46**
CONTINGENCY PERCENT:	**0.00**
ENGINEERING AND INSPECTION:	**0.05**
ESTIMATED COST WITH CONTINGENCY AND E&I:	**$1,099,469.13**

CONFIDENTIALITY NOTICE: This document may contain confidential and/or privileged information. Any unauthorized duplication, disclosure, distribution/ retransmission or taking of any action in reliance upon the material in this document is strictly forbidden.

PROJ. NO.	PREFERRED ALTERNATIVE		CALL NO.
P.I. NO.	0010939		
DATE	4/21/2014		

INDEX (TYPE)	**DATE**	**INDEX**
REG. UNLEADED	Apr-14	
DIESEL		
LIQUID AC		$ 563.00

Link to Fuel and AC Index:
http://www.dot.ga.gov/doingbusiness/Materials/Pages/asphaltcementindex.aspx

LIQUID AC ADJUSTMENTS

PA=[((APM-APL)/APL)]xTMTxAPL

Asphalt

Price Adjustment (PA)				**27395.58**	**$**	**27,395.58**
Monthly Asphalt Cement Price month placed (APM)	Max. Cap	60%	$	900.80		
Monthly Asphalt Cement Price month project let (APL)			$	563.00		
Total Monthly Tonnage of asphalt cement (TMT)				81.1		

ASPHALT	**Tons**	**%AC**	**AC ton**
Leveling	80	5.0%	4
12.5 OGFC	0	5.0%	0
12.5 mm	918	5.0%	45.9
9.5 mm SP	0	5.0%	0
25 mm SP	374	5.0%	18.7
19 mm SP	250	5.0%	12.5
	1622		**81.1**

BITUMINOUS TACK COAT

Price Adjustment (PA)			**$**	**1,445.08**	**$**	**1,445.08**
Monthly Asphalt Cement Price month placed (APM)	Max. Cap	60%	$	900.80		
Monthly Asphalt Cement Price month project let (APL)			$	563.00		
Total Monthly Tonnage of asphalt cement (TMT)				4.277920518		

Bitum Tack Gals	gals/ton	tons
996	232.8234	4.27792052

BITUMINOUS TACK COAT (surface treatment)

Price Adjustment (PA)				**0**	**$**	**-**
Monthly Asphalt Cement Price month placed (APM)	Max. Cap	60%	$	900.80		
Monthly Asphalt Cement Price month project let (APL)			$	563.00		
Total Monthly Tonnage of asphalt cement (TMT)				0		

Bitum Tack	SY	Gals/SY	Gals	gals/ton	tons
Single Surf. Trmt.	0	0.20	0	232.8234	0
Double Surf.Trmt.	0	0.44	0	232.8234	0
Triple Surf. Trmt	0	0.71	0	232.8234	0
					0

TOTAL LIQUID AC ADJUSTMENT	**$**	**28,840.66**

GEORGIA DEPARTMENT OF TRANSPORTATION
PRELIMINARY ROW COST ESTIMATE SUMMARY

Date: 4/29/2014 Project: 0010939
Revised: County: Cobb
PI: 0010939

Description: SR3 & SR 92
Project Termini: SR3 & SR 92

Existing ROW: Varies
Parcels: 9 Required ROW: Varies

Land and Improvements	$1,380,847.50
Proximity Damage	*$0.00*
Consequential Damage	*$0.00*
Cost to Cures	*$100,000.00*
Trade Fixtures	*$0.00*
Improvements	*$775,000.00*
Valuation Services	$33,750.00
Legal Services	$81,075.00
Relocation	$18,000.00
Demolition	$0.00
Administrative	$80,500.00
TOTAL ESTIMATED COSTS	$1,594,172.50
TOTAL ESTIMATED COSTS (ROUNDED)	***$1,595,000.00***

Preparation Credits	Hours	Signature

Prepared By: LaShone Alexander CG#: 286999 04/29/2014 (DATE)
Approved By: LaShone Alexander CG#: 286999 04/29/2014 (DATE)

NOTE: No Market Appreciation is included in this Preliminary Cost Estimate

allsop

DEPARTMENT OF TRANSPORTATION
STATE OF GEORGIA

INTER-DEPARTMENT CORRESPONDENCE

FROM: Patrick Allen, P.E. District Utilities Engineer **DATE:** May 1, 2014

TO: Peter Emmanuel, Project Manager

SUBJECT: PRELIMINARY UTILITY COST ESTIMATE – P.I. No. 0010939 – SR 3 @ SR 92 – Cobb County

As requested by your office, we are furnishing you with a Preliminary Cost Estimate for each utility with facilities potentially located with the project limits.

FACILITY OWNER	REIMBURSABLE	NON-REIMBURSABLE	TOTAL
Cobb EMC	$0.00	$284,100.00	$284,100.00
Atlanta Gas Light	$0.00	$157,500.00	$157,500.00
Cobb County Water (Water)	$0.00	$125,600.00	$125,600.00
AT&T	$0.00	$136,000. 00	$136,000.00
Comcast of Georgia	$0.00	$88,000.00	$88,000.00
Austell Gas System	$0.00	$53,250.00	$53,250.00
City of Acworth	$0.00	$122,700.00	$122,700.00
TOTAL	$0.00	$967,150.00	$967,150.00

This estimate is based upon the current information. We will provide an updated estimate when the plans are further developed.

If you have any questions, please contact Clyde Cunningham at 770-986-1117

RSB/PA/SW/CAC

Attachment 4
Crash summaries

4. Safety Analysis

In addition to vehicular mobility, safety is an important aspect related to the analysis of the SR 3/ SR 92 intersection. Traffic incidents (crashes) cause traffic congestion, economic loss, and the potential for injuries or loss of life.

When analyzing crash data, it is important to note that there are usually multiple underlying reasons for each crash. These include roadway geometry, weather conditions, driver behavior, traffic operations, on-road or roadside hazards, and construction activity. In most cases, no single factor causes a crash to occur. This report focuses on identifying the underlying causes of crashes to determine where motorist safety may be improved by means of upgrading roadway geometry, installing safety-related features, and/or improving traffic conditions.

Historic crash data for the SR 3/ SR 92 intersection was obtained from Cobb County for the years 2010 to 2013 and was analyzed to quantify the type and severity of the crashes. Although the crash data collected spans from 2010 to 2013, only crashes occurring between October 2010 and August 2013 are represented in the data.

4.1 Crash Rate Analysis

The Cobb County crash data was analyzed to determine the raw number of crashes that occurred at the study intersection during each year of data. Table 1 below presents a comparison between the raw number of study intersection crashes and the historic statewide average number of intersection crashes that occurred at comparable intersections. Statewide average intersection crashes were calculated using the Predictive Crash Table Tool Analysis Report spreadsheet obtained from GDOT. Upon inputting the functional class and average daily traffic for an intersection, the Predictive Crash Table Tool Analysis Report Spreadsheet calculates the number of historic crashes expected to have occurred at that intersection based on the number of historic crashes that have occurred at similar intersections throughout the state. Comparing the actual number of historic crashes to the number of predicted crashes calculated by the spreadsheet provides an indication of how the study intersection crash rate compares to crash rates at similar intersections throughout the state.

The table shows that the frequency of total crashes at the study intersection was higher than the statewide average intersection crash rate for the year between October 2010 and September 2011 only. The frequency of injury crashes at the study intersection was slightly higher than the statewide average intersection crash rate for all three years of available crash data. Finally, the table shows that fatal crashes are less frequent at the study intersection compared to the statewide intersection average as there were zero fatal crashes at the study intersection during the three years of analysis.

Table 1: SR 3 and SR 92/Old Acworth Dallas Rd. Crash Rates vs. Statewide Average Intersection Crash Rates

SR 3		10/2010 - 9/2011			10/2011 - 9/2012			10/2012 - 8/2013**		
		AADT	Intersection Raw #	Statewide Avg.*	AADT	Intersection Raw #	Statewide Avg.*	AADT	Intersection Raw #	Statewide Avg.*
SR 92/Old Acworth Dallas Rd.	Total Crashes	35,980	67	60.744	35,940	52	60.744	35,740	50	60.744
	Fatality Crashes		0	0.079		0	0.079		0	0.079
	Injury Crashes		15	13.724		14	13.724		15	13.724
	PDO Crashes		52	49.941		38	49.941		35	49.941

*2008 is the latest statewide average crash data available

**11 months of data

4.2 Crash Type Analysis

The crash data was also analyzed to determine the frequency and type of each crash occurring at the study intersection. In Georgia, crash data is categorized by type with the types focusing on the manner in which the vehicles collided. Figure 4 below shows the total number and percentage of each type of crash that occurred at the intersection of SR 3/ SR 92.

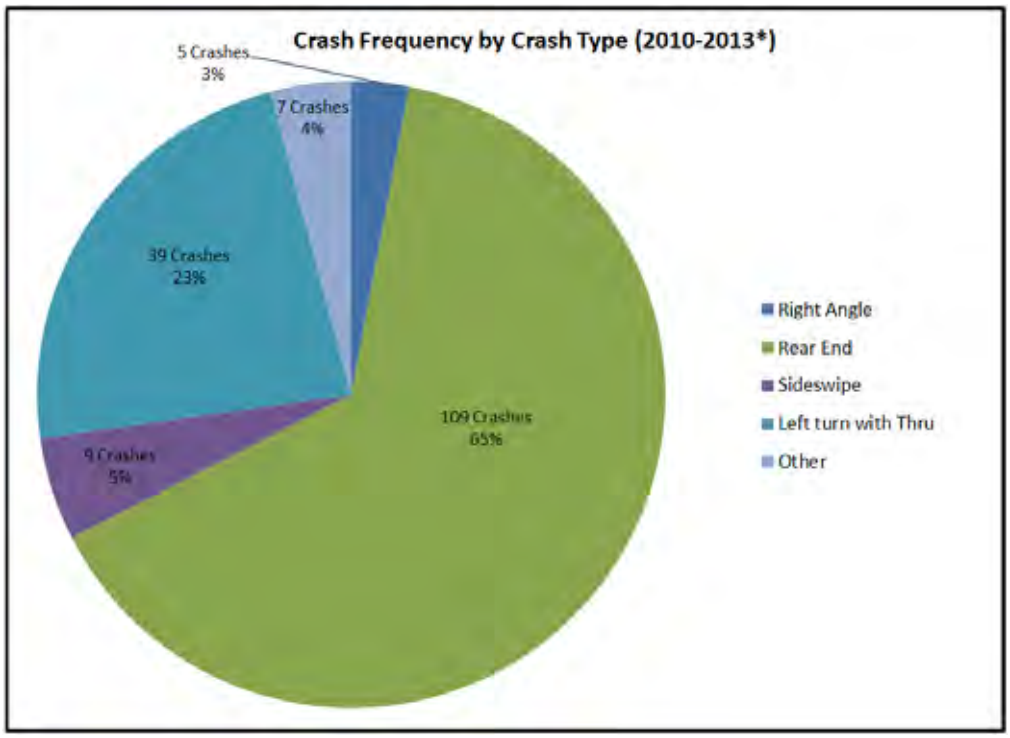

Figure 4: SR 3/ SR 92 Crash Frequency by Crash Type
**10/2010 – 8/2013*

These results show that during these three years, the 109 rear-end and 39 left turn with through crashes were the most prevalent crash types and constituted approximately 88% of the total crashes that occurred at the intersection. The most prevalent rear-end crashes occur on the eastbound and northbound legs of the intersection and almost all left turn with through crashes occur between northbound left-turning vehicles and southbound through vehicles. Rear-end and angle crashes are common crash types at signalized intersections. Collision diagrams prepared by Cobb County are presented in Appendix E.

4.3 Crash Severity Analysis

The severity of crashes was analyzed by determining the percentage of each type of crash that included injuries or fatalities. At the SR 3/ SR 92 intersection, injuries are common for angle and rear end crashes. According to Table 2, approximately 50-60 percent of the angle crashes and approximately 20 percent of the rear end crashes involved injuries. There are no fatalities associated with any of the crash types analyzed. In general, about a quarter of crashes during the three years of data involved injuries.

Table 2: Percent Injury Crashes by Crash Type (2010 – 2013)*
**10/2010 – 8/2013*

Type of Collision	Total Crashes	Injury Crashes	% Injury Crashes
Right Angle	5	3	60%
Rear End	109	21	19%
Sideswipe	9	0	0%
Left turn with Thru	39	20	51%
Other	7	0	0%
Overall	**169**	**44**	**26%**

5. Traffic Volumes

Both SR 3 and SR 92 serve a large amount of daily commuters. In the AM peak hour, the heaviest movements include the vehicles traveling eastbound on SR 92 that make a right at the study intersection onto SR 3 to head south (615 vehicles per hour (VPH)) and the vehicles traveling southbound on SR 3 that go straight through the study intersection to continue south (1,400 VPH). During the PM peak hour, the heaviest movements are the opposite: the vehicles traveling northbound on SR 3 that make a left at the study intersection onto SR 92 to head west (775 VPH) and the vehicles traveling northbound on SR 3 that go straight through the study intersection to

Attachment 5
Traffic diagrams or projections

Department of Transportation
State of Georgia

INTERDEPARTMENT CORRESPONDENCE

FILE P.I. # 0010939
Cobb County

OFFICE Planning

DATE September 19, 2013

FROM Cynthia L. VanDyke, State Transportation Planning Administrator

TO Genetha Rice-Singleton, State Program Delivery Design Engineer
Attention: Peter Emmanuel

SUBJECT **Reviewed** Design Traffic for *SR 3/Cobb Parkway @ SR 92/Acworth-Dallas Highway*.

As per your request, we've reviewed the consultant's Design Traffic for the above project.

The Design Traffic is approved based on the information furnished. Any questions concerning this review should be addressed to Ms.Leslie R. Woods at e-mail lwoods2@dot.ga.gov or phone (404) 631-1773.

CLV/LRW

SHEET 1 OF 5

EXISTING (2013) DHV

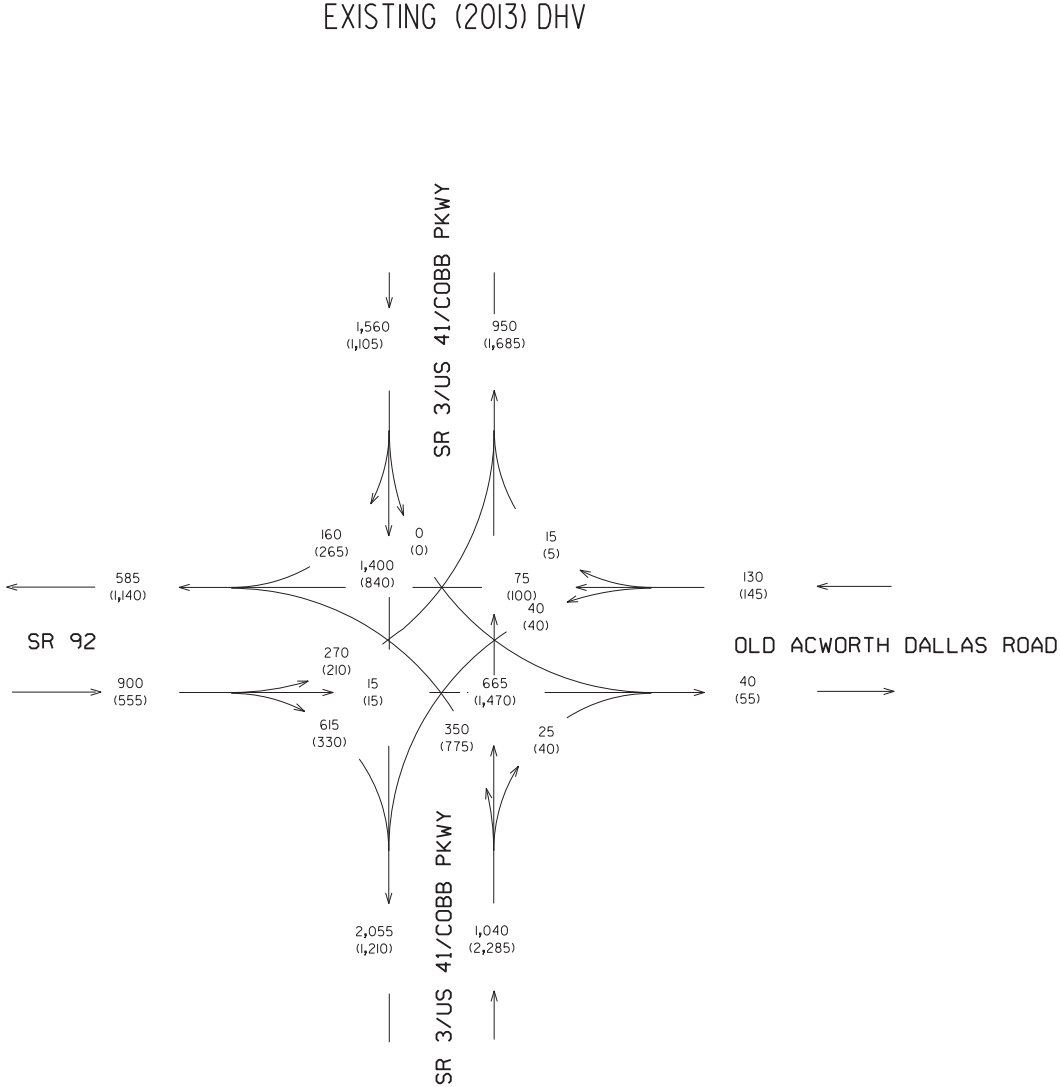

SR 3 AT SR 92
PI NO. 0010939
COBB COUNTY

AM PEAK HOUR = 000
PM PEAK HOUR = (000)

PEAK HOUR T% = 19%
S.U.% = 14%
COMB.% = 5%

COMPLETED BY: KC
CHECKED BY: JP
DATE: 8/21/2013

ARCADIS
Infrastructure, Water, Environment, Buildings

EXISTING (2013) ADT

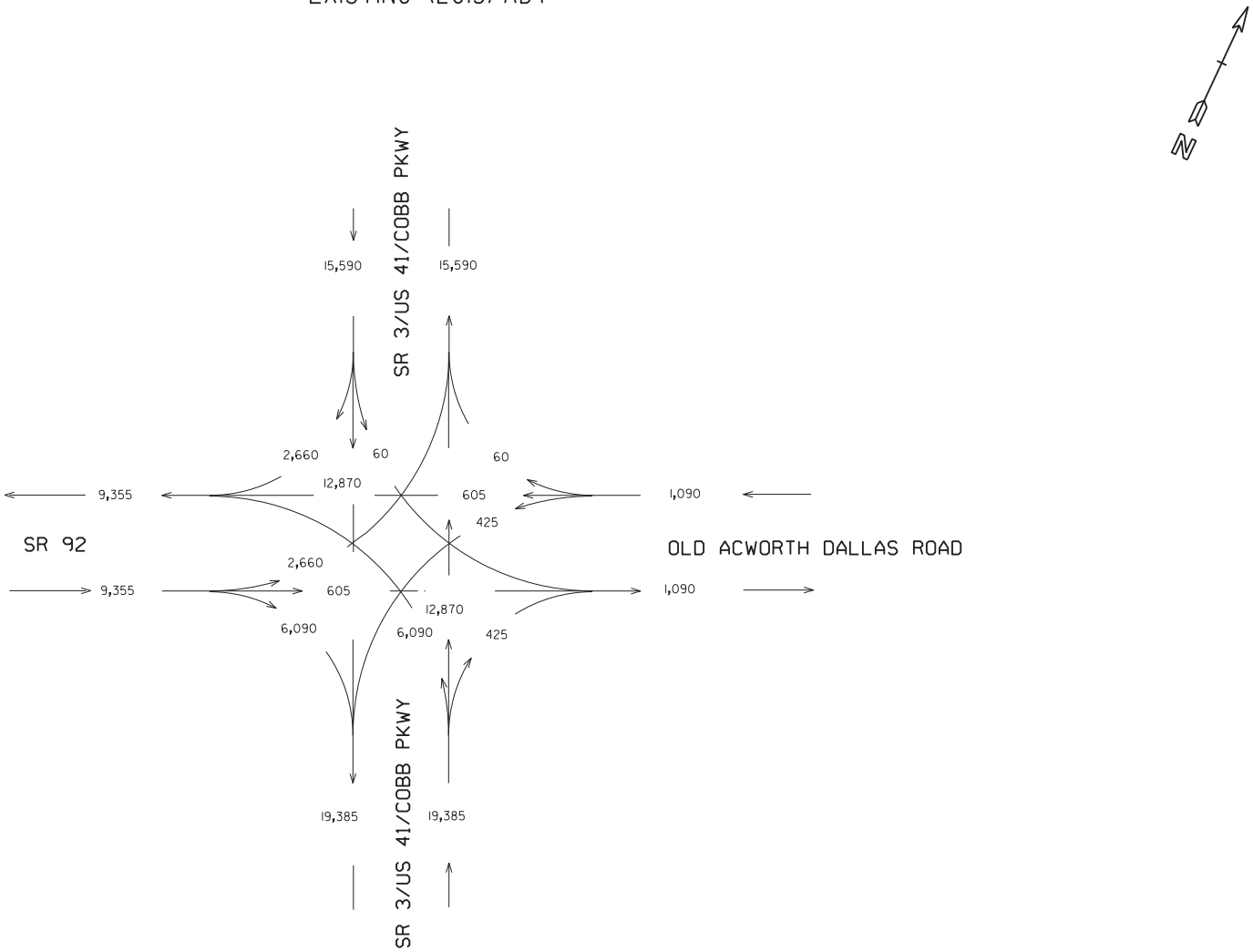

SR 3 AT SR 92
PI NO. 0010939
COBB COUNTY

ADT = 000

DAILY T% = 19%
S.U.% = 14%
COMB.% = 5%

COMPLETED BY: KC
CHECKED BY: JP
DATE: 8/21/2013

ARCADIS
Infrastructure, Water, Environment, Buildings

SHEET 3 OF 5

OPEN (2017) DHV
NO-BUILD/BUILD

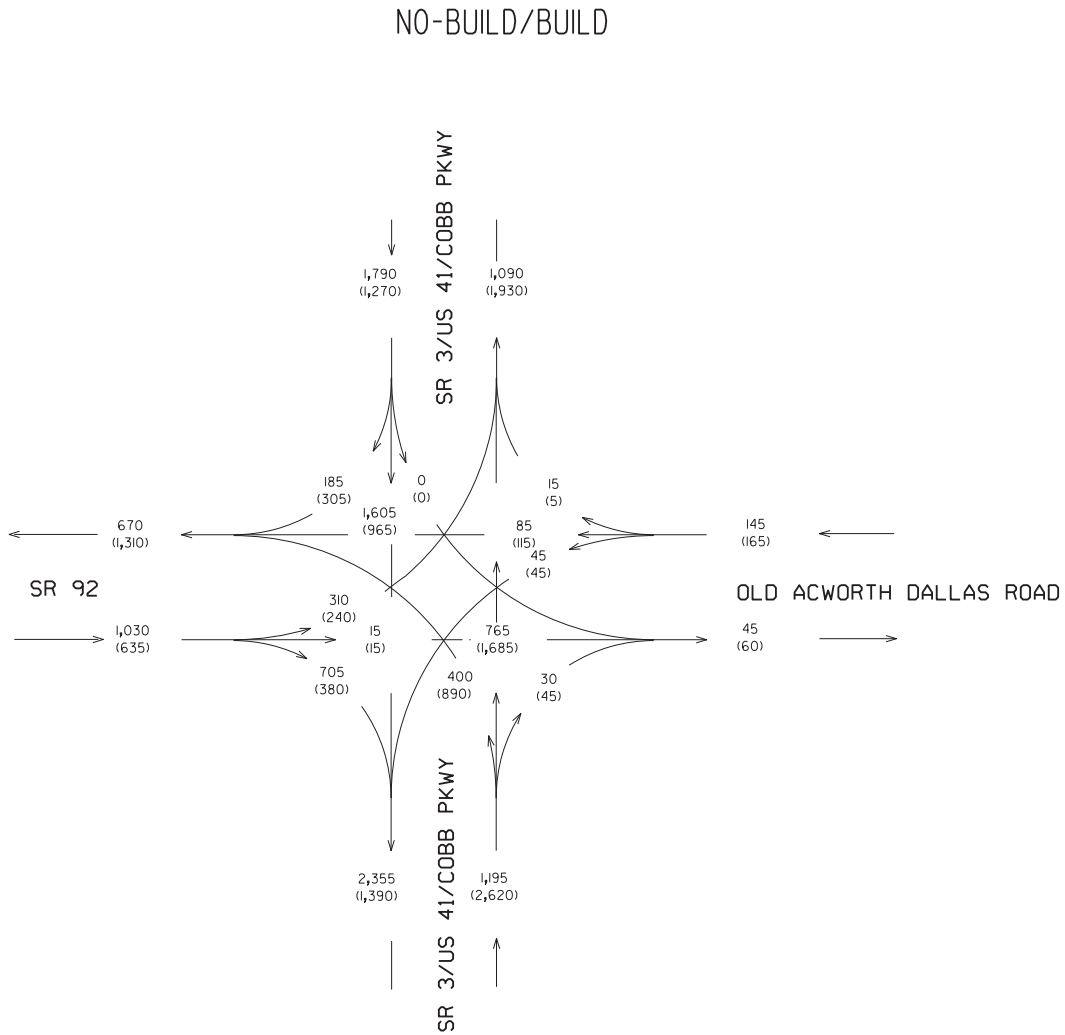

SR 3 AT SR 92
PI NO. 0010939
COBB COUNTY

AM PEAK HOUR = 000
PM PEAK HOUR = (000)

PEAK HOUR T% = 19%
S.U.% = 14%
COMB.% = 5%

COMPLETED BY: KC
CHECKED BY: JP
DATE: 9/5/2013

ARCADIS
Infrastructure, Water, Environment, Buildings

DESIGN (2037) DHV
NO-BUILD/BUILD

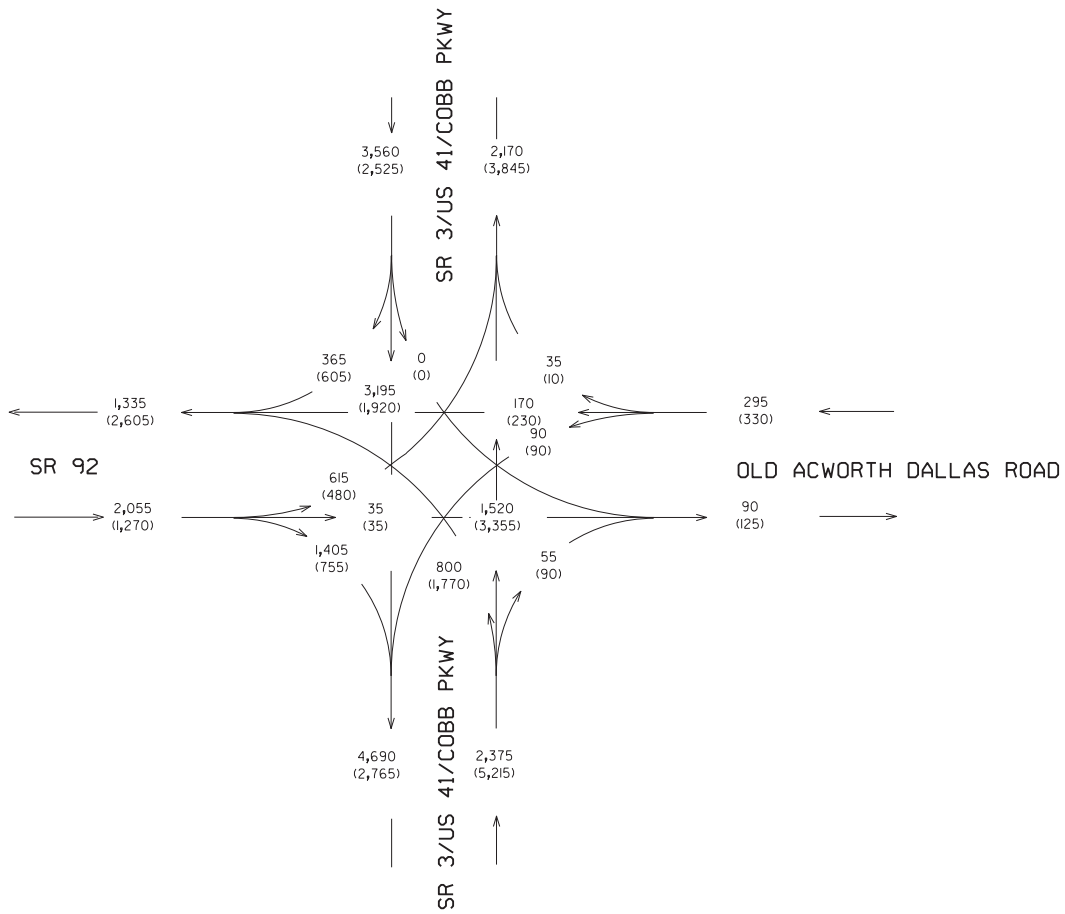

SR 3 AT SR 92
PI NO. 0010939
COBB COUNTY

AM PEAK HOUR = 000
PM PEAK HOUR = (000)

PEAK HOUR T% = 19%
S.U.% = 14%
COMB.% = 5%

COMPLETED BY: KC
CHECKED BY: JP
DATE: 9/5/2013

ARCADIS
Infrastructure, Water, Environment, Buildings

OPEN (2017)/DESIGN (2037) ADT
NO-BUILD/BUILD

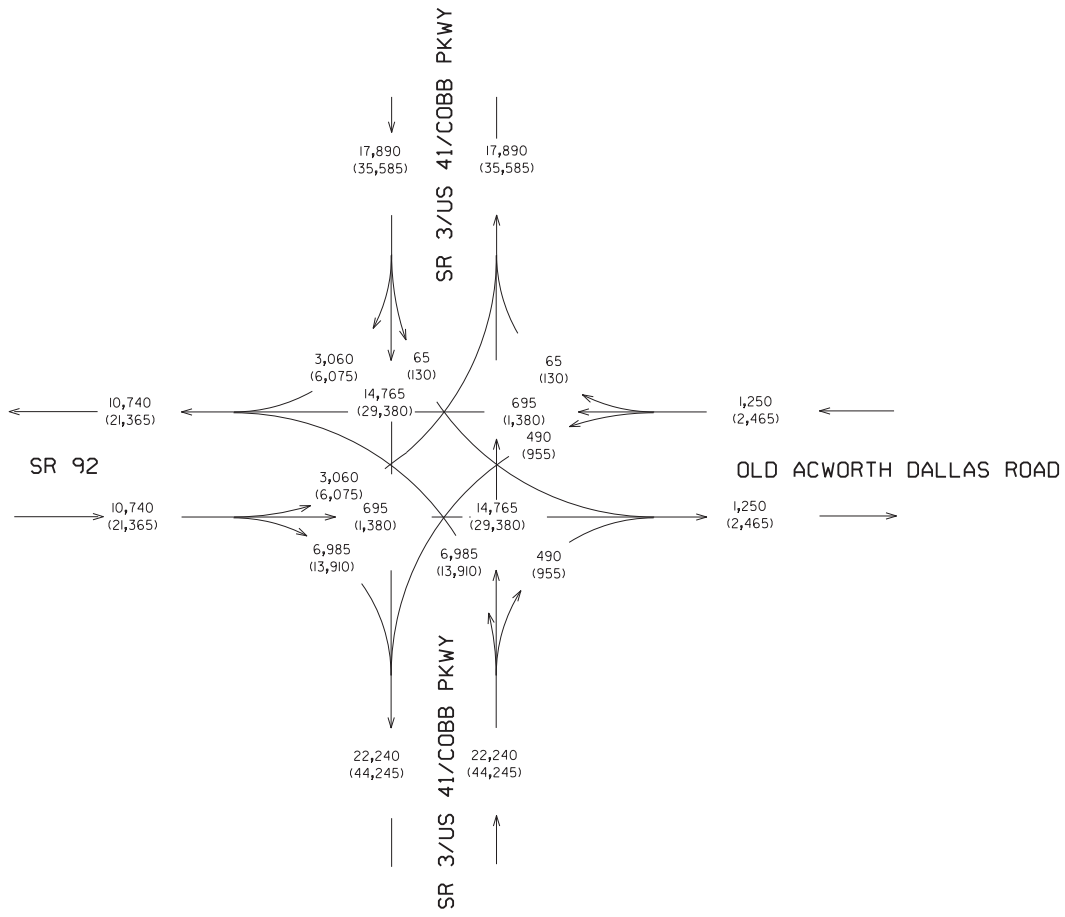

SR 3 AT SR 92
PI NO. 0010939
COBB COUNTY

2017 ADT = 000
2037 ADT = (000)

DAILY T% = 19%
S.U.% = 14%
COMB.% = 5%

COMPLETED BY: KC
CHECKED BY: JP
DATE: 9/5/2013

ARCADIS
Infrastructure, Water, Environment, Buildings

Attachment 6
Capacity analysis summary

.

6. Traffic Analysis

A detailed traffic analysis was completed for existing, no build, and build conditions using Synchro and SimTraffic. Synchro and SimTraffic were used to complete the intersection capacity analysis including an investigation of delay, level of service, and queues. Synchro was also used to obtain optimized traffic signal timing for all scenarios.

The following sections describe the findings of the Synchro and SimTraffic analyses.

6.1 Intersection Delay and Level of Service

Intersection capacity analysis was completed using Synchro. The analysis uses intersection geometry, peak hour volumes, and optimized signal timings to determine the intersection delay based on guidance provided by the Highway Capacity Manual (HCM). Intersection delay can be associated with a level of service (LOS) or a grade given to each intersection based on its operations. Table 3 below shows the average delay associated with each LOS.

Table 3: Level of Service Ranges

Level of Service (LOS)	Average Delay per Vehicle (Seconds/Vehicle)
A	Less than 10
B	10-20
C	20.1-35
D	35.1-55
E	55.1-80
F	Greater than 80

Table 4 below compares the intersection delay and level of service between no-build and build alternatives for existing year (2013), open year (2017), and design year (2037). The results show that although the level of service remains at an F for the build concepts in the future years, the total delay is significantly reduced from the no-build condition in all scenarios. The overall intersection delay is significantly reduced in the future build scenarios particularly due to the increased capacity on the northbound left and the eastbound right movements, which currently experience heavy congestion in the existing conditions.

Table 4: HCM 2000 Intersection Delay (sec/veh) and Level of Service

Analysis Year	Peak Hour/Scenario					
	AM			PM		
	No-Build	Alternative 1	Alternative 2	No-Build	Alternative 1	Alternative 2
Existing Year (2013)	118.9 (LOS F)			95.8 (LOS F)		
Open Year (2017)	178.2 (LOS F)	126.4 (LOS F)	126.4 (LOS F)	139.0 (LOS F)	64.4 (LOS F)	64.4 (LOS F)
Design Year (2037)	994.0 (LOS F)	931.0 (LOS F)	931.0 (LOS F)	760.2 (LOS F)	556.0 (LOS F)	556.0 (LOS F)

In addition to overall intersection delay, it is important to examine delay for key movements at the intersection such as the eastbound right and the northbound left. During the open year AM peak period, the delay for the eastbound right movement is reduced from 223.5 seconds per vehicle (sec/veh) in the no-build condition to 72.5 sec/veh in both build conditions. In the design year AM peak period, the delay for the same movement is reduced from 841.3 sec/veh to 240.3 sec/veh in both the build Alternative 1 and build Alternative 2 conditions. During the open year PM peak period, the delay for the northbound left turn movement is reduced from 292.0 sec/veh in the no-build condition to 72.1 sec/veh in both build alternatives. In the design year PM peak period, the delay for the same movement is reduced from 1360.9 sec/veh in the no-build condition to 784.8 sec/veh in both build alternatives. For each build scenario, the overall and per movement delay is the same for both build alternatives because the number of approach lanes and the optimized signal timings are the same in both build alternatives. A table summarizing the delay and level of service by movement for all analysis years and scenarios is available in Appendix C.

Additionally, full Synchro HCM reports are available in Appendix D.

6.2 Intersection Queue Lengths

While the intersection improvements are expected to reduce delays and queues, the build condition queues are still expected to be significant. The 95th percentile queue lengths for build conditions are expected to exceed the capacity of the existing turn bays, so they will need to be extended as a part of the build concepts. The following section discusses the expected requirements for the northbound and southbound left turn bay lengths under build conditions in the design year. A table containing the 95th percentile queue lengths by movement for all analysis years and scenarios is available in Appendix C and full SimTraffic queuing reports are available in Appendix D.

6.3 Turn Bay and Drop Lane Analysis

The expected required turn bay lengths were calculated for both build alternatives for the design year (2037). Because traffic volumes on the southbound left turn are expected to be minimal and are represented as zero in the Synchro models, a calculation for this turn bay length was unnecessary because there are no queues for this movement. Additionally, for the westbound approach, turn bay lengths were not calculated because no left or right turn lanes are included in either build alternative.

For the northbound and eastbound left turn bay lengths calculation, the formula presented in the design guidelines for a Type B Median Crossover (shown in Figure 5 below) were followed to determine the required turn bay lengths. The turn bay lengths were calculated by adding the 95th percentile queue length from SimTraffic to the required deceleration distance (150 feet) and Y-value taper (240 feet) based on the design speed and median width of the corridor. The data used in the turn bay length calculations is presented in Table 5 below. For design Alternative 1 and design Alternative 2, the required turn bay length was calculated using both the AM and PM queue lengths and then the higher of these two turn bay lengths was selected for each design alternative (shown in bold).

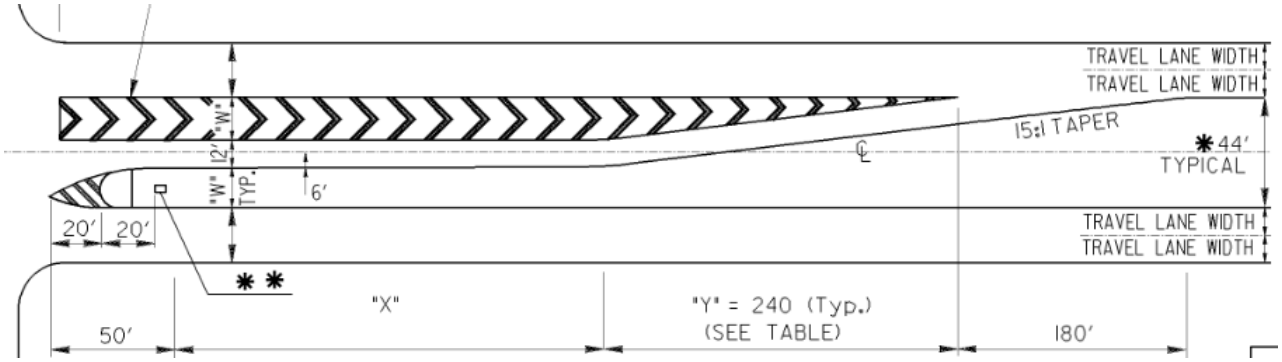

Figure 5: Design guidelines for Type B Median Crossovers

Table 5: Calculation of the minimum desired left turn bay lengths

Analysis Year	Movement	Build Condition	Peak Hour	95th Percentile Queue Length	Deceleration Length, X	Y	Minimum Desired Turn Bay Length
Design (2037)	Northbound Left	Alternative 1	AM	1005'	150'	240'	1395'
			PM	1006'	150'	240'	**1396'**
		Alternative 2	AM	1002'	150'	240'	1392'
			PM	1131'	150'	240'	**1521'**
	Eastbound Left	Alternative 1	AM	617'*	150'	240'	**1007'**
			PM	601'*	150'	240'	991'
		Alternative 2	AM	626'*	150'	240'	**1016'**
			PM	600'*	150'	240'	990'

*Queue exceeds available storage length impacting through and right turning movements. Therefore, not all of the left turn queue can accurately be captured using SimTraffic due to the additional inclusion of through and right turning vehicles.

The right turn bay lengths were calculated using the median crossover design guideline. Following this guideline, the single right turn bay lengths for this intersection (southbound Alternatives 1 and 2) are calculated by adding the 180 foot taper distance and the 400 foot deceleration distance for a total turn bay length of 580 feet. The dual right turn bay lengths (eastbound Alternatives 1 and 2), are calculated by doubling the taper distance to 360 feet and adding that to the 400 foot deceleration distance for a total turn bay length of 760 feet.

Additionally, per GDOT design guidelines, the additional westbound receiving lane should be maintained for a minimum of 800 feet from the intersection before the lane drop is initiated to allow sufficient distance for merging maneuvers.

6.4 Alternative Intersection Analysis

Although the build alternatives presented in this report are expected to reduce delay at the study intersection, the intersection is still expected to be performing at a failing or nearly failing level of service for both peak periods in open year and design year. The intersection treatments provided in the build concepts are not intended to be an end-all solution for this intersection and are meant to provide temporary improvements until another more involved alternative intersection design is implemented. To investigate the types of alternative intersection designs that may benefit operations at the study intersection, a planning-level analysis of the study intersection was completed using the Federal Highway Administration's (FHWA) CAP-X spreadsheet tool. The FHWA CAP-X spreadsheet tool was used to conduct an intersection capacity analysis using the projected design year intersection volumes and to recommend alternative intersection designs that may improve operations at the study intersection. The top three recommended alternative intersection designs included a Full Displaced Left Turn, a Partial Displaced

Left Turn N-S, or a Restricted Crossing U-Turn N-S intersection based on AM peak design year volumes and included a Quadrant Roadway S-E, a Partial Displaced Left Turn N-S, or a Full Displaced Left Turn based on PM peak design year volumes. Because the Full Displaced Left Turn and the Partial Displaced Left Turn N-S intersections were recommended for both AM and PM peak volumes, specific lane geometries were investigated for these two intersection designs using the FHWA CAP-X spreadsheet tool. The recommended lane geometries for these two alternative intersection designs can be found in Appendix F. The volume-to-capacity (V/C) ratios for the two recommended alternative intersection designs were 1.03 (AM Peak) and 1.02 (PM Peak) for the Full Displaced Left Turn intersection design and were 1.10 (AM Peak) and 1.11 (PM Peak) for the Partial Displaced Left Turn N-S intersection design. The implementation of one of these or another alternative intersection design should be considered to further improve intersection operations in the future.

7. Conclusion

The intersection of SR 92 and SR 3 in northwestern Cobb County is heavily used by commuters with regional origins and destinations. Currently, operational deficencies exist during both peak hours with significant delays occurring at the eastbound right during the AM peak period and at the northbound left during the PM peak period. The proposed build alternatives would add additional capacity to these two movements in addition to other upgrades. As a result, overall intersection delay as well as delay for these two movements in particular is expected to decrease significantly. In the AM peak, the delay on the eastbound right is expected to decrease by nearly 75 percent from the no-build to the build conditions. In the PM peak, the delay on the northbound left is expected to decrease by 30-60 percent from the no-build to the build conditions. In addition to reducing delay, the build alternatives presented in this report also maximize the use of the available pavement at the intersection as well as allow for the future implementation of northbound triple lefts by designing offset northbound/southbound left turns. The proposed build designs are also expected to improve intersection safety by converting the northbound left turn from a permitted movement to a protected movement.

Finally, although the proposed build designs are expected to significantly reduce delay, the study intersection is expected to be performing at a failing or nearly failing level of service in open and design years. Therefore, alternative intersection designs such as a Full Displaced Left Turn intersection or a Partial Displaced Left Turn N-S intersection should be considered for implementation at this intersection in the future.

Attachment 7
Meeting Minutes

URS

SUMMARY OF MEETING MINUTES

MEETING DATE: June 24, 2013
9:30 AM at GDOT OGC, 25th floor

PARTICIPANTS: Peter B. Emmanuel, GDOT/OPD
Kelly Patrick, Cobb DOT
Sam Pugh, GDOT/OES
Phillip Jackson, GDOT Traffic Engineer II
Landon Perry, GDOT
Sean Pharr, URS Corporation
Patrick Smith, URS Corporation
Thao Nguyen, URS Corporation

DISCUSSION: Concept Team Meeting for Safety & Operational Improvement Project, Cobb County – PI 0010939.

A concept team meeting regarding the above listed participants was held on February 4, 2014 at 1:00PM at One Georgia Center, 25th Floor conference room. The project is a safety and operational efficiency improvement project at the intersection of US41/SR3 Cobb Parkway and SR 92/ Old Dallas Acworth Highway (GDOT PI # 0010393). Peter Emmanuel opened the meeting with introductions of participants. The following items were discussed:

- The traffic analysis for the two presented alternatives indicates a LOS F in the design year, and therefore consideration should be given to the project justification statement, which presents the project as an operation project. The group discussed the benefits of the project, including providing turn queue storage, reducing delay, and providing turn lanes.

- Landon Perry noted the project funding can qualify for safety improvement funding, and the project justification will be updated to reflect the project need as a safety project. The concept report discusses the project will provide additional safety to the public.

- Peter Emmanuel requests the concept report to provide additional alternatives that will discuss operational improvement LOS C.

- Right of way impacts were discussed along the proposed RaceTrac parcel. Peter Emmanuel questioned the status of the encroachment permit with Cobb County. Cobb County will investigate if the project is coordinated with the RaceTrac Development.

URS Corporation
400 Northpark Town Center
1000 Abernathy Road, NE
Suite 900
Tel: 678.808.8800
Fax: 678.808.8400
www.urscorp.com

- Phillip Jackson mentioned that the RaceTrac site plan encroachment permit has been received by GDOT D7, and will check whether GDOT has approved the permit.

- The concept currently reflect a PCE for environmental. However if significant ROW impacts this may need to be changed to a CE, which will require a PIOH. The environmental personnel at the meeting; Patrick Smith and Sam Pugh confirmed that as long as the project does not impact access of the driveways, it could still fall under a PCE.

- Sean Pharr noted that the ROW impact can be minimized by not providing a raised median and may seek a sidewalk design variance. The design variance will ask to not provide sidewalk for the project to avoid impacts to the future RaceTrac gas station.

- Peter Emmanuel asked Patrick Smith whether Air/Noise, PM 2.5 and Carbon Monoxide hotspot will be an issue for this project. Patrick explained that with the approved traffic volumes reflected in the concept report, it will not be a problem.

- Peter Emmanuel asked Kelly Patrick whether Cobb County or GDOT will maintain the signal poles and the response was that Cobb County currently maintains signals in its jurisdiction. This discussion brought up other projects in the area including RTOP, local Cobb County project regarding Cedarcrest intersection improvement projects, and the SR 92 corridor widening project by GDOT. Peter advised the County to coordinate with the RTOP project to save costs for the signal poles and eliminate double work.

ACTION ITEMS:

1) Peter Emmanuel will send the consultant a new project justification statement.
2) URS will use the new project justification statement and revise the concept report accordingly.
3) The concept report will be revised to include discussion of design alternatives to improve the LOS to C.
4) Cobb County and GDOT will check to see whether RaceTrac permits have been approved.

Sign In Sheet

February 4, 2014

Concept Team Meeting - Sign in sheet

PI 0010939

Name	Organization Project Role	Email Address	Phone
Peter Emmanuel	GDOT Project Manager	pemmanuel@dot.ga.gov	404-631-1158
✓ Kelly Patrick	CCDOT Engineer III	kelly.patrick@cobbcounty.org	770-528-1636
Sean Pharr	URS Project Manager	Sean.pharr@urs.com	678-808-8839
Thao Nguyen	URS Project Engineer	Thao.nguyen@urs.com	678-808-8917
Sam Pugh	GDOT OES	spugh@dot.ga.gov	404.631.1167
Phillip Jackson	GDOT TRAFFIC ENGINEER II	pjackson@dot.ga.gov	770-986-1775
Patrick Smith	URS	patrick.n.smith@urs.com	678-808-8876
Landon Perry	GDOT	lperry@dot.ga.gov	404-635-2416

[redacted]

Attachment 8
Signed Agreements

Keith Golden, P.E., Commissioner

GEORGIA DEPARTMENT OF TRANSPORTATION

One Georgia Center, 600 West Peachtree Street, NW
Atlanta, Georgia 30308
Telephone: (404) 631-1000

June 7, 2013

Mrs. Faye DiMassimo, Director
Cobb County DOT
1890 Services Parkway
Marietta, GA 30008-4014

Dear Mrs. DiMassimo:

I am returning for your files an executed agreement between the Georgia Department of Transportation and Cobb County for the following project:

Cobb County, PI# 0010939

We look forward to working with you on the successful completion of the joint project.
Should you have any questions, please contact the Project Manager Peter Emmanuel at (404) 631-1158.

Sincerely,

Angela Robinson,
Financial Management Administrator

AR:kp

Enclosure

c: Bob Rogers
Rachel Brown – District 7 Engineer
Vicki Gavalas – District 7 Planning & Programming Engineer
Patrick Allen, P.E. – District 7 Utilities Engineer
Mike Bolden – State Utilities Engineer

Attachment 9

MS4 discussion

URS

Memorandum

URS has performed a conceptual review and analysis of the stormwater requirements for the proposed Cobb County Department of Transportation (CCDOT) intersection improvement project of SR 92/Dallas Acworth Highway and US 41/Cobb Parkway. The proposed project consists of two alternatives. Alternative 1 consists of widening SR92 southbound to two lanes due to adding a dual left turn lane from US 41 northbound. Alternative 2 consists of widening SR92 southbound to two lanes and a concrete median due to adding a dual left turn lane from US 41 northbound. A conceptual level stormwater analysis was performed for each alternative to determine if stormwater best management practices (BMPs) would be required and if so, which ones would work within the limited footprint of the project. The results of the conceptual analysis are discussed below.

Alternative 1

Alternative 1 consists of the construction of approximately 1400 linear feet of concrete sidewalk on both sides of SR92 and the reconstruction of several concrete driveways on both sides. The road also widens on both sides to provide receiving lane and provide right turn lane approaching the intersection. The project area is 2.82 acres with 1.24 acres of those acres being disturbed. To provide sufficient stormwater best management practice, different alternatives are considered including: pervious concrete sidewalk, vegetative filter strips and grassed swales, and detention ponds at various locations within the project limits. The required sizing for the detention pond is conceptually calculated at 150 ft by 80 ft. The installation of these proposed BMPs requires additional 0.83 acres of disturbed area within the project limits and impact right of way on newly developments and business properties. This requires an additional 67% of the conceptual disturbed area, which is considered not feasible to a QUICK project. No stormwater quantity controls are proposed for this alternative, and it is anticipated this project is exempt.

Alternative 2

Alternative 2 consists of the construction of approximately 1400 linear feet of concrete sidewalk on both sides of SR92 and the reconstruction of several concrete driveways on both sides. This alternative requires additional right of way to provide an eight foot concrete raised median and the road also widens on both sides to provide receiving lane and provide right turn lane approaching the intersection. The project area is 3.10 acres with 1.48 acres of those acres being disturbed. To provide sufficient stormwater best management practice, different alternatives are considered including: pervious concrete sidewalk, vegetative filter strips and grassed swales, and detention ponds at various locations within the project limits. The required sizing for the detention pond is conceptually calculated at 165 ft by 85 ft. The installation of these proposed BMPs requires additional 1.22 acres of disturbed area within the project limits and impact right of way on newly developments and business properties. This requires an additional 82% of the conceptual disturbed area, which is considered not feasible to a QUICK project. No stormwater quantity controls are proposed for this alternative, and it is anticipated this project is exempt.

400 Northpark Town Center, 1000 Abernathy Road, NE, Suite 900, Atlanta, Georgia 30328
Phone: 678-808-8800 Fax: 678-808-8400