ORIGINAL TO GENERAL FILES

DEPARTMENT OF TRANSPORTATION
STATE OF GEORGIA

OFFICE OF DESIGN POLICY & SUPPORT
INTERDEPARTMENTAL CORRESPONDENCE

FILE P.I. # 0010768
Fulton County
GDOT District 7 - Metro Atlanta
SR 400 @ CR 9284/Windward Parkway
Operational Improvement

OFFICE Design Policy & Support

DATE 8/5/2015

FROM for Brent Story, State Design Policy Engineer

TO SEE DISTRIBUTION

SUBJECT **APPROVED CONCEPT REPORT**

Attached is the approved Concept Report for the above subject project.

Attachment

DISTRIBUTION:

Glenn Bowman, Director of Engineering
Joe Carpenter, Director of P3/Program Delivery
Genetha Rice-Singleton, Assistant Director of P3/Program Delivery
Albert Shelby, State Program Delivery Engineer
Darryl VanMeter, State Innovative Delivery Engineer
Bobby Hilliard, Program Control Administrator
Cindy VanDyke, State Transportation Planning Administrator
Hiral Patel, State Environmental Administrator
Ben Rabun, State Bridge Engineer
Andrew Heath, State Traffic Engineer
Angela Robinson, Financial Management Administrator
Lisa Myers, State Project Review Engineer
Charles "Chuck" Hasty, State Materials Engineer
Lee Upkins, State Utilities Engineer
Richard Cobb, Statewide Location Bureau Chief
Kathy Zahul, District Engineer
Scott Lee, District Preconstruction Engineer
Patrick Allen, District Utilities Engineer
Cynthia Burney, Project Manager
BOARD MEMBER - 6th Congressional District

DEPARTMENT OF TRANSPORTATION
STATE OF GEORGIA
PROJECT CONCEPT REPORT

Project Type:	Reconstruction	P.I. Number:	0010768
GDOT District:	Seven	County:	Fulton
Federal Route Number:	19	State Route Number:	400
		Project Number:	N/A

SR 400/US 19 at CS 928401/Windward Parkway

Submitted for approval:

Gresham, Smith and Partners — Date: 3/31/15

City of Alpharetta — Date: 2/7/15

ASA/DE State Program Delivery Engineer — Date: 5/15/15

GDOT Project Manager — Date: 11 May 2015

Recommendation for approval:

* State Environmental Administrator — Date: 6-24-15

* FOR State Traffic Engineer — Date: 7-17-15

* Project Review Engineer — Date: 6-9-15

* State Utilities Engineer — Date: 6-17-15

District Engineer — Date:

☒ MPO Area: This project is consistent with the MPO adopted Regional Transportation Plan (RTP)/Long Range Transportation Plan (LRTP).

☐ Rural Area: This project is consistent with the goals outlined in the Statewide Transportation Plan (SWTP) and/or is included in the State Transportation Improvement Program (STIP).

State Transportation Planning Administrator — Date: 6-11-15

* Recommendation on file

PROJECT LOCATION MAP

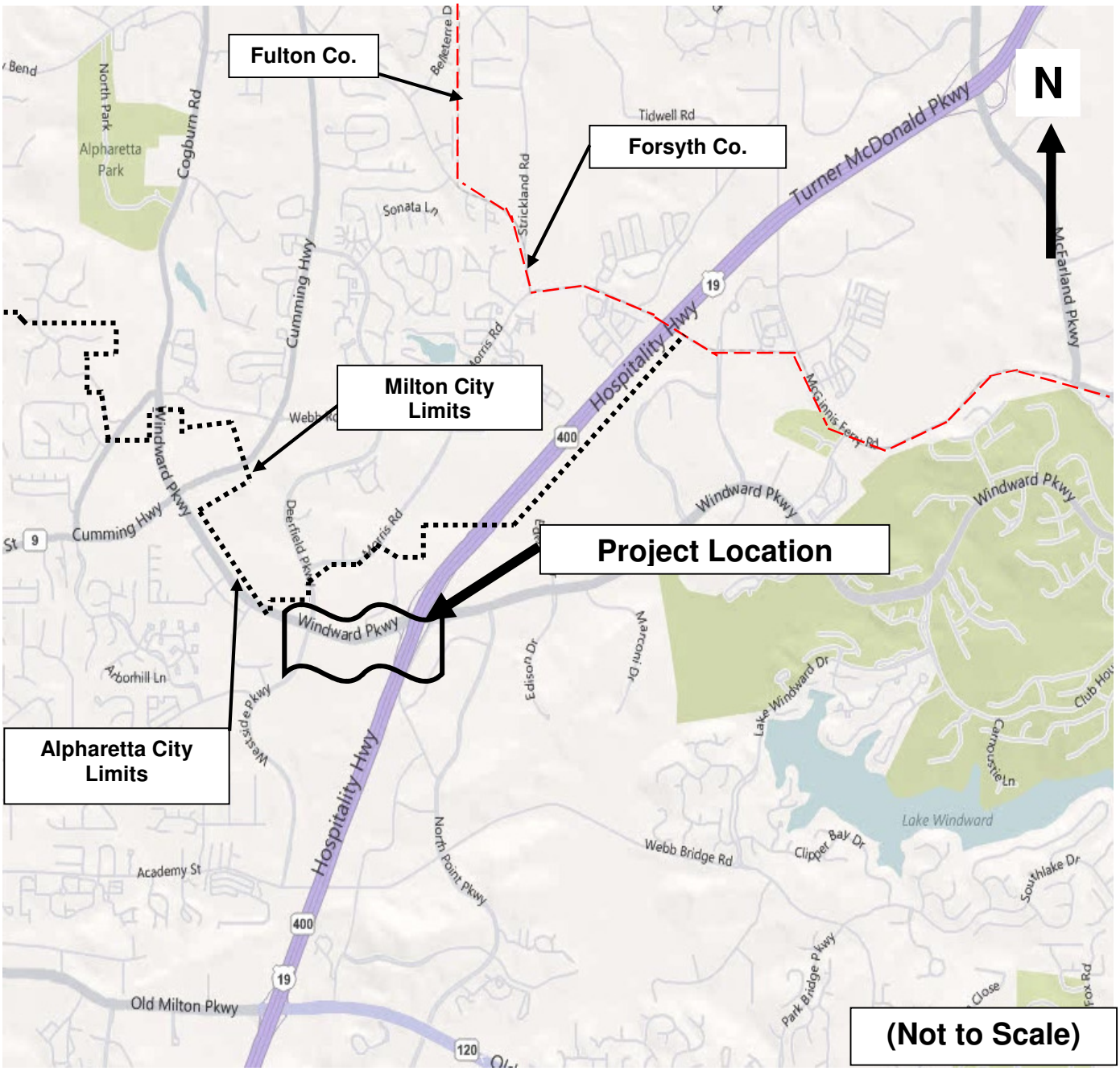

PLANNING AND BACKGROUND

Project Justification Statement:

In 2009, the North Fulton Community Improvement District (NFCID) completed a traffic study at SR 400 northbound and the Windward Parkway exit ramp. The study determined that morning congestion on SR 400 northbound was attributed to traffic turning right onto Windward Parkway eastbound and afternoon congestion was from traffic turning left onto westbound Windward Parkway. The NFCID proposed two phases of improvements to address congestion at Windward Parkway and SR 400. The Phase 1 project (completed in 2012) added a right turn lane on Windward Parkway that is received from the SR 400 northbound exit ramp and drops into North Point Parkway.

The NFCID proposed a Phase 2 project to address the afternoon congestion which has now been programmed as this project. This proposed project will utilize operational funds to construct a triple left turn lane on the northbound ramp and widen Windward Parkway from the SR 400 northbound exit ramp westbound to Westside Parkway/Deerfield Parkway. The additional lane on Windward Parkway will be dropped at Deerfield Parkway as a right turn only lane. A bicycle lane will be provided with the improvements on Windward Parkway and will connect into the existing bicycle lanes along Windward Parkway. A second westbound left turn lane on Windward Parkway will be constructed at the Westside Parkway intersection.

The project limit of Westside Parkway/Deerfield Parkway was chosen due to the high volume of vehicles turning right from westbound Windward Parkway to northbound Deerfield Parkway. The project limit at the SR 400 northbound exit ramp and Windward Parkway was chosen due to the high volume of traffic turning left onto Windward Parkway westbound from the SR 400 northbound exit.

The proposed project will also construct a 1,900 foot outside shoulder on SR 400 northbound at the Windward Parkway exit ramp adjacent to where the existing paved shoulder was recently converted to a flex exit lane. This will allow for the flex lane to be fully utilized as an optional exit lane and will create a permanent multi-lane exit from GA 400 northbound onto Windward Parkway. An analysis was completed to determine if an auxiliary lane on SR 400 should extend south to Old Milton Parkway. However, the additional cost did not warrant sufficient benefit to continue an auxiliary lane to Old Milton Parkway. In addition, the recently constructed flex lane functions as an auxiliary lane between Old Milton Parkway and Windward Parkway during peak hours.

The major performance goal for the project is to reduce congestion and improve mobility along SR 400 at the northbound exit ramp to Windward Parkway. Secondary benefits include (1) increased mobility and congestion relief on Windward Parkway, (2) controlled access on Windward Parkway with the extension of a median on Windward Parkway to Deerfield Parkway, and (3) improved access and mobility for vehicles accessing Westside Parkway/Deerfield Parkway from SR 400 northbound.

Existing conditions: Currently, the SR 400/US 19 northbound off ramp onto Windward Parkway has one optional exit lane and one flex auxiliary lane that previously served as the paved outside shoulder. The flex lane ends immediately south of the ramp divergence. North of the gore area, the ramp widens to four lanes (two left turn lanes and two right turn lanes). The ramp within this location has an inside paved shoulder width of 8 feet and outside paved shoulder width of 12 feet. Westbound Windward Parkway currently has two 12 feet wide travel lanes, a 4 feet wide bicycle lane, and 12 feet wide right turn lanes at two commercial driveways and at the intersection with northbound Deerfield Parkway. There are existing 12 feet wide single left turn lanes on westbound Windward Parkway at a signalized intersection with a commercial driveway and at the intersection with southbound Westside Parkway. Windward Parkway at the intersection with Westside Parkway has existing 12 feet wide single left turn lanes and right turn lanes for the eastbound and westbound approaches, and a 4 feet wide bicycle lane on both approaches. Westbound Windward Parkway currently has an urban shoulder with a minimum width of 10 feet and a 5 feet wide sidewalk which has an offset from the back of curb that varies from 2 feet to 30 feet.

Other projects in the area:

PI # 0007838	Widening of SR 9/Cumming Highway from Windward Parkway to Forsyth County line; project unlet
PI # 0006818	Windward Parkway Traffic Signal interconnections; project complete
PI # 0009711	Additional right turn lane from SR 400 ramp eastbound to North Point Parkway; open to traffic; project complete
PI # 721780	Widening of SR 9 from Academy Street to Windward Parkway; project unlet
PI # 0001757	SR 400 from I-285 to McFarland Rd/Forsyth Co for HOV lanes; project unlet
PI # 0008444	SR 400 from CR 209/Spalding Dr. to CR 458/McFarland Rd; project unlet
N/A	Milton Multi-Use Trail Project; project unlet

MPO: Atlanta Regional Commission (ARC) **TIP #:** FN-278

Congressional District(s): 6

Federal Oversight: ☐ PoDI ☒ Exempt ☐ State Funded ☐ Other

Projected Traffic (SR 400/US 19): AADT 24 HR T: 4 %
Current Year (2014): 121,050 Open Year (2019): 124,150 Design Year (2039): 133,750

Projected Traffic (CS 928401/Windward Parkway): AADT 24 HR T: 5 %
Current Year (2014): 45,850 Open Year (2019): 49,800 Design Year (2039): 55,300

Traffic Projections Performed by: Gresham, Smith and Partners

Functional Classification (SR 400/US 19): Urban Freeway and Expressway
(CS 928401/Windward Parkway): Urban Collector Street

Complete Streets - Bicycle, Pedestrian, and/or Transit Standard Warrants:

Warrants met: ☐ None ☒ Bicycle ☒ Pedestrian ☒ Transit

Pedestrian, bicycle, and transit facilities are currently provided within the project. Four feet wide bicycle lanes are currently provided along eastbound and westbound Windward Parkway. Six feet wide sidewalks are currently provided along eastbound and westbound Windward Parkway. There are two existing MARTA bus stops (route 185) along Windward Parkway that are located within the project limits. The existing bus stop, bicycle lane, and sidewalk on eastbound Windward Parkway will not be impacted by the project. The existing bus stop pad, bicycle lane, and sidewalk on westbound Windward Parkway will be replaced in kind.

Is this a 3R (Resurfacing, Restoration, & Rehabilitation) Project? ☒ No ☐ Yes

Pavement Evaluation and Recommendations

Preliminary Pavement Evaluation Summary Report Required? ☒ No ☐ Yes
Preliminary Pavement Type Selection Report Required? ☒ No ☐ Yes

Feasible Pavement Alternatives: ☐ HMA ☐ PCC ☒ HMA & PCC

New pavement will be placed to add auxiliary lane next to existing pavement along Windward Parkway owned by the City of Alpharetta, and the existing pavement on Windward Parkway will be overlaid to make striping modifications. The improvements to the GA 400 northbound exit ramp will match existing depth of concrete pavement constructed in 2003 and 2014.

DESIGN AND STRUCTURAL

Description of the proposed project: The proposed project begins along the SR 400/US 19 northbound travel lanes, approximately 3,800 feet south of intersecting Windward Parkway where the existing outside flex lane will be converted into an auxiliary lane. A 14 foot wide outside shoulder approximately 1,900 feet in length will be constructed from the beginning of the project limits adjacent to the existing flex lane and ending 100 feet south of the gore area, where the shoulder will tie into the existing paved shoulder. An existing ATMS device (CCTV Camera System) and corresponding fiber connections located on SR 400/US 19 will be removed and reset. A third left turn lane with a storage length of 785 feet and inside paved shoulder will be constructed on the SR 400/US 19 northbound off ramp. A third through lane with a bicycle lane and urban shoulder will be constructed along westbound Windward Parkway from the intersection at the SR 400/US 19 northbound ramp terminus to the Deerfield Parkway/Westside Parkway intersection. At this point, the third through lane will drop into a right turn lane onto northbound Deerfield Parkway. Additionally, a second southbound left turn lane on westbound Windward Parkway with a storage length of 400 feet will be constructed at the Deerfield Parkway/Westside Parkway intersection. The existing raised median at this location will be extended 500 feet to the stop bar for the proposed dual left turn lanes. The existing decorative lighting located along Windward Parkway will also be removed and reset where required. The total project is 0.72 miles along SR 400/US 19, 0.63 miles along Windward Parkway, is within the city of Alpharetta, and entirely within Fulton County.

Major Structures: N/A

Mainline Design Features: SR 400/US 19 NB (Urban Freeway and Expressway)

Feature	Existing	Standard*	Proposed
Typical Section			
- **Number of Lanes**	**5 (1 Flex Lane)**	**N/A**	**5 (1 Aux Lane)**
- **Lane Width(s)**	**12 ft.**	**12 ft. min**	**12 ft.**
- **Median Width & Type**	**2 ft Single Slope Concrete Barrier**	**2 ft Single Slope Concrete Barrier**	**2 ft Single Slope Concrete Barrier**
- **Outside Shoulder or Border Area Width**	**12 ft. paved, 4 ft. grassed**	**10 ft. paved, 2 ft. grassed**	**12 ft. paved, 2 ft. grassed**
- **Outside Shoulder Slope**	**4:1 Max**	**4:1 Max**	**4:1 Max**
- **Inside Shoulder Width**	**6 ft. paved**	**12 ft. paved**	**6 ft. paved**
- **Sidewalks**	**N/A**	**N/A**	**N/A**
- **Auxiliary Lanes**	**1 (Flex Lane)**	**N/A**	**1**
- **Bike Lanes**	**0**	**N/A**	**0**
Posted Speed	**65 mph**		**65 mph**
Design Speed	**65 mph**	**65 mph**	**65 mph**
Min Horizontal Curve Radius	**9000 ft.**	**1685 ft.**	**9000 ft.**
Maximum Superelevation Rate	**6% Max**	**6% Max**	**6% Max**
Maximum Grade	**3.20% Max**	**8% Max**	**3.20% Max**
Access Control	**Limited**	**Limited**	**Limited**
Design Vehicle	**WB-67**	**WB-67**	**WB-67**
Pavement Type	**PCC (travel lanes and shoulders)**	**N/A**	**PCC (travel lanes) Asphalt-(shoulder)**

Mainline Design Features: SR 400/US 19 NB Off Ramp (Urban Freeway Ramp)

Feature	Existing	Standard*	Proposed
Typical Section			
- Number of Lanes	4	N/A	5
- Lane Width(s)	12 ft.	12 ft. min	12 ft.
- Median Width & Type	N/A	N/A	N/A
- Outside Shoulder or Border Area Width	12 ft. paved, 4 ft. grassed	12 ft. paved, 2 ft. grassed	12 ft. paved, 4 ft grassed
- Outside Shoulder Slope	2:1 Max	2:1 Max	2:1 Max
- Inside Shoulder Width	8 ft. paved, 3 ft. grassed	4 ft. paved, 4 ft. grassed	8 ft. paved, 3 ft. grassed
- Sidewalks	N/A	N/A	N/A
- Auxiliary Lanes	1 (Flex Lane)	N/A	1
- Bike Lanes	0	N/A	0
Posted Speed	N/A		N/A
Design Speed	55 mph	55 mph	55 mph
Min Horizontal Curve Radius	9000 ft.	1685 ft.	9000 ft.
Maximum Superelevation Rate	6% Max	6% Max	6% Max
Maximum Grade	4% Max	4% Max	4% Max
Access Control	Limited	Limited	Limited
Design Vehicle	WB-67	WB-67	WB-67
Pavement Type	PCC (travel lanes) Asphalt-(shoulder)	N/A	PCC (travel lanes) Asphalt-(shoulder)

Crossroad Design Features: Westbound CS928401/Windward Parkway (Urban Collector Street)

Feature	Existing	Standard*	Proposed
Typical Section			
- Number of Lanes	2	N/A	3 (1 Aux Lane)
- Lane Width(s)	12 ft.	11 ft. min	11-14 ft.
- Median Width & Type	14 ft. to 20 ft. raised	12 ft. min	14 ft. to 32 ft. raised
- Outside Shoulder or Border Area Width	10 ft. min urban	10 ft. min urban	11 ft.
- Outside Shoulder Slope	2:1 Max	2:1 Max	2:1 Max
- Inside Shoulder Width	N/A	N/A	N/A
- Sidewalks	5 ft.	4 ft. min	6 ft.
- Auxiliary Lanes	N/A	N/A	N/A
- Bike Lanes	4 ft.	4 ft. min	4 ft.
Posted Speed	35 mph		35 mph
Design Speed	35 mph	35 mph	35 mph
Min Horizontal Curve Radius	1402 ft.	704 ft.	1402 ft.
Maximum Superelevation Rate	7% Max	4% Max	4% Max
Maximum Grade	5.6% Max	8% Max	5.6% Max
Access Control	Full	Full	Full
Design Vehicle	WB-67	WB-67	WB-67
Pavement Type	Asphalt	N/A	Asphalt

Major Interchanges/Intersections: The SR 400/US 19 and Windward Parkway Interchange and Windward Parkway at Westside Parkway/Deerfield Parkway intersection are located within the project limits. Both the intersection and interchange are signalized.

Lighting required: ☒ No ☐ Yes

Off-site Detours Anticipated: ☒ No ☐ Yes ☐ Undetermined

Transportation Management Plan [TMP] Required: ☒ No ☐ Yes

If Yes: Project classified as: ☒ Non-Significant ☐ Significant

TMP Components Anticipated: ☒ TTC ☐ TO ☐ PI

Design Exceptions to FHWA/AASHTO controlling criteria anticipated:

FHWA/AASHTO Controlling Criteria	No	Undeter-mined	Yes	Appvl Date (if applicable)
1. Design Speed	☒	☐	☐	
2. Lane Width	☒	☐	☐	
3. Shoulder Width	☒	☐	☐	
4. Bridge Width	☒	☐	☐	
5. Horizontal Alignment	☒	☐	☐	
6. Superelevation	☒	☐	☐	
7. Vertical Alignment	☒	☐	☐	
8. Grade	☒	☐	☐	
9. Stopping Sight Distance	☒	☐	☐	
10. Cross Slope	☒	☐	☐	
11. Vertical Clearance	☒	☐	☐	
12. Lateral Offset to Obstruction	☒	☐	☐	
13. Bridge Structural Capacity	☒	☐	☐	

Design Variances to GDOT Standard Criteria anticipated:

GDOT Standard Criteria	Reviewi ng Office	No	Undeter--mined	Yes	Appvl Date (if applicable)
1. Access Control/Median Openings	DP&S	☒	☐	☐	
2. Intersection Sight Distance	DP&S	☒	☐	☐	
3. Intersection Skew Angle	DP&S	☒	☐	☐	
4. Lateral Offset to Obstruction	DP&S	☒	☐	☐	
5. Rumble Strips	DP&S	☒	☐	☐	
6. Safety Edge	DP&S	☒	☐	☐	
7. Median Usage	DP&S	☒	☐	☐	
8. Roundabout Illumination Levels	DP&S	☒	☐	☐	
9. Complete Streets	DP&S	☒	☐	☐	
10. ADA & PROWAG	DP&S	☒	☐	☐	
11. GDOT Construction Standards	DP&S	☒	☐	☐	
12. GDOT Drainage Manual	DP&S	☒	☐	☐	
13. GDOT Bridge & Structural Manual	Bridges	☒	☐	☐	

VE Study anticipated: ☒ No ☐ Yes

UTILITY AND PROPERTY

Temporary State Route needed: ☒ No ☐ Yes ☐ Undetermined

Railroad Involvement: There are no railroads within the project limits.

Utility Involvements:

Utility Owner	Utility Type
Georgia Power	Electricity
GDOT Traffic Operations	Traffic Signals/ITS
City of Alpharetta	Traffic Signals
TW Telecommunications	Telecommunications
AT&T	Telecommunications
Atlanta Gas Light	Natural Gas
Sawnee EMC	Electricity
Fulton Water and Sewer	Water/Sewer
Comcast	Cable
City of Alpharetta	Lighting

SUE Required: ☒ No ☐ Yes ☐ Undetermined

Public Interest Determination Policy and Procedure recommended? ☒ No ☐ Yes

Right-of-Way (ROW):

SR 400/US 19: Existing width: Varies 325 ft. to 905 ft.
Proposed width: Varies 325 ft. to 905 ft.

CS 928401/Windward Parkway: Existing width: Varies 105 ft. to 168 ft.
Proposed width: Varies 105 ft. to 168 ft.

Required Right-of-Way anticipated: ☐ None ☒ Yes ☐ Undetermined
Easements anticipated: ☐ None ☒ Temporary ☒ Permanent ☐ Utility ☐ Other

Anticipated total number of impacted parcels: 9
Displacements anticipated: Businesses: 0
Residences: 0
Other: 0
Total Displacements: 0

Location and Design approval: ☐ Not Required ☒ Required

CONTEXT SENSITIVE SOLUTIONS

Issues of Concern: Bicycle access, pedestrian protection and accessibility on Windward Parkway.

Context Sensitive Solutions Proposed: Provide bicycle lanes along Windward Parkway to tie into the bicycle lanes recently added to Windward Parkway by the city of Alpharetta. The proposed bicycle lanes for Windward Parkway will not tie into a state designated bike route. The median on Windward Parkway will be extended to Westside Parkway/Deerfield Parkway to provide a refuge for pedestrians.

ENVIRONMENTAL & PERMITS

Anticipated Environmental Document:

GEPA: ☐ **NEPA:** ☒ CE ☐ EA/FONSI ☐ EIS

MS4 Permit Compliance – Is the project located in a MS4 area? ☐ No ☒ Yes

The project is located within an MS4 area. GDOT MS4 design will be applied to SR 400/US 19 since it is part of state route, however CS 928401/Windward Parkway will not include GDOT MS4 design, and will be coordinated with the City of Alpharetta.

Environmental Permits/Variances/Commitments/Coordination anticipated:

Permit/ Variance/ Commitment/ Coordination Anticipated	No	Yes	Remarks
1. U.S. Coast Guard Permit	☒	☐	
2. Forest Service/Corps Land	☒	☐	
3. CWA Section 404 Permit	☒	☒	Section 404 NWP 23
4. Tennessee Valley Authority Permit	☒	☐	
5. Buffer Variance	☐	☒	
6. Coastal Zone Management Coordination	☒	☐	
7. NPDES	☐	☒	Notice of Intent (NOI)
8. FEMA	☒	☐	
9. Cemetery Permit	☒	☐	
10. Other Permits	☒	☐	
11. Other Commitments	☒	☐	
12. Other Coordination	☒	☐	

Is a PAR required? ☒ No ☐ Yes ☐ Completed – Date:

Environmental Comments and Information:

NEPA/GEPA: A NEPA Categorical Exclusion is anticipated for this project. Section 4(f) impacts are not anticipated.

Ecology: An Ecology Assessment Addendum is underway.

- Three waters of the US were previously identified. One wetland may be impacted by the project.
- One non-buffered state water was identified.
- A stream buffer variance may be required.
- There is no T & E habitat or migratory bird habitat present.
- No other significant ecological concerns were identified.

History: No eligible historic resources were previously identified within the APE of the project corridor during the initial field survey. The project will be reevaluated for historic resources.

Archeology: An archaeology survey addendum is underway. The area is highly developed and the potential for archaeology sites is low. However, updated field work will be conducted.

Air Quality:

Is the project located in a PM 2.5 Non-attainment area? ☐ No ☒ Yes

Is the project located in an Ozone Non-attainment area? ☐ No ☒ Yes

Carbon Monoxide hotspot analysis: ☒ Required ☐ Not Required ☐ TBD

The project is in the region's air quality conforming analysis.

Noise Effects: The project will require analysis for highway traffic noise impacts. A Type 1 Noise Impact Assessment for will be prepared.

Public Involvement: Public Involvement Open House anticipated.

Major stakeholders: Traveling public, local commercial property owners, and legislatures.

CONSTRUCTION

Issues potentially affecting constructability/construction schedule: High traffic volumes may require off-hour construction.

Early Completion Incentives recommended for consideration: ☒ No ☐ Yes

COORDINATION, ACTIVITIES, RESPONSIBILITIES, AND COSTS

Initial Concept Meeting: N/A

Concept Meeting: The concept team meeting was held on May 15, 2012, and included representatives from GDOT, GS&P, Atkins, City of Alpharetta, North Fulton CID, Kimley-Horn, and Edwards-Pitman Environmental. The meeting included discussions of the City of Alpharetta's work on the design for a northbound right turn lane on Westside Parkway at the Windward Parkway intersection. GDOT recommended the turn lane be removed from the concept, and Alpharetta requested the turn lane remain in the concept. The cities of Alpharetta and Milton noted that they do not have any proposed road improvements planned in the vicinity of the proposed project.

Other coordination to date: A coordination meeting was held on January 26, 2015, and included representatives from GS&P, GDOT, Atkins, and Kimley-Horn. It was noted at the meeting that the Project Framework Agreement (PFA) was approved by the City of Alpharetta on 1/26/15. Modifications to the flex lane on the SR 400 NB off ramp onto Windward Parkway were also discussed. Please refer to the appendix for the meeting minutes.

Project Activity	Party Responsible for Performing Task(s)
Concept Development	GS&P
Design	GS&P with GDOT Review
Right-of-Way Acquisition	City of Alpharetta (COA) and NFCID
Utility Relocation	City of Alpharetta (COA) and NFCID
Letting to Contract	GDOT
Construction Supervision	GDOT
Providing Material Pits	GDOT
Providing Detours	GDOT
Environmental Studies, Documents, & Permits	Edwards-Pitman
Environmental Mitigation	GDOT
Construction Inspection & Materials Testing	GDOT

Project Cost Estimate Summary and Funding Responsibilities:

	Breakdown of PE	ROW	Utility	CST*	Environmental Mitigation	Total Cost
Funded By	NFCID	NFCID/COA	NFCID/COA	GDOT/Locals	N/A	
$ Amount	$50,000	$858,000	$0.00	$3,763,503.45	$0.00	$4,671,503.45
Date of Estimate		3/26/15	3/26/15	5/11/15		

*CST Cost includes: Construction, Engineering and Inspection, Contingencies and Liquid AC Cost Adjustment.

ALTERNATIVES DISCUSSION

Preferred Alternative: SR 400 Northbound Dual Lane Off Ramp with Triple Left Turns onto Windward Parkway

Estimated Property Impacts:	**9**	**Estimated Total Cost:**	**$4,671,503.45**
Estimated ROW Cost:	**$858,000.00**	**Estimated CST Time:**	**18 months**

Rationale: The primary cause of the congestion at this interchange is the high volume of traffic turning left onto Windward Parkway westbound from the SR 400 NB exit ramp. The current SR 400 northbound off ramp is only one lane at the divergence point with SR 400 and a separate deceleration lane on SR 400 is not provided. Based on field observations, the SR 400 northbound off ramp is a constraint and causes significant queues and reductions in travel speeds on SR 400. The addition of a paved should on SR 400 NB will allow for a two lane exit; and, three left turn lanes onto Windward Parkway westbound, thereby reducing congestion on SR 400 northbound.

To improve the northbound SR 400 divergence area, the divergence area was analyzed with the HCS software with the existing single lane exit and with the proposed dual lane exit with a separate 500 foot deceleration lane for the Year 2035.

Windward Parkway westbound will be widened from the SR 400 ramp westbound to accommodate the additional left turn lane on the SR 400 NB ramp. This lane will be dropped as a right turn only lane at Deerfield Parkway; the decision to drop the lane at this intersection was made due to the high volume of traffic turning right onto Deerfield Parkway northbound from Windward Parkway westbound. A second westbound left turn lane will be added on Windward Parkway at the intersection with Westside Parkway to account for projected left turning volumes onto southbound Westside Parkway. Symmetrical widening for the second left turn lane was considered, however, it was determined that asymmetrical widening would provide fewer overall construction and right of way impacts at the Windward Parkway and Deerfield Parkway/Westside Parkway intersection.

This was determined to be the preferred alternative since it fulfills the need and purpose of the project.

No-Build Alternative

Estimated Property Impacts:	**0**	**Estimated Total Cost:**	**$0.00**
Estimated ROW Cost:	**$0.00**	**Estimated CST Time:**	**N/A**

Rationale: This alternative would not meet the need and purpose of the project and was therefore not considered a viable alternative.

LIST OF ATTACHMENTS/SUPPORTING DATA

1. Concept Layout
2. Typical sections
3. Detailed Cost Estimates:
    a. Construction including Engineering and Inspection and Contingencies
    b. Completed Liquid AC Cost Adjustment forms
    c. Right-of-Way
    d. Utilities
4. Traffic diagrams
5. Capacity analysis summary (tabular format)
6. ARC Project Fact Sheet (Verification of Conforming plan's network schematics showing thru lanes)
7. Minutes of Concept meetings
8. MS4 Pond Locations

APPROVALS

Concur: _____
Director of Engineering

Approve: Margaret B. Pickle _____ 7.30.15
Chief Engineer Date

ATTACHMENT 1- CONCEPT LAYOUT

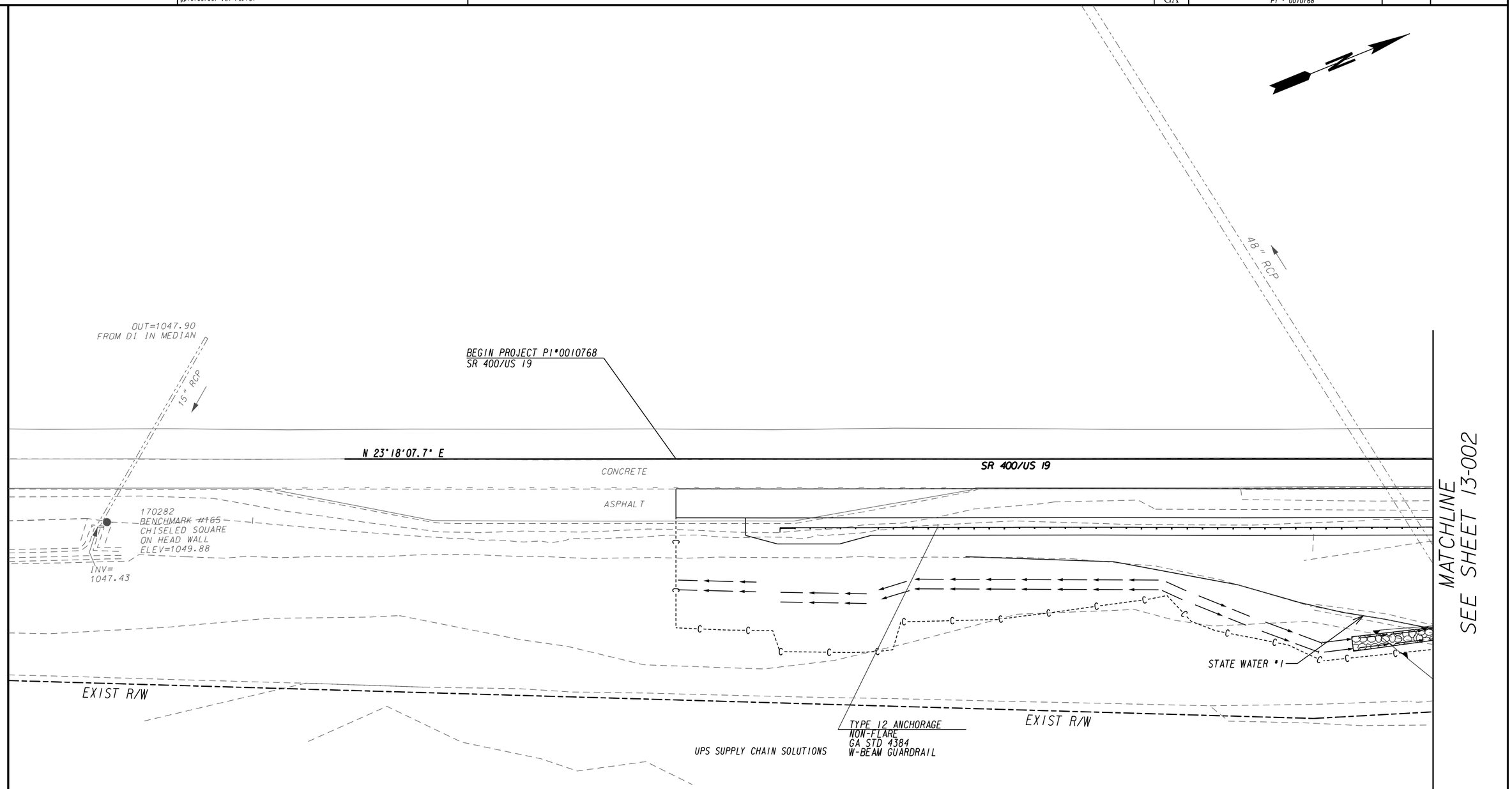

PROPERTY AND EXISTING R/W LINE
REQUIRED R/W LINE
CONSTRUCTION LIMITS
EASEMENT FOR CONSTR & MAINTENANCE OF SLOPES
EASEMENT FOR CONSTR OF SLOPES
EASEMENT FOR CONSTR OF DRIVES

BEGIN LIMIT OF ACCESS.....BLA
END LIMIT OF ACCESS.....ELA
LIMIT OF ACCESS
REQ'D R/W & LIMIT OF ACCESS
ORANGE BARRIER FENCE
ESA - ENV. SENSITIVE AREA (SEE ERIT 4-)

NORTH FULTON
COMMUNITY IMPROVEMENT DISTRICT

GRESHAM SMITH AND PARTNERS

SCALE IN FEET
0 20 40 80

REVISION DATES

STATE OF GEORGIA
DEPARTMENT OF TRANSPORTATION
OFFICE: PROGRAM DELIVERY

MAINLINE PLAN
SR 400/US 19

PROJECT: PI#0010768
COUNTY: FULTON

DRAWING No. 13-001

12/14/2012 GPLN

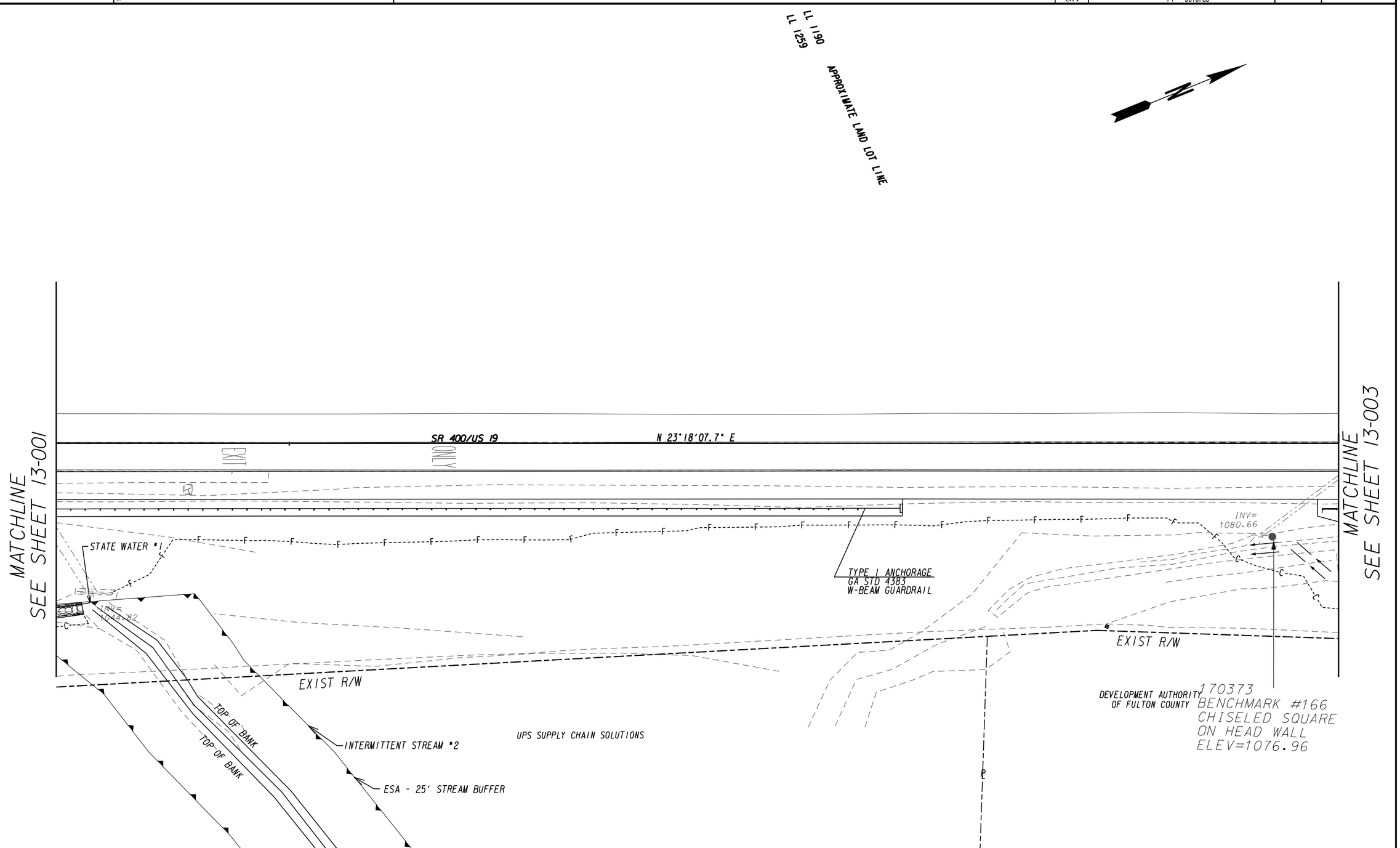

PROPERTY AND EXISTING R/W LINE
REQUIRED R/W LINE
CONSTRUCTION LIMITS
EASEMENT FOR CONSTR & MAINTENANCE OF SLOPES
EASEMENT FOR CONSTR OF SLOPES
EASEMENT FOR CONSTR OF DRIVES

BEGIN LIMIT OF ACCESS.....BLA
END LIMIT OF ACCESS.....ELA
LIMIT OF ACCESS
REQ'D R/W & LIMIT OF ACCESS
ORANGE BARRIER FENCE
ESA - ENV. SENSITIVE AREA (SEE ERIT 4-)

NORTH FULTON
COMMUNITY IMPROVEMENT DISTRICT

GRESHAM SMITH AND PARTNERS

SCALE IN FEET
0 20 40 80

REVISION DATES

STATE OF GEORGIA
DEPARTMENT OF TRANSPORTATION
OFFICE: PROGRAM DELIVERY

MAINLINE PLAN
SR 400/US 19

PROJECT: PI#0010768
COUNTY: FULTON

DRAWING No. 13- 002

12/14/2012 GPLN

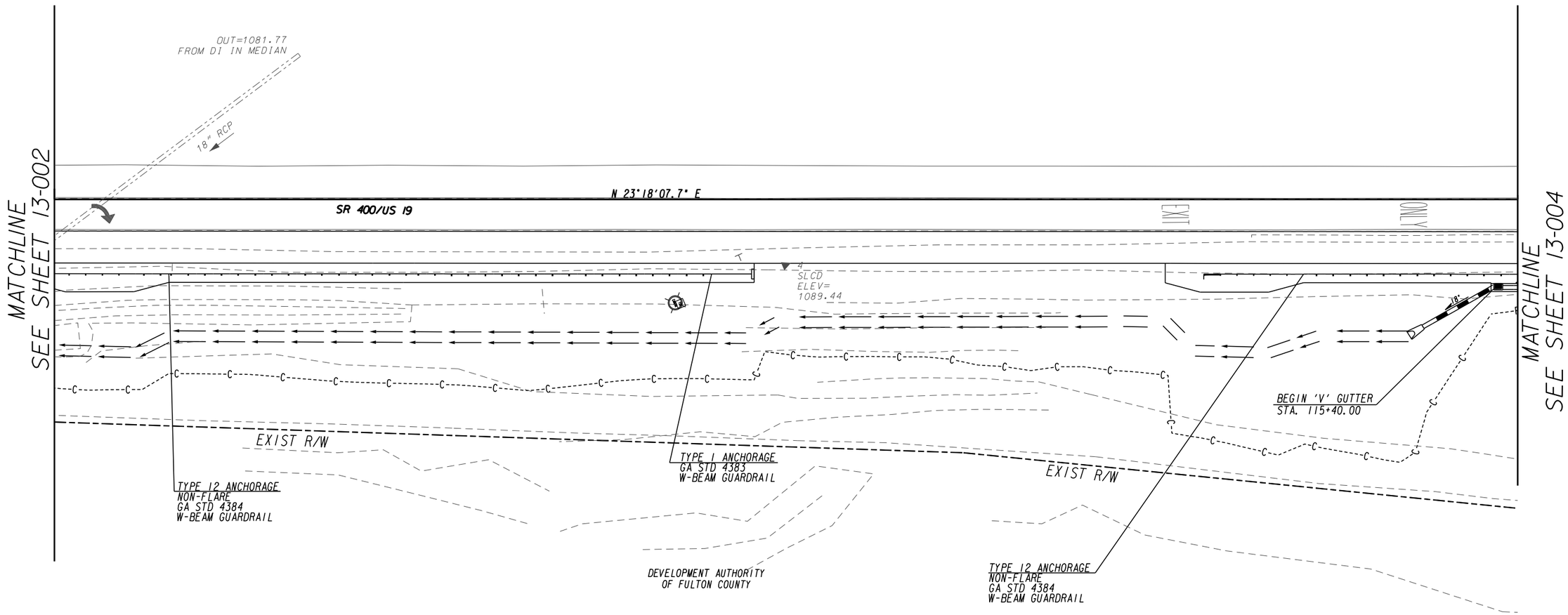

PROPERTY AND EXISTING R/W LINE
REQUIRED R/W LINE
CONSTRUCTION LIMITS
EASEMENT FOR CONSTR & MAINTENANCE OF SLOPES
EASEMENT FOR CONSTR OF SLOPES
EASEMENT FOR CONSTR OF DRIVES

BEGIN LIMIT OF ACCESS.....BLA
END LIMIT OF ACCESS.....ELA
LIMIT OF ACCESS
REQ'D R/W & LIMIT OF ACCESS
ORANGE BARRIER FENCE
ESA - ENV. SENSITIVE AREA (SEE ERIT 4-)

NORTH FULTON
COMMUNITY IMPROVEMENT DISTRICT

GRESHAM SMITH AND PARTNERS

SCALE IN FEET
0 20 40 80

REVISION DATES

STATE OF GEORGIA
DEPARTMENT OF TRANSPORTATION
OFFICE: PROGRAM DELIVERY

MAINLINE PLAN
SR 400/US 19

PROJECT: PI#0010768
COUNTY: FULTON

DRAWING No. 13- 003

12/14/2012 GPLN

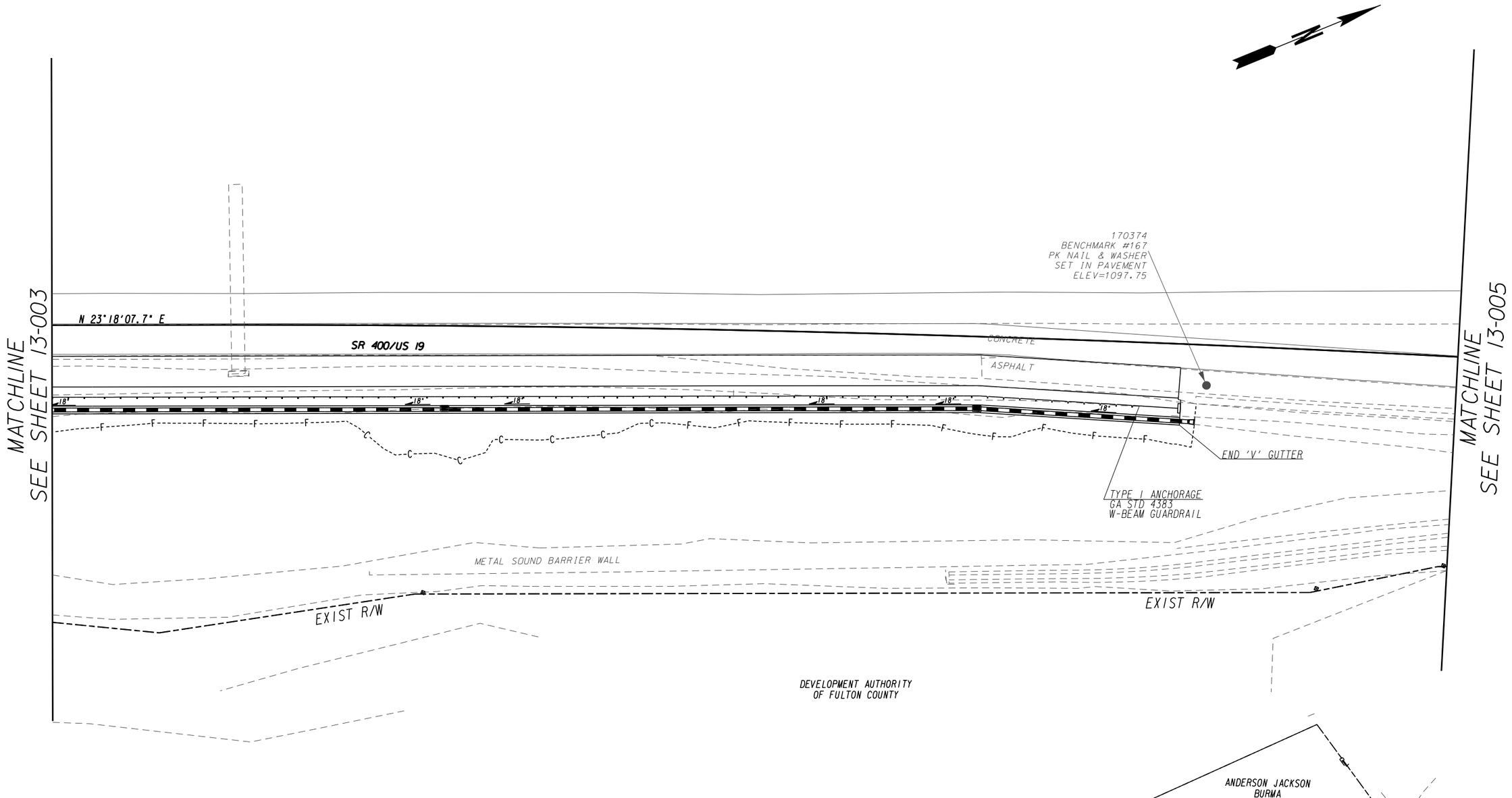

PROPERTY AND EXISTING R/W LINE
REQUIRED R/W LINE
CONSTRUCTION LIMITS
EASEMENT FOR CONSTR & MAINTENANCE OF SLOPES
EASEMENT FOR CONSTR OF SLOPES
EASEMENT FOR CONSTR OF DRIVES

BEGIN LIMIT OF ACCESS.....BLA
END LIMIT OF ACCESS.....ELA
LIMIT OF ACCESS
REQ'D R/W & LIMIT OF ACCESS
ORANGE BARRIER FENCE
ESA - ENV. SENSITIVE AREA (SEE ERIT 4-)

NORTH FULTON
COMMUNITY IMPROVEMENT DISTRICT

GRESHAM SMITH AND PARTNERS

SCALE IN FEET
0 20 40 80

REVISION DATES

STATE OF GEORGIA
DEPARTMENT OF TRANSPORTATION
OFFICE: PROGRAM DELIVERY

MAINLINE PLAN
SR 400/US 19

PROJECT: PI#0010768
COUNTY: FULTON

DRAWING No. 13-004

12/14/2012 GPLN

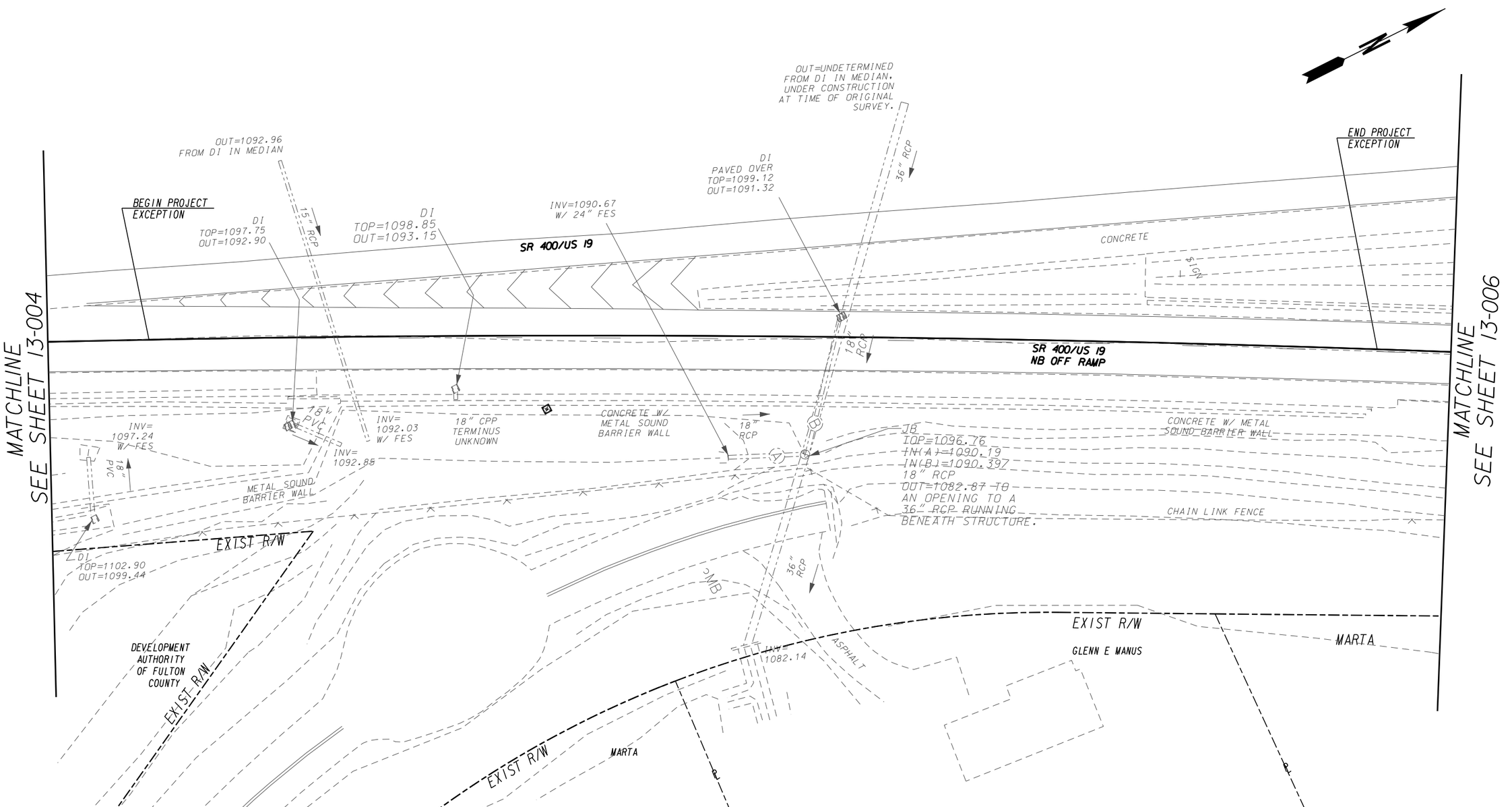

PROPERTY AND EXISTING R/W LINE	
REQUIRED R/W LINE	
CONSTRUCTION LIMITS	—C— —F—
EASEMENT FOR CONSTR & MAINTENANCE OF SLOPES	
EASEMENT FOR CONSTR OF SLOPES	
EASEMENT FOR CONSTR OF DRIVES	

BEGIN LIMIT OF ACCESS	BLA
END LIMIT OF ACCESS	ELA
LIMIT OF ACCESS	
REQ'D R/W & LIMIT OF ACCESS	
ORANGE BARRIER FENCE	
ESA - ENV. SENSITIVE AREA (SEE ERIT 4-)	

NORTH FULTON
COMMUNITY IMPROVEMENT DISTRICT

GRESHAM SMITH AND PARTNERS

SCALE IN FEET
0 20 40 80

REVISION DATES

STATE OF GEORGIA
DEPARTMENT OF TRANSPORTATION
OFFICE: PROGRAM DELIVERY

MAINLINE PLAN
SR 400/US 19

PROJECT: PI#0010768
COUNTY: FULTON

DRAWING No.
13- 005

12/14/2012 GPLN

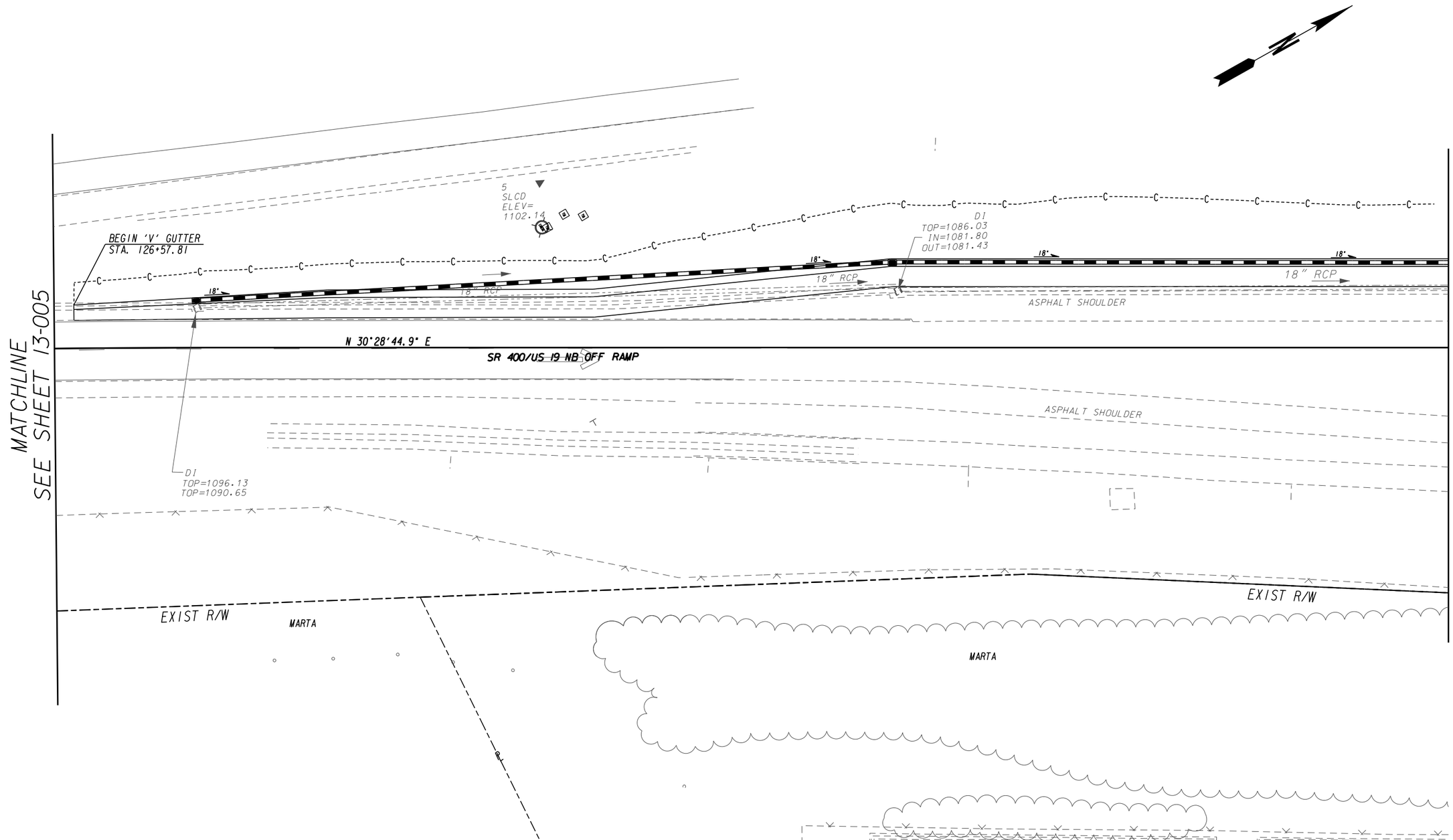

PROPERTY AND EXISTING R/W LINE
REQUIRED R/W LINE
CONSTRUCTION LIMITS
EASEMENT FOR CONSTR & MAINTENANCE OF SLOPES
EASEMENT FOR CONSTR OF SLOPES
EASEMENT FOR CONSTR OF DRIVES

BEGIN LIMIT OF ACCESS.....BLA
END LIMIT OF ACCESS.....ELA
LIMIT OF ACCESS
REQ'D R/W & LIMIT OF ACCESS
ORANGE BARRIER FENCE
ESA - ENV. SENSITIVE AREA (SEE ERIT 4-)

NORTH FULTON
COMMUNITY IMPROVEMENT DISTRICT

GRESHAM SMITH AND PARTNERS

SCALE IN FEET
0 20 40 80

REVISION DATES

STATE OF GEORGIA
DEPARTMENT OF TRANSPORTATION
OFFICE: PROGRAM DELIVERY

MAINLINE PLAN
SR 400/US 19

PROJECT: PI#0010768
COUNTY: FULTON

DRAWING No. 13- 006

12/14/2012 GPLN

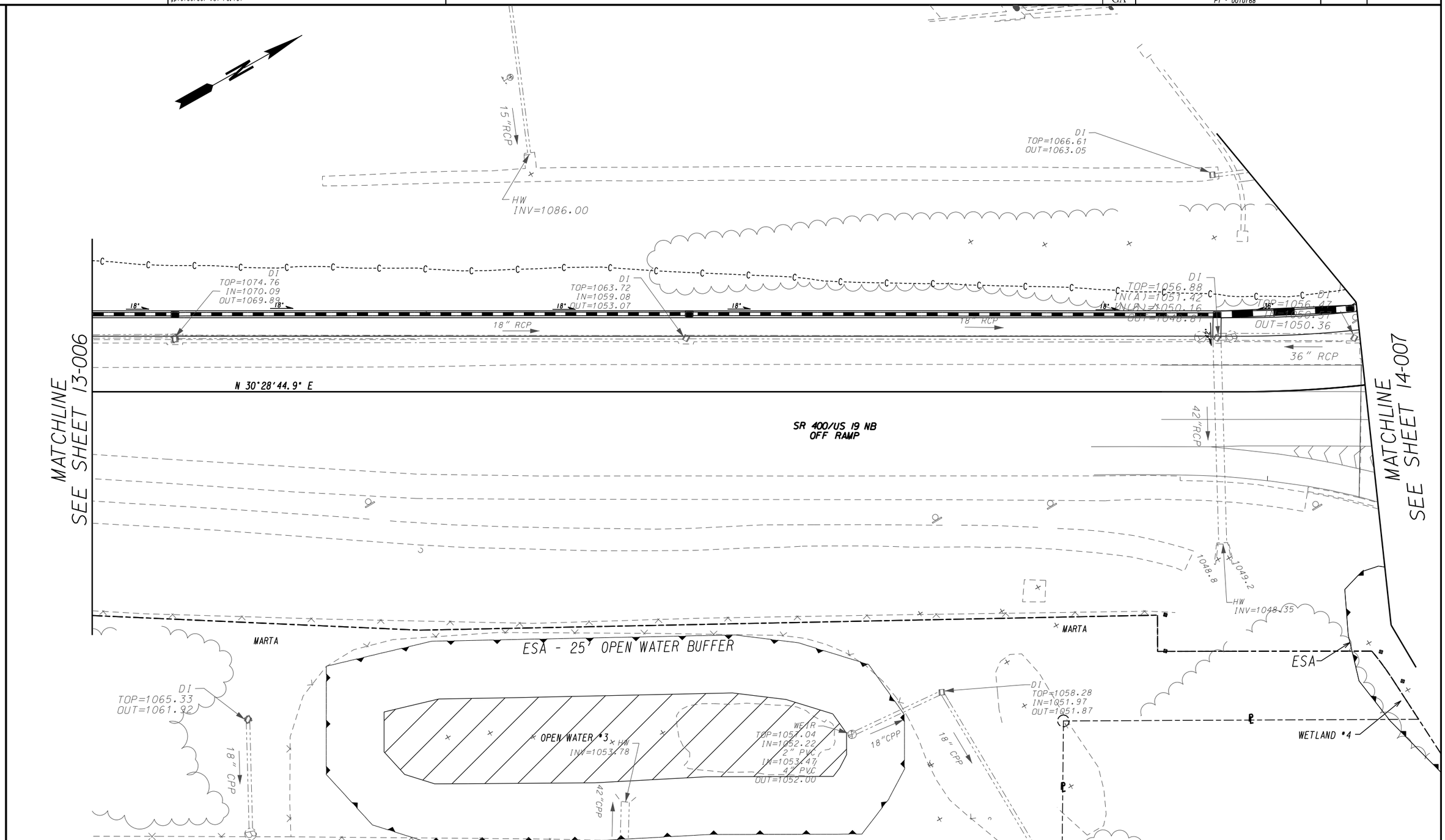

PROPERTY AND EXISTING R/W LINE	
REQUIRED R/W LINE	
CONSTRUCTION LIMITS	
EASEMENT FOR CONSTR & MAINTENANCE OF SLOPES	
EASEMENT FOR CONSTR OF SLOPES	
EASEMENT FOR CONSTR OF DRIVES	

BEGIN LIMIT OF ACCESS	BLA
END LIMIT OF ACCESS	ELA
LIMIT OF ACCESS	
REQ'D R/W & LIMIT OF ACCESS	
ORANGE BARRIER FENCE	
ESA - ENV. SENSITIVE AREA (SEE ERIT 4-)	

NORTH FULTON
COMMUNITY IMPROVEMENT DISTRICT

GRESHAM SMITH AND PARTNERS

SCALE IN FEET
0 20 40 80

REVISION DATES

STATE OF GEORGIA
DEPARTMENT OF TRANSPORTATION
OFFICE: PROGRAM DELIVERY

MAINLINE PLAN
SR 400/US 19

PROJECT: PI#0010768
COUNTY: FULTON

DRAWING No.
13- 007

12/14/2012 GPLN

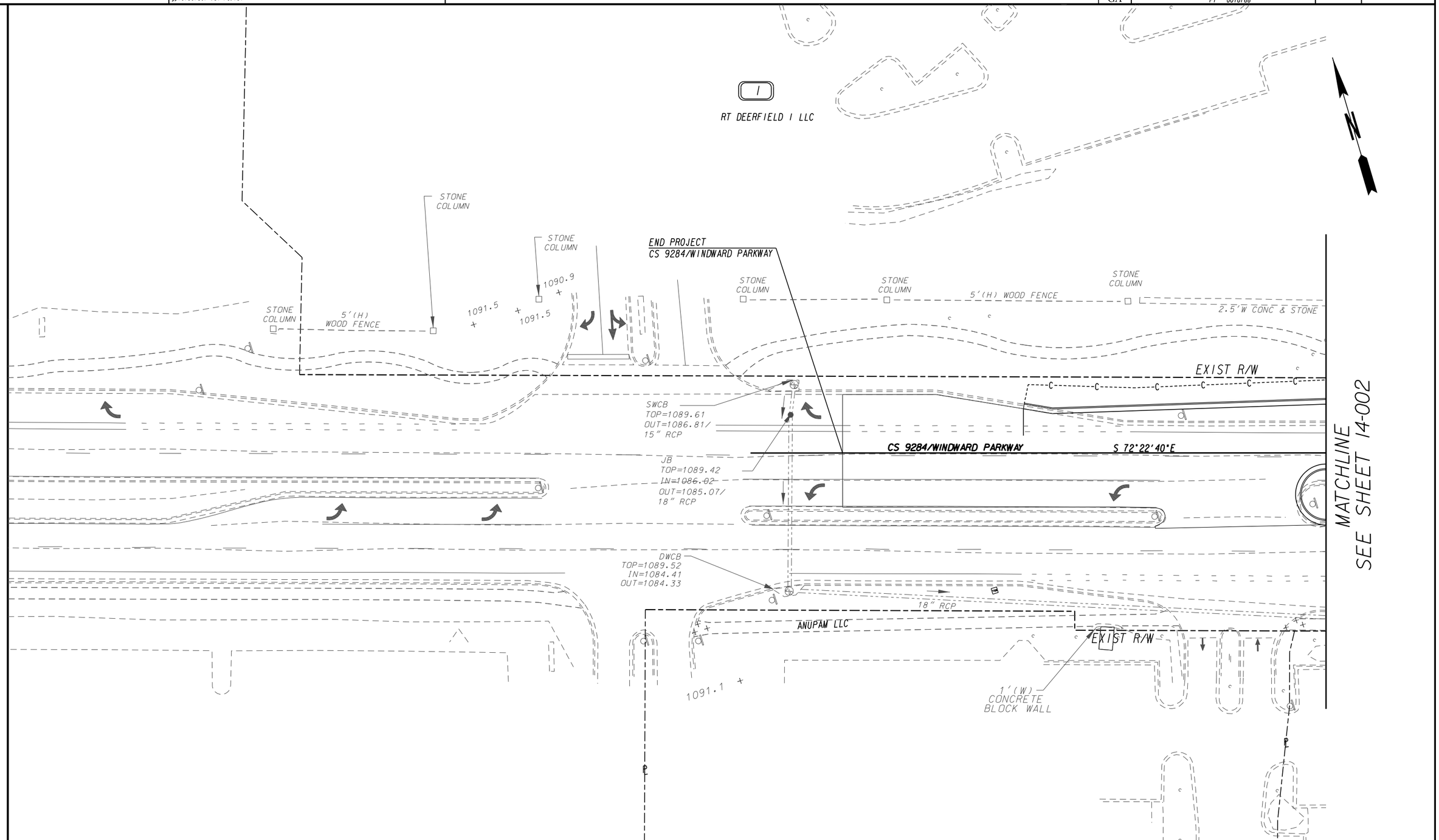

PROPERTY AND EXISTING R/W LINE	
REQUIRED R/W LINE	
CONSTRUCTION LIMITS	
EASEMENT FOR CONSTR & MAINTENANCE OF SLOPES	
EASEMENT FOR CONSTR OF SLOPES	
EASEMENT FOR CONSTR OF DRIVES	

BEGIN LIMIT OF ACCESS	BLA
END LIMIT OF ACCESS	ELA
LIMIT OF ACCESS	
REQ'D R/W & LIMIT OF ACCESS	
ORANGE BARRIER FENCE	
ESA - ENV. SENSITIVE AREA (SEE ERIT 4-)	

NORTH FULTON
COMMUNITY IMPROVEMENT DISTRICT

GRESHAM SMITH AND PARTNERS

SCALE IN FEET
0 20 40 80

REVISION DATES

STATE OF GEORGIA
DEPARTMENT OF TRANSPORTATION

OFFICE: PROGRAM DELIVERY

CROSSROAD PLAN
CS 9284 / WINDWARD PARKWAY

PROJECT: PI#0010768
COUNTY: FULTON

DRAWING No. 14- 001

12/14/2012 GPLN

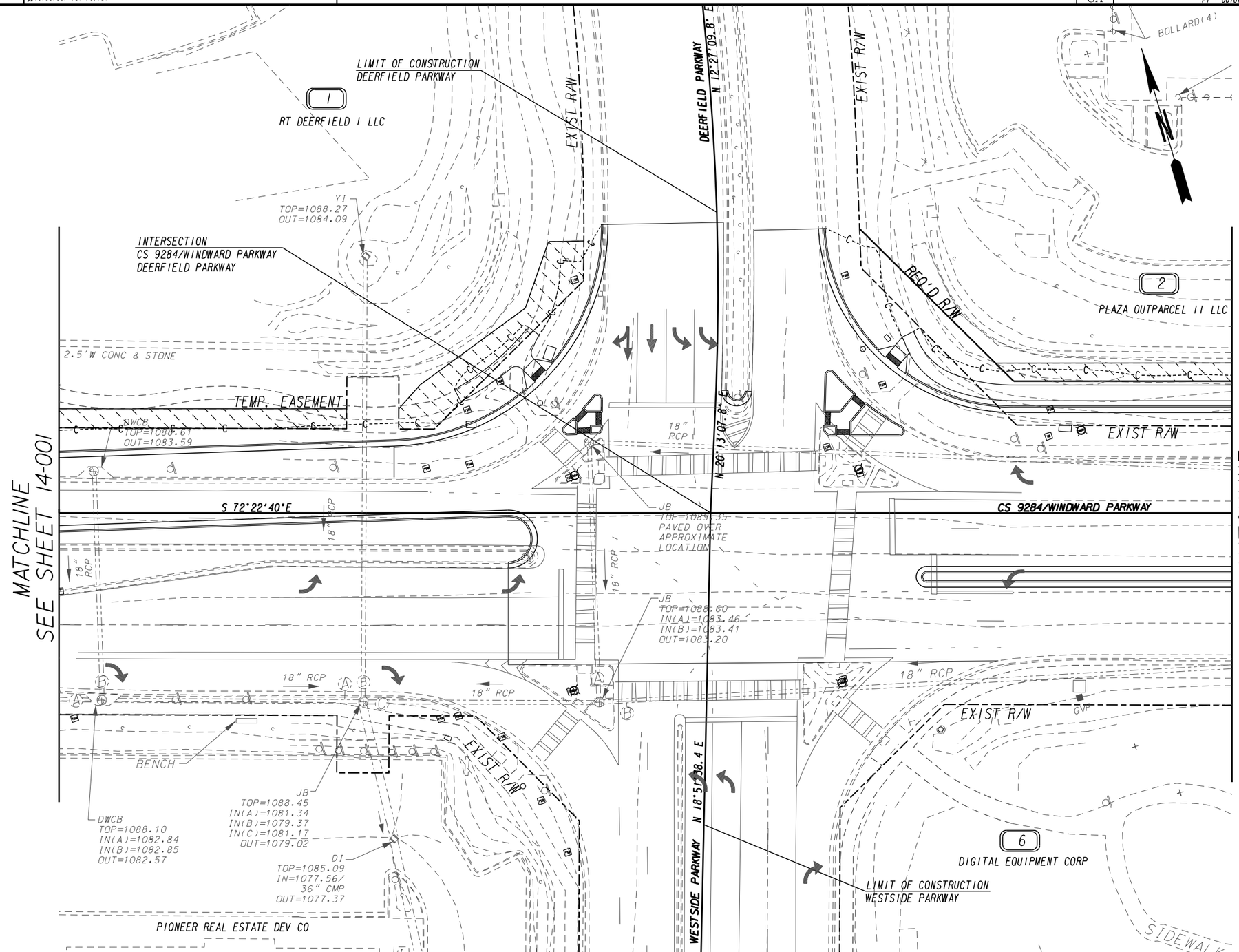

PROPERTY AND EXISTING R/W LINE
REQUIRED R/W LINE
CONSTRUCTION LIMITS
EASEMENT FOR CONSTR & MAINTENANCE OF SLOPES
EASEMENT FOR CONSTR OF SLOPES
EASEMENT FOR CONSTR OF DRIVES

BEGIN LIMIT OF ACCESS.....BLA
END LIMIT OF ACCESS.....ELA
LIMIT OF ACCESS
REQ'D R/W & LIMIT OF ACCESS
ORANGE BARRIER FENCE
ESA - ENV. SENSITIVE AREA (SEE ERIT 4-)

NORTH FULTON
COMMUNITY IMPROVEMENT DISTRICT

GRESHAM SMITH AND PARTNERS

SCALE IN FEET
0 20 40 80

REVISION DATES

STATE OF GEORGIA
DEPARTMENT OF TRANSPORTATION
OFFICE: PROGRAM DELIVERY

CROSSROAD PLAN
CS 9284 / WINDWARD PARKWAY
PROJECT: PI#0010768
COUNTY: FULTON

DRAWING No. 14- 002

12/14/2012 GPLN

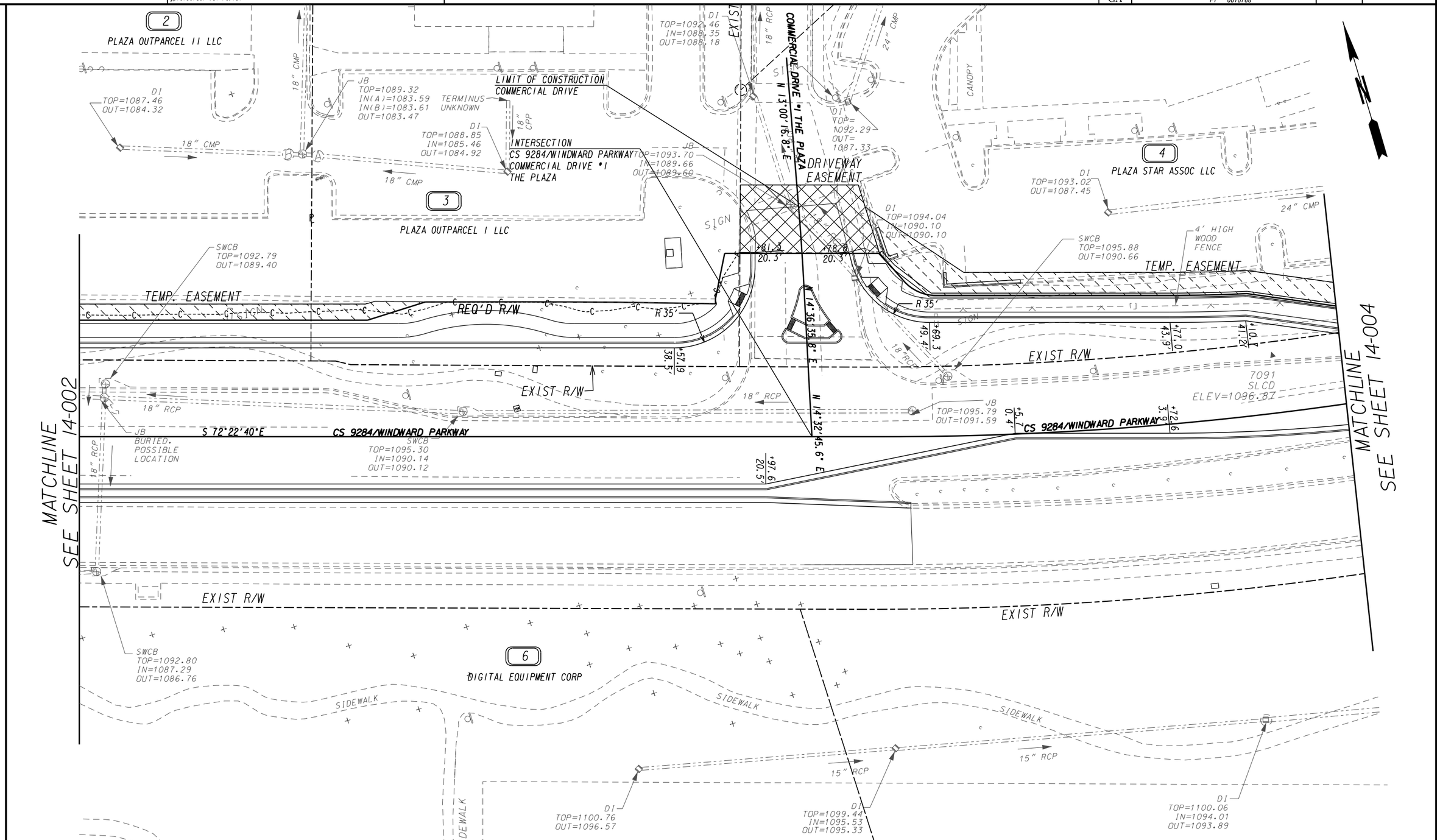

PROPERTY AND EXISTING R/W LINE	BEGIN LIMIT OF ACCESS.....BLA	
REQUIRED R/W LINE	END LIMIT OF ACCESS.....ELA	
CONSTRUCTION LIMITS	LIMIT OF ACCESS	
EASEMENT FOR CONSTR & MAINTENANCE OF SLOPES	REQ'D R/W & LIMIT OF ACCESS	
EASEMENT FOR CONSTR OF SLOPES	ORANGE BARRIER FENCE	
EASEMENT FOR CONSTR OF DRIVES	ESA - ENV. SENSITIVE AREA (SEE ERIT 4-)	

NORTH FULTON COMMUNITY IMPROVEMENT DISTRICT

GRESHAM SMITH AND PARTNERS

SCALE IN FEET 0 20 40 80

REVISION DATES

STATE OF GEORGIA
DEPARTMENT OF TRANSPORTATION
OFFICE: PROGRAM DELIVERY

CROSSROAD PLAN
CS 9284 / WINDWARD PARKWAY
PROJECT: PI*0010768
COUNTY: FULTON

DRAWING No. 14- 003

12/14/2012 GPLN

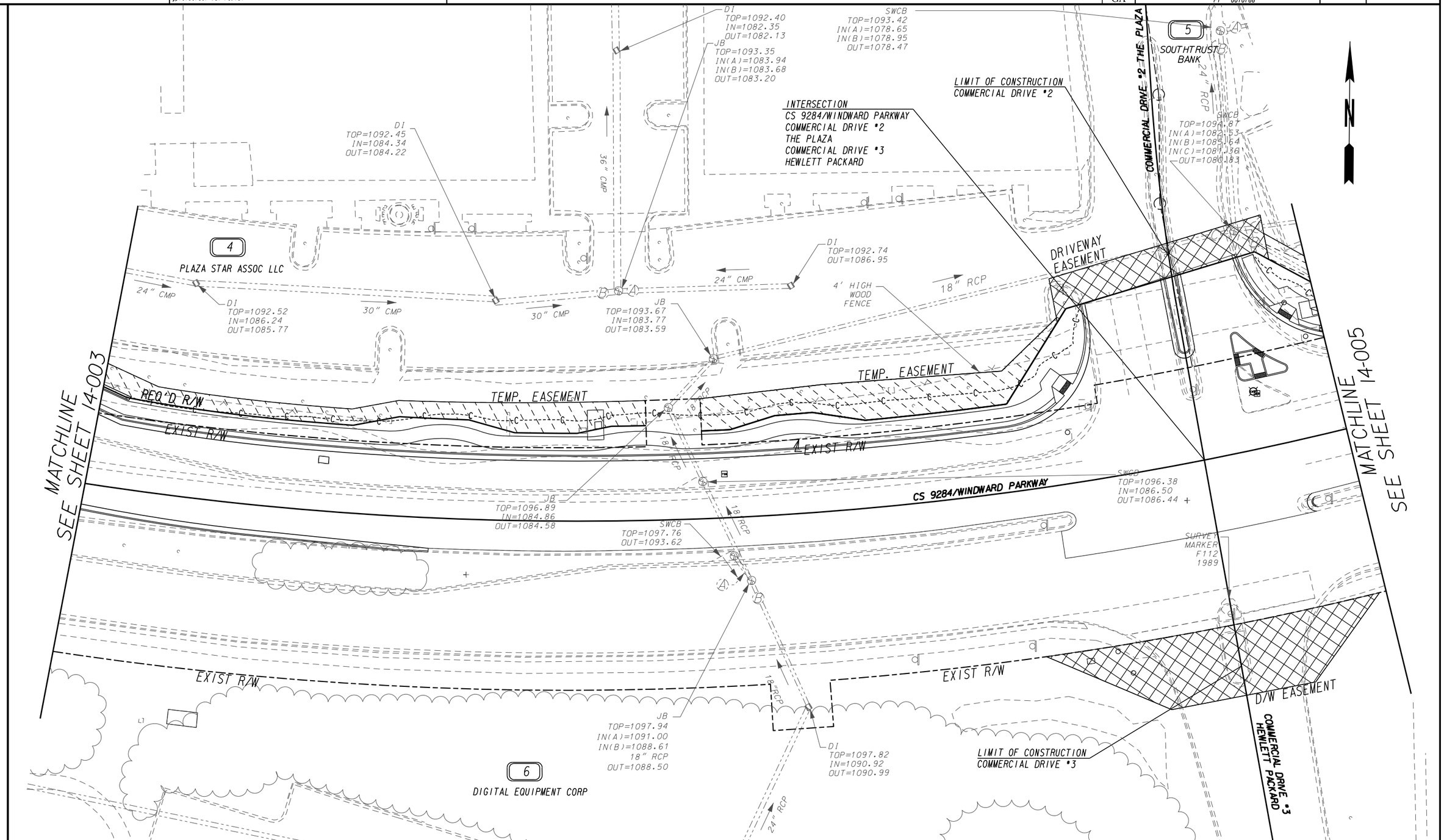

PROPERTY AND EXISTING R/W LINE
REQUIRED R/W LINE
CONSTRUCTION LIMITS
EASEMENT FOR CONSTR & MAINTENANCE OF SLOPES
EASEMENT FOR CONSTR OF SLOPES
EASEMENT FOR CONSTR OF DRIVES

BEGIN LIMIT OF ACCESS.....BLA
END LIMIT OF ACCESS.....ELA
LIMIT OF ACCESS
REQ'D R/W & LIMIT OF ACCESS
ORANGE BARRIER FENCE
ESA - ENV. SENSITIVE AREA (SEE ERIT 4-)

NORTH FULTON
COMMUNITY IMPROVEMENT DISTRICT

GRESHAM SMITH AND PARTNERS

SCALE IN FEET
0 20 40 80

REVISION DATES

STATE OF GEORGIA
DEPARTMENT OF TRANSPORTATION
OFFICE: PROGRAM DELIVERY

CROSSROAD PLAN
CS 9284 / WINDWARD PARKWAY
PROJECT: PI#0010768
COUNTY: FULTON

DRAWING No. 14- 004

12/14/2012 GPLN

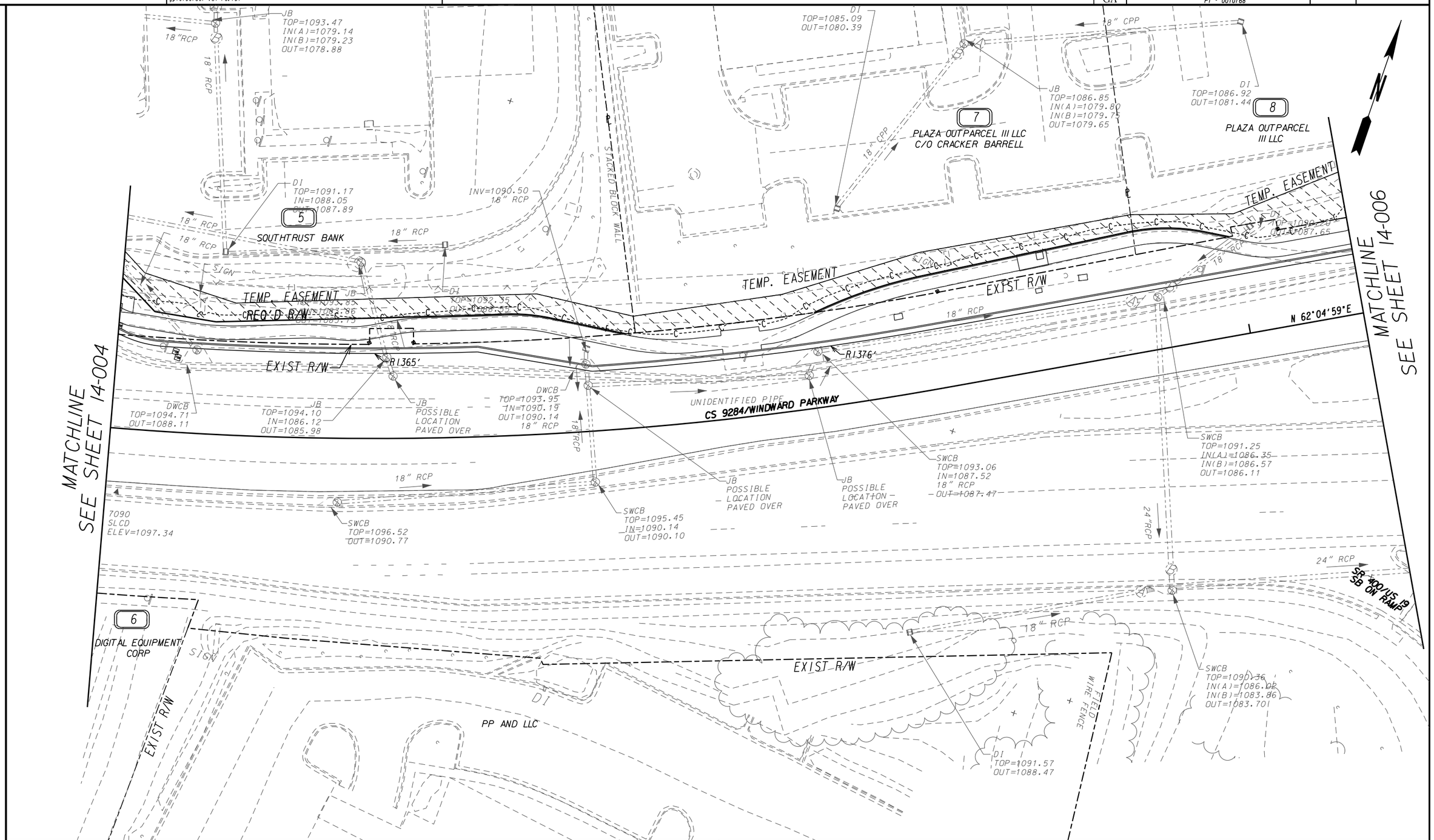

PROPERTY AND EXISTING R/W LINE	
REQUIRED R/W LINE	
CONSTRUCTION LIMITS	C F
EASEMENT FOR CONSTR & MAINTENANCE OF SLOPES	
EASEMENT FOR CONSTR OF SLOPES	
EASEMENT FOR CONSTR OF DRIVES	

BEGIN LIMIT OF ACCESS	BLA
END LIMIT OF ACCESS	ELA
LIMIT OF ACCESS	
REQ'D R/W & LIMIT OF ACCESS	
ORANGE BARRIER FENCE	
ESA - ENV. SENSITIVE AREA (SEE ERIT 4-)	

NORTH FULTON
COMMUNITY IMPROVEMENT DISTRICT

GRESHAM SMITH AND PARTNERS

SCALE IN FEET
0 20 40 80

REVISION DATES

STATE OF GEORGIA
DEPARTMENT OF TRANSPORTATION
OFFICE: PROGRAM DELIVERY

CROSSROAD PLAN
CS 9284 / WINDWARD PARKWAY
PROJECT: PI#0010768
COUNTY: FULTON

DRAWING No. 14-005

12/14/2012 GPLN

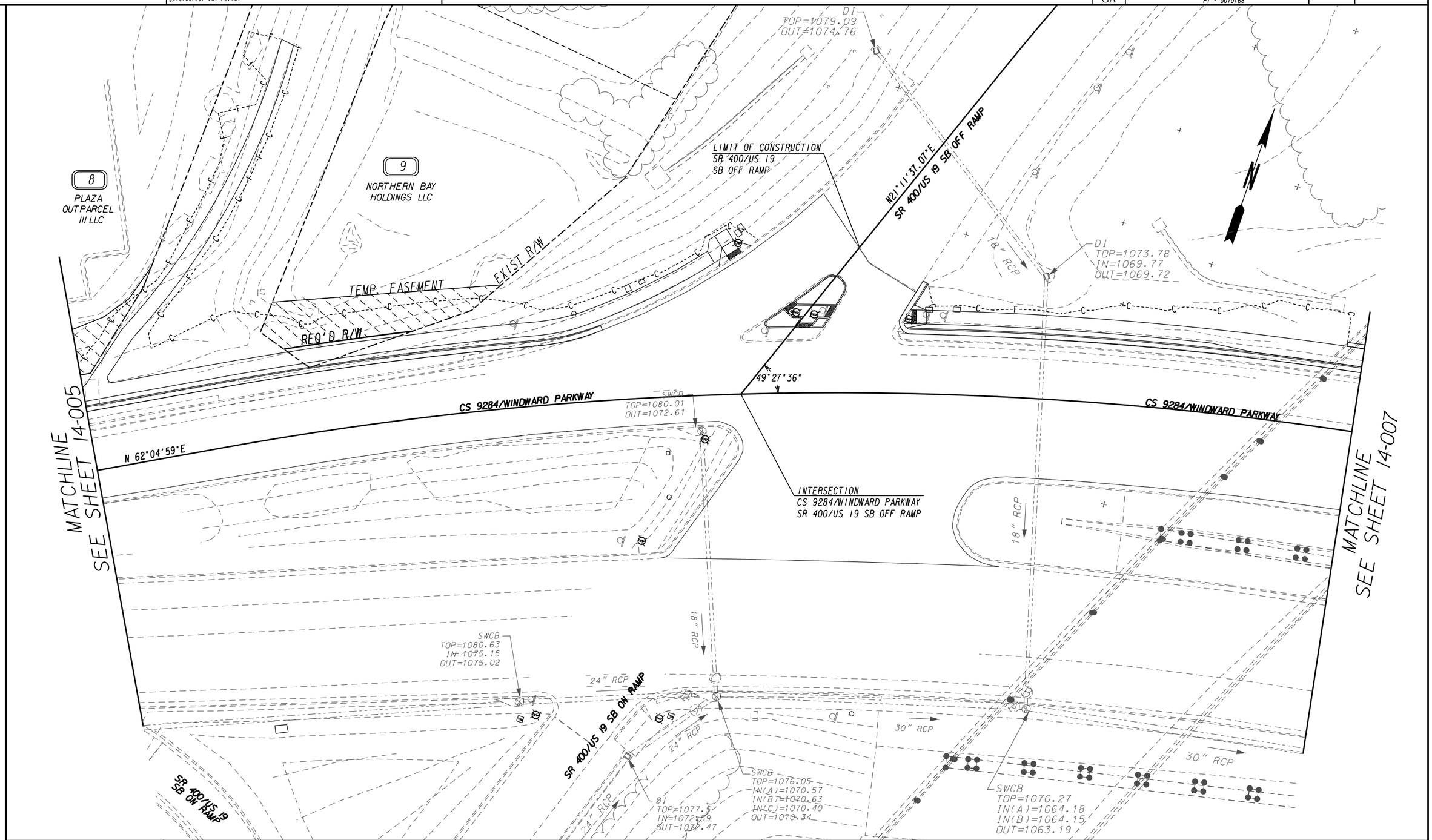

PROPERTY AND EXISTING R/W LINE	
REQUIRED R/W LINE	
CONSTRUCTION LIMITS	C F
EASEMENT FOR CONSTR & MAINTENANCE OF SLOPES	
EASEMENT FOR CONSTR OF SLOPES	
EASEMENT FOR CONSTR OF DRIVES	

BEGIN LIMIT OF ACCESS	BLA
END LIMIT OF ACCESS	ELA
LIMIT OF ACCESS	
REQ'D R/W & LIMIT OF ACCESS	
ORANGE BARRIER FENCE	
ESA - ENV. SENSITIVE AREA (SEE ERIT 4-)	

NORTH FULTON
COMMUNITY IMPROVEMENT DISTRICT

GRESHAM SMITH AND PARTNERS

SCALE IN FEET
0 20 40 80

REVISION DATES

STATE OF GEORGIA
DEPARTMENT OF TRANSPORTATION

OFFICE: PROGRAM DELIVERY

CROSSROAD PLAN
CS 9284 / WINDWARD PARKWAY

PROJECT: PI#0010768
COUNTY: FULTON

DRAWING No. 14- 006

12/14/2012 GPLN

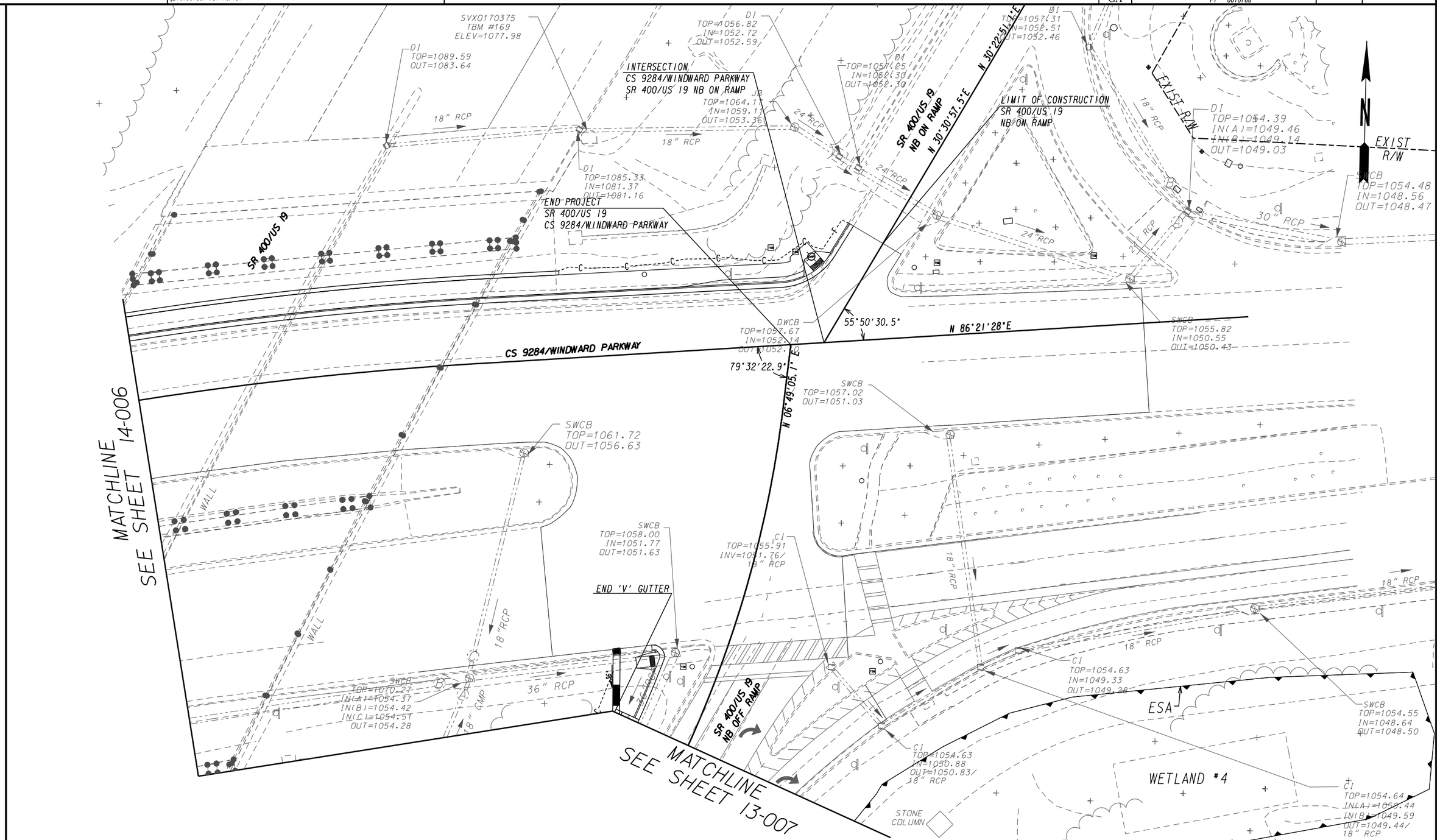

PROPERTY AND EXISTING R/W LINE	—P—
REQUIRED R/W LINE	
CONSTRUCTION LIMITS	—C— —F—
EASEMENT FOR CONSTR & MAINTENANCE OF SLOPES	
EASEMENT FOR CONSTR OF SLOPES	
EASEMENT FOR CONSTR OF DRIVES	

BEGIN LIMIT OF ACCESS	BLA
END LIMIT OF ACCESS	ELA
LIMIT OF ACCESS	
REQ'D R/W & LIMIT OF ACCESS	
ORANGE BARRIER FENCE	
ESA - ENV. SENSITIVE AREA (SEE ERIT 4-)	

NORTH FULTON
COMMUNITY IMPROVEMENT DISTRICT

GRESHAM SMITH AND PARTNERS

SCALE IN FEET
0 20 40 80

REVISION DATES

STATE OF GEORGIA
DEPARTMENT OF TRANSPORTATION

OFFICE: PROGRAM DELIVERY

CROSSROAD PLAN
CS 9284 / WINDWARD PARKWAY

PROJECT: PI#0010768
COUNTY: FULTON

DRAWING No. 14- 007

12/14/2012 GPLN

ATTACHMENT 2- TYPICAL SECTIONS

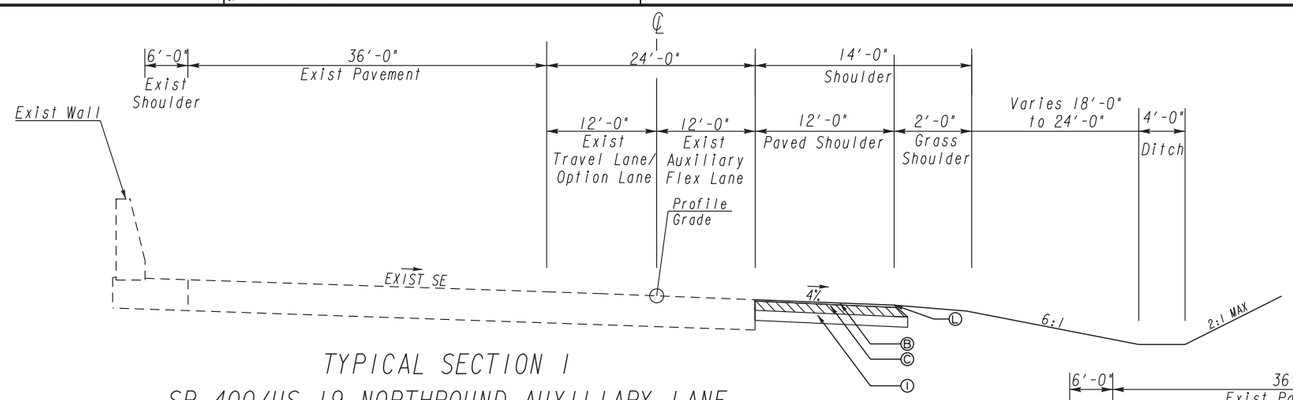

TYPICAL SECTION 1
SR 400/US 19 NORTHBOUND AUXILIARY LANE

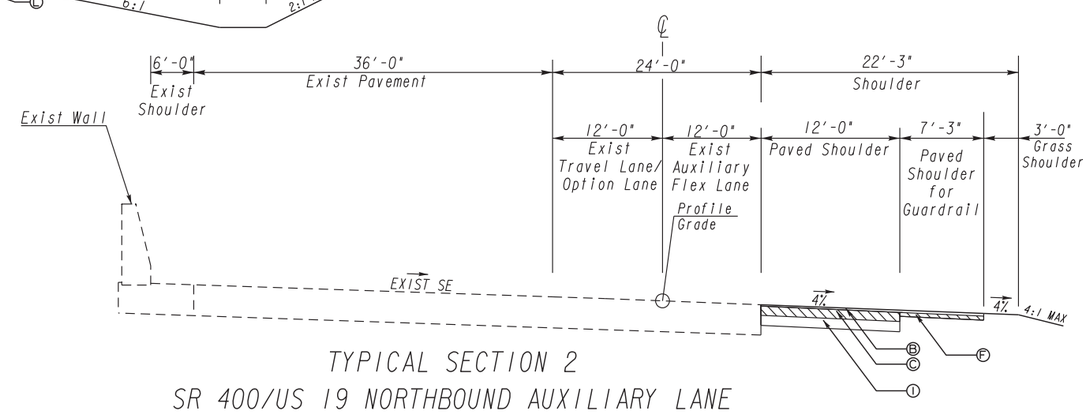

TYPICAL SECTION 2
SR 400/US 19 NORTHBOUND AUXILIARY LANE

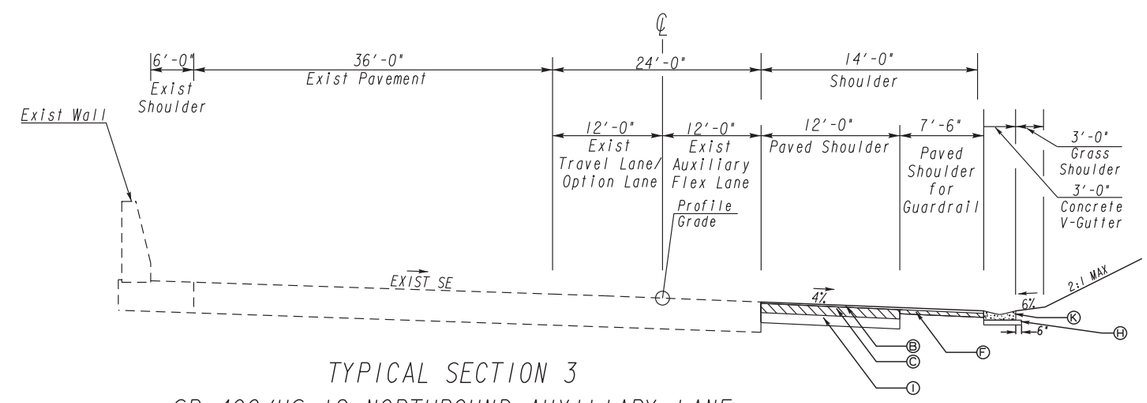

TYPICAL SECTION 3
SR 400/US 19 NORTHBOUND AUXILIARY LANE

REQUIRED PAVEMENT

- (A) PLAIN PORTLAND CEMENT CONCRETE PAVEMENT, CL 3 CONC, 11 IN THICK
- (B) RECYCLED ASPHALTIC CONCRETE 12.5 mm, SUPERPAVE, GP 2 ONLY, INCL. BITUM MAT'L & H. LIME (165 LB/SQ. YD.)
- (C) RECYCLED ASPHALTIC CONCRETE 19 mm, SUPERPAVE, GP 1 OR 2, INCL. BITUM MAT'L & H. LIME (660 LB/SQ. YD.)
- (D) RECYCLED ASPHALTIC CONCRETE 19 mm, SUPERPAVE, GP 1 OR 2, INCL. BITUM MAT'L & H. LIME (440 LB/SQ. YD.)
- (E) RECYCLED ASPHALTIC CONCRETE 19 mm, SUPERPAVE, GP 1 OR 2, INCL. BITUM MAT'L & H. LIME (330 LB/SQ. YD.)
- (F) RECYCLED ASPHALTIC CONCRETE 19 mm, SUPERPAVE, GP 1 OR 2, INCL. BITUM MAT'L & H. LIME (220 LB/SQ. YD.)
- (G) RECYCLED ASPHALTIC CONCRETE 25 mm, SUPERPAVE, GP 1 OR 2, INCL. BITUM MAT'L & H. LIME (660 LB/SQ. YD.)
- (H) GRADED AGGREGATE BASE, 4 IN
- (I) GRADED AGGREGATE BASE, 8 IN
- (J) GRADED AGGREGATE BASE, 12 IN
- (K) CONCRETE V GUTTER (SEE DETAIL D-33)
- (L) ASPHALT PAVEMENT EDGE TREATMENT, GEORGIA CONSTRUCTION DETAIL P-7
- (M) ASPHALTIC CONCRETE LEVELING, AS REQUIRED
- (N) MILLING, 1-1/2 IN
- (O) CONCRETE CURB & GUTTER - 8 IN X 30 IN, GA STD. 9032B, TYPE 7
- (P) CONCRETE CURB & GUTTER - 8 IN X 30 IN, GA STD. 9032B, TYPE 2
- (Q) RAISED CONCRETE MEDIAN, 7-1/2 IN
- (R) PAVEMENT REINFORCING FABRIC
- (S) 4" CONCRETE SIDEWALK
- (T) SOD

NORTH FULTON
COMMUNITY IMPROVEMENT DISTRICT

GRESHAM SMITH AND PARTNERS

NOT TO SCALE

REVISION DATES

STATE OF GEORGIA
DEPARTMENT OF TRANSPORTATION
OFFICE: PROGRAM DELIVERY

TYPICAL SECTIONS

PROJECT: PI#0010768
COUNTY: FULTON

DRAWING No. 05-001

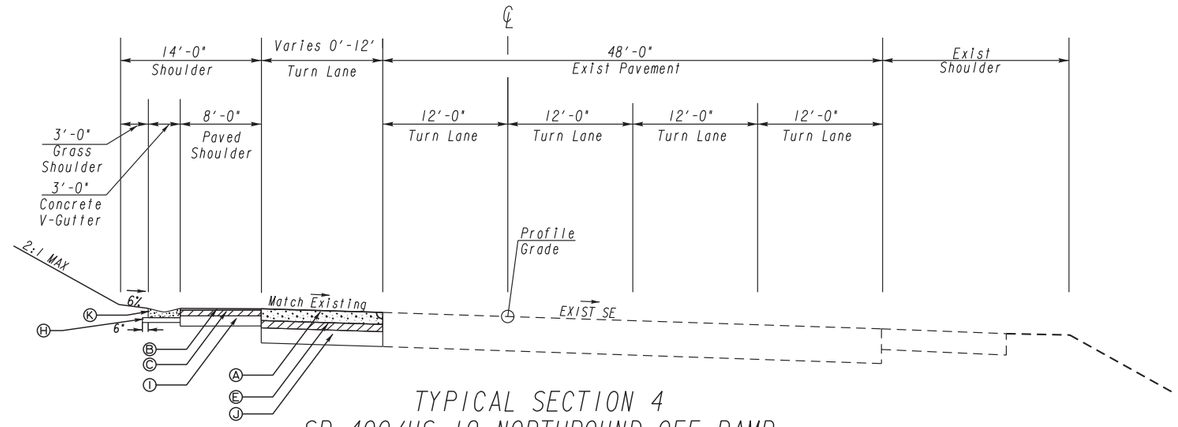

TYPICAL SECTION 4
SR 400/US 19 NORTHBOUND OFF RAMP
TO WINDWARD PARKWAY

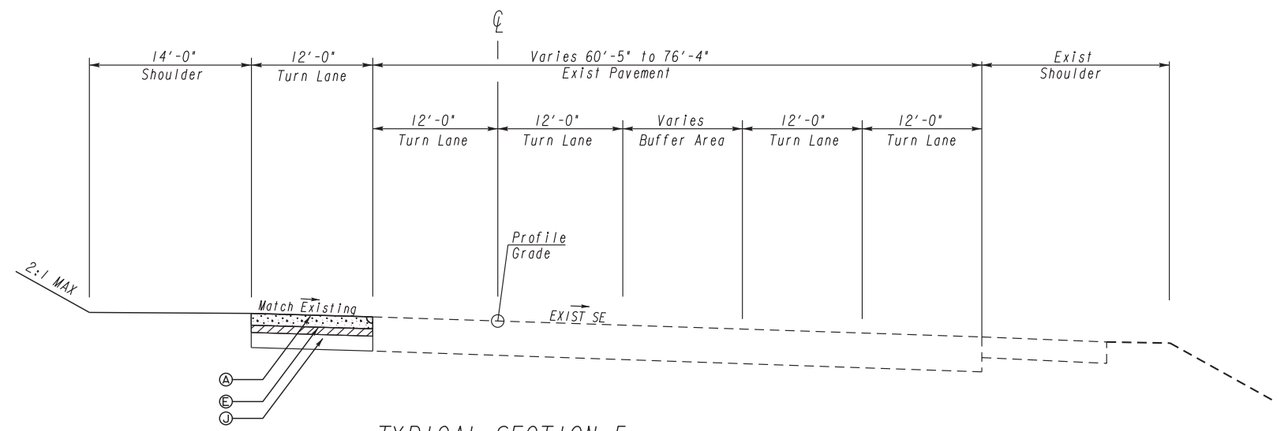

TYPICAL SECTION 5
SR 400/US 19 NORTHBOUND OFF RAMP
TO WINDWARD PARKWAY

REQUIRED PAVEMENT

- (A) PLAIN PORTLAND CEMENT CONCRETE PAVEMENT, CL 3 CONC, 11 IN THICK
- (B) RECYCLED ASPHALTIC CONCRETE 12.5 mm, SUPERPAVE, GP 2 ONLY, INCL. BITUM MAT'L & H. LIME (165 LB/SQ. YD.)
- (C) RECYCLED ASPHALTIC CONCRETE 19 mm, SUPERPAVE, GP 1 OR 2, INCL. BITUM MAT'L & H. LIME (660 LB/SQ. YD.)
- (D) RECYCLED ASPHALTIC CONCRETE 19 mm, SUPERPAVE, GP 1 OR 2, INCL. BITUM MAT'L & H. LIME (440 LB/SQ. YD.)
- (E) RECYCLED ASPHALTIC CONCRETE 19 mm, SUPERPAVE, GP 1 OR 2, INCL. BITUM MAT'L & H. LIME (330 LB/SQ. YD.)
- (F) RECYCLED ASPHALTIC CONCRETE 19 mm, SUPERPAVE, GP 1 OR 2, INCL. BITUM MAT'L & H. LIME (220 LB/SQ. YD.)
- (G) RECYCLED ASPHALTIC CONCRETE 25 mm, SUPERPAVE, GP 1 OR 2, INCL. BITUM MAT'L & H. LIME (660 LB/SQ. YD.)
- (H) GRADED AGGREGATE BASE, 4 IN
- (I) GRADED AGGREGATE BASE, 8 IN
- (J) GRADED AGGREGATE BASE, 12 IN
- (K) CONCRETE V GUTTER (SEE DETAIL D-33)
- (L) ASPHALT PAVEMENT EDGE TREATMENT, GEORGIA CONSTRUCTION DETAIL P-7
- (M) ASPHALTIC CONCRETE LEVELING, AS REQUIRED
- (N) MILLING, 1-1/2 IN
- (O) CONCRETE CURB & GUTTER - 8 IN X 30 IN, GA STD. 9032B, TYPE 7
- (P) CONCRETE CURB & GUTTER - 8 IN X 30 IN, GA STD. 9032B, TYPE 2
- (Q) RAISED CONCRETE MEDIAN, 7-1/2 IN
- (R) PAVEMENT REINFORCING FABRIC
- (S) 4" CONCRETE SIDEWALK
- (T) SOD

NORTH FULTON
COMMUNITY IMPROVEMENT DISTRICT

GRESHAM SMITH AND PARTNERS

NOT TO SCALE

REVISION DATES

STATE OF GEORGIA
DEPARTMENT OF TRANSPORTATION
OFFICE: PROGRAM DELIVERY

TYPICAL SECTIONS

PROJECT: PI#0010768
COUNTY: FULTON

DRAWING No. 05-002

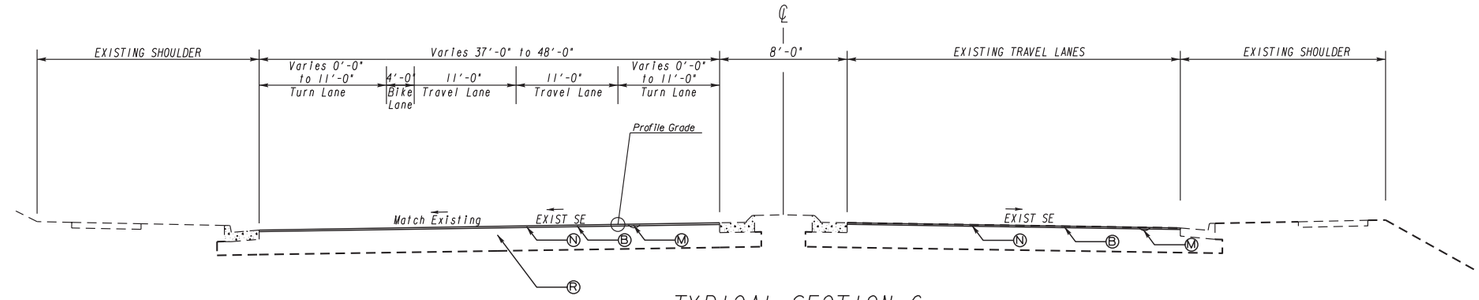

TYPICAL SECTION 6
WINDWARD PARKWAY

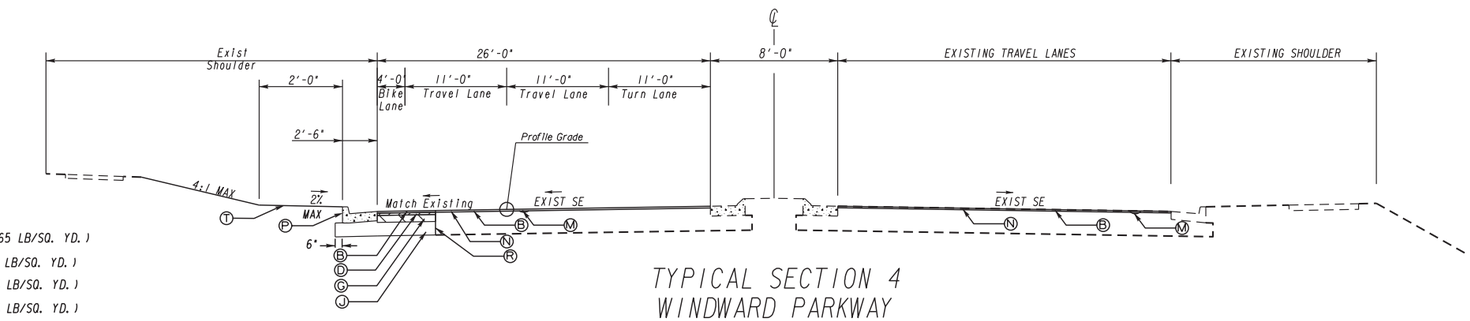

TYPICAL SECTION 4
WINDWARD PARKWAY

REQUIRED PAVEMENT

- (A) PLAIN PORTLAND CEMENT CONCRETE PAVEMENT, CL 3 CONC, 11 IN THICK
- (B) RECYCLED ASPHALTIC CONCRETE 12.5 mm, SUPERPAVE, GP 2 ONLY, INCL. BITUM MAT'L & H. LIME (165 LB/SQ. YD.)
- (C) RECYCLED ASPHALTIC CONCRETE 19 mm, SUPERPAVE, GP 1 OR 2, INCL. BITUM MAT'L & H. LIME (660 LB/SQ. YD.)
- (D) RECYCLED ASPHALTIC CONCRETE 19 mm, SUPERPAVE, GP 1 OR 2, INCL. BITUM MAT'L & H. LIME (440 LB/SQ. YD.)
- (E) RECYCLED ASPHALTIC CONCRETE 19 mm, SUPERPAVE, GP 1 OR 2, INCL. BITUM MAT'L & H. LIME (330 LB/SQ. YD.)
- (F) RECYCLED ASPHALTIC CONCRETE 19 mm, SUPERPAVE, GP 1 OR 2, INCL. BITUM MAT'L & H. LIME (220 LB/SQ. YD.)
- (G) RECYCLED ASPHALTIC CONCRETE 25 mm, SUPERPAVE, GP 1 OR 2, INCL. BITUM MAT'L & H. LIME (660 LB/SQ. YD.)
- (H) GRADED AGGREGATE BASE, 4 IN
- (I) GRADED AGGREGATE BASE, 8 IN
- (J) GRADED AGGREGATE BASE, 12 IN
- (K) CONCRETE V GUTTER (SEE DETAIL D-33)
- (L) ASPHALT PAVEMENT EDGE TREATMENT, GEORGIA CONSTRUCTION DETAIL P-7
- (M) ASPHALTIC CONCRETE LEVELING, AS REQUIRED
- (N) MILLING, 1-1/2 IN
- (O) CONCRETE CURB & GUTTER - 8 IN X 30 IN, GA STD. 9032B, TYPE 7
- (P) CONCRETE CURB & GUTTER - 8 IN X 30 IN, GA STD. 9032B, TYPE 2
- (Q) RAISED CONCRETE MEDIAN, 7-1/2 IN
- (R) PAVEMENT REINFORCING FABRIC
- (S) 4" CONCRETE SIDEWALK
- (T) SOD

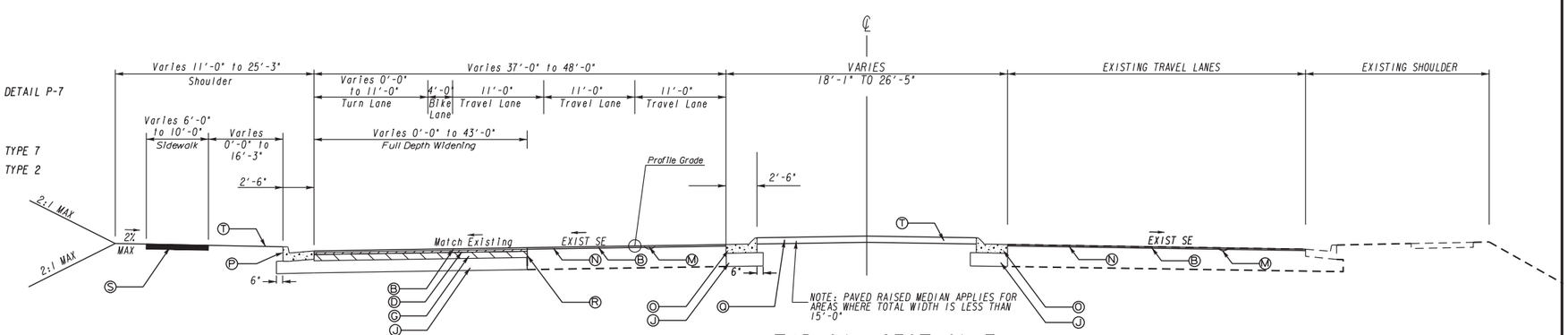

TYPICAL SECTION 7
WINDWARD PARKWAY

NORTH FULTON
COMMUNITY IMPROVEMENT DISTRICT

GRESHAM SMITH AND PARTNERS

NOT TO SCALE

REVISION DATES		

STATE OF GEORGIA
DEPARTMENT OF TRANSPORTATION

OFFICE: PROGRAM DELIVERY

TYPICAL SECTIONS

PROJECT: PI*0010768
COUNTY: FULTON

DRAWING No. 05-003

12/14/2012 GPLN

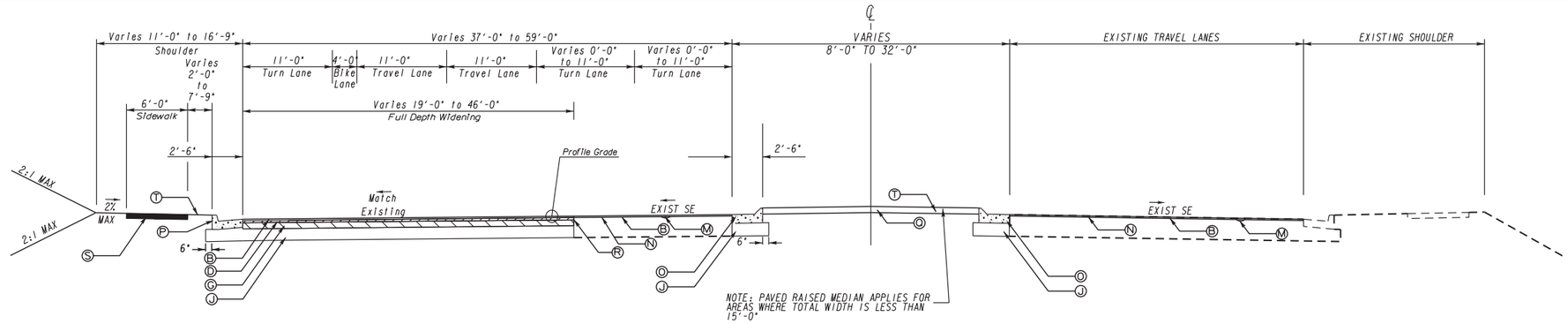

TYPICAL SECTION 8
WINDWARD PARKWAY

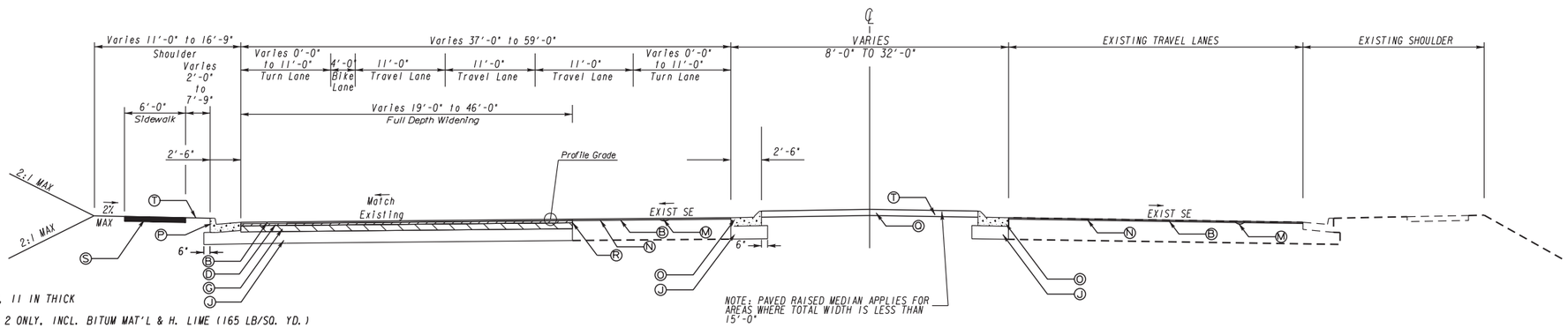

TYPICAL SECTION 9
WINDWARD PARKWAY

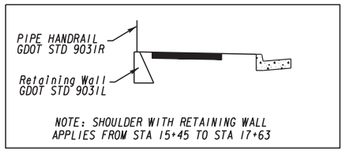

REQUIRED PAVEMENT

- (A) PLAIN PORTLAND CEMENT CONCRETE PAVEMENT, CL 3 CONC, 11 IN THICK
- (B) RECYCLED ASPHALTIC CONCRETE 12.5 mm, SUPERPAVE, GP 2 ONLY, INCL. BITUM MAT'L & H. LIME (165 LB/SQ. YD.)
- (C) RECYCLED ASPHALTIC CONCRETE 19 mm, SUPERPAVE, GP 1 OR 2, INCL. BITUM MAT'L & H. LIME (660 LB/SQ. YD.)
- (D) RECYCLED ASPHALTIC CONCRETE 19 mm, SUPERPAVE, GP 1 OR 2, INCL. BITUM MAT'L & H. LIME (440 LB/SQ. YD.)
- (E) RECYCLED ASPHALTIC CONCRETE 19 mm, SUPERPAVE, GP 1 OR 2, INCL. BITUM MAT'L & H. LIME (330 LB/SQ. YD.)
- (F) RECYCLED ASPHALTIC CONCRETE 19 mm, SUPERPAVE, GP 1 OR 2, INCL. BITUM MAT'L & H. LIME (220 LB/SQ. YD.)
- (G) RECYCLED ASPHALTIC CONCRETE 25 mm, SUPERPAVE, GP 1 OR 2, INCL. BITUM MAT'L & H. LIME (660 LB/SQ. YD.)
- (H) GRADED AGGREGATE BASE, 4 IN
- (I) GRADED AGGREGATE BASE, 8 IN
- (J) GRADED AGGREGATE BASE, 12 IN
- (K) CONCRETE V GUTTER (SEE DETAIL D-33)
- (L) ASPHALT PAVEMENT EDGE TREATMENT, GEORGIA CONSTRUCTION DETAIL P-7
- (M) ASPHALTIC CONCRETE LEVELING, AS REQUIRED
- (N) MILLING, 1-1/2 IN
- (O) CONCRETE CURB & GUTTER - 8 IN X 30 IN, GA STD. 9032B, TYPE 7
- (P) CONCRETE CURB & GUTTER - 8 IN X 30 IN, GA STD. 9032B, TYPE 2
- (Q) RAISED CONCRETE MEDIAN, 7-1/2 IN
- (R) PAVEMENT REINFORCING FABRIC
- (S) 4" CONCRETE SIDEWALK
- (T) SOD

NORTH FULTON
COMMUNITY IMPROVEMENT DISTRICT

GRESHAM SMITH AND PARTNERS

NOT TO SCALE

REVISION DATES

STATE OF GEORGIA
DEPARTMENT OF TRANSPORTATION
OFFICE: PROGRAM DELIVERY

TYPICAL SECTIONS

PROJECT: PI#0010768
COUNTY: FULTON

DRAWING No. 05-004

12/14/2012 GPLN

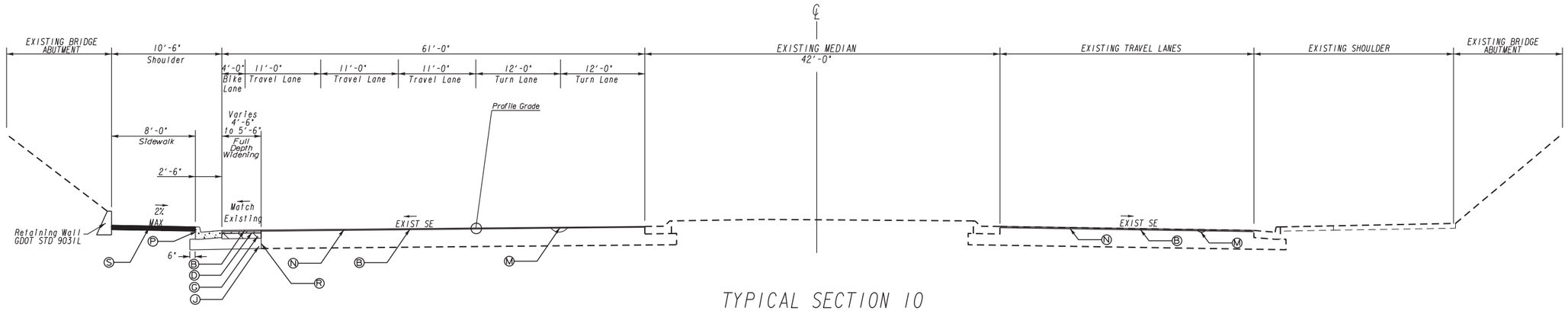

TYPICAL SECTION 10
WINDWARD PARKWAY UNDERNEATH SR 400/US 19

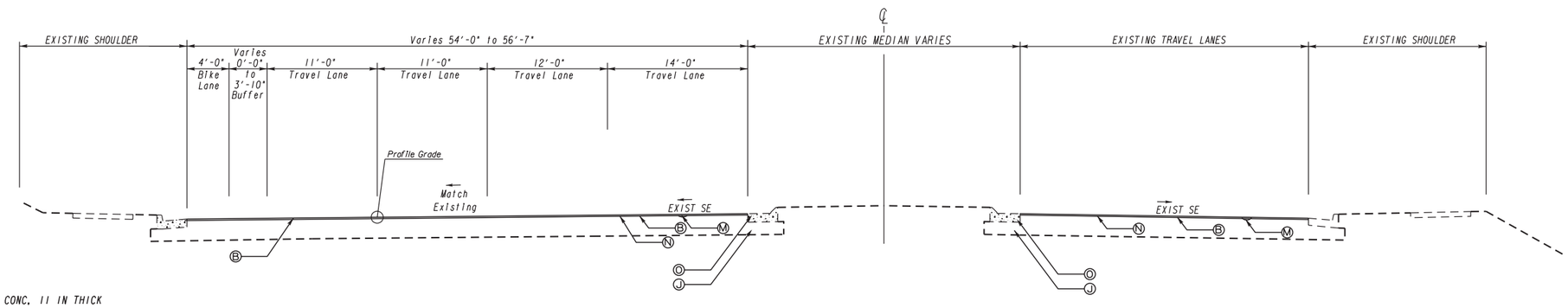

TYPICAL SECTION 11
WINDWARD PARKWAY

REQUIRED PAVEMENT

- (A) PLAIN PORTLAND CEMENT CONCRETE PAVEMENT, CL 3 CONC, 11 IN THICK
- (B) RECYCLED ASPHALTIC CONCRETE 12.5 mm, SUPERPAVE, GP 2 ONLY, INCL. BITUM MAT'L & H. LIME (165 LB/SQ. YD.)
- (C) RECYCLED ASPHALTIC CONCRETE 19 mm, SUPERPAVE, GP 1 OR 2, INCL. BITUM MAT'L & H. LIME (660 LB/SQ. YD.)
- (D) RECYCLED ASPHALTIC CONCRETE 19 mm, SUPERPAVE, GP 1 OR 2, INCL. BITUM MAT'L & H. LIME (440 LB/SQ. YD.)
- (E) RECYCLED ASPHALTIC CONCRETE 19 mm, SUPERPAVE, GP 1 OR 2, INCL. BITUM MAT'L & H. LIME (330 LB/SQ. YD.)
- (F) RECYCLED ASPHALTIC CONCRETE 19 mm, SUPERPAVE, GP 1 OR 2, INCL. BITUM MAT'L & H. LIME (220 LB/SQ. YD.)
- (G) RECYCLED ASPHALTIC CONCRETE 25 mm, SUPERPAVE, GP 1 OR 2, INCL. BITUM MAT'L & H. LIME (660 LB/SQ. YD.)
- (H) GRADED AGGREGATE BASE, 4 IN
- (I) GRADED AGGREGATE BASE, 8 IN
- (J) GRADED AGGREGATE BASE, 12 IN
- (K) CONCRETE V GUTTER (SEE DETAIL D-33)
- (L) ASPHALT PAVEMENT EDGE TREATMENT, GEORGIA CONSTRUCTION DETAIL P-7
- (M) ASPHALTIC CONCRETE LEVELING, AS REQUIRED
- (N) MILLING, 1-1/2 IN
- (O) CONCRETE CURB & GUTTER - 8 IN X 30 IN, GA STD. 9032B, TYPE 7
- (P) CONCRETE CURB & GUTTER - 8 IN X 30 IN, GA STD. 9032B, TYPE 2
- (Q) RAISED CONCRETE MEDIAN, 7-1/2 IN
- (R) PAVEMENT REINFORCING FABRIC
- (S) 4" CONCRETE SIDEWALK
- (T) SOD

NORTH FULTON
COMMUNITY IMPROVEMENT DISTRICT

GRESHAM SMITH AND PARTNERS

NOT TO SCALE

REVISION DATES

STATE OF GEORGIA
DEPARTMENT OF TRANSPORTATION
OFFICE: PROGRAM DELIVERY

TYPICAL SECTIONS

PROJECT: PI#0010768
COUNTY: FULTON

DRAWING No. 05-005

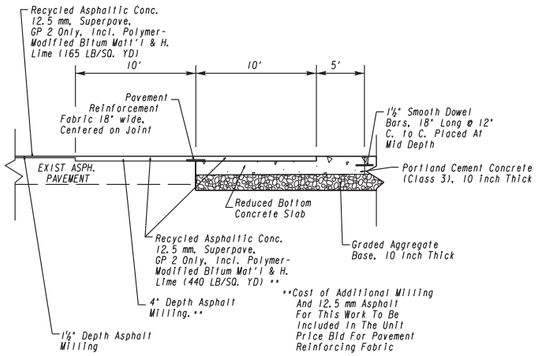

FULL DEPTH CONCRETE TO MILL & INLAY ASPHALT TRANSITION DETAIL

SEE PLAN FOR LOCATION

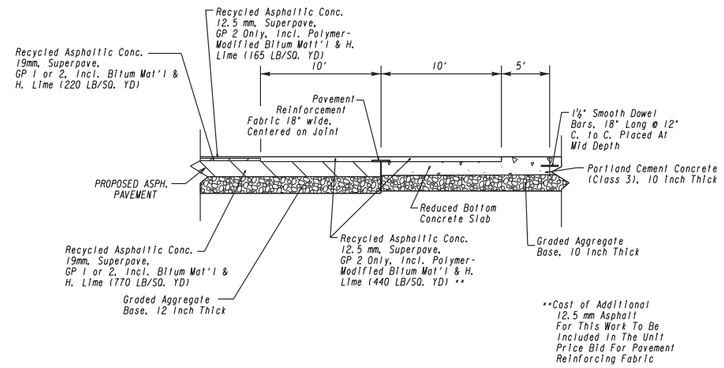

FULL DEPTH CONCRETE TO FULL DEPTH ASPHALT TRANSITION DETAIL

SEE PLAN FOR LOCATION

TYPICAL SECTION DETAIL TO BE USED WHEN EXISTING PAVEMENT IS TO BE RESURFACED WITH TWO INCHES OR MORE OF ASPHALTIC CONCRETE

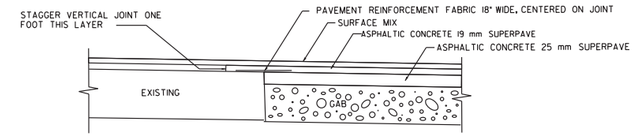

TYPICAL SECTION DETAIL TO BE USED WHEN EXISTING PAVEMENT IS TO BE RESURFACED WITH LESS THAN TWO INCHES OF ASPHALTIC CONCRETE

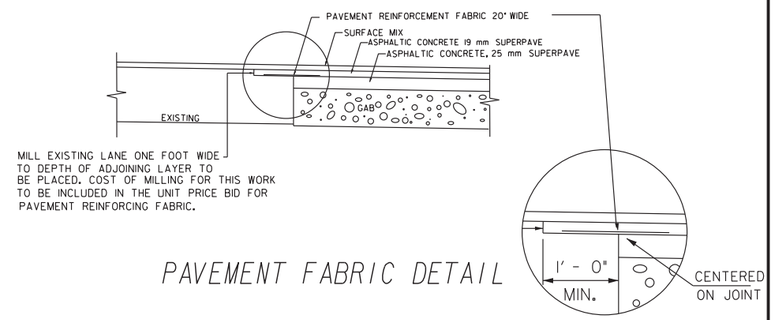

PAVEMENT FABRIC DETAIL

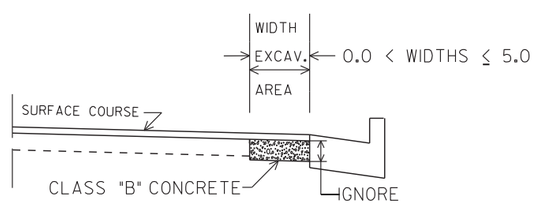

NO SCALE
CLASS "B" CONCRETE BASE OR PAVEMENT WIDENING
Item Code 500-9999 - Cu. Yds.

In excavated areas between the existing paving and new curb and gutter that are 5'-0" or less in width, Class "B" concrete shall be placed in lieu of the base and paving specified by the typical section. Payment will be made under "Class B Concrete Base and Pavement Widening".

In excavated areas greater than 5'-0" in width, the Contractor shall place base and paving as specified on the typical section.

See plans for details of curb and gutter construction.

CLASS "B" CONCRETE BASE OR WIDENING DETAIL

NORTH FULTON COMMUNITY IMPROVEMENT DISTRICT

GRESHAM SMITH AND PARTNERS

NOT TO SCALE

REVISION DATES

STATE OF GEORGIA
DEPARTMENT OF TRANSPORTATION
OFFICE: PROGRAM DELIVERY

TYPICAL SECTIONS

PROJECT: PI#0010768
COUNTY: FULTON

DRAWING No. 05-006

ATTACHMENT 3- DETAILED COST ESTIMATES

DEPARTMENT OF TRANSPORTATION
STATE OF GEORGIA

INTERDEPARTMENT CORRESPONDENCE

FILE P.I. No. **#0010768**

OFFICE Program Delivery

PROJECT DESCRIPTION

SR 400/US 19 at Windward Parkway

DATE March 30, 2015

From: Albert V. Shelby III, State Program Delivery Engineer

To: Lisa L. Myers, State Project Review Engineer

Subject: REVISIONS TO PROGRAMMED COSTS

PROJECT MANAGER Cynthia Burney

MGMT LET DATE 2/13/2018

MGMT ROW DATE 10/13/2016

PROGRAMMED COSTS (TPro W/OUT INFLATION)			**LAST ESTIMATE UPDATE**	
CONSTRUCTION	$	3,848,160.07	DATE	10/1/2014
RIGHT OF WAY	$	810,000.00	DATE	10/1/2014
UTILITIES	$		DATE	

REVISED COST ESTIMATES

CONSTRUCTION*	$	3,763,503.45
RIGHT OF WAY	$	858,000.00
UTILITIES	$	234,564.00

*Cost Contains **15** % Contingency

REASONS FOR COST INCREASE AND CONTINGENCY JUSTIFICATION:

CONTINGENCY SUMMARY

A.	CONSTRUCTION COST ESTIMATE:	$ 3,023,067.00	Base Estimate From CES		
B.	ENGINEERING AND INSPECTION (E & I):	$ 151,153.35	Base Estimate (A) x	5	%
C.	CONTINGENCY:	$ 476,133.05	Base Estimate (A) + E & I (B) x See % Table in "Risk Based Cost Estimation" Memo	15	%
D.	TOTAL LIQUID AC ADJUSTMENT:	$ 113,150.05	Total From Liquid AC Spreadsheet		
E.	CONSTRUCTION TOTAL:	$ 3,763,503.45	(A + B + C + D = E)		

REIMBURSABLE UTILTY COSTS

UTILITY OWNER	REIMBURSABLE COST
TOTAL	$ -

ATTACHMENTS:

CES Cost Estimate
Liquid AC Adjustment Spreadsheet
Right Of Way Cost Estimate
Utility Cost Estimate

PROJ. NO.	#0010768	CALL NO.
P.I. NO.	#0010768	
DATE	7/10/2015	

INDEX (TYPE)	**DATE**	**INDEX**
REG. UNLEADED	Jul-15	$ 2.662
DIESEL		$ 2.826
LIQUID AC		$ 466.00

Link to Fuel and AC Index:
http://www.dot.ga.gov/doingbusiness/Materials/Pages/asphaltcementindex.aspx

LIQUID AC ADJUSTMENTS

PA=[((APM-APL)/APL)]xTMTxAPL

Asphalt

Price Adjustment (PA)			**110442**	**$**	**110,442.00**
Monthly Asphalt Cement Price month placed (APM)	Max. Cap	60%	$ 745.60		
Monthly Asphalt Cement Price month project let (APL)			$ 466.00		
Total Monthly Tonnage of asphalt cement (TMT)			395		

ASPHALT	**Tons**	**%AC**	**AC ton**
Leveling	500	5.0%	25
12.5 mm SP	3300	5.0%	165
19 mm SP	2300	5.0%	115
25 mm SP	1800	5.0%	90
	7900		**395**

BITUMINOUS TACK COAT

Price Adjustment (PA)			**$ 2,708.05**	**$**	**2,708.05**
Monthly Asphalt Cement Price month placed (APM)	Max. Cap	60%	$ 745.60		
Monthly Asphalt Cement Price month project let (APL)			$ 466.00		
Total Monthly Tonnage of asphalt cement (TMT)			9.685452579		

Bitum Tack Gals	gals/ton	tons
2255	232.8234	9.68545258

BITUMINOUS TACK COAT (surface treatment)

Price Adjustment (PA)			**0**	**$**	**-**
Monthly Asphalt Cement Price month placed (APM)	Max. Cap	60%	$ 745.60		
Monthly Asphalt Cement Price month project let (APL)			$ 466.00		
Total Monthly Tonnage of asphalt cement (TMT)			0		

Bitum Tack	SY	Gals/SY	Gals	gals/ton	tons
Single Surf. Trmt.		0.20	0	232.8234	0
Double Surf.Trmt.		0.44	0	232.8234	0
Triple Surf. Trmt		0.71	0	232.8234	0
					0

TOTAL LIQUID AC ADJUSTMENT	**$**	**113,150.05**

Job Estimate Report
Description: SR 400 at CR 9284/Windward Parkway
PI Number: 0010768 SPEC YEAR: 13
March 17, 2015

LINE	ITEM	ALT	UNITS	DESCRIPTION	QUANTITY	PRICE	AMOUNT
5	150-1000		LS	TRAFFIC CONTROL - TRAFFIC CONTROL LUMP SUM	1	$250,000.00	$250,000.00
10	210-0100		LS	GRADING COMPLETE - GRADING LUMP SUM	1	$350,000.00	$350,000.00
15	310-1101		TN	GR AGGR BASE CRS, INCL MATL	7050	$22.44	$158,202.00
20	402-1812		TN	RECYCLED ASPH CONC LEVELING, INCL BITUM MATL & H LIME	500	$73.73	$36,865.00
25	402-3130		TN	RECYCLED ASPH CONC 12.5 MM SUPERPAVE, GP 2 ONLY, INCL BITUM MATL & H LIME	3300	$87.57	$288,981.00
30	402-3190		TN	RECYCLED ASPH CONC 19 MM SUPERPAVE, GP 1 OR 2,INCL BITUM MATL & H LIME	2300	$79.84	$183,632.00
35	402-3121		TN	RECYCLED ASPH CONC 25 MM SUPERPAVE, GP 1 OR 2, INCL BITUM MATL & H LIME	1800	$83.48	$150,264.00
40	413-1000		GL	BITUM TACK COAT	2255	$4.80	$10,824.00
45	432-0206		SY	MILL ASPH CONC PVMT, 1 1/2 IN DEPTH	30000	$1.29	$38,700.00
50	436-1100		LF	ASPH CONC CURB- 5 IN	1500	$7.87	$11,805.00
55	439-0024		SY	PLAIN PC CONC PVMT, CL 3 CONC, 11 INCH THK	1300	$64.41	$83,733.00
60	441-0104		SY	CONC SIDEWALK, 4 IN	1600	$26.43	$42,288.00
65	441-0108		SY	CONC SIDEWALK, 8 IN	140	$60.49	$8,468.60
70	441-0204		SY	PLAIN CONC DITCH PAVING, 4 IN	600	$29.94	$17,964.00
75	441-0740		SY	CONCRETE MEDIAN, 4 IN	400	$25.74	$10,296.00
80	441-0754		SY	CONCRETE MEDIAN, 7 1/2 IN	200	$50.72	$10,144.00
85	441-3999		LF	CONCRETE V GUTTER	1560	$15.41	$24,039.60
90	441-5008		LF	CONCRETE HEADER CURB, 6 IN, TP 7	500	$14.09	$7,045.00
95	441-6216		LF	CONC CURB & GUTTER, 8 IN X 24 IN, TP 2	100	$13.59	$1,359.00
100	441-6222		LF	CONC CURB & GUTTER, 8 IN X 30 IN, TP 2	3350	$13.42	$44,957.00
105	441-6740		LF	CONC CURB & GUTTER, 8 IN X 30 IN, TP 7	2420	$12.68	$30,685.60
110	446-1100		LF	PVMT REF FAB STRIPS, TP2,18 INCH WIDTH	6000	$4.50	$27,000.00
115	500-9999		CY	CLASS B CONC, BASE OR PVMT WIDENING	40	$185.13	$7,405.20
120	641-1200		LF	GUARDRAIL, TP W	1300	$16.15	$20,995.00
125	641-5001		EA	GUARDRAIL ANCHORAGE, TP 1	3	$767.42	$2,302.26
130	641-5012		EA	GUARDRAIL ANCHORAGE, TP 12	3	$1,935.41	$5,806.23
135	500-3201		CY	CLASS B CONCRETE, RETAINING WALL	40	$555.72	$22,228.80
140	515-2020		LF	GALV STEEL PIPE HANDRAIL, 2 IN, ROUND	250	$44.65	$11,162.50
145	550-1180		LF	STORM DRAIN PIPE, 18 IN, H 1-10	4100	$33.72	$138,252.00
150	550-1240		LF	STORM DRAIN PIPE, 24 IN, H 1-10	300	$44.87	$13,461.00
155	550-1360		LF	STORM DRAIN PIPE, 36 IN, H 1-10	100	$58.35	$5,835.00
160	550-1420		LF	STORM DRAIN PIPE, 42 IN, H 1-10	20	$104.60	$2,092.00
165	668-1100		EA	CATCH BASIN, GP 1	15	$2,206.06	$33,090.90
170	668-2100		EA	DROP INLET, GP 1	14	$1,809.44	$25,332.16
175	668-4300		EA	STORM SEWER MANHOLE, TP 1	8	$1,893.18	$15,145.44
180	163-XXXX		LS	TEMPORARY EROSION CONTROL LUMP SUM	1	$145,000.00	$145,000.00
185	163-XXXX		LS	PERMANENT EROSION CONTROL LUMP SUM	1	$50,000.00	$50,000.00
190	700-9300		SY	SOD	2000	$5.13	$10,260.00
195	636-XXXX		LS	SIGNING AND MARKING LUMP SUM	1	$295,000.00	$295,000.00
200	638-1001		LS	STR SUPPORT FOR OVERHEAD SIGN, TP I , STA - 116+25	1	$110,000.00	$110,000.00
205	647-1000		LS	TRAF SIGNAL INSTALLATION NO 1	1	$70,000.00	$70,000.00
210	647-1000		LS	TRAF SIGNAL INSTALLATION NO 2	1	$40,000.00	$40,000.00
215	647-1000		LS	TRAF SIGNAL INSTALLATION NO 3	1	$30,000.00	$30,000.00
220	936-1000		EA	CCTV SYSTEM	1	$65,000.00	$65,000.00
225	999-XXXX		EA	REMOVE/RESET LIGHTING STANDARD	11	$5,000.00	$55,000.00
235	999-XXXX		LS	POST CONTSTRUCTION STORMWATER BMPS	1	$62,446.00	$62,446.00
ITEM TOTAL							$3,023,067.00
INFLATED ITEM TOTAL							$3,023,067.00
TOTALS FOR JOB 0010768							
ESTIMATED COST:							$3,023,067.00
ESTIMATED TOTAL:							$3,023,067.00

GEORGIA DEPARTMENT OF TRANSPORTATION
PRELIMINARY ROW COST ESTIMATE SUMMARY

Date: 3/26/2015 Project: 10768
Revised: County: Fulton
PI: 10768
Description: CS 9284/Windward Pkwy at SR 400/US 19
Project Termini: CS 9284/Windward Pkwy at SR 400/US 19

Existing ROW: Varies
Parcels: 8 Required ROW: Varies

Land and Improvements		$640,500.00
Proximity Damage	*$0.00*	
Consequential Damage	*$0.00*	
Cost to Cures	*$85,000.00*	
Trade Fixtures	*$0.00*	
Improvements	*$17,000.00*	
Valuation Services		$50,000.00
Legal Services		$80,400.00
Relocation		$16,000.00
Demolition		$0.00
Administrative		$71,000.00
TOTAL ESTIMATED COSTS		$857,900.00
TOTAL ESTIMATED COSTS (ROUNDED)		***$858,000.00***

Preparation Credits	Hours	Signature

Prepared By: Dashone Alexander CG#: 286999 03/26/2015 (DATE)
Approved By: Dashone Alexander CG#: 286999 03/26/2015 (DATE)

NOTE: No Market Appreciation is included in this Preliminary Cost Estimate

allsop

DEPARTMENT OF TRANSPORTATION
STATE OF GEORGIA

INTER-DEPARTMENT CORRESPONDENCE

FROM: Patrick Allen, P.E. District Utilities Engineer **DATE:** March 26, 2015

TO: Cynthia Burney, P.E., Project Manager

SUBJECT: PRELIMINARY UTILITY COST ESTIMATE – P.I. No. 0010768 – SR 400 @ Windward Parkway – Fulton County

As requested by your office, we are furnishing you with a Preliminary Cost Estimate for each utility with facilities potentially located with the project limits.

FACILITY OWNER	REIMBURSABLE	NON-REIMBURSABLE	TOTAL
Georgia Power Company (Dist.)	$0.00	$0.00	$0.00
Georgia Power Company (Trans.)	$0.00	$0.00	$0.00
Fulton Co. Public Works (Water)	$0.00	$42,500.00	$42,500.00
Fulton Co. Public Works (Sewer)	$0.00	$24,500.00	$24,500.00
XO Communications	$0.00	$22,300.00	$22,300.00
AT&T	$0.00	$30,000.00	$30,000.00
Comcast of Georgia	$0.00	$17,304.00	$17,304.00
Zayo Fiber Solutions	$0.00	$32,960.00	$32,960.00
Atlanta Gas Light	$0.00	$65,000.00	$65,000.00
TOTAL	**$0.00**	$234,564.00	$234,564.00

This estimate is based upon the current information. We will provide an updated estimate when the plans are further developed.

If you have any questions, please contact Clyde Cunningham at 770-986-1117

RSB/PA/SW/CAC

Cc: Michael J. Bolden, State Utilities Engineer

ATTACHMENT 4- TRAFFIC DIAGRAMS

Department of Transportation
State of Georgia

INTERDEPARTMENT CORRESPONDENCE

FILE Fulton County
P.I. # 0010768

OFFICE Planning

DATE December 4, 2014

FROM Cynthia L. VanDyke, State Transportation Planning Administrator

TO Albert Shelby, Program Delivery Engineer
Attention: Cynthia Burney

SUBJECT Reviewed **Design Traffic** for SR 400 @ CR 9284/WINDWARD PKWY.

We have reviewed the consultant's Design Traffic for the above project. The Design Traffic is approved.

If you have any questions concerning this information, please contact Rhonda Niles at (404) 631-1924.

CLV/rfn

SHEET 1 OF 13

P.I. NO: 0010768

N

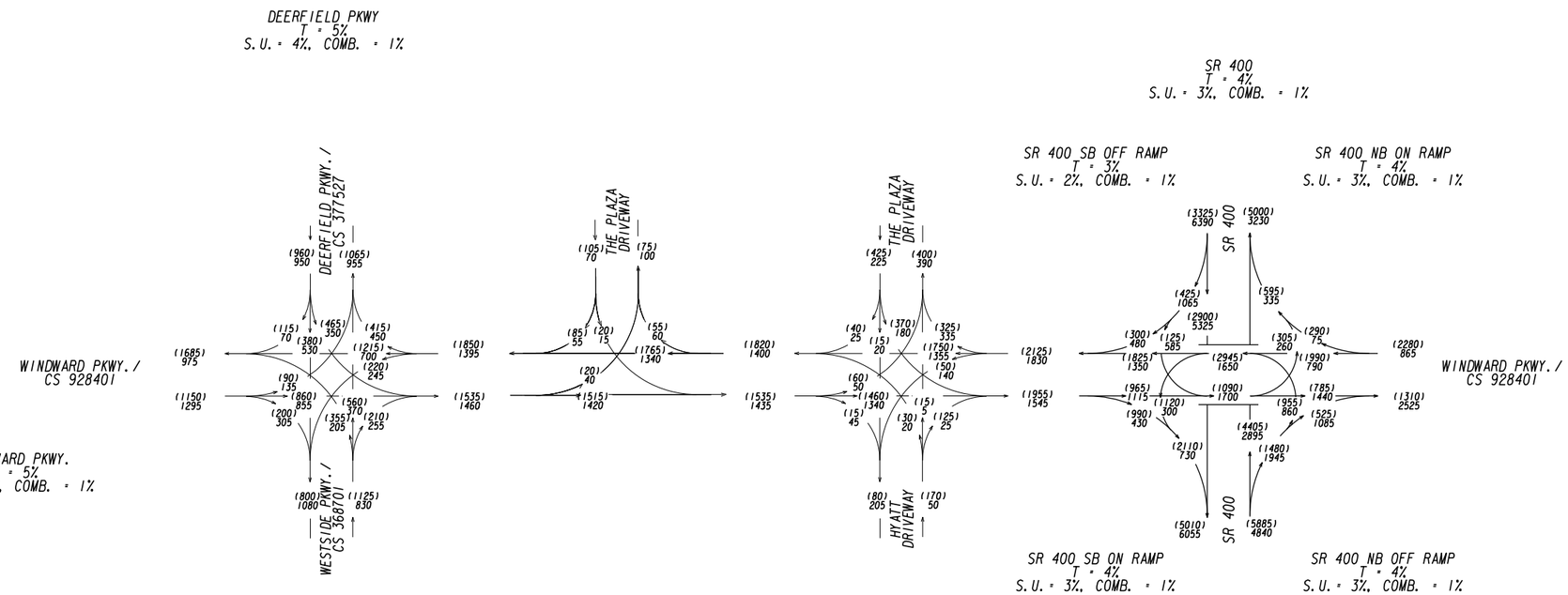

2014 PM DHV = (000)
2014 AM DHV = 000

GRESHAM SMITH AND PARTNERS

GEORGIA
DEPARTMENT OF TRANSPORTATION

REVISION DATES

STATE OF GEORGIA
DEPARTMENT OF TRANSPORTATION
OFFICE: PROGRAM DELIVERY

TRAFFIC DIAGRAM
WINDWARD PARKWAY FROM DEERFIELD PARKWAY TO SR 400

FULTON COUNTY

DRAWING No. 10-001

4/27/2012 GPLN

SHEET 2 OF 13

P.I. NO: 0010768

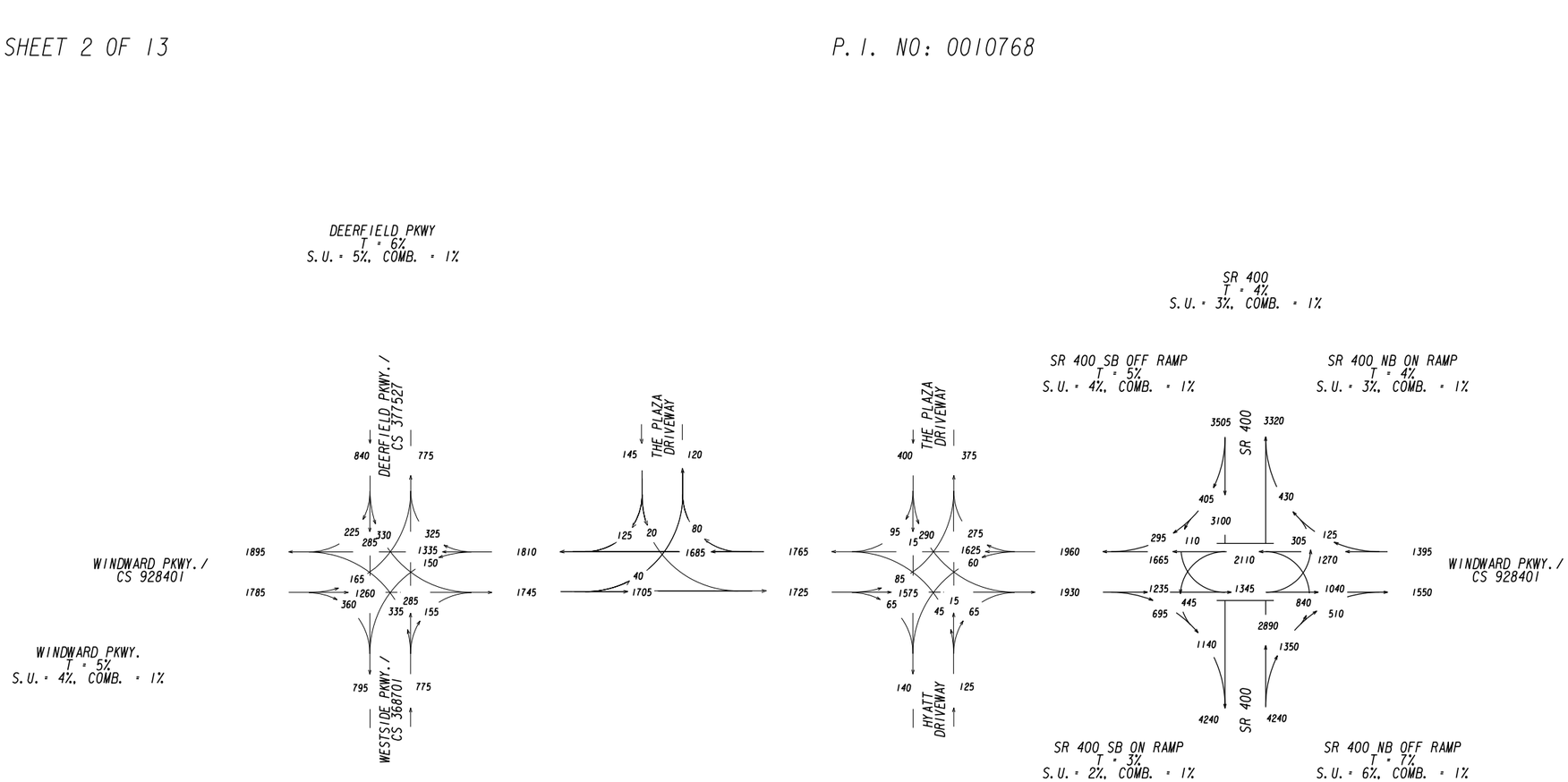

2014 MD DHV = 000

GRESHAM SMITH AND PARTNERS

GEORGIA
DEPARTMENT OF TRANSPORTATION

REVISION DATES

STATE OF GEORGIA
DEPARTMENT OF TRANSPORTATION

OFFICE: PROGRAM DELIVERY

TRAFFIC DIAGRAM
WINDWARD PARKWAY FROM DEERFIELD PARKWAY TO SR 400

FULTON COUNTY

DRAWING No. 10-002

4/27/2012 GPLN

SHEET 3 OF 13

P.I. NO: 0010768

N

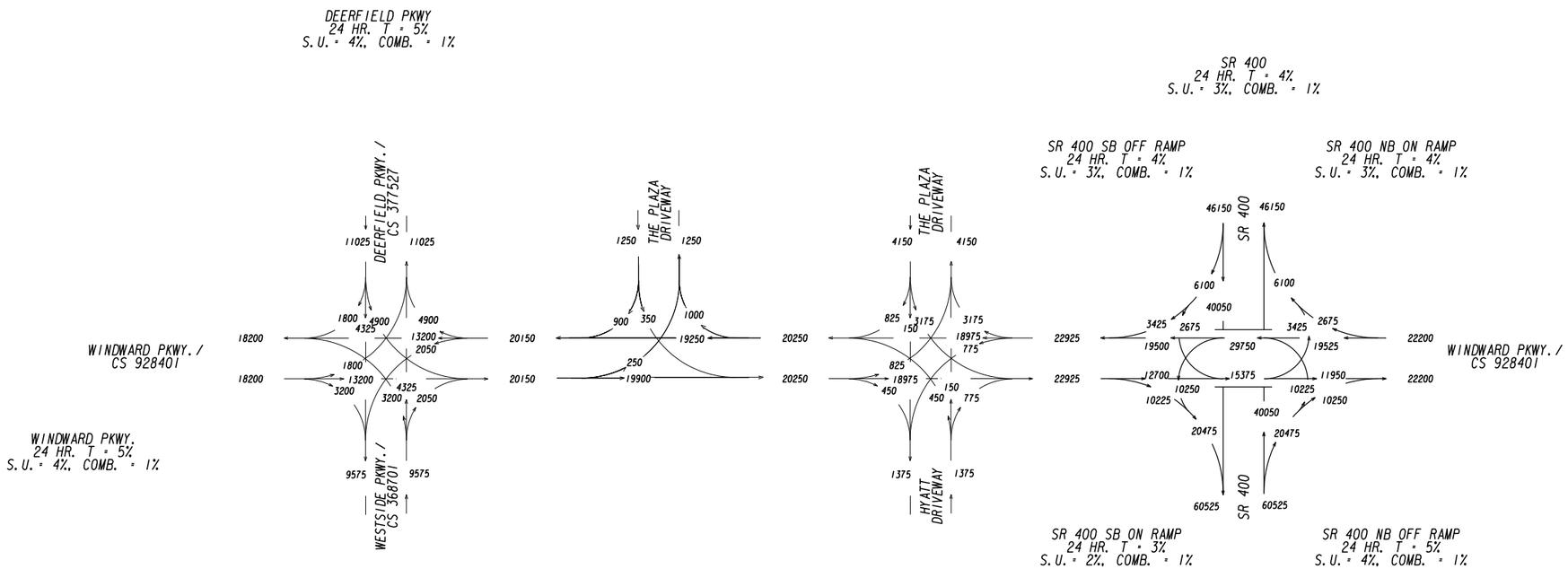

2014 AADT = 000

GRESHAM SMITH AND PARTNERS

GEORGIA
DEPARTMENT OF TRANSPORTATION

REVISION DATES

STATE OF GEORGIA
DEPARTMENT OF TRANSPORTATION

OFFICE: PROGRAM DELIVERY

TRAFFIC DIAGRAM
WINDWARD PARKWAY FROM DEERFIELD PARKWAY TO SR 400

FULTON COUNTY

DRAWING No. 10-003

4/27/2012 GPLN

SHEET 4 OF 13

P.I. NO: 0010768

N

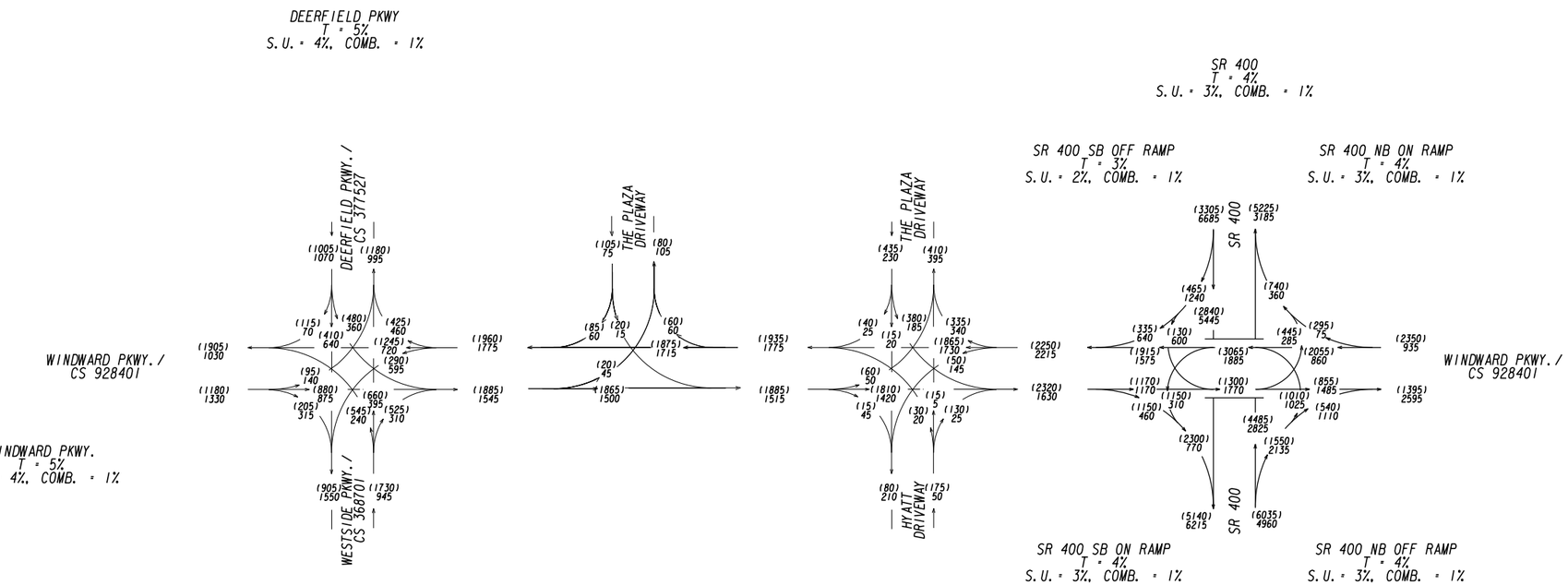

2019 NO BUILD PM DHV = (000)
2019 NO BUILD AM DHV = 000

GRESHAM SMITH AND PARTNERS

GEORGIA
DEPARTMENT OF TRANSPORTATION

REVISION DATES

STATE OF GEORGIA
DEPARTMENT OF TRANSPORTATION
OFFICE: PROGRAM DELIVERY

TRAFFIC DIAGRAM
WINDWARD PARKWAY FROM DEERFIELD PARKWAY TO SR 400

FULTON COUNTY

DRAWING No. 10-004

4/27/2012 GPLN

SHEET 5 OF 13

P.I. NO: 0010768

N

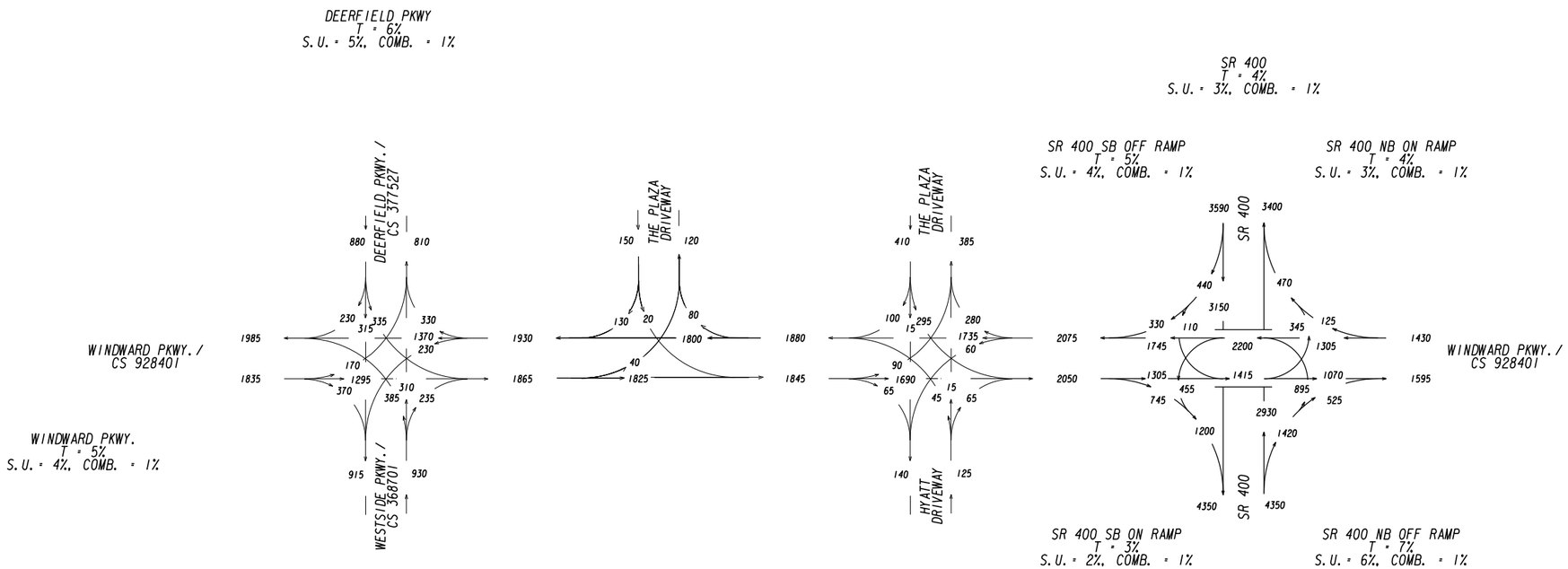

2019 NO BUILD MD DHV = 000

GRESHAM SMITH AND PARTNERS

GEORGIA
DEPARTMENT OF TRANSPORTATION

REVISION DATES

STATE OF GEORGIA
DEPARTMENT OF TRANSPORTATION

OFFICE: PROGRAM DELIVERY

TRAFFIC DIAGRAM
WINDWARD PARKWAY FROM DEERFIELD PARKWAY TO SR 400

FULTON COUNTY

DRAWING No. 10-005

4/27/2012 GPLN

SHEET 6 OF 13

P.I. NO: 0010768

N

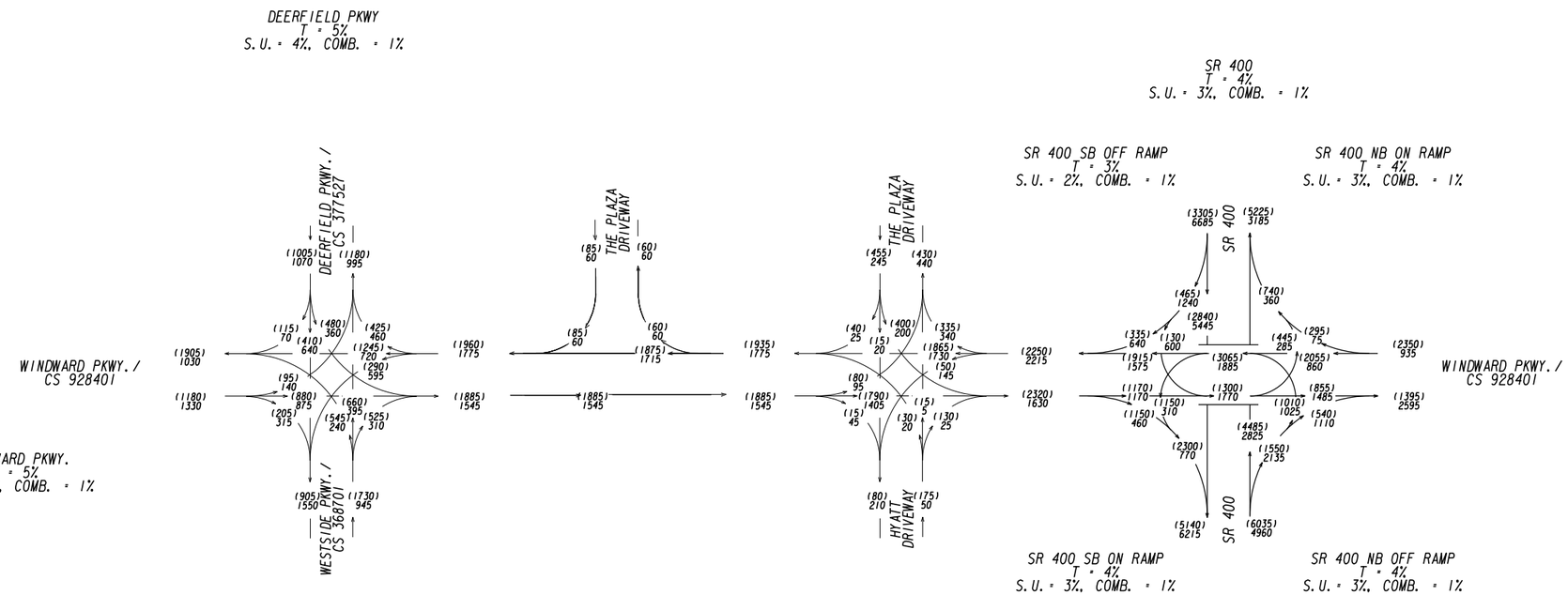

2019 BUILD PM DHV = (000)
2019 BUILD AM DHV = 000

GRESHAM SMITH AND PARTNERS

GEORGIA
DEPARTMENT OF TRANSPORTATION

REVISION DATES

STATE OF GEORGIA
DEPARTMENT OF TRANSPORTATION
OFFICE: PROGRAM DELIVERY

TRAFFIC DIAGRAM
WINDWARD PARKWAY FROM DEERFIELD PARKWAY TO SR 400

FULTON COUNTY

DRAWING No. 10-006

4/27/2012 GPLN

SHEET 7 OF 13

P.I. NO: 0010768

N

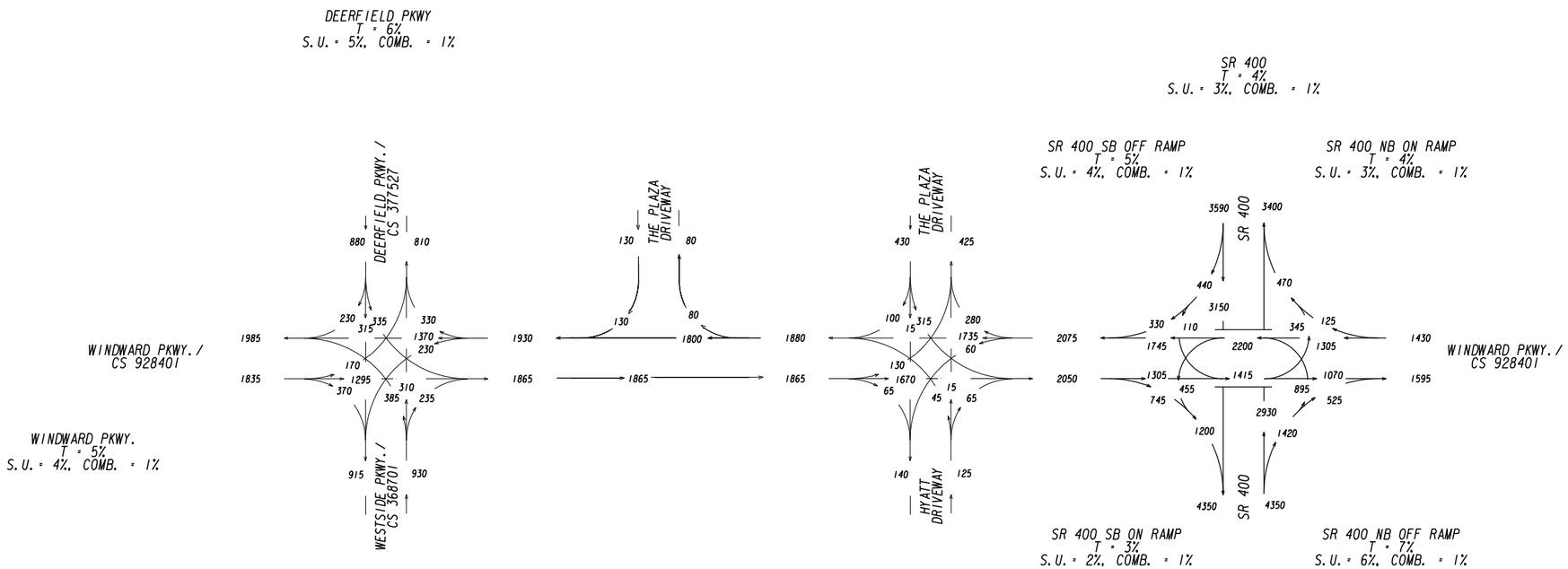

2019 BUILD MD DHV = 000

GRESHAM SMITH AND PARTNERS

GEORGIA
DEPARTMENT OF TRANSPORTATION

REVISION DATES

STATE OF GEORGIA
DEPARTMENT OF TRANSPORTATION

OFFICE: PROGRAM DELIVERY

TRAFFIC DIAGRAM
WINDWARD PARKWAY FROM DEERFIELD PARKWAY TO SR 400

FULTON COUNTY

DRAWING No. 10-007

4/27/2012 GPLN

SHEET 8 OF 13

P.I. NO: 0010768

N

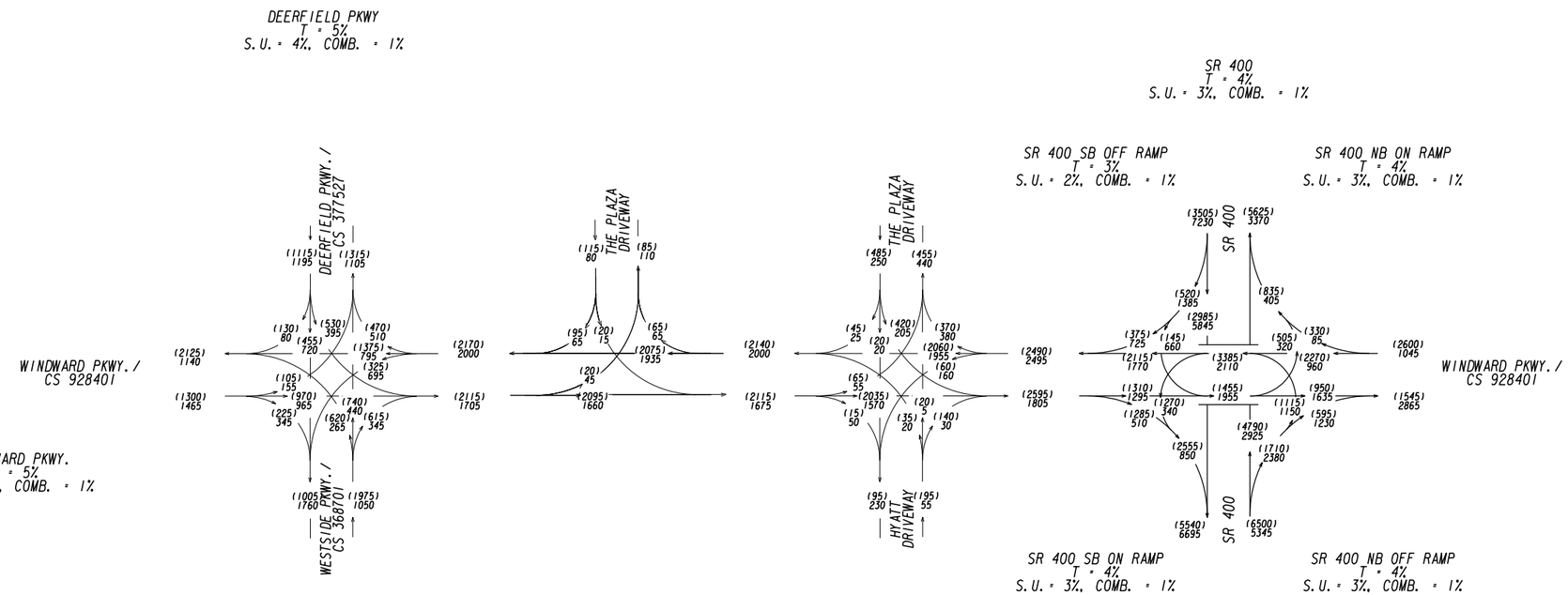

2039 NO BUILD PM DHV = (000)
2039 NO BUILD AM DHV = 000

GRESHAM SMITH AND PARTNERS

GEORGIA
DEPARTMENT OF TRANSPORTATION

REVISION DATES

STATE OF GEORGIA
DEPARTMENT OF TRANSPORTATION
OFFICE: PROGRAM DELIVERY

TRAFFIC DIAGRAM
WINDWARD PARKWAY FROM DEERFIELD PARKWAY TO SR 400

FULTON COUNTY

DRAWING No. 10-008

4/27/2012 GPLN

SHEET 9 OF 13

P.I. NO: 0010768

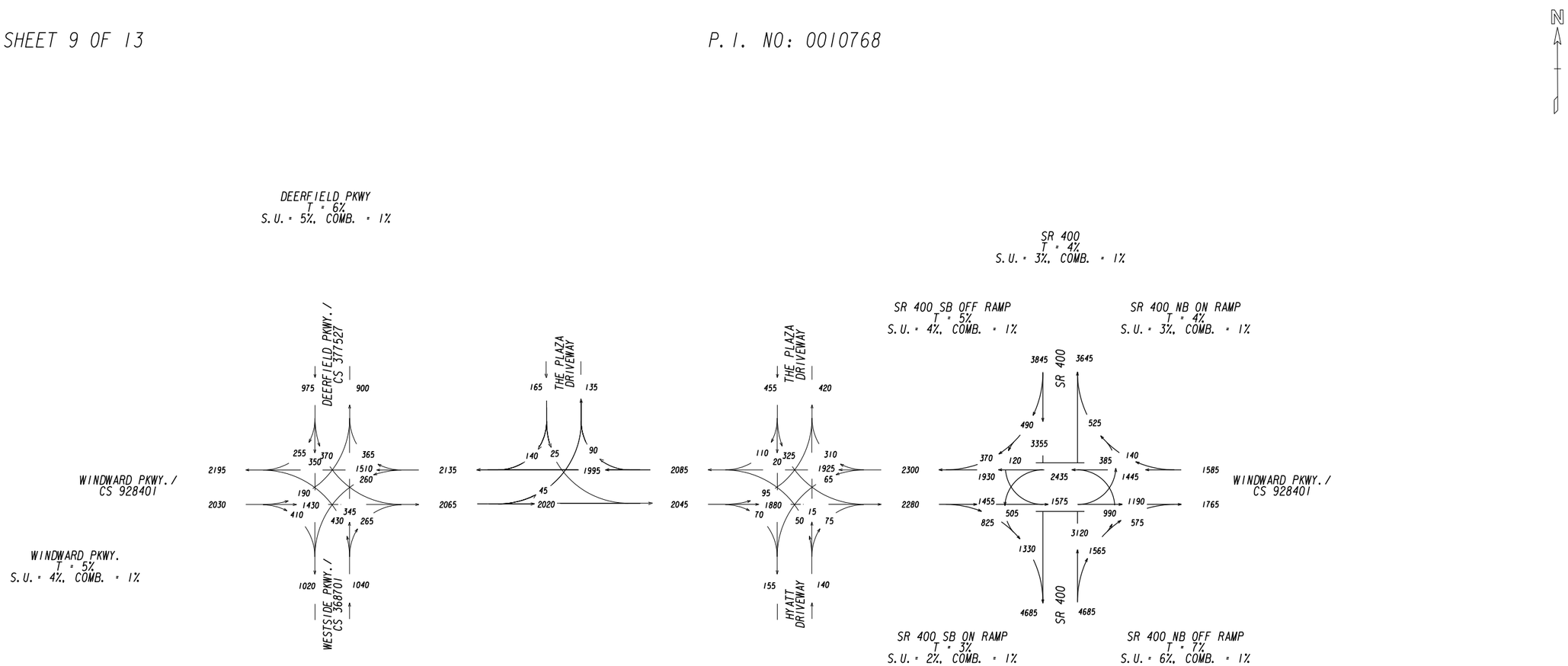

2039 NO BUILD MD DHV = 000

GRESHAM SMITH AND PARTNERS

GEORGIA
DEPARTMENT OF TRANSPORTATION

REVISION DATES

STATE OF GEORGIA
DEPARTMENT OF TRANSPORTATION

OFFICE: PROGRAM DELIVERY

TRAFFIC DIAGRAM
WINDWARD PARKWAY FROM DEERFIELD PARKWAY TO SR 400

FULTON COUNTY

DRAWING No. 10-009

4/27/2012 GPLN

SHEET 10 OF 13

P.I. NO: 0010768

N

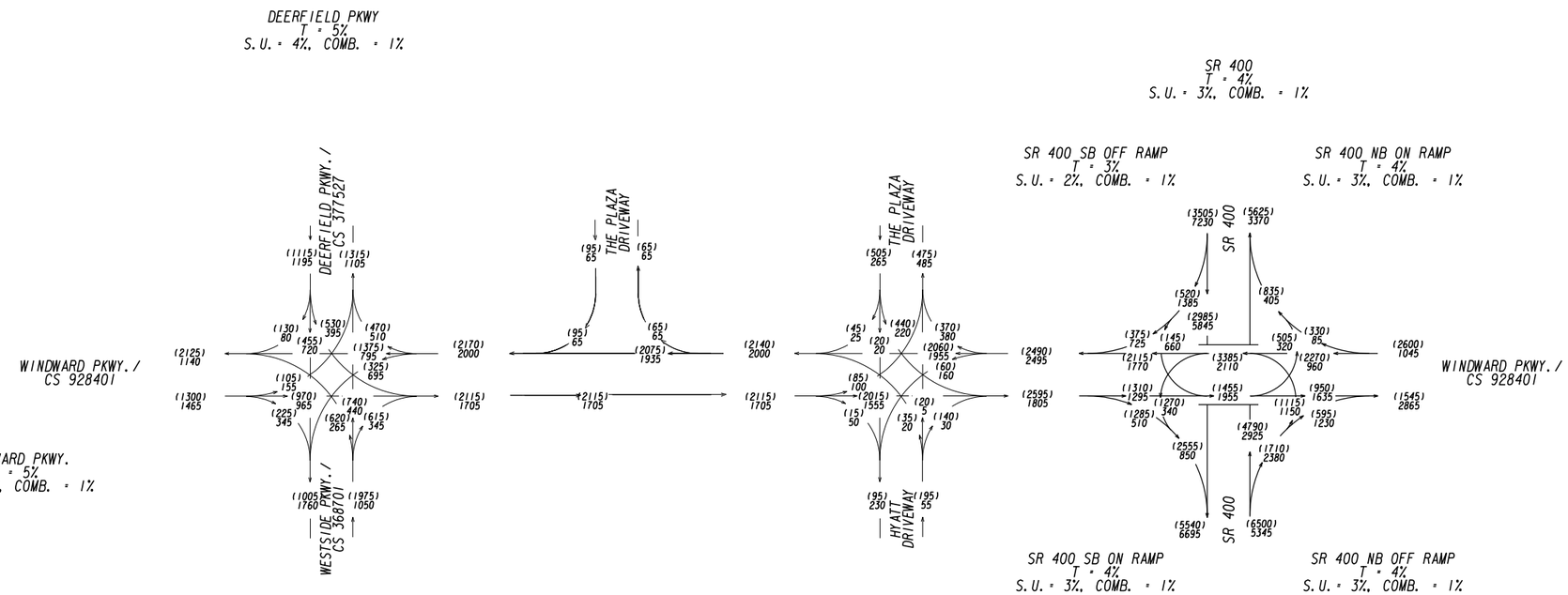

2039 BUILD PM DHV = (000)
2039 BUILD AM DHV = 000

GRESHAM SMITH AND PARTNERS

GEORGIA
DEPARTMENT OF TRANSPORTATION

REVISION DATES

STATE OF GEORGIA
DEPARTMENT OF TRANSPORTATION
OFFICE: PROGRAM DELIVERY

TRAFFIC DIAGRAM
WINDWARD PARKWAY FROM DEERFIELD PARKWAY TO SR 400

FULTON COUNTY

DRAWING No. 10-010

4/27/2012 GPLN

SHEET 11 OF 13

P.I. NO: 0010768

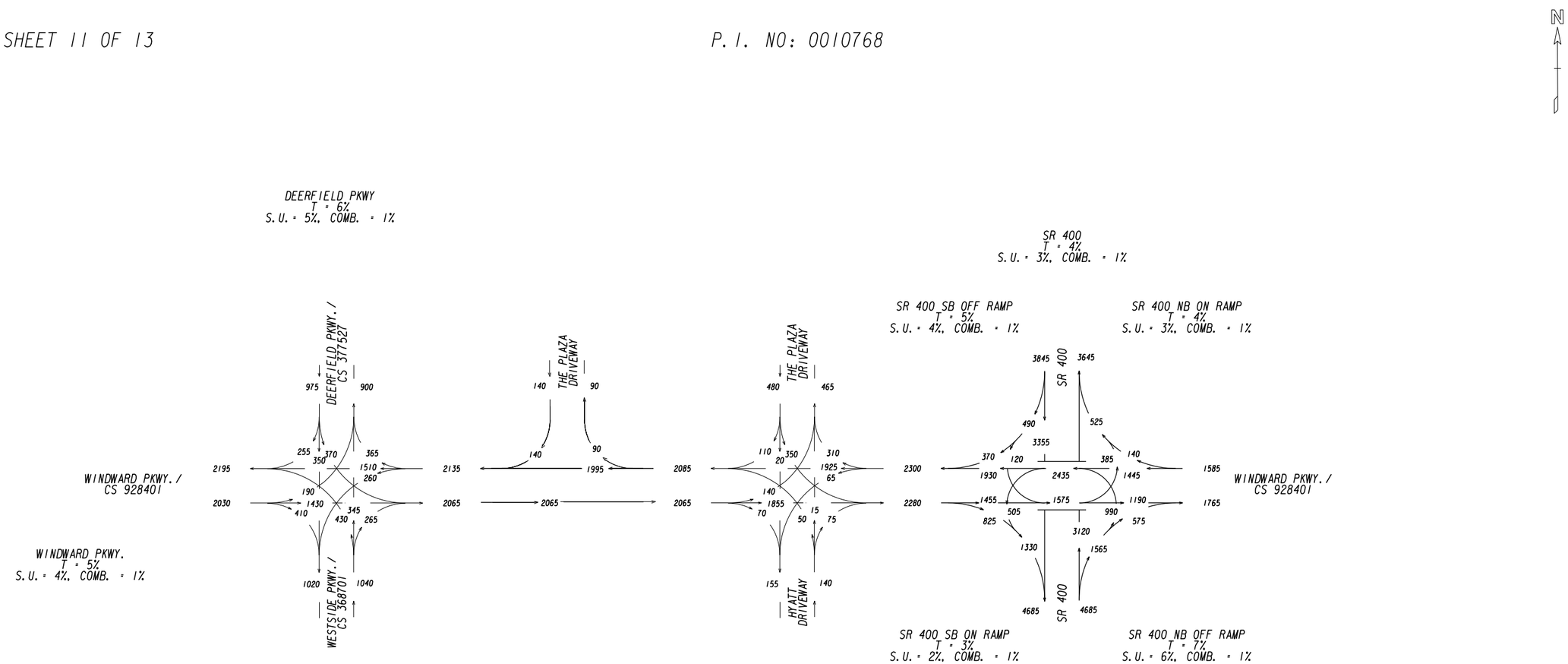

SHEET 12 OF 13

P.I. NO: 0010768

N

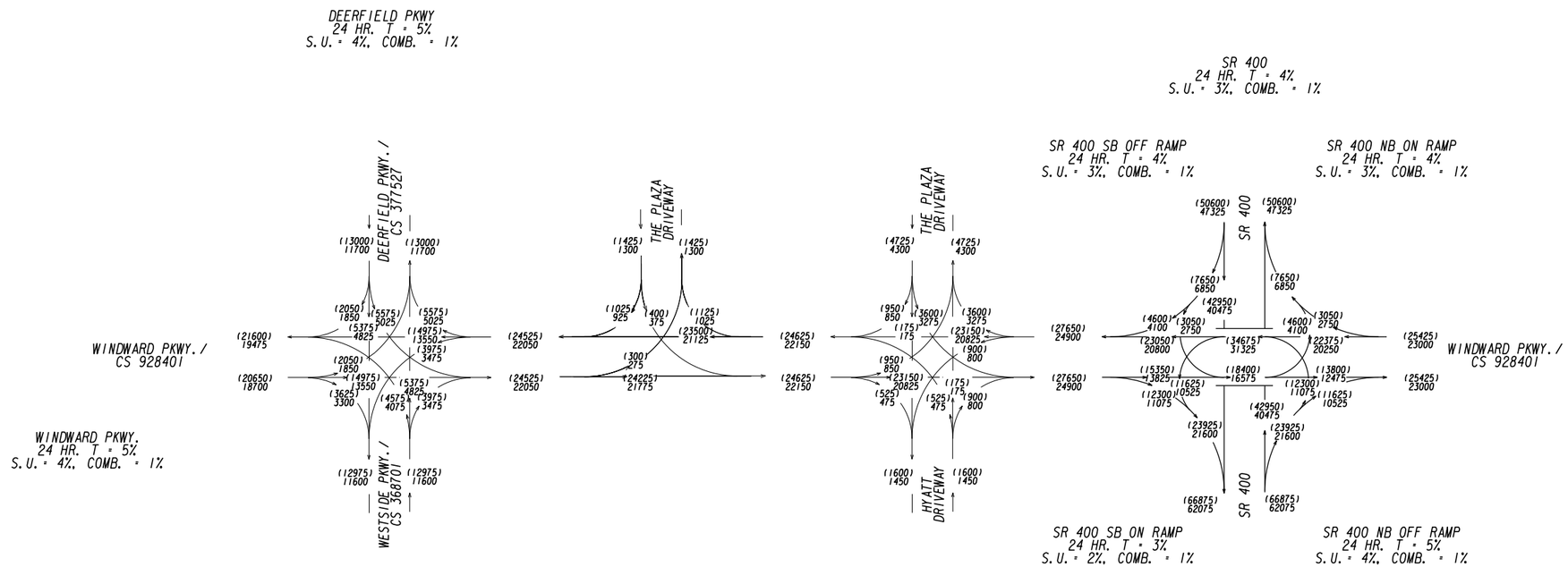

2039 NO BUILD AADT = (000)
2019 NO BUILD AADT = 000

GRESHAM SMITH AND PARTNERS

GEORGIA
DEPARTMENT OF TRANSPORTATION

REVISION DATES

STATE OF GEORGIA
DEPARTMENT OF TRANSPORTATION
OFFICE: PROGRAM DELIVERY

TRAFFIC DIAGRAM
WINDWARD PARKWAY FROM DEERFIELD PARKWAY TO SR 400
FULTON COUNTY

DRAWING No. 10-012

4/27/2012 GPLN

SHEET 13 OF 13

P.I. NO: 0010768

N

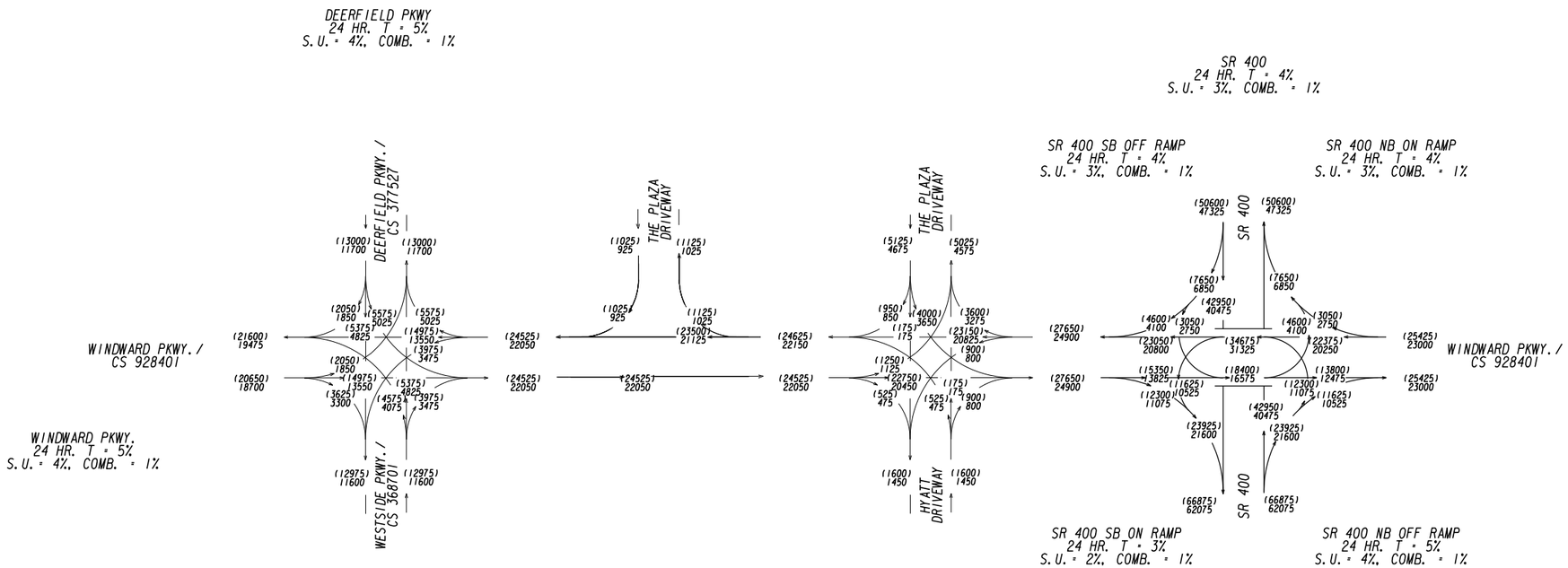

2039 BUILD AADT = (000)
2019 BUILD AADT = 000

GRESHAM SMITH AND PARTNERS

GEORGIA
DEPARTMENT OF TRANSPORTATION

REVISION DATES

STATE OF GEORGIA
DEPARTMENT OF TRANSPORTATION
OFFICE: PROGRAM DELIVERY

TRAFFIC DIAGRAM
WINDWARD PARKWAY FROM DEERFIELD PARKWAY TO SR 400

FULTON COUNTY

DRAWING No. 10-013

4/27/2012 GPLN

ATTACHMENT 5- CAPACITY ANALYSIS SUMMARY

As shown in Table 1, all study area intersections currently operate at a level of service (LOS) D or better in the AM, MD, and PM peak hours.

Table 1. Year 2014 Existing Intersection Levels of Service

	AM Peak Hour		MD Peak Hour		PM Peak Hour	
	LOS	**Delay (sec/veh)**	**LOS**	**Delay (sec/veh)**	**LOS**	**Delay (sec/veh)**
Windward Pkwy at SR 400 NB Ramps	C	27.6	C	32.0	D	38.2
Windward Pkwy at SR 400 SB Ramps	C	26.6	B	11.1	D	45.7
Windward Pkwy at Hyatt Dwy/The Plaza Dwy	B	14.3	A	9.6	C	22.9
Windward Pkwy at Deerfield Pkwy/Westside Pkwy	C	29.0	C	24.5	D	36.3

As shown in Table 2, all study area intersections would operate at a level of service (LOS) D or better in the AM, MD, and PM peak hours except for Windward Parkway at Deerfield Parkway/Westside Parkway intersection, which operates at a LOS E in the AM peak hour and Windward Parkway at SR 400 SB ramps intersection, which operates at a LOS E in the PM peak hour.

Table 2. Year 2019 No Build Intersection Levels of Service

	AM Peak Hour		MD Peak Hour		PM Peak Hour	
	LOS	**Delay (sec/veh)**	**LOS**	**Delay (sec/veh)**	**LOS**	**Delay (sec/veh)**
Windward Pkwy at SR 400 NB Ramps	C	29.9	C	29.9	D	46.4
Windward Pkwy at SR 400 SB Ramps	C	29.0	C	24.2	**E**	65.6
Windward Pkwy at Hyatt Dwy/The Plaza Dwy	B	16.9	B	12.6	C	22.1
Windward Pkwy at Deerfield Pkwy/Westside Pkwy	**E**	55.2	C	28.0	D	38.7

As shown in Table 3, all study area intersections would operate at a level of service (LOS) D or better in the AM, MD, and PM peak hours. With the addition of the second westbound left turn lane on Windward Parkway at the Westside Parkway intersection, the LOS improves from LOS E in the no build condition to LOS D in the build condition in the AM peak hour.

Table 3. Year 2019 Build Intersection Levels of Service

	AM Peak Hour		MD Peak Hour		PM Peak Hour	
	LOS	**Delay (sec/veh)**	**LOS**	**Delay (sec/veh)**	**LOS**	**Delay (sec/veh)**
Windward Pkwy at SR 400 NB Ramps	C	28.7	C	34.2	D	35.6
Windward Pkwy at SR 400 SB Ramps	C	29.7	B	17.9	D	53.5
Windward Pkwy at Hyatt Dwy/The Plaza Dwy	A	10.0	B	10.3	C	23.1
Windward Pkwy at Deerfield Pkwy/Westside Pkwy	D	43.5	C	32.4	D	47.8

As shown in Table 4, in 2039, the Windward Parkway at SR 400 NB Ramp intersection operations would decrease as a result of the increase in delay from 65.6 seconds to 76.5 seconds in the PM peak hour. Operations would decrease at the Windward Parkway at Westside Parkway/Deerfield Parkway intersection due to the increase in delay from 55.2 seconds to 77.1 seconds in the AM peak hour and from 38.7 seconds to 50.3 seconds in the PM peak hour. Overall, traffic conditions would decline on Windward Parkway at the SR 400 NB Ramps, SR 400 SB Ramps, Hyatt driveway, and Deerfield Parkway/Westside Parkway intersections under the No Build scenario.

Table 4. Year 2039 No Build Intersection Levels of Service

	AM Peak Hour		MD Peak Hour		PM Peak Hour	
	LOS	**Delay (sec/veh)**	**LOS**	**Delay (sec/veh)**	**LOS**	**Delay (sec/veh)**
Windward Pkwy at SR 400 NB Ramps	C	35.0	C	30.4	D	45.8
Windward Pkwy at SR 400 SB Ramps	C	27.7	B	12.6	**E**	**76.5**
Windward Pkwy at Hyatt Dwy/The Plaza Dwy	B	19.5	B	10.4	C	28.4
Windward Pkwy at Deerfield Pkwy/Westside Pkwy	**E**	**77.1**	C	29.1	D	50.3

As shown in Table 5, in 2039, the Windward Parkway at Deerfield Parkway/Westside Parkway intersection operations would improve from a LOS E to an LOS D in the AM peak hours. The delay at the Windward Deerfield Parkway/Westside Parkway intersection decreases from 77.1 seconds to 47.6 seconds in the AM peak hour. This is considered to be a result from adding a second westbound left turn lane on Windward Parkway at the Deerfield Parkway/Westside Parkway intersection. Overall, traffic conditions would improve on Windward Parkway at the SR 400 NB Ramps, SR 400 SB Ramps, Hyatt driveway, and Deerfield Parkway/Westside Parkway intersections under the No Build scenario.

Table 5. Year 2039 Build Intersection Levels of Service

	AM Peak Hour		MD Peak Hour		PM Peak Hour	
	LOS	**Delay (sec/veh)**	**LOS**	**Delay (sec/veh)**	**LOS**	**Delay (sec/veh)**
Windward Pkwy at SR 400 NB Ramps	C	34.4	D	37.7	D	44.3
Windward Pkwy at SR 400 SB Ramps	C	33.9	B	12.3	E	74.5
Windward Pkwy at Hyatt Dwy/The Plaza Dwy	B	10.6	B	10.3	C	27.1
Windward Pkwy at Deerfield Pkwy/Westside Pkwy	D	48.2	C	33.2	D	52.3

Movement	EBL	EBT	EBR	WBL	WBT	WBR	NBL	NBT	NBR	SBL	SBT	SBR
Lane Configurations												
Volume (veh/h)	134	851	304	244	700	447	204	370	251	348	529	68
Number	5	2	12	1	6	16	3	8	18	7	4	14
Initial Q (Qb), veh	0	0	0	0	0	0	0	0	0	0	0	0
Ped-Bike Adj(A_pbT)	1.00		1.00	1.00		1.00	1.00		1.00	1.00		1.00
Parking Bus, Adj	1.00	1.00	1.00	1.00	1.00	1.00	1.00	1.00	1.00	1.00	1.00	1.00
Adj Sat Flow, veh/h/ln	181.0	181.0	181.0	181.0	181.0	181.0	181.0	181.0	181.0	181.0	181.0	190.0
Adj Flow Rate, veh/h	140	886	0	254	729	0	212	385	0	362	551	0
Adj No. of Lanes	1	2	1	1	2	1	2	2	1	2	2	0
Peak Hour Factor	0.96	0.96	0.96	0.96	0.96	0.96	0.96	0.96	0.96	0.96	0.96	0.96
Percent Heavy Veh, %	5	5	5	5	5	5	5	5	5	5	5	5
Cap, veh/h	498	1585	676	411	1723	738	303	534	239	457	693	0
Arrive On Green	0.07	0.46	0.00	0.22	1.00	0.00	0.09	0.16	0.00	0.14	0.20	0.00
Sat Flow, veh/h	1723	3438	1538	1723	3438	1538	3343	3438	1538	3343	3529	0
Grp Volume(v), veh/h	140	886	0	254	729	0	212	385	0	362	551	0
Grp Sat Flow(s),veh/h/ln	1723	1719	1538	1723	1719	1538	1672	1719	1538	1672	1719	0
Q Serve(g_s), s	5.0	21.8	0.0	9.0	0.0	0.0	7.2	12.4	0.0	12.2	17.8	0.0
Cycle Q Clear(g_c), s	5.0	21.8	0.0	9.0	0.0	0.0	7.2	12.4	0.0	12.2	17.8	0.0
Prop In Lane	1.00		1.00	1.00		1.00	1.00		1.00	1.00		0.00
Lane Grp Cap(c), veh/h	498	1585	676	411	1723	738	303	534	239	457	693	0
V/C Ratio(X)	0.28	0.56	0.00	0.62	0.42	0.00	0.70	0.72	0.00	0.79	0.79	0.00
Avail Cap(c_a), veh/h	511	1585	676	562	1723	738	402	755	338	602	962	0
HCM Platoon Ratio	1.00	1.00	1.00	2.00	2.00	2.00	1.00	1.00	1.00	1.00	1.00	1.00
Upstream Filter(I)	1.00	1.00	0.00	1.00	1.00	0.00	1.00	1.00	0.00	1.00	1.00	0.00
Uniform Delay (d), s/veh	14.6	22.8	0.0	14.1	0.0	0.0	51.5	46.8	0.0	48.7	44.2	0.0
Incr Delay (d2), s/veh	0.1	1.4	0.0	0.6	0.8	0.0	1.8	0.8	0.0	3.8	2.1	0.0
Initial Q Delay(d3),s/veh	0.0	0.0	0.0	0.0	0.0	0.0	0.0	0.0	0.0	0.0	0.0	0.0
%ile BackOfQ(50%),veh/ln	2.3	10.7	0.0	4.2	0.2	0.0	3.4	5.9	0.0	5.9	8.6	0.0
LnGrp Delay(d),s/veh	14.8	24.2	0.0	14.7	0.8	0.0	53.3	47.7	0.0	52.5	46.3	0.0
LnGrp LOS	B	C		B	A		D	D		D	D	
Approach Vol, veh/h		1026			983			597			913	
Approach Delay, s/veh		22.9			4.4			49.7			48.8	
Approach LOS		C			A			D			D	

Timer	1	2	3	4	5	6	7	8
Assigned Phs	1	2	3	4	5	6	7	8
Phs Duration (G+Y+Rc), s	16.8	71.2	14.5	27.5	12.1	75.9	19.9	22.1
Change Period (Y+Rc), s	5.4	6.5*	5.1999998	5.6*	5.1999998	6.5*	5.1999998	5.6
Max Green Setting (Gmax), s	21.6	41.9	* 12.8	31.0*	7.8000002	55.9*	19.799999	24.0
Max Q Clear Time (g_c+I1), s	11.0	23.8	9.2	19.8	7.0	2.0	14.2	14.4
Green Ext Time (p_c), s	0.4	12.8	0.2	2.1	0.0	24.6	0.5	2.0

Intersection Summary	
HCM 2010 Ctrl Delay	29.0
HCM 2010 LOS	C

Notes

* HCM 2010 computational engine requires equal clearance times for the phases crossing the barrier.

Movement	EBL	EBT	EBR	WBL	WBT	WBR	NBL	NBT	NBR	SBL	SBT	SBR
Lane Configurations												
Volume (veh/h)	46	1341	41	139	1349	332	17	2	24	178	18	22
Number	5	2	12	1	6	16	3	8	18	7	4	14
Initial Q (Qb), veh	0	0	0	0	0	0	0	0	0	0	0	0
Ped-Bike Adj(A_pbT)	1.00		1.00	1.00		1.00	1.00		1.00	1.00		1.00
Parking Bus, Adj	1.00	1.00	1.00	1.00	1.00	1.00	1.00	1.00	1.00	1.00	1.00	1.00
Adj Sat Flow, veh/h/ln	181.0	181.0	190.0	181.0	181.0	181.0	190.0	181.0	181.0	181.0	181.0	181.0
Adj Flow Rate, veh/h	48	1397	43	145	1405	346	18	2	25	199	0	23
Adj No. of Lanes	1	2	0	1	2	1	0	1	1	2	0	1
Peak Hour Factor	0.96	0.96	0.96	0.96	0.96	0.96	0.96	0.96	0.96	0.96	0.96	0.96
Percent Heavy Veh, %	5	5	5	5	5	5	5	5	5	5	5	5
Cap, veh/h	239	2314	71	395	2367	1059	65	7	64	303	0	135
Arrive On Green	0.09	1.00	1.00	0.04	0.46	0.46	0.04	0.04	0.04	0.09	0.00	0.09
Sat Flow, veh/h	1723	3405	105	1723	3438	1538	1558	173	1538	3447	0	1538
Grp Volume(v), veh/h	48	704	736	145	1405	346	20	0	25	199	0	23
Grp Sat Flow(s),veh/h/ln	1723	1719	1791	1723	1719	1538	1732	0	1538	1723	0	1538
Q Serve(g_s), s	0.9	0.0	0.0	2.9	35.2	16.6	1.3	0.0	1.8	6.5	0.0	1.6
Cycle Q Clear(g_c), s	0.9	0.0	0.0	2.9	35.2	16.6	1.3	0.0	1.8	6.5	0.0	1.6
Prop In Lane	1.00		0.06	1.00		1.00	0.90		1.00	1.00		1.00
Lane Grp Cap(c), veh/h	239	1168	1217	395	2367	1059	72	0	64	303	0	135
V/C Ratio(X)	0.20	0.60	0.60	0.37	0.59	0.33	0.28	0.00	0.39	0.66	0.00	0.17
Avail Cap(c_a), veh/h	266	1168	1217	511	2367	1059	149	0	132	504	0	225
HCM Platoon Ratio	2.00	2.00	2.00	0.67	0.67	0.67	1.00	1.00	1.00	1.00	1.00	1.00
Upstream Filter(I)	1.00	1.00	1.00	0.76	0.76	0.76	1.00	0.00	1.00	1.00	0.00	1.00
Uniform Delay (d), s/veh	10.4	0.0	0.0	4.8	19.2	14.2	54.0	0.0	54.2	51.3	0.0	49.1
Incr Delay (d2), s/veh	0.2	2.3	2.2	0.2	0.8	0.6	0.8	0.0	1.4	2.4	0.0	0.6
Initial Q Delay(d3),s/veh	0.0	0.0	0.0	0.0	0.0	0.0	0.0	0.0	0.0	0.0	0.0	0.0
%ile BackOfQ(50%),veh/ln	0.5	0.7	0.8	1.3	17.0	7.2	0.6	0.0	0.8	3.2	0.0	0.7
LnGrp Delay(d),s/veh	10.5	2.3	2.2	5.0	20.1	14.8	54.8	0.0	55.7	53.7	0.0	49.6
LnGrp LOS	B	A	A	A	C	B	D		E	D		D
Approach Vol, veh/h		1488			1896			45			222	
Approach Delay, s/veh		2.5			18.0			55.3			53.3	
Approach LOS		A			B			E			D	

Timer	1	2	3	4	5	6	7	8
Assigned Phs	1	2		4	5	6		8
Phs Duration (G+Y+Rc), s	10.2	96.8		14.2	9.1	97.8		8.8
Change Period (Y+Rc), s	* 5.1999998	* 6		* 5.1999998	* 5.1999998	* 6		5.0
Max Green Setting (Gmax), s	* 12.8	* 71		* 15.8	* 5.8000002	* 78		9.0
Max Q Clear Time (g_c+I1), s	4.9	2.0		8.5	2.9	37.2		3.8
Green Ext Time (p_c), s	0.1	61.8		0.5	0.0	38.1		0.0

Intersection Summary	
HCM 2010 Ctrl Delay	14.3
HCM 2010 LOS	B

Notes

User approved pedestrian interval to be less than phase max green.

User approved volume balancing among the lanes for turning movement.

* HCM 2010 computational engine requires equal clearance times for the phases crossing the barrier.

Movement	EBL	EBT	EBR	WBL	WBT	WBR	NBL	NBT	NBR	SBL	SBT	SBR
Lane Configurations												
Volume (veh/h)	0	1112	427	298	1345	0	0	0	0	583	0	480
Number	5	2	12	1	6	16				7	4	14
Initial Q (Qb), veh	0	0	0	0	0	0				0	0	0
Ped-Bike Adj(A_pbT)	1.00		1.00	1.00		1.00				1.00		1.00
Parking Bus, Adj	1.00	1.00	1.00	1.00	1.00	1.00				1.00	1.00	1.00
Adj Sat Flow, veh/h/ln	0.0	181.0	182.7	182.7	181.0	0.0				182.7	0.0	182.7
Adj Flow Rate, veh/h	0	1146	0	307	1387	0				601	0	495
Adj No. of Lanes	0	4	1	2	2	0				2	0	2
Peak Hour Factor	0.97	0.97	0.97	0.97	0.97	0.97				0.97	0.97	0.97
Percent Heavy Veh, %	0	5	4	4	5	0				4	0	4
Cap, veh/h	0	2878	718	653	2370	0				821	0	665
Arrive On Green	0.00	0.15	0.00	0.26	0.92	0.00				0.24	0.00	0.24
Sat Flow, veh/h	0	6478	1553	3375	3529	0				3375	0	2733
Grp Volume(v), veh/h	0	1146	0	307	1387	0				601	0	495
Grp Sat Flow(s),veh/h/ln	0	1556	1553	1688	1719	0				1688	0	1367
Q Serve(g_s), s	0.0	19.8	0.0	9.1	8.6	0.0				19.5	0.0	19.9
Cycle Q Clear(g_c), s	0.0	19.8	0.0	9.1	8.6	0.0				19.5	0.0	19.9
Prop In Lane	0.00		1.00	1.00		0.00				1.00		1.00
Lane Grp Cap(c), veh/h	0	2878	718	653	2370	0				821	0	665
V/C Ratio(X)	0.00	0.40	0.00	0.47	0.59	0.00				0.73	0.00	0.74
Avail Cap(c_a), veh/h	0	2878	718	653	2370	0				1135	0	919
HCM Platoon Ratio	1.00	0.33	0.33	1.33	1.33	1.00				1.00	1.00	1.00
Upstream Filter(I)	0.00	0.75	0.00	0.86	0.86	0.00				1.00	0.00	1.00
Uniform Delay (d), s/veh	0.0	35.5	0.0	39.0	1.9	0.0				41.4	0.0	41.6
Incr Delay (d2), s/veh	0.0	0.3	0.0	1.0	0.9	0.0				1.5	0.0	2.1
Initial Q Delay(d3),s/veh	0.0	0.0	0.0	0.0	0.0	0.0				0.0	0.0	0.0
%ile BackOfQ(50%),veh/ln	0.0	8.6	0.0	4.4	4.0	0.0				9.3	0.0	7.7
LnGrp Delay(d),s/veh	0.0	35.8	0.0	40.0	2.8	0.0				43.0	0.0	43.7
LnGrp LOS		D		D	A					D		D
Approach Vol, veh/h		1146			1694						1096	
Approach Delay, s/veh		35.8			9.6						43.3	
Approach LOS		D			A						D	

Timer	1	2	3	4	5	6	7	8
Assigned Phs	1	2		4		6		
Phs Duration (G+Y+Rc), s	38.1	59.0		32.9		97.1		
Change Period (Y+Rc), s	7.5	6.5		6.0		7.5		
Max Green Setting (Gmax), s	19.5	52.5		38.0		78.5		
Max Q Clear Time (g_c+I1), s	11.1	21.8		21.9		10.6		
Green Ext Time (p_c), s	6.4	9.3		5.0		22.0		

Intersection Summary	
HCM 2010 Ctrl Delay	26.6
HCM 2010 LOS	C

Movement	EBL	EBT	EBR	WBL	WBT	WBR	NBL	NBT	NBR	SBL	SBT	SBR
Lane Configurations												
Volume (veh/h)	256	1443	0	0	789	72	856	0	1082	0	0	0
Number	5	2	12	1	6	16	3	8	18			
Initial Q (Qb), veh	0	0	0	0	0	0	0	0	0			
Ped-Bike Adj(A_pbT)	1.00		1.00	1.00		1.00	1.00		1.00			
Parking Bus, Adj	1.00	1.00	1.00	1.00	1.00	1.00	1.00	1.00	1.00			
Adj Sat Flow, veh/h/ln	182.7	181.0	0.0	0.0	181.0	182.7	182.7	0.0	182.7			
Adj Flow Rate, veh/h	264	1488	0	0	813	0	882	0	1115			
Adj No. of Lanes	2	2	0	0	4	1	2	0	2			
Peak Hour Factor	0.97	0.97	0.97	0.97	0.97	0.97	0.97	0.97	0.97			
Percent Heavy Veh, %	4	5	0	0	5	4	4	0	4			
Cap, veh/h	370	1701	0	0	2205	550	1481	0	1199			
Arrive On Green	0.22	0.99	0.00	0.00	0.35	0.00	0.44	0.00	0.44			
Sat Flow, veh/h	3375	3529	0	0	6478	1553	3375	0	2733			
Grp Volume(v), veh/h	264	1488	0	0	813	0	882	0	1115			
Grp Sat Flow(s),veh/h/ln	1688	1719	0	0	1556	1553	1688	0	1367			
Q Serve(g_s), s	9.4	4.3	0.0	0.0	12.5	0.0	25.7	0.0	50.0			
Cycle Q Clear(g_c), s	9.4	4.3	0.0	0.0	12.5	0.0	25.7	0.0	50.0			
Prop In Lane	1.00		0.00	0.00		1.00	1.00		1.00			
Lane Grp Cap(c), veh/h	370	1701	0	0	2205	550	1481	0	1199			
V/C Ratio(X)	0.71	0.87	0.00	0.00	0.37	0.00	0.60	0.00	0.93			
Avail Cap(c_a), veh/h	418	1701	0	0	2205	550	1498	0	1213			
HCM Platoon Ratio	2.00	2.00	1.00	1.00	1.00	1.00	1.00	1.00	1.00			
Upstream Filter(I)	0.86	0.86	0.00	0.00	1.00	0.00	1.00	0.00	1.00			
Uniform Delay (d), s/veh	48.6	0.4	0.0	0.0	31.0	0.0	27.6	0.0	34.4			
Incr Delay (d2), s/veh	4.3	5.8	0.0	0.0	0.5	0.0	0.6	0.0	12.5			
Initial Q Delay(d3),s/veh	0.0	0.0	0.0	0.0	0.0	0.0	0.0	0.0	0.0			
%ile BackOfQ(50%),veh/ln	4.6	1.6	0.0	0.0	5.5	0.0	12.0	0.0	20.8			
LnGrp Delay(d),s/veh	52.9	6.1	0.0	0.0	31.5	0.0	28.2	0.0	46.9			
LnGrp LOS	D	A			C		C		D			
Approach Vol, veh/h		1752			813			1997				
Approach Delay, s/veh		13.2			31.5			38.6				
Approach LOS		B			C			D				

Timer	1	2	3	4	5	6	7	8
Assigned Phs		2			5	6		8
Phs Duration (G+Y+Rc), s		68.7			18.2	50.5		61.3
Change Period (Y+Rc), s		6.4			6.6	6.4		6.6
Max Green Setting (Gmax), s		61.6			13.4	41.6		55.4
Max Q Clear Time (g_c+I1), s		6.3			11.4	14.5		52.0
Green Ext Time (p_c), s		40.6			0.2	22.9		2.7

Intersection Summary	
HCM 2010 Ctrl Delay	27.6
HCM 2010 LOS	C

Movement	EBL	EBT	EBR	WBL	WBT	WBR	NBL	NBT	NBR	SBL	SBT	SBR
Lane Configurations												
Volume (veh/h)	165	1259	360	150	1333	322	335	282	153	326	283	224
Number	5	2	12	1	6	16	3	8	18	7	4	14
Initial Q (Qb), veh	0	0	0	0	0	0	0	0	0	0	0	0
Ped-Bike Adj(A_pbT)	1.00		1.00	1.00		1.00	1.00		1.00	1.00		1.00
Parking Bus, Adj	1.00	1.00	1.00	1.00	1.00	1.00	1.00	1.00	1.00	1.00	1.00	1.00
Adj Sat Flow, veh/h/ln	181.0	181.0	181.0	181.0	181.0	181.0	181.0	181.0	181.0	181.0	181.0	190.0
Adj Flow Rate, veh/h	168	1285	0	153	1360	0	342	288	0	333	289	0
Adj No. of Lanes	1	2	1	1	2	1	2	2	1	2	2	0
Peak Hour Factor	0.98	0.98	0.98	0.98	0.98	0.98	0.98	0.98	0.98	0.98	0.98	0.98
Percent Heavy Veh, %	5	5	5	5	5	5	5	5	5	5	5	5
Cap, veh/h	389	1896	816	291	1889	813	425	413	185	425	413	0
Arrive On Green	0.07	0.55	0.00	0.14	1.00	0.00	0.13	0.12	0.00	0.13	0.12	0.00
Sat Flow, veh/h	1723	3438	1538	1723	3438	1538	3343	3438	1538	3343	3529	0
Grp Volume(v), veh/h	168	1285	0	153	1360	0	342	288	0	333	289	0
Grp Sat Flow(s),veh/h/ln	1723	1719	1538	1723	1719	1538	1672	1719	1538	1672	1719	0
Q Serve(g_s), s	5.1	32.0	0.0	4.7	0.0	0.0	11.9	9.6	0.0	11.6	9.7	0.0
Cycle Q Clear(g_c), s	5.1	32.0	0.0	4.7	0.0	0.0	11.9	9.6	0.0	11.6	9.7	0.0
Prop In Lane	1.00		1.00	1.00		1.00	1.00		1.00	1.00		0.00
Lane Grp Cap(c), veh/h	389	1896	816	291	1889	813	425	413	185	425	413	0
V/C Ratio(X)	0.43	0.68	0.00	0.53	0.72	0.00	0.81	0.70	0.00	0.78	0.70	0.00
Avail Cap(c_a), veh/h	456	1896	816	318	1889	813	447	517	231	559	632	0
HCM Platoon Ratio	1.00	1.00	1.00	2.00	2.00	2.00	1.00	1.00	1.00	1.00	1.00	1.00
Upstream Filter(I)	1.00	1.00	0.00	1.00	1.00	0.00	1.00	1.00	0.00	1.00	1.00	0.00
Uniform Delay (d), s/veh	10.2	19.2	0.0	15.3	0.0	0.0	50.8	50.6	0.0	50.6	50.6	0.0
Incr Delay (d2), s/veh	0.3	2.0	0.0	0.5	2.4	0.0	9.0	1.8	0.0	3.8	0.8	0.0
Initial Q Delay(d3),s/veh	0.0	0.0	0.0	0.0	0.0	0.0	0.0	0.0	0.0	0.0	0.0	0.0
%ile BackOfQ(50%),veh/ln	2.4	15.7	0.0	2.3	0.6	0.0	6.0	4.7	0.0	5.5	4.6	0.0
LnGrp Delay(d),s/veh	10.5	21.2	0.0	15.9	2.4	0.0	59.8	52.4	0.0	54.5	51.4	0.0
LnGrp LOS	B	C		B	A		E	D		D	D	
Approach Vol, veh/h		1453			1513			630			622	
Approach Delay, s/veh		20.0			3.8			56.4			53.0	
Approach LOS		B			A			E			D	

Timer	1	2	3	4	5	6	7	8
Assigned Phs	1	2	3	4	5	6	7	8
Phs Duration (G+Y+Rc), s	12.1	80.3	19.2	18.4	12.4	80.1	19.2	18.4
Change Period (Y+Rc), s	5.4	6.5*	5.1999998	5.6*	5.1999998	6.5*	5.1999998	5.6
Max Green Setting (Gmax), s	8.6	63.5	* 14.8	20.4	* 11.8	60.5*	18.799999	16.4
Max Q Clear Time (g_c+I1), s	6.7	34.0	13.9	11.7	7.1	2.0	13.6	11.6
Green Ext Time (p_c), s	0.0	26.5	0.1	1.1	0.1	48.1	0.4	0.8

Intersection Summary	
HCM 2010 Ctrl Delay	24.5
HCM 2010 LOS	C

Notes

* HCM 2010 computational engine requires equal clearance times for the phases crossing the barrier.

Movement	EBL	EBT	EBR	WBL	WBT	WBR	NBL	NBT	NBR	SBL	SBT	SBR
Lane Configurations												
Volume (veh/h)	84	1576	61	56	1617	273	43	11	63	286	15	94
Number	5	2	12	1	6	16	3	8	18	7	4	14
Initial Q (Qb), veh	0	0	0	0	0	0	0	0	0	0	0	0
Ped-Bike Adj(A_pbT)	1.00		1.00	1.00		1.00	1.00		1.00	1.00		1.00
Parking Bus, Adj	1.00	1.00	1.00	1.00	1.00	1.00	1.00	1.00	1.00	1.00	1.00	1.00
Adj Sat Flow, veh/h/ln	181.0	181.0	190.0	181.0	181.0	181.0	190.0	181.0	181.0	181.0	181.0	181.0
Adj Flow Rate, veh/h	87	1625	63	58	1667	281	44	11	65	306	0	97
Adj No. of Lanes	1	2	0	1	2	1	0	1	1	2	0	1
Peak Hour Factor	0.97	0.97	0.97	0.97	0.97	0.97	0.97	0.97	0.97	0.97	0.97	0.97
Percent Heavy Veh, %	5	5	5	5	5	5	5	5	5	5	5	5
Cap, veh/h	281	2152	83	314	2179	975	91	23	100	415	0	185
Arrive On Green	0.10	1.00	1.00	0.09	1.00	1.00	0.07	0.07	0.07	0.12	0.00	0.12
Sat Flow, veh/h	1723	3375	130	1723	3438	1538	1392	348	1538	3447	0	1538
Grp Volume(v), veh/h	87	825	863	58	1667	281	55	0	65	306	0	97
Grp Sat Flow(s),veh/h/ln	1723	1719	1787	1723	1719	1538	1740	0	1538	1723	0	1538
Q Serve(g_s), s	2.1	0.0	0.0	1.4	0.0	0.0	3.7	0.0	5.0	10.4	0.0	7.2
Cycle Q Clear(g_c), s	2.1	0.0	0.0	1.4	0.0	0.0	3.7	0.0	5.0	10.4	0.0	7.2
Prop In Lane	1.00		0.07	1.00		1.00	0.80		1.00	1.00		1.00
Lane Grp Cap(c), veh/h	281	1096	1139	314	2179	975	113	0	100	415	0	185
V/C Ratio(X)	0.31	0.75	0.76	0.18	0.76	0.29	0.48	0.00	0.65	0.74	0.00	0.52
Avail Cap(c_a), veh/h	296	1096	1139	336	2179	975	143	0	127	567	0	253
HCM Platoon Ratio	2.00	2.00	2.00	2.00	2.00	2.00	1.00	1.00	1.00	1.00	1.00	1.00
Upstream Filter(I)	1.00	1.00	1.00	0.75	0.75	0.75	1.00	0.00	1.00	1.00	0.00	1.00
Uniform Delay (d), s/veh	6.4	0.0	0.0	6.4	0.0	0.0	54.8	0.0	55.4	51.6	0.0	50.2
Incr Delay (d2), s/veh	0.2	4.8	4.7	0.1	2.0	0.6	1.2	0.0	3.4	3.3	0.0	2.3
Initial Q Delay(d3),s/veh	0.0	0.0	0.0	0.0	0.0	0.0	0.0	0.0	0.0	0.0	0.0	0.0
%ile BackOfQ(50%),veh/ln	1.0	1.5	1.5	0.6	0.6	0.2	1.8	0.0	2.2	5.2	0.0	3.2
LnGrp Delay(d),s/veh	6.6	4.8	4.7	6.5	2.0	0.6	56.0	0.0	58.8	54.9	0.0	52.4
LnGrp LOS	A	A	A	A	A	A	E		E	D		D
Approach Vol, veh/h		1775			2006			120			403	
Approach Delay, s/veh		4.9			1.9			57.5			54.3	
Approach LOS		A			A			E			D	

Timer	1	2	3	4	5	6	7	8
Assigned Phs	1	2		4	5	6		8
Phs Duration (G+Y+Rc), s	9.5	90.0		18.6	9.9	89.5		11.9
Change Period (Y+Rc), s	* 5.1999998	* 6		* 5.1999998	* 5.1999998	* 6		5.0
Max Green Setting (Gmax), s	* 5.8000002	* 75		* 18.799999	* 5.8000002	* 75		9.0
Max Q Clear Time (g_c+I1), s	3.4	2.0		12.4	4.1	2.0		7.0
Green Ext Time (p_c), s	0.0	69.5		1.0	0.0	69.5		0.0

Intersection Summary	
HCM 2010 Ctrl Delay	9.6
HCM 2010 LOS	A

Notes

User approved pedestrian interval to be less than phase max green.

User approved volume balancing among the lanes for turning movement.

* HCM 2010 computational engine requires equal clearance times for the phases crossing the barrier.

Movement	EBL	EBT	EBR	WBL	WBT	WBR	NBL	NBT	NBR	SBL	SBT	SBR
Lane Configurations												
Volume (veh/h)	0	1229	693	442	1657	0	0	0	0	106	0	292
Number	5	2	12	1	6	16				7	4	14
Initial Q (Qb), veh	0	0	0	0	0	0				0	0	0
Ped-Bike Adj(A_pbT)	1.00		1.00	1.00		1.00				1.00		1.00
Parking Bus, Adj	1.00	1.00	1.00	1.00	1.00	1.00				1.00	1.00	1.00
Adj Sat Flow, veh/h/ln	0.0	181.0	181.0	181.0	181.0	0.0				181.0	0.0	181.0
Adj Flow Rate, veh/h	0	1254	0	451	1691	0				108	0	298
Adj No. of Lanes	0	4	1	2	2	0				2	0	2
Peak Hour Factor	0.98	0.98	0.98	0.98	0.98	0.98				0.98	0.98	0.98
Percent Heavy Veh, %	0	5	5	5	5	0				5	0	5
Cap, veh/h	0	3451	853	721	2753	0				460	0	373
Arrive On Green	0.00	1.00	0.00	0.43	1.00	0.00				0.14	0.00	0.14
Sat Flow, veh/h	0	6478	1538	3343	3529	0				3343	0	2707
Grp Volume(v), veh/h	0	1254	0	451	1691	0				108	0	298
Grp Sat Flow(s),veh/h/ln	0	1556	1538	1672	1719	0				1672	0	1354
Q Serve(g_s), s	0.0	0.0	0.0	13.6	0.0	0.0				3.7	0.0	13.9
Cycle Q Clear(g_c), s	0.0	0.0	0.0	13.6	0.0	0.0				3.7	0.0	13.9
Prop In Lane	0.00		1.00	1.00		0.00				1.00		1.00
Lane Grp Cap(c), veh/h	0	3451	853	721	2753	0				460	0	373
V/C Ratio(X)	0.00	0.36	0.00	0.63	0.61	0.00				0.23	0.00	0.80
Avail Cap(c_a), veh/h	0	3451	853	721	2753	0				463	0	375
HCM Platoon Ratio	1.00	2.00	2.00	2.00	2.00	1.00				1.00	1.00	1.00
Upstream Filter(I)	0.00	0.60	0.00	0.77	0.77	0.00				1.00	0.00	1.00
Uniform Delay (d), s/veh	0.0	0.0	0.0	32.9	0.0	0.0				49.9	0.0	54.3
Incr Delay (d2), s/veh	0.0	0.2	0.0	1.9	0.8	0.0				0.3	0.0	11.6
Initial Q Delay(d3),s/veh	0.0	0.0	0.0	0.0	0.0	0.0				0.0	0.0	0.0
%ile BackOfQ(50%),veh/ln	0.0	0.0	0.0	6.5	0.3	0.0				1.7	0.0	5.8
LnGrp Delay(d),s/veh	0.0	0.2	0.0	34.8	0.8	0.0				50.2	0.0	65.8
LnGrp LOS		A		C	A					D		E
Approach Vol, veh/h		1254			2142						406	
Approach Delay, s/veh		0.2			8.0						61.7	
Approach LOS		A			A						E	

Timer	1	2	3	4	5	6	7	8
Assigned Phs	1	2		4		6		
Phs Duration (G+Y+Rc), s	32.1	76.0		21.9		108.1		
Change Period (Y+Rc), s	7.5	6.5		6.0		7.5		
Max Green Setting (Gmax), s	24.5	69.5		16.0		100.5		
Max Q Clear Time (g_c+I1), s	15.6	2.0		15.9		2.0		
Green Ext Time (p_c), s	7.7	12.1		0.0		39.5		

Intersection Summary	
HCM 2010 Ctrl Delay	11.1
HCM 2010 LOS	B

Movement	EBL	EBT	EBR	WBL	WBT	WBR	NBL	NBT	NBR	SBL	SBT	SBR
Lane Configurations												
Volume (veh/h)	302	1030	0	0	1257	121	839	0	508	0	0	0
Number	5	2	12	1	6	16	3	8	18			
Initial Q (Qb), veh	0	0	0	0	0	0	0	0	0			
Ped-Bike Adj(A_pbT)	1.00		1.00	1.00		1.00	1.00		1.00			
Parking Bus, Adj	1.00	1.00	1.00	1.00	1.00	1.00	1.00	1.00	1.00			
Adj Sat Flow, veh/h/ln	181.0	181.0	0.0	0.0	181.0	181.0	181.0	0.0	181.0			
Adj Flow Rate, veh/h	305	1040	0	0	1270	0	847	0	513			
Adj No. of Lanes	2	2	0	0	4	1	2	0	2			
Peak Hour Factor	0.99	0.99	0.99	0.99	0.99	0.99	0.99	0.99	0.99			
Percent Heavy Veh, %	5	5	0	0	5	5	5	0	5			
Cap, veh/h	456	2053	0	0	2649	655	1094	0	886			
Arrive On Green	0.05	0.20	0.00	0.00	0.43	0.00	0.33	0.00	0.33			
Sat Flow, veh/h	3343	3529	0	0	6478	1538	3343	0	2707			
Grp Volume(v), veh/h	305	1040	0	0	1270	0	847	0	513			
Grp Sat Flow(s),veh/h/ln	1672	1719	0	0	1556	1538	1672	0	1354			
Q Serve(g_s), s	10.2	30.7	0.0	0.0	16.8	0.0	26.0	0.0	17.9			
Cycle Q Clear(g_c), s	10.2	30.7	0.0	0.0	16.8	0.0	26.0	0.0	17.9			
Prop In Lane	1.00		0.00	0.00		1.00	1.00		1.00			
Lane Grp Cap(c), veh/h	456	2053	0	0	2649	655	1094	0	886			
V/C Ratio(X)	0.67	0.51	0.00	0.00	0.48	0.00	0.77	0.00	0.58			
Avail Cap(c_a), veh/h	646	2053	0	0	2649	655	1568	0	1270			
HCM Platoon Ratio	0.33	0.33	1.00	1.00	1.00	1.00	1.00	1.00	1.00			
Upstream Filter(I)	0.95	0.95	0.00	0.00	1.00	0.00	1.00	0.00	1.00			
Uniform Delay (d), s/veh	51.8	30.7	0.0	0.0	23.6	0.0	34.5	0.0	31.8			
Incr Delay (d2), s/veh	1.6	0.8	0.0	0.0	0.6	0.0	1.6	0.0	0.6			
Initial Q Delay(d3),s/veh	0.0	0.0	0.0	0.0	0.0	0.0	0.0	0.0	0.0			
%ile BackOfQ(50%),veh/ln	4.8	14.9	0.0	0.0	7.3	0.0	12.2	0.0	6.8			
LnGrp Delay(d),s/veh	53.4	31.6	0.0	0.0	24.2	0.0	36.1	0.0	32.4			
LnGrp LOS	D	C			C		D		C			
Approach Vol, veh/h		1345			1270			1360				
Approach Delay, s/veh		36.5			24.2			34.7				
Approach LOS		D			C			C				

Timer	1	2	3	4	5	6	7	8
Assigned Phs		2			5	6		8
Phs Duration (G+Y+Rc), s		88.1			19.5	68.6		41.9
Change Period (Y+Rc), s		6.4			6.6	6.4		6.6
Max Green Setting (Gmax), s		65.6			19.4	39.6		51.4
Max Q Clear Time (g_c+I1), s		32.7			12.2	18.8		28.0
Green Ext Time (p_c), s		26.6			0.7	18.0		7.3

Intersection Summary	
HCM 2010 Ctrl Delay	32.0
HCM 2010 LOS	C

HCM Signalized Intersection Capacity Analysis
1: Westside Pkwy/Deerfield Pkwy & Windward Pkwy

10/16/2014

Movement	EBL	EBT	EBR	WBL	WBT	WBR	NBL	NBT	NBR	SBL	SBT	SBR
Lane Configurations												
Volume (vph)	89	856	198	217	1211	412	355	557	210	464	379	111
Ideal Flow (vphpl)	1900	1900	1900	1900	1900	1900	1900	1900	1900	1900	1900	1900
Total Lost time (s)	4.0	4.0	6.5	4.0	4.0	6.5	4.0	4.0	4.0	4.0	4.0	
Lane Util. Factor	1.00	0.95	1.00	1.00	0.95	1.00	0.97	0.95	1.00	0.97	0.95	
Frt	1.00	1.00	0.85	1.00	1.00	0.85	1.00	1.00	0.85	1.00	0.97	
Flt Protected	0.95	1.00	1.00	0.95	1.00	1.00	0.95	1.00	1.00	0.95	1.00	
Satd. Flow (prot)	1736	3471	1553	1736	3471	1553	3367	3471	1553	3367	3353	
Flt Permitted	0.11	1.00	1.00	0.18	1.00	1.00	0.95	1.00	1.00	0.95	1.00	
Satd. Flow (perm)	199	3471	1553	330	3471	1553	3367	3471	1553	3367	3353	
Peak-hour factor, PHF	0.99	0.99	0.99	0.99	0.99	0.99	0.99	0.99	0.99	0.99	0.99	0.99
Adj. Flow (vph)	90	865	200	219	1223	416	359	563	212	469	383	112
RTOR Reduction (vph)	0	0	92	0	0	174	0	0	169	0	20	0
Lane Group Flow (vph)	90	865	108	219	1223	242	359	563	43	469	476	0
Heavy Vehicles (%)	4%	4%	4%	4%	4%	4%	4%	4%	4%	4%	4%	4%
Turn Type	pm+pt	NA	Perm	pm+pt	NA	Perm	Prot	NA	Perm	Prot	NA	
Protected Phases	5	2		1	6		3	8		7	4	
Permitted Phases	2		2	6		6			8			
Actuated Green, G (s)	62.6	56.0	56.0	75.1	63.3	63.3	18.4	25.4	25.4	22.2	29.2	
Effective Green, g (s)	65.0	58.5	56.0	76.5	65.8	63.3	19.6	27.0	27.0	23.4	30.8	
Actuated g/C Ratio	0.46	0.42	0.40	0.55	0.47	0.45	0.14	0.19	0.19	0.17	0.22	
Clearance Time (s)	5.2	6.5	6.5	5.4	6.5	6.5	5.2	5.6	5.6	5.2	5.6	
Vehicle Extension (s)	2.0	5.0	5.0	2.0	5.0	5.0	2.0	2.0	2.0	2.0	2.0	
Lane Grp Cap (vph)	178	1450	621	331	1631	702	471	669	299	562	737	
v/s Ratio Prot	0.03	0.25		c0.07	c0.35		0.11	c0.16		c0.14	c0.14	
v/s Ratio Perm	0.21		0.07	0.29		0.16			0.03			
v/c Ratio	0.51	0.60	0.17	0.66	0.75	0.34	0.76	0.84	0.14	0.83	0.65	
Uniform Delay, d1	25.3	31.6	27.1	20.8	30.4	24.9	58.0	54.4	46.9	56.4	49.6	
Progression Factor	1.00	1.00	1.00	1.00	0.35	0.25	1.00	1.00	1.00	1.00	1.00	
Incremental Delay, d2	0.8	1.8	0.6	2.5	2.1	0.9	6.5	9.0	0.1	9.9	1.5	
Delay (s)	26.1	33.4	27.7	23.2	12.6	7.0	64.4	63.5	47.0	66.3	51.1	
Level of Service	C	C	C	C	B	A	E	E	D	E	D	
Approach Delay (s)		31.9			12.6			60.7			58.5	
Approach LOS		C			B			E			E	

Intersection Summary			
HCM 2000 Control Delay	36.3	HCM 2000 Level of Service	D
HCM 2000 Volume to Capacity ratio	0.78		
Actuated Cycle Length (s)	140.0	Sum of lost time (s)	16.0
Intersection Capacity Utilization	80.4%	ICU Level of Service	D
Analysis Period (min)	15		

c Critical Lane Group

Movement	EBL	EBT	EBR	WBL	WBT	WBR	NBL	NBT	NBR	SBL	SBT	SBR
Lane Configurations												
Volume (vph)	56	1472	11	49	1743	324	28	15	123	367	14	39
Ideal Flow (vphpl)	1900	1900	1900	1900	1900	1900	1900	1900	1900	1900	1900	1900
Total Lost time (s)	4.0	4.0		4.0	4.0	4.0		4.0	4.0	4.0	4.0	4.0
Lane Util. Factor	1.00	0.95		1.00	0.95	1.00		1.00	1.00	0.95	0.95	1.00
Frt	1.00	1.00		1.00	1.00	0.85		1.00	0.85	1.00	1.00	0.85
Flt Protected	0.95	1.00		0.95	1.00	1.00		0.97	1.00	0.95	0.96	1.00
Satd. Flow (prot)	1736	3467		1736	3471	1553		1769	1553	1649	1659	1553
Flt Permitted	0.05	1.00		0.10	1.00	1.00		0.97	1.00	0.95	0.96	1.00
Satd. Flow (perm)	92	3467		176	3471	1553		1769	1553	1649	1659	1553
Peak-hour factor, PHF	0.97	0.97	0.97	0.97	0.97	0.97	0.97	0.97	0.97	0.97	0.97	0.97
Adj. Flow (vph)	58	1518	11	51	1797	334	29	15	127	378	14	40
RTOR Reduction (vph)	0	0	0	0	0	87	0	0	98	0	0	34
Lane Group Flow (vph)	58	1529	0	51	1797	247	0	44	29	197	195	6
Heavy Vehicles (%)	4%	4%	4%	4%	4%	4%	4%	4%	4%	4%	4%	4%
Turn Type	pm+pt	NA		pm+pt	NA	Perm	Split	NA	Perm	Split	NA	Perm
Protected Phases	5	2		1	6		8	8		4	4	
Permitted Phases	2			6		6			8			4
Actuated Green, G (s)	91.2	86.6		91.0	86.5	86.5		7.3	7.3	20.2	20.2	20.2
Effective Green, g (s)	93.6	88.6		93.4	88.5	88.5		8.3	8.3	21.4	21.4	21.4
Actuated g/C Ratio	0.67	0.63		0.67	0.63	0.63		0.06	0.06	0.15	0.15	0.15
Clearance Time (s)	5.2	6.0		5.2	6.0	6.0		5.0	5.0	5.2	5.2	5.2
Vehicle Extension (s)	2.0	5.0		2.0	5.0	5.0		1.5	1.5	3.0	3.0	3.0
Lane Grp Cap (vph)	129	2194		180	2194	981		104	92	252	253	237
v/s Ratio Prot	c0.02	0.44		0.01	c0.52			c0.02		c0.12	0.12	
v/s Ratio Perm	0.28			0.18		0.16			0.02			0.00
v/c Ratio	0.45	0.70		0.28	0.82	0.25		0.42	0.32	0.78	0.77	0.03
Uniform Delay, d1	21.4	16.9		14.0	19.6	11.3		63.5	63.1	57.1	56.9	50.4
Progression Factor	1.56	1.10		0.36	0.54	0.63		1.00	1.00	1.00	1.00	1.00
Incremental Delay, d2	0.7	1.5		0.2	2.6	0.4		1.0	0.7	14.5	13.5	0.0
Delay (s)	34.0	20.1		5.3	13.2	7.6		64.6	63.9	71.6	70.4	50.5
Level of Service	C	C		A	B	A		E	E	E	E	D
Approach Delay (s)		20.6			12.2			64.0			69.1	
Approach LOS		C			B			E			E	

Intersection Summary			
HCM 2000 Control Delay	22.9	HCM 2000 Level of Service	C
HCM 2000 Volume to Capacity ratio	0.77		
Actuated Cycle Length (s)	140.0	Sum of lost time (s)	16.0
Intersection Capacity Utilization	72.0%	ICU Level of Service	C
Analysis Period (min)	15		

c Critical Lane Group

Movement	EBL	EBT	EBR	WBL	WBT	WBR	NBL	NBT	NBR	SBL	SBT	SBR
Lane Configurations												
Volume (vph)	0	965	990	1119	1821	0	0	0	0	125	0	300
Ideal Flow (vphpl)	1900	1900	1900	1900	1900	1900	1900	1900	1900	1900	1900	1900
Total Lost time (s)		4.0	4.0	4.0	4.0					4.0		4.0
Lane Util. Factor		0.86	1.00	0.97	0.95					0.97		0.88
Frt		1.00	0.85	1.00	1.00					1.00		0.85
Flt Protected		1.00	1.00	0.95	1.00					0.95		1.00
Satd. Flow (prot)		6285	1568	3400	3471					3400		2760
Flt Permitted		1.00	1.00	0.95	1.00					0.95		1.00
Satd. Flow (perm)		6285	1568	3400	3471					3400		2760
Peak-hour factor, PHF	0.96	0.96	0.96	0.96	0.96	0.96	0.96	0.96	0.96	0.96	0.96	0.96
Adj. Flow (vph)	0	1005	1031	1166	1897	0	0	0	0	130	0	312
RTOR Reduction (vph)	0	0	98	0	0	0	0	0	0	0	0	94
Lane Group Flow (vph)	0	1005	933	1166	1897	0	0	0	0	130	0	218
Heavy Vehicles (%)	3%	4%	3%	3%	4%	3%	3%	3%	3%	3%	3%	3%
Turn Type		NA	Perm	Prot	NA					Prot		Perm
Protected Phases		2		1	6					4		
Permitted Phases			2									4
Actuated Green, G (s)		70.5	70.5	40.5	117.5					9.0		9.0
Effective Green, g (s)		73.0	73.0	44.0	121.0					11.0		11.0
Actuated g/C Ratio		0.52	0.52	0.31	0.86					0.08		0.08
Clearance Time (s)		6.5	6.5	7.5	7.5					6.0		6.0
Vehicle Extension (s)		4.0	4.0	5.0	4.0					3.0		3.0
Lane Grp Cap (vph)		3277	817	1068	2999					267		216
v/s Ratio Prot		0.16		c0.34	0.55					0.04		
v/s Ratio Perm			c0.60									c0.08
v/c Ratio		0.31	1.14	1.09	0.63					0.49		1.01
Uniform Delay, d1		19.1	33.5	48.0	2.8					61.8		64.5
Progression Factor		0.82	0.81	0.28	1.45					1.00		1.00
Incremental Delay, d2		0.2	75.0	50.8	0.6					1.4		63.7
Delay (s)		15.9	102.3	64.2	4.7					63.2		128.2
Level of Service		B	F	E	A					E		F
Approach Delay (s)		59.7			27.3			0.0			109.0	
Approach LOS		E			C			A			F	

Intersection Summary			
HCM 2000 Control Delay	45.7	HCM 2000 Level of Service	D
HCM 2000 Volume to Capacity ratio	1.11		
Actuated Cycle Length (s)	140.0	Sum of lost time (s)	12.0
Intersection Capacity Utilization	129.4%	ICU Level of Service	H
Analysis Period (min)	15		

c Critical Lane Group

Movement	EBL	EBT	EBR	WBL	WBT	WBR	NBL	NBT	NBR	SBL	SBT	SBR
Lane Configurations												
Volume (vph)	303	790	0	0	1995	288	953	0	525	0	0	0
Ideal Flow (vphpl)	1900	1900	1900	1900	1900	1900	1900	1900	1900	1900	1900	1900
Total Lost time (s)	4.0	4.0			4.0	4.0	4.6		4.6			
Lane Util. Factor	0.97	0.95			0.86	1.00	0.97		0.88			
Frt	1.00	1.00			1.00	0.85	1.00		0.85			
Flt Protected	0.95	1.00			1.00	1.00	0.95		1.00			
Satd. Flow (prot)	3400	3471			6285	1568	3400		2760			
Flt Permitted	0.95	1.00			1.00	1.00	0.95		1.00			
Satd. Flow (perm)	3400	3471			6285	1568	3400		2760			
Peak-hour factor, PHF	0.93	0.93	0.93	0.93	0.93	0.93	0.93	0.93	0.93	0.93	0.93	0.93
Adj. Flow (vph)	326	849	0	0	2145	310	1025	0	565	0	0	0
RTOR Reduction (vph)	0	0	0	0	0	177	0	0	176	0	0	0
Lane Group Flow (vph)	326	849	0	0	2145	133	1025	0	389	0	0	0
Heavy Vehicles (%)	3%	4%	3%	3%	4%	3%	3%	3%	3%	3%	3%	3%
Turn Type	Prot	NA			NA	Perm	Prot		Perm			
Protected Phases	5	2			6		8					
Permitted Phases						6			8			
Actuated Green, G (s)	15.4	79.6			57.6	57.6	47.4		47.4			
Effective Green, g (s)	18.0	82.0			60.0	60.0	49.4		49.4			
Actuated g/C Ratio	0.13	0.59			0.43	0.43	0.35		0.35			
Clearance Time (s)	6.6	6.4			6.4	6.4	6.6		6.6			
Vehicle Extension (s)	3.0	5.0			5.0	5.0	3.0		3.0			
Lane Grp Cap (vph)	437	2033			2693	672	1199		973			
v/s Ratio Prot	c0.10	0.24			c0.34		c0.30					
v/s Ratio Perm						0.08			0.14			
v/c Ratio	0.75	0.42			0.80	0.20	0.85		0.40			
Uniform Delay, d1	58.8	15.9			34.7	25.0	42.0		34.1			
Progression Factor	0.76	1.88			1.00	1.00	1.00		1.00			
Incremental Delay, d2	6.6	0.6			2.5	0.7	6.1		0.3			
Delay (s)	51.5	30.4			37.2	25.6	48.1		34.4			
Level of Service	D	C			D	C	D		C			
Approach Delay (s)		36.3			35.8			43.2			0.0	
Approach LOS		D			D			D			A	

Intersection Summary			
HCM 2000 Control Delay	38.2	HCM 2000 Level of Service	D
HCM 2000 Volume to Capacity ratio	0.81		
Actuated Cycle Length (s)	140.0	Sum of lost time (s)	12.6
Intersection Capacity Utilization	129.4%	ICU Level of Service	H
Analysis Period (min)	15		

c Critical Lane Group

Movement	EBL	EBT	EBR	WBL	WBT	WBR	NBL	NBT	NBR	SBL	SBT	SBR
Lane Configurations												
Volume (veh/h)	136	864	309	591	711	454	235	390	304	353	635	69
Number	5	2	12	1	6	16	3	8	18	7	4	14
Initial Q (Qb), veh	0	0	0	0	0	0	0	0	0	0	0	0
Ped-Bike Adj(A_pbT)	1.00		1.00	1.00		1.00	1.00		1.00	1.00		1.00
Parking Bus, Adj	1.00	1.00	1.00	1.00	1.00	1.00	1.00	1.00	1.00	1.00	1.00	1.00
Adj Sat Flow, veh/h/ln	181.0	181.0	181.0	181.0	181.0	181.0	181.0	181.0	181.0	181.0	181.0	190.0
Adj Flow Rate, veh/h	142	900	0	616	741	0	245	406	0	368	661	0
Adj No. of Lanes	1	2	1	1	2	1	2	2	1	2	2	0
Peak Hour Factor	0.96	0.96	0.96	0.96	0.96	0.96	0.96	0.96	0.96	0.96	0.96	0.96
Percent Heavy Veh, %	5	5	5	5	5	5	5	5	5	5	5	5
Cap, veh/h	374	953	397	593	1746	752	257	554	248	437	739	0
Arrive On Green	0.08	0.28	0.00	0.51	0.85	0.00	0.08	0.16	0.00	0.13	0.21	0.00
Sat Flow, veh/h	1723	3438	1538	1723	3438	1538	3343	3438	1538	3343	3529	0
Grp Volume(v), veh/h	142	900	0	616	741	0	245	406	0	368	661	0
Grp Sat Flow(s),veh/h/ln	1723	1719	1538	1723	1719	1538	1672	1719	1538	1672	1719	0
Q Serve(g_s), s	7.7	33.3	0.0	40.0	6.6	0.0	9.5	14.6	0.0	14.0	24.3	0.0
Cycle Q Clear(g_c), s	7.7	33.3	0.0	40.0	6.6	0.0	9.5	14.6	0.0	14.0	24.3	0.0
Prop In Lane	1.00		1.00	1.00		1.00	1.00		1.00	1.00		0.00
Lane Grp Cap(c), veh/h	374	953	397	593	1746	752	257	554	248	437	739	0
V/C Ratio(X)	0.38	0.94	0.00	1.04	0.42	0.00	0.95	0.73	0.00	0.84	0.89	0.00
Avail Cap(c_a), veh/h	374	953	397	593	1746	752	257	556	249	437	741	0
HCM Platoon Ratio	1.00	1.00	1.00	1.67	1.67	1.67	1.00	1.00	1.00	1.00	1.00	1.00
Upstream Filter(I)	1.00	1.00	0.00	1.00	1.00	0.00	1.00	1.00	0.00	1.00	1.00	0.00
Uniform Delay (d), s/veh	30.5	46.0	0.0	23.8	5.4	0.0	59.7	51.8	0.0	55.1	49.6	0.0
Incr Delay (d2), s/veh	0.2	18.5	0.0	47.2	0.8	0.0	42.6	4.3	0.0	13.1	13.0	0.0
Initial Q Delay(d3),s/veh	0.0	0.0	0.0	0.0	0.0	0.0	0.0	0.0	0.0	0.0	0.0	0.0
%ile BackOfQ(50%),veh/ln	3.7	18.2	0.0	28.7	3.2	0.0	5.9	7.3	0.0	7.2	12.9	0.0
LnGrp Delay(d),s/veh	30.7	64.5	0.0	71.1	6.1	0.0	102.3	56.2	0.0	68.2	62.5	0.0
LnGrp LOS	C	E		F	A		F	E		E	E	
Approach Vol, veh/h		1042			1357			651			1029	
Approach Delay, s/veh		59.9			35.6			73.6			64.6	
Approach LOS		E			D			E			E	

Timer	1	2	3	4	5	6	7	8
Assigned Phs	1	2	3	4	5	6	7	8
Phs Duration (G+Y+Rc), s	44.0	40.1	14.0	31.9	14.0	70.1	21.0	24.9
Change Period (Y+Rc), s	5.4	6.5*	5.1999998	5.6*	5.1999998	6.5*	5.1999998	5.6
Max Green Setting (Gmax), s	38.6	33.5*	8.8000002	26.4*	8.8000002	63.5	* 15.8	19.4
Max Q Clear Time (g_c+I1), s	42.0	35.3	11.5	26.3	9.7	8.6	16.0	16.6
Green Ext Time (p_c), s	0.0	0.0	0.0	0.1	0.0	25.4	0.0	1.1

Intersection Summary	
HCM 2010 Ctrl Delay	55.2
HCM 2010 LOS	E

Notes

* HCM 2010 computational engine requires equal clearance times for the phases crossing the barrier.

Movement	EBL	EBT	EBR	WBL	WBT	WBR	NBL	NBT	NBR	SBL	SBT	SBR
Lane Configurations												
Volume (veh/h)	47	1410	42	141	1712	337	17	2	24	181	18	22
Number	5	2	12	1	6	16	3	8	18	7	4	14
Initial Q (Qb), veh	0	0	0	0	0	0	0	0	0	0	0	0
Ped-Bike Adj(A_pbT)	1.00		1.00	1.00		1.00	1.00		1.00	1.00		1.00
Parking Bus, Adj	1.00	1.00	1.00	1.00	1.00	1.00	1.00	1.00	1.00	1.00	1.00	1.00
Adj Sat Flow, veh/h/ln	181.0	181.0	190.0	181.0	181.0	181.0	190.0	181.0	181.0	181.0	181.0	181.0
Adj Flow Rate, veh/h	49	1469	44	147	1783	351	18	2	25	203	0	23
Adj No. of Lanes	1	2	0	1	2	1	0	1	1	2	0	1
Peak Hour Factor	0.96	0.96	0.96	0.96	0.96	0.96	0.96	0.96	0.96	0.96	0.96	0.96
Percent Heavy Veh, %	5	5	5	5	5	5	5	5	5	5	5	5
Cap, veh/h	184	2322	69	378	2372	1061	64	7	64	304	0	136
Arrive On Green	0.09	1.00	1.00	0.04	0.46	0.46	0.04	0.04	0.04	0.09	0.00	0.09
Sat Flow, veh/h	1723	3409	102	1723	3438	1538	1558	173	1538	3447	0	1538
Grp Volume(v), veh/h	49	740	773	147	1783	351	20	0	25	203	0	23
Grp Sat Flow(s),veh/h/ln	1723	1719	1792	1723	1719	1538	1732	0	1538	1723	0	1538
Q Serve(g_s), s	1.0	0.0	0.0	2.9	50.2	17.0	1.3	0.0	1.9	6.7	0.0	1.6
Cycle Q Clear(g_c), s	1.0	0.0	0.0	2.9	50.2	17.0	1.3	0.0	1.9	6.7	0.0	1.6
Prop In Lane	1.00		0.06	1.00		1.00	0.90		1.00	1.00		1.00
Lane Grp Cap(c), veh/h	184	1171	1220	378	2372	1061	71	0	64	304	0	136
V/C Ratio(X)	0.27	0.63	0.63	0.39	0.75	0.33	0.28	0.00	0.39	0.67	0.00	0.17
Avail Cap(c_a), veh/h	211	1171	1220	463	2372	1061	147	0	131	470	0	210
HCM Platoon Ratio	2.00	2.00	2.00	0.67	0.67	0.67	1.00	1.00	1.00	1.00	1.00	1.00
Upstream Filter(I)	1.00	1.00	1.00	0.60	0.60	0.60	1.00	0.00	1.00	1.00	0.00	1.00
Uniform Delay (d), s/veh	17.7	0.0	0.0	4.9	23.3	14.4	54.6	0.0	54.8	51.8	0.0	49.5
Incr Delay (d2), s/veh	0.3	2.6	2.5	0.1	1.4	0.5	0.8	0.0	1.5	2.5	0.0	0.6
Initial Q Delay(d3),s/veh	0.0	0.0	0.0	0.0	0.0	0.0	0.0	0.0	0.0	0.0	0.0	0.0
%ile BackOfQ(50%),veh/ln	0.9	0.8	0.9	1.4	24.3	7.4	0.6	0.0	0.8	3.3	0.0	0.7
LnGrp Delay(d),s/veh	18.0	2.6	2.5	5.0	24.6	14.9	55.4	0.0	56.3	54.4	0.0	50.1
LnGrp LOS	B	A	A	A	C	B	E		E	D		D
Approach Vol, veh/h		1562			2281			45			226	
Approach Delay, s/veh		3.0			21.9			55.9			53.9	
Approach LOS		A			C			E			D	

Timer	1	2	3	4	5	6	7	8
Assigned Phs	1	2		4	5	6		8
Phs Duration (G+Y+Rc), s	10.2	96.6		14.4	9.2	97.6		8.8
Change Period (Y+Rc), s	* 5.1999998	* 6		* 5.1999998	* 5.1999998	* 6		5.0
Max Green Setting (Gmax), s	* 10.8	* 74		* 14.8	* 5.8000002	* 79		9.0
Max Q Clear Time (g_c+I1), s	4.9	2.0		8.7	3.0	52.2		3.9
Green Ext Time (p_c), s	0.1	68.6		0.5	0.0	26.3		0.0

Intersection Summary	
HCM 2010 Ctrl Delay	16.9
HCM 2010 LOS	B

Notes

User approved pedestrian interval to be less than phase max green.

User approved volume balancing among the lanes for turning movement.

* HCM 2010 computational engine requires equal clearance times for the phases crossing the barrier.

Movement	EBL	EBT	EBR	WBL	WBT	WBR	NBL	NBT	NBR	SBL	SBT	SBR
Lane Configurations												
Volume (veh/h)	0	1157	454	302	1561	0	0	0	0	592	0	634
Number	5	2	12	1	6	16				7	4	14
Initial Q (Qb), veh	0	0	0	0	0	0				0	0	0
Ped-Bike Adj(A_pbT)	1.00		1.00	1.00		1.00				1.00		1.00
Parking Bus, Adj	1.00	1.00	1.00	1.00	1.00	1.00				1.00	1.00	1.00
Adj Sat Flow, veh/h/ln	0.0	181.0	182.7	182.7	181.0	0.0				182.7	0.0	182.7
Adj Flow Rate, veh/h	0	1193	0	311	1609	0				610	0	654
Adj No. of Lanes	0	4	1	2	2	0				2	0	2
Peak Hour Factor	0.97	0.97	0.97	0.97	0.97	0.97				0.97	0.97	0.97
Percent Heavy Veh, %	0	5	4	4	5	0				4	0	4
Cap, veh/h	0	2862	714	535	2235	0				968	0	783
Arrive On Green	0.00	0.15	0.00	0.21	0.86	0.00				0.29	0.00	0.29
Sat Flow, veh/h	0	6478	1553	3375	3529	0				3375	0	2733
Grp Volume(v), veh/h	0	1193	0	311	1609	0				610	0	654
Grp Sat Flow(s),veh/h/ln	0	1556	1553	1688	1719	0				1688	0	1367
Q Serve(g_s), s	0.0	21.9	0.0	10.5	21.2	0.0				19.9	0.0	28.3
Cycle Q Clear(g_c), s	0.0	21.9	0.0	10.5	21.2	0.0				19.9	0.0	28.3
Prop In Lane	0.00		1.00	1.00		0.00				1.00		1.00
Lane Grp Cap(c), veh/h	0	2862	714	535	2235	0				968	0	783
V/C Ratio(X)	0.00	0.42	0.00	0.58	0.72	0.00				0.63	0.00	0.83
Avail Cap(c_a), veh/h	0	2862	714	535	2235	0				1070	0	867
HCM Platoon Ratio	1.00	0.33	0.33	1.33	1.33	1.00				1.00	1.00	1.00
Upstream Filter(I)	0.00	0.72	0.00	0.79	0.79	0.00				1.00	0.00	1.00
Uniform Delay (d), s/veh	0.0	38.2	0.0	46.0	4.4	0.0				39.2	0.0	42.2
Incr Delay (d2), s/veh	0.0	0.3	0.0	2.0	1.6	0.0				1.0	0.0	6.6
Initial Q Delay(d3),s/veh	0.0	0.0	0.0	0.0	0.0	0.0				0.0	0.0	0.0
%ile BackOfQ(50%),veh/ln	0.0	9.5	0.0	5.0	9.9	0.0				9.4	0.0	11.3
LnGrp Delay(d),s/veh	0.0	38.5	0.0	48.0	6.0	0.0				40.2	0.0	48.8
LnGrp LOS		D		D	A					D		D
Approach Vol, veh/h		1193			1920						1264	
Approach Delay, s/veh		38.5			12.8						44.6	
Approach LOS		D			B						D	

Timer	1	2	3	4	5	6	7	8
Assigned Phs	1	2		4		6		
Phs Duration (G+Y+Rc), s	27.8	62.0		40.2		89.8		
Change Period (Y+Rc), s	7.5	6.5		6.0		7.5		
Max Green Setting (Gmax), s	16.5	55.5		38.0		78.5		
Max Q Clear Time (g_c+I1), s	12.5	23.9		30.3		23.2		
Green Ext Time (p_c), s	3.5	9.9		3.9		26.0		

Intersection Summary	
HCM 2010 Ctrl Delay	29.0
HCM 2010 LOS	C

Movement	EBL	EBT	EBR	WBL	WBT	WBR	NBL	NBT	NBR	SBL	SBT	SBR
Lane Configurations												
Volume (veh/h)	281	1472	0	0	850	73	1016	0	1098	0	0	0
Number	5	2	12	1	6	16	3	8	18			
Initial Q (Qb), veh	0	0	0	0	0	0	0	0	0			
Ped-Bike Adj(A_pbT)	1.00		1.00	1.00		1.00	1.00		1.00			
Parking Bus, Adj	1.00	1.00	1.00	1.00	1.00	1.00	1.00	1.00	1.00			
Adj Sat Flow, veh/h/ln	182.7	181.0	0.0	0.0	181.0	182.7	182.7	0.0	182.7			
Adj Flow Rate, veh/h	290	1518	0	0	876	0	1047	0	1132			
Adj No. of Lanes	2	2	0	0	4	1	2	0	2			
Peak Hour Factor	0.97	0.97	0.97	0.97	0.97	0.97	0.97	0.97	0.97			
Percent Heavy Veh, %	4	5	0	0	5	4	4	0	4			
Cap, veh/h	394	1720	0	0	2195	547	1464	0	1185			
Arrive On Green	0.23	1.00	0.00	0.00	0.35	0.00	0.43	0.00	0.43			
Sat Flow, veh/h	3375	3529	0	0	6478	1553	3375	0	2733			
Grp Volume(v), veh/h	290	1518	0	0	876	0	1047	0	1132			
Grp Sat Flow(s),veh/h/ln	1688	1719	0	0	1556	1553	1688	0	1367			
Q Serve(g_s), s	10.3	0.0	0.0	0.0	13.8	0.0	33.1	0.0	52.0			
Cycle Q Clear(g_c), s	10.3	0.0	0.0	0.0	13.8	0.0	33.1	0.0	52.0			
Prop In Lane	1.00		0.00	0.00		1.00	1.00		1.00			
Lane Grp Cap(c), veh/h	394	1720	0	0	2195	547	1464	0	1185			
V/C Ratio(X)	0.74	0.88	0.00	0.00	0.40	0.00	0.72	0.00	0.96			
Avail Cap(c_a), veh/h	442	1720	0	0	2195	547	1465	0	1186			
HCM Platoon Ratio	2.00	2.00	1.00	1.00	1.00	1.00	1.00	1.00	1.00			
Upstream Filter(I)	0.87	0.87	0.00	0.00	1.00	0.00	1.00	0.00	1.00			
Uniform Delay (d), s/veh	47.9	0.0	0.0	0.0	31.7	0.0	30.2	0.0	35.6			
Incr Delay (d2), s/veh	4.9	6.1	0.0	0.0	0.5	0.0	1.7	0.0	16.5			
Initial Q Delay(d3),s/veh	0.0	0.0	0.0	0.0	0.0	0.0	0.0	0.0	0.0			
%ile BackOfQ(50%),veh/ln	5.0	1.5	0.0	0.0	6.0	0.0	15.8	0.0	22.2			
LnGrp Delay(d),s/veh	52.8	6.1	0.0	0.0	32.2	0.0	31.9	0.0	52.1			
LnGrp LOS	D	A			C		C		D			
Approach Vol, veh/h		1808			876			2179				
Approach Delay, s/veh		13.6			32.2			42.4				
Approach LOS		B			C			D				

Timer	1	2	3	4	5	6	7	8
Assigned Phs		2			5	6		8
Phs Duration (G+Y+Rc), s		69.0			19.2	49.9		61.0
Change Period (Y+Rc), s		6.4			6.6	6.4		6.6
Max Green Setting (Gmax), s		62.6			14.4	41.6		54.4
Max Q Clear Time (g_c+I1), s		2.0			12.3	15.8		54.0
Green Ext Time (p_c), s		45.2			0.2	22.4		0.3

Intersection Summary	
HCM 2010 Ctrl Delay	29.9
HCM 2010 LOS	C

Movement	EBL	EBT	EBR	WBL	WBT	WBR	NBL	NBT	NBR	SBL	SBT	SBR
Lane Configurations												
Volume (veh/h)	167	1278	365	226	1353	327	382	307	229	331	308	227
Number	5	2	12	1	6	16	3	8	18	7	4	14
Initial Q (Qb), veh	0	0	0	0	0	0	0	0	0	0	0	0
Ped-Bike Adj(A_pbT)	1.00		1.00	1.00		1.00	1.00		1.00	1.00		1.00
Parking Bus, Adj	1.00	1.00	1.00	1.00	1.00	1.00	1.00	1.00	1.00	1.00	1.00	1.00
Adj Sat Flow, veh/h/ln	181.0	181.0	181.0	181.0	181.0	181.0	181.0	181.0	181.0	181.0	181.0	190.0
Adj Flow Rate, veh/h	170	1304	0	231	1381	0	390	313	0	338	314	0
Adj No. of Lanes	1	2	1	1	2	1	2	2	1	2	2	0
Peak Hour Factor	0.98	0.98	0.98	0.98	0.98	0.98	0.98	0.98	0.98	0.98	0.98	0.98
Percent Heavy Veh, %	5	5	5	5	5	5	5	5	5	5	5	5
Cap, veh/h	372	1766	760	303	1839	793	471	481	215	425	433	0
Arrive On Green	0.07	0.51	0.00	0.19	1.00	0.00	0.14	0.14	0.00	0.13	0.13	0.00
Sat Flow, veh/h	1723	3438	1538	1723	3438	1538	3343	3438	1538	3343	3529	0
Grp Volume(v), veh/h	170	1304	0	231	1381	0	390	313	0	338	314	0
Grp Sat Flow(s),veh/h/ln	1723	1719	1538	1723	1719	1538	1672	1719	1538	1672	1719	0
Q Serve(g_s), s	5.9	37.8	0.0	8.3	0.0	0.0	14.4	10.9	0.0	12.5	11.2	0.0
Cycle Q Clear(g_c), s	5.9	37.8	0.0	8.3	0.0	0.0	14.4	10.9	0.0	12.5	11.2	0.0
Prop In Lane	1.00		1.00	1.00		1.00	1.00		1.00	1.00		0.00
Lane Grp Cap(c), veh/h	372	1766	760	303	1839	793	471	481	215	425	433	0
V/C Ratio(X)	0.46	0.74	0.00	0.76	0.75	0.00	0.83	0.65	0.00	0.80	0.72	0.00
Avail Cap(c_a), veh/h	410	1766	760	386	1839	793	526	622	278	552	649	0
HCM Platoon Ratio	1.00	1.00	1.00	2.00	2.00	2.00	1.00	1.00	1.00	1.00	1.00	1.00
Upstream Filter(I)	1.00	1.00	0.00	1.00	1.00	0.00	1.00	1.00	0.00	1.00	1.00	0.00
Uniform Delay (d), s/veh	12.7	24.2	0.0	20.4	0.0	0.0	53.1	51.7	0.0	53.9	53.4	0.0
Incr Delay (d2), s/veh	0.3	2.8	0.0	4.8	2.9	0.0	8.6	0.6	0.0	4.5	0.9	0.0
Initial Q Delay(d3),s/veh	0.0	0.0	0.0	0.0	0.0	0.0	0.0	0.0	0.0	0.0	0.0	0.0
%ile BackOfQ(50%),veh/ln	2.8	18.6	0.0	4.3	0.7	0.0	7.2	5.3	0.0	6.0	5.4	0.0
LnGrp Delay(d),s/veh	13.0	27.0	0.0	25.2	2.9	0.0	61.7	52.3	0.0	58.4	54.3	0.0
LnGrp LOS	B	C		C	A		E	D		E	D	
Approach Vol, veh/h		1474			1612			703			652	
Approach Delay, s/veh		25.4			6.1			57.5			56.4	
Approach LOS		C			A			E			E	

Timer	1	2	3	4	5	6	7	8
Assigned Phs	1	2	3	4	5	6	7	8
Phs Duration (G+Y+Rc), s	15.9	82.2	21.9	20.0	13.2	84.9	20.1	21.8
Change Period (Y+Rc), s	5.4	6.5*	5.1999998	5.6*	5.1999998	6.5*	5.1999998	5.6
Max Green Setting (Gmax), s	16.6	59.5*	18.799999	22.4	* 10.8	65.5*	19.799999	21.4
Max Q Clear Time (g_c+I1), s	10.3	39.8	16.4	13.2	7.9	2.0	14.5	12.9
Green Ext Time (p_c), s	0.2	18.4	0.3	1.3	0.1	52.1	0.5	1.2

Intersection Summary	
HCM 2010 Ctrl Delay	28.0
HCM 2010 LOS	C

Notes

* HCM 2010 computational engine requires equal clearance times for the phases crossing the barrier.

Movement	EBL	EBT	EBR	WBL	WBT	WBR	NBL	NBT	NBR	SBL	SBT	SBR
Lane Configurations												
Volume (veh/h)	85	1674	62	57	1715	277	44	11	64	290	15	95
Number	5	2	12	1	6	16	3	8	18	7	4	14
Initial Q (Qb), veh	0	0	0	0	0	0	0	0	0	0	0	0
Ped-Bike Adj(A_pbT)	1.00		1.00	1.00		1.00	1.00		1.00	1.00		1.00
Parking Bus, Adj	1.00	1.00	1.00	1.00	1.00	1.00	1.00	1.00	1.00	1.00	1.00	1.00
Adj Sat Flow, veh/h/ln	181.0	181.0	190.0	181.0	181.0	181.0	190.0	181.0	181.0	181.0	181.0	181.0
Adj Flow Rate, veh/h	88	1726	64	59	1768	286	45	11	66	310	0	98
Adj No. of Lanes	1	2	0	1	2	1	0	1	1	2	0	1
Peak Hour Factor	0.97	0.97	0.97	0.97	0.97	0.97	0.97	0.97	0.97	0.97	0.97	0.97
Percent Heavy Veh, %	5	5	5	5	5	5	5	5	5	5	5	5
Cap, veh/h	217	2207	81	293	2234	999	90	22	99	410	0	183
Arrive On Green	0.09	1.00	1.00	0.06	0.86	0.86	0.06	0.06	0.06	0.12	0.00	0.12
Sat Flow, veh/h	1723	3382	125	1723	3438	1538	1398	342	1538	3447	0	1538
Grp Volume(v), veh/h	88	874	916	59	1768	286	56	0	66	310	0	98
Grp Sat Flow(s),veh/h/ln	1723	1719	1787	1723	1719	1538	1740	0	1538	1723	0	1538
Q Serve(g_s), s	2.2	0.0	0.0	1.5	29.1	4.4	4.1	0.0	5.5	11.5	0.0	7.9
Cycle Q Clear(g_c), s	2.2	0.0	0.0	1.5	29.1	4.4	4.1	0.0	5.5	11.5	0.0	7.9
Prop In Lane	1.00		0.07	1.00		1.00	0.80		1.00	1.00		1.00
Lane Grp Cap(c), veh/h	217	1122	1167	293	2234	999	112	0	99	410	0	183
V/C Ratio(X)	0.41	0.78	0.79	0.20	0.79	0.29	0.50	0.00	0.67	0.76	0.00	0.54
Avail Cap(c_a), veh/h	243	1122	1167	311	2234	999	132	0	117	549	0	245
HCM Platoon Ratio	2.00	2.00	2.00	1.33	1.33	1.33	1.00	1.00	1.00	1.00	1.00	1.00
Upstream Filter(I)	1.00	1.00	1.00	0.71	0.71	0.71	1.00	0.00	1.00	1.00	0.00	1.00
Uniform Delay (d), s/veh	11.7	0.0	0.0	6.6	5.1	3.4	59.6	0.0	60.3	56.2	0.0	54.6
Incr Delay (d2), s/veh	0.5	5.4	5.4	0.1	2.1	0.5	1.3	0.0	7.0	4.1	0.0	2.4
Initial Q Delay(d3),s/veh	0.0	0.0	0.0	0.0	0.0	0.0	0.0	0.0	0.0	0.0	0.0	0.0
%ile BackOfQ(50%),veh/ln	1.2	1.7	1.7	0.7	13.8	2.0	2.0	0.0	2.5	5.7	0.0	3.5
LnGrp Delay(d),s/veh	12.2	5.4	5.4	6.7	7.2	3.9	60.9	0.0	67.3	60.3	0.0	57.0
LnGrp LOS	B	A	A	A	A	A	E		E	E		E
Approach Vol, veh/h		1878			2113			122			408	
Approach Delay, s/veh		5.7			6.8			64.4			59.5	
Approach LOS		A			A			E			E	

Timer	1	2	3	4	5	6	7	8
Assigned Phs	1	2		4	5	6		8
Phs Duration (G+Y+Rc), s	9.6	98.2		19.7	10.0	97.8		12.5
Change Period (Y+Rc), s	* 5.1999998	* 6		* 5.1999998	* 5.1999998	* 6		5.0
Max Green Setting (Gmax), s	* 5.8000002	* 84		* 19.799999	* 6.8000002	* 83		9.0
Max Q Clear Time (g_c+I1), s	3.5	2.0		13.5	4.2	31.1		7.5
Green Ext Time (p_c), s	0.0	79.1		1.0	0.0	50.7		0.0

Intersection Summary	
HCM 2010 Ctrl Delay	12.6
HCM 2010 LOS	B

Notes

User approved pedestrian interval to be less than phase max green.

User approved volume balancing among the lanes for turning movement.

* HCM 2010 computational engine requires equal clearance times for the phases crossing the barrier.

Movement	EBL	EBT	EBR	WBL	WBT	WBR	NBL	NBT	NBR	SBL	SBT	SBR
Lane Configurations												
Volume (veh/h)	0	1291	734	449	1725	0	0	0	0	108	0	327
Number	5	2	12	1	6	16				7	4	14
Initial Q (Qb), veh	0	0	0	0	0	0				0	0	0
Ped-Bike Adj(A_pbT)	1.00		1.00	1.00		1.00				1.00		1.00
Parking Bus, Adj	1.00	1.00	1.00	1.00	1.00	1.00				1.00	1.00	1.00
Adj Sat Flow, veh/h/ln	0.0	181.0	181.0	181.0	181.0	0.0				181.0	0.0	181.0
Adj Flow Rate, veh/h	0	1317	0	458	1760	0				110	0	334
Adj No. of Lanes	0	4	1	2	2	0				2	0	2
Peak Hour Factor	0.98	0.98	0.98	0.98	0.98	0.98				0.98	0.98	0.98
Percent Heavy Veh, %	0	5	5	5	5	0				5	0	5
Cap, veh/h	0	3473	858	693	2730	0				498	0	403
Arrive On Green	0.00	0.18	0.00	0.41	1.00	0.00				0.15	0.00	0.15
Sat Flow, veh/h	0	6478	1538	3343	3529	0				3343	0	2707
Grp Volume(v), veh/h	0	1317	0	458	1760	0				110	0	334
Grp Sat Flow(s),veh/h/ln	0	1556	1538	1672	1719	0				1672	0	1354
Q Serve(g_s), s	0.0	25.9	0.0	15.4	0.0	0.0				4.0	0.0	16.7
Cycle Q Clear(g_c), s	0.0	25.9	0.0	15.4	0.0	0.0				4.0	0.0	16.7
Prop In Lane	0.00		1.00	1.00		0.00				1.00		1.00
Lane Grp Cap(c), veh/h	0	3473	858	693	2730	0				498	0	403
V/C Ratio(X)	0.00	0.38	0.00	0.66	0.64	0.00				0.22	0.00	0.83
Avail Cap(c_a), veh/h	0	3473	858	693	2730	0				502	0	407
HCM Platoon Ratio	1.00	0.33	0.33	2.00	2.00	1.00				1.00	1.00	1.00
Upstream Filter(I)	0.00	0.54	0.00	0.75	0.75	0.00				1.00	0.00	1.00
Uniform Delay (d), s/veh	0.0	35.8	0.0	36.9	0.0	0.0				52.4	0.0	57.8
Incr Delay (d2), s/veh	0.0	0.2	0.0	2.4	0.9	0.0				0.2	0.0	13.3
Initial Q Delay(d3),s/veh	0.0	0.0	0.0	0.0	0.0	0.0				0.0	0.0	0.0
%ile BackOfQ(50%),veh/ln	0.0	11.2	0.0	7.2	0.3	0.0				1.9	0.0	7.0
LnGrp Delay(d),s/veh	0.0	36.0	0.0	39.3	0.9	0.0				52.6	0.0	71.1
LnGrp LOS		D		D	A					D		E
Approach Vol, veh/h		1317			2218						444	
Approach Delay, s/veh		36.0			8.8						66.5	
Approach LOS		D			A						E	

Timer	1	2	3	4	5	6	7	8
Assigned Phs	1	2		4		6		
Phs Duration (G+Y+Rc), s	33.2	82.0		24.8		115.2		
Change Period (Y+Rc), s	7.5	6.5		6.0		7.5		
Max Green Setting (Gmax), s	25.5	75.5		19.0		107.5		
Max Q Clear Time (g_c+I1), s	17.4	27.9		18.7		2.0		
Green Ext Time (p_c), s	7.1	12.5		0.1		43.7		

Intersection Summary	
HCM 2010 Ctrl Delay	24.2
HCM 2010 LOS	C

Movement	EBL	EBT	EBR	WBL	WBT	WBR	NBL	NBT	NBR	SBL	SBT	SBR
Lane Configurations												
Volume (veh/h)	340	1056	0	0	1286	123	885	0	516	0	0	0
Number	5	2	12	1	6	16	3	8	18			
Initial Q (Qb), veh	0	0	0	0	0	0	0	0	0			
Ped-Bike Adj(A_pbT)	1.00		1.00	1.00		1.00	1.00		1.00			
Parking Bus, Adj	1.00	1.00	1.00	1.00	1.00	1.00	1.00	1.00	1.00			
Adj Sat Flow, veh/h/ln	181.0	181.0	0.0	0.0	181.0	181.0	181.0	0.0	181.0			
Adj Flow Rate, veh/h	343	1067	0	0	1299	0	894	0	521			
Adj No. of Lanes	2	2	0	0	4	1	2	0	2			
Peak Hour Factor	0.99	0.99	0.99	0.99	0.99	0.99	0.99	0.99	0.99			
Percent Heavy Veh, %	5	5	0	0	5	5	5	0	5			
Cap, veh/h	476	2046	0	0	2617	647	1123	0	909			
Arrive On Green	0.14	0.59	0.00	0.00	0.42	0.00	0.34	0.00	0.34			
Sat Flow, veh/h	3343	3529	0	0	6478	1538	3343	0	2707			
Grp Volume(v), veh/h	343	1067	0	0	1299	0	894	0	521			
Grp Sat Flow(s),veh/h/ln	1672	1719	0	0	1556	1538	1672	0	1354			
Q Serve(g_s), s	12.2	22.7	0.0	0.0	19.0	0.0	30.1	0.0	19.7			
Cycle Q Clear(g_c), s	12.2	22.7	0.0	0.0	19.0	0.0	30.1	0.0	19.7			
Prop In Lane	1.00		0.00	0.00		1.00	1.00		1.00			
Lane Grp Cap(c), veh/h	476	2046	0	0	2617	647	1123	0	909			
V/C Ratio(X)	0.72	0.52	0.00	0.00	0.50	0.00	0.80	0.00	0.57			
Avail Cap(c_a), veh/h	672	2046	0	0	2617	647	1543	0	1249			
HCM Platoon Ratio	1.00	1.00	1.00	1.00	1.00	1.00	1.00	1.00	1.00			
Upstream Filter(I)	0.94	0.94	0.00	0.00	1.00	0.00	1.00	0.00	1.00			
Uniform Delay (d), s/veh	51.0	14.8	0.0	0.0	26.4	0.0	37.4	0.0	34.0			
Incr Delay (d2), s/veh	2.1	0.9	0.0	0.0	0.7	0.0	2.1	0.0	0.6			
Initial Q Delay(d3),s/veh	0.0	0.0	0.0	0.0	0.0	0.0	0.0	0.0	0.0			
%ile BackOfQ(50%),veh/ln	5.8	10.9	0.0	0.0	8.2	0.0	14.2	0.0	7.5			
LnGrp Delay(d),s/veh	53.1	15.7	0.0	0.0	27.1	0.0	39.5	0.0	34.5			
LnGrp LOS	D	B			C		D		C			
Approach Vol, veh/h		1410			1299			1415				
Approach Delay, s/veh		24.8			27.1			37.7				
Approach LOS		C			C			D				

Timer	1	2	3	4	5	6	7	8
Assigned Phs		2			5	6		8
Phs Duration (G+Y+Rc), s		93.6			21.7	71.9		46.4
Change Period (Y+Rc), s		6.4			6.6	6.4		6.6
Max Green Setting (Gmax), s		71.6			22.4	42.6		55.4
Max Q Clear Time (g_c+I1), s		24.7			14.2	21.0		32.1
Green Ext Time (p_c), s		36.0			0.9	18.8		7.6

Intersection Summary	
HCM 2010 Ctrl Delay	29.9
HCM 2010 LOS	C

Movement	EBL	EBT	EBR	WBL	WBT	WBR	NBL	NBT	NBR	SBL	SBT	SBR
Lane Configurations												
Volume (veh/h)	90	869	201	285	1229	418	538	653	523	471	403	113
Number	5	2	12	1	6	16	3	8	18	7	4	14
Initial Q (Qb), veh	0	0	0	0	0	0	0	0	0	0	0	0
Ped-Bike Adj(A_pbT)	1.00		1.00	1.00		1.00	1.00		1.00	1.00		1.00
Parking Bus, Adj	1.00	1.00	1.00	1.00	1.00	1.00	1.00	1.00	1.00	1.00	1.00	1.00
Adj Sat Flow, veh/h/ln	182.7	182.7	182.7	182.7	182.7	182.7	182.7	182.7	182.7	182.7	182.7	190.0
Adj Flow Rate, veh/h	91	878	0	288	1241	0	543	660	0	476	407	0
Adj No. of Lanes	1	2	1	1	2	1	2	2	1	2	2	0
Peak Hour Factor	0.99	0.99	0.99	0.99	0.99	0.99	0.99	0.99	0.99	0.99	0.99	0.99
Percent Heavy Veh, %	4	4	4	4	4	4	4	4	4	4	4	4
Cap, veh/h	258	1218	515	365	1497	640	629	793	355	551	713	0
Arrive On Green	0.05	0.35	0.00	0.27	0.86	0.00	0.19	0.23	0.00	0.16	0.21	0.00
Sat Flow, veh/h	1740	3471	1553	1740	3471	1553	3375	3471	1553	3375	3563	0
Grp Volume(v), veh/h	91	878	0	288	1241	0	543	660	0	476	407	0
Grp Sat Flow(s),veh/h/ln	1740	1736	1553	1740	1736	1553	1688	1736	1553	1688	1736	0
Q Serve(g_s), s	4.3	28.5	0.0	13.8	22.4	0.0	20.3	23.5	0.0	17.8	13.7	0.0
Cycle Q Clear(g_c), s	4.3	28.5	0.0	13.8	22.4	0.0	20.3	23.5	0.0	17.8	13.7	0.0
Prop In Lane	1.00		1.00	1.00		1.00	1.00		1.00	1.00		0.00
Lane Grp Cap(c), veh/h	258	1218	515	365	1497	640	629	793	355	551	713	0
V/C Ratio(X)	0.35	0.72	0.00	0.79	0.83	0.00	0.86	0.83	0.00	0.86	0.57	0.00
Avail Cap(c_a), veh/h	258	1218	515	413	1497	640	728	1042	466	572	882	0
HCM Platoon Ratio	1.00	1.00	1.00	2.00	2.00	2.00	1.00	1.00	1.00	1.00	1.00	1.00
Upstream Filter(I)	1.00	1.00	0.00	1.00	1.00	0.00	1.00	1.00	0.00	1.00	1.00	0.00
Uniform Delay (d), s/veh	25.8	36.6	0.0	22.1	6.6	0.0	51.2	47.7	0.0	52.9	46.5	0.0
Incr Delay (d2), s/veh	0.3	3.7	0.0	7.6	5.4	0.0	8.4	3.5	0.0	12.0	0.3	0.0
Initial Q Delay(d3),s/veh	0.0	0.0	0.0	0.0	0.0	0.0	0.0	0.0	0.0	0.0	0.0	0.0
%ile BackOfQ(50%),veh/ln	2.1	14.3	0.0	7.2	10.8	0.0	10.2	11.7	0.0	9.2	6.6	0.0
LnGrp Delay(d),s/veh	26.1	40.3	0.0	29.7	12.1	0.0	59.7	51.2	0.0	64.9	46.7	0.0
LnGrp LOS	C	D		C	B		E	D		E	D	
Approach Vol, veh/h		969			1529			1203			883	
Approach Delay, s/veh		39.0			15.4			55.0			56.5	
Approach LOS		D			B			E			E	

Timer	1	2	3	4	5	6	7	8
Assigned Phs	1	2	3	4	5	6	7	8
Phs Duration (G+Y+Rc), s	21.4	59.7	28.2	30.7	11.0	70.1	25.2	33.7
Change Period (Y+Rc), s	5.4	6.5*	5.1999998	5.6*	5.1999998	6.5*	5.1999998	5.6
Max Green Setting (Gmax), s	19.6	39.5*	26.799999	31.4*	5.8000002	53.5*	20.799999	37.4
Max Q Clear Time (g_c+I1), s	15.8	30.5	22.3	15.7	6.3	24.4	19.8	25.5
Green Ext Time (p_c), s	0.2	8.1	0.8	2.8	0.0	22.9	0.2	2.5

Intersection Summary	
HCM 2010 Ctrl Delay	38.7
HCM 2010 LOS	D

Notes

* HCM 2010 computational engine requires equal clearance times for the phases crossing the barrier.

Movement	EBL	EBT	EBR	WBL	WBT	WBR	NBL	NBT	NBR	SBL	SBT	SBR
Lane Configurations												
Volume (veh/h)	57	1804	11	50	1834	329	28	15	125	373	14	40
Number	5	2	12	1	6	16	3	8	18	7	4	14
Initial Q (Qb), veh	0	0	0	0	0	0	0	0	0	0	0	0
Ped-Bike Adj(A_pbT)	1.00		1.00	1.00		1.00	1.00		1.00	1.00		1.00
Parking Bus, Adj	1.00	1.00	1.00	1.00	1.00	1.00	1.00	1.00	1.00	1.00	1.00	1.00
Adj Sat Flow, veh/h/ln	182.7	182.7	190.0	182.7	182.7	182.7	190.0	182.7	182.7	182.7	182.7	182.7
Adj Flow Rate, veh/h	59	1860	11	52	1891	339	29	15	129	395	0	41
Adj No. of Lanes	1	2	0	1	2	1	0	1	1	2	0	1
Peak Hour Factor	0.97	0.97	0.97	0.97	0.97	0.97	0.97	0.97	0.97	0.97	0.97	0.97
Percent Heavy Veh, %	4	4	4	4	4	4	4	4	4	4	4	4
Cap, veh/h	175	2223	13	203	2176	974	86	44	115	485	0	217
Arrive On Green	0.06	0.84	0.82	0.05	0.83	0.83	0.07	0.07	0.07	0.14	0.00	0.14
Sat Flow, veh/h	1740	3538	21	1740	3471	1553	1166	603	1553	3480	0	1553
Grp Volume(v), veh/h	59	912	959	52	1891	339	44	0	129	395	0	41
Grp Sat Flow(s),veh/h/ln	1740	1736	1823	1740	1736	1553	1769	0	1553	1740	0	1553
Q Serve(g_s), s	1.6	38.9	39.1	1.4	44.5	6.9	3.2	0.0	10.0	14.9	0.0	3.2
Cycle Q Clear(g_c), s	1.6	38.9	39.1	1.4	44.5	6.9	3.2	0.0	10.0	14.9	0.0	3.2
Prop In Lane	1.00		0.01	1.00		1.00	0.66		1.00	1.00		1.00
Lane Grp Cap(c), veh/h	175	1090	1145	203	2176	974	130	0	115	485	0	217
V/C Ratio(X)	0.34	0.84	0.84	0.26	0.87	0.35	0.34	0.00	1.13	0.81	0.00	0.19
Avail Cap(c_a), veh/h	192	1090	1145	223	2176	974	130	0	115	565	0	252
HCM Platoon Ratio	1.33	1.33	1.33	1.33	1.33	1.33	1.00	1.00	1.00	1.00	1.00	1.00
Upstream Filter(I)	1.00	1.00	1.00	0.61	0.61	0.61	1.00	0.00	1.00	1.00	0.00	1.00
Uniform Delay (d), s/veh	18.9	7.3	7.4	14.9	7.9	4.8	59.6	0.0	62.8	56.6	0.0	51.6
Incr Delay (d2), s/veh	0.4	7.6	7.4	0.1	3.2	0.6	0.6	0.0	122.0	7.8	0.0	0.4
Initial Q Delay(d3),s/veh	0.0	0.0	0.0	0.0	0.0	0.0	0.0	0.0	0.0	0.0	0.0	0.0
%ile BackOfQ(50%),veh/ln	1.1	20.3	21.2	0.7	21.3	3.1	1.6	0.0	8.2	7.7	0.0	1.4
LnGrp Delay(d),s/veh	19.3	15.0	14.7	15.1	11.1	5.4	60.2	0.0	184.8	64.5	0.0	52.0
LnGrp LOS	B	B	B	B	B	A	E		F	E		D
Approach Vol, veh/h		1930			2282			173			436	
Approach Delay, s/veh		15.0			10.3			153.1			63.3	
Approach LOS		B			B			F			E	

Timer	1	2	3	4	5	6	7	8
Assigned Phs	1	2		4	5	6		8
Phs Duration (G+Y+Rc), s	9.5	93.6		22.9	9.7	93.4		14.0
Change Period (Y+Rc), s	* 5.1999998	* 6		* 5.1999998	* 5.1999998	* 6		5.0
Max Green Setting (Gmax), s	* 5.8000002	* 83		* 20.799999	* 5.8000002	* 83		9.0
Max Q Clear Time (g_c+I1), s	3.4	41.1		16.9	3.6	46.5		12.0
Green Ext Time (p_c), s	0.0	41.4		0.8	0.0	36.1		0.0

Intersection Summary	
HCM 2010 Ctrl Delay	22.1
HCM 2010 LOS	C

Notes

User approved pedestrian interval to be less than phase max green.

User approved volume balancing among the lanes for turning movement.

* HCM 2010 computational engine requires equal clearance times for the phases crossing the barrier.

Movement	EBL	EBT	EBR	WBL	WBT	WBR	NBL	NBT	NBR	SBL	SBT	SBR
Lane Configurations												
Volume (veh/h)	0	1158	1137	1136	1886	0	0	0	0	127	0	332
Number	5	2	12	1	6	16				7	4	14
Initial Q (Qb), veh	0	0	0	0	0	0				0	0	0
Ped-Bike Adj(A_pbT)	1.00		1.00	1.00		1.00				1.00		1.00
Parking Bus, Adj	1.00	1.00	1.00	1.00	1.00	1.00				1.00	1.00	1.00
Adj Sat Flow, veh/h/ln	0.0	182.7	184.5	184.5	182.7	0.0				184.5	0.0	184.5
Adj Flow Rate, veh/h	0	1206	0	1183	1965	0				132	0	346
Adj No. of Lanes	0	4	1	2	2	0				2	0	2
Peak Hour Factor	0.96	0.96	0.96	0.96	0.96	0.96				0.96	0.96	0.96
Percent Heavy Veh, %	0	4	3	3	4	0				3	0	3
Cap, veh/h	0	3457	862	974	3000	0				268	0	217
Arrive On Green	0.00	0.37	0.00	0.57	1.00	0.00				0.08	0.00	0.08
Sat Flow, veh/h	0	6540	1568	3408	3563	0				3408	0	2760
Grp Volume(v), veh/h	0	1206	0	1183	1965	0				132	0	346
Grp Sat Flow(s),veh/h/ln	0	1571	1568	1704	1736	0				1704	0	1380
Q Serve(g_s), s	0.0	19.5	0.0	40.0	0.0	0.0				5.2	0.0	11.0
Cycle Q Clear(g_c), s	0.0	19.5	0.0	40.0	0.0	0.0				5.2	0.0	11.0
Prop In Lane	0.00		1.00	1.00		0.00				1.00		1.00
Lane Grp Cap(c), veh/h	0	3457	862	974	3000	0				268	0	217
V/C Ratio(X)	0.00	0.35	0.00	1.21	0.65	0.00				0.49	0.00	1.60
Avail Cap(c_a), veh/h	0	3457	862	974	3000	0				268	0	217
HCM Platoon Ratio	1.00	0.67	0.67	2.00	2.00	1.00				1.00	1.00	1.00
Upstream Filter(I)	0.00	0.46	0.00	0.35	0.35	0.00				1.00	0.00	1.00
Uniform Delay (d), s/veh	0.0	26.0	0.0	30.0	0.0	0.0				61.8	0.0	64.5
Incr Delay (d2), s/veh	0.0	0.1	0.0	100.2	0.4	0.0				1.4	0.0	288.7
Initial Q Delay(d3),s/veh	0.0	0.0	0.0	0.0	0.0	0.0				0.0	0.0	0.0
%ile BackOfQ(50%),veh/ln	0.0	8.5	0.0	31.9	0.2	0.0				2.5	0.0	12.9
LnGrp Delay(d),s/veh	0.0	26.2	0.0	130.2	0.4	0.0				63.2	0.0	353.2
LnGrp LOS		C		F	A					E		F
Approach Vol, veh/h		1206			3148						478	
Approach Delay, s/veh		26.2			49.2						273.1	
Approach LOS		C			D						F	

Timer	1	2	3	4	5	6	7	8
Assigned Phs	1	2		4		6		
Phs Duration (G+Y+Rc), s	44.0	81.0		15.0		125.0		
Change Period (Y+Rc), s	7.5	6.5		6.0		7.5		
Max Green Setting (Gmax), s	36.5	74.5		9.0		117.5		
Max Q Clear Time (g_c+I1), s	42.0	21.5		13.0		2.0		
Green Ext Time (p_c), s	0.0	11.1		0.0		88.6		

Intersection Summary	
HCM 2010 Ctrl Delay	65.6
HCM 2010 LOS	E

Movement	EBL	EBT	EBR	WBL	WBT	WBR	NBL	NBT	NBR	SBL	SBT	SBR
Lane Configurations												
Volume (veh/h)	442	846	0	0	2034	292	996	0	533	0	0	0
Number	5	2	12	1	6	16	3	8	18			
Initial Q (Qb), veh	0	0	0	0	0	0	0	0	0			
Ped-Bike Adj(A_pbT)	1.00		1.00	1.00		1.00	1.00		1.00			
Parking Bus, Adj	1.00	1.00	1.00	1.00	1.00	1.00	1.00	1.00	1.00			
Adj Sat Flow, veh/h/ln	184.5	182.7	0.0	0.0	182.7	184.5	184.5	0.0	184.5			
Adj Flow Rate, veh/h	475	910	0	0	2187	0	1071	0	573			
Adj No. of Lanes	2	2	0	0	4	1	2	0	2			
Peak Hour Factor	0.93	0.93	0.93	0.93	0.93	0.93	0.93	0.93	0.93			
Percent Heavy Veh, %	3	4	0	0	4	3	3	0	3			
Cap, veh/h	565	2050	0	0	2490	621	1184	0	959			
Arrive On Green	0.05	0.19	0.00	0.00	0.40	0.00	0.35	0.00	0.35			
Sat Flow, veh/h	3408	3563	0	0	6540	1568	3408	0	2760			
Grp Volume(v), veh/h	475	910	0	0	2187	0	1071	0	573			
Grp Sat Flow(s),veh/h/ln	1704	1736	0	0	1571	1568	1704	0	1380			
Q Serve(g_s), s	19.2	32.1	0.0	0.0	44.7	0.0	41.5	0.0	23.7			
Cycle Q Clear(g_c), s	19.2	32.1	0.0	0.0	44.7	0.0	41.5	0.0	23.7			
Prop In Lane	1.00		0.00	0.00		1.00	1.00		1.00			
Lane Grp Cap(c), veh/h	565	2050	0	0	2490	621	1184	0	959			
V/C Ratio(X)	0.84	0.44	0.00	0.00	0.88	0.00	0.90	0.00	0.60			
Avail Cap(c_a), veh/h	565	2050	0	0	2490	621	1213	0	982			
HCM Platoon Ratio	0.33	0.33	1.00	1.00	1.00	1.00	1.00	1.00	1.00			
Upstream Filter(I)	0.94	0.94	0.00	0.00	1.00	0.00	1.00	0.00	1.00			
Uniform Delay (d), s/veh	63.8	35.8	0.0	0.0	38.8	0.0	43.1	0.0	37.3			
Incr Delay (d2), s/veh	10.4	0.7	0.0	0.0	4.8	0.0	9.6	0.0	1.0			
Initial Q Delay(d3),s/veh	0.0	0.0	0.0	0.0	0.0	0.0	0.0	0.0	0.0			
%ile BackOfQ(50%),veh/ln	9.9	15.6	0.0	0.0	20.3	0.0	21.1	0.0	9.2			
LnGrp Delay(d),s/veh	74.2	36.4	0.0	0.0	43.6	0.0	52.7	0.0	38.3			
LnGrp LOS	E	D			D		D		D			
Approach Vol, veh/h		1385			2187			1644				
Approach Delay, s/veh		49.4			43.6			47.7				
Approach LOS		D			D			D				

Timer	1	2	3	4	5	6	7	8
Assigned Phs		2			5	6		8
Phs Duration (G+Y+Rc), s		87.2			27.0	60.2		52.8
Change Period (Y+Rc), s		6.4			6.6	6.4		6.6
Max Green Setting (Gmax), s		79.6			20.4	52.6		47.4
Max Q Clear Time (g_c+I1), s		34.1			21.2	46.7		43.5
Green Ext Time (p_c), s		42.2			0.0	5.8		2.7

Intersection Summary	
HCM 2010 Ctrl Delay	46.4
HCM 2010 LOS	D

Movement	EBL	EBT	EBR	WBL	WBT	WBR	NBL	NBT	NBR	SBL	SBT	SBR
Lane Configurations												
Volume (veh/h)	144	917	328	679	754	482	254	416	330	375	688	73
Number	5	2	12	1	6	16	3	8	18	7	4	14
Initial Q (Qb), veh	0	0	0	0	0	0	0	0	0	0	0	0
Ped-Bike Adj(A_pbT)	1.00		1.00	1.00		1.00	1.00		1.00	1.00		1.00
Parking Bus, Adj	1.00	1.00	1.00	1.00	1.00	1.00	1.00	1.00	1.00	1.00	1.00	1.00
Adj Sat Flow, veh/h/ln	181.0	181.0	181.0	181.0	181.0	181.0	181.0	181.0	181.0	181.0	181.0	190.0
Adj Flow Rate, veh/h	150	955	0	707	785	0	265	433	0	391	717	0
Adj No. of Lanes	1	2	1	1	2	1	2	2	1	2	2	0
Peak Hour Factor	0.96	0.96	0.96	0.96	0.96	0.96	0.96	0.96	0.96	0.96	0.96	0.96
Percent Heavy Veh, %	5	5	5	5	5	5	5	5	5	5	5	5
Cap, veh/h	357	904	375	625	1777	765	231	550	246	411	735	0
Arrive On Green	0.08	0.26	0.00	0.44	0.69	0.00	0.07	0.16	0.00	0.12	0.21	0.00
Sat Flow, veh/h	1723	3438	1538	1723	3438	1538	3343	3438	1538	3343	3529	0
Grp Volume(v), veh/h	150	955	0	707	785	0	265	433	0	391	717	0
Grp Sat Flow(s),veh/h/ln	1723	1719	1538	1723	1719	1538	1672	1719	1538	1672	1719	0
Q Serve(g_s), s	8.3	34.2	0.0	43.0	13.3	0.0	9.0	15.7	0.0	15.1	26.9	0.0
Cycle Q Clear(g_c), s	8.3	34.2	0.0	43.0	13.3	0.0	9.0	15.7	0.0	15.1	26.9	0.0
Prop In Lane	1.00		1.00	1.00		1.00	1.00		1.00	1.00		0.00
Lane Grp Cap(c), veh/h	357	904	375	625	1777	765	231	550	246	411	735	0
V/C Ratio(X)	0.42	1.06	0.00	1.13	0.44	0.00	1.14	0.79	0.00	0.95	0.98	0.00
Avail Cap(c_a), veh/h	357	904	375	625	1777	765	231	550	246	411	735	0
HCM Platoon Ratio	1.00	1.00	1.00	1.33	1.33	1.33	1.00	1.00	1.00	1.00	1.00	1.00
Upstream Filter(I)	1.00	1.00	0.00	1.00	1.00	0.00	1.00	1.00	0.00	1.00	1.00	0.00
Uniform Delay (d), s/veh	32.0	47.9	0.0	29.9	11.9	0.0	60.5	52.5	0.0	56.6	50.8	0.0
Incr Delay (d2), s/veh	0.3	45.8	0.0	77.6	0.8	0.0	103.8	6.9	0.0	31.5	26.9	0.0
Initial Q Delay(d3),s/veh	0.0	0.0	0.0	0.0	0.0	0.0	0.0	0.0	0.0	0.0	0.0	0.0
%ile BackOfQ(50%),veh/ln	4.0	22.0	0.0	35.8	6.4	0.0	7.5	8.0	0.0	8.8	15.5	0.0
LnGrp Delay(d),s/veh	32.3	93.7	0.0	107.5	12.7	0.0	164.3	59.3	0.0	88.1	77.7	0.0
LnGrp LOS	C	F		F	B		F	E		F	E	
Approach Vol, veh/h		1105			1492			698			1108	
Approach Delay, s/veh		85.3			57.6			99.2			81.4	
Approach LOS		F			E			F			F	

Timer	1	2	3	4	5	6	7	8
Assigned Phs	1	2	3	4	5	6	7	8
Phs Duration (G+Y+Rc), s	47.0	38.2	13.0	31.8	14.0	71.2	20.0	24.8
Change Period (Y+Rc), s	5.4	6.5*	5.1999998	5.6*	5.1999998	6.5*	5.1999998	5.6
Max Green Setting (Gmax), s	41.6	31.7*	7.8000002	26.2*	8.8000002	64.7	* 14.8	19.2
Max Q Clear Time (g_c+I1), s	45.0	36.2	11.0	28.9	10.3	15.3	17.1	17.7
Green Ext Time (p_c), s	0.0	0.0	0.0	0.0	0.0	26.4	0.0	0.7

Intersection Summary	
HCM 2010 Ctrl Delay	77.1
HCM 2010 LOS	E

Notes

* HCM 2010 computational engine requires equal clearance times for the phases crossing the barrier.

Movement	EBL	EBT	EBR	WBL	WBT	WBR	NBL	NBT	NBR	SBL	SBT	SBR
Lane Configurations												
Volume (veh/h)	50	1504	44	150	1870	358	18	2	26	192	19	24
Number	5	2	12	1	6	16	3	8	18	7	4	14
Initial Q (Qb), veh	0	0	0	0	0	0	0	0	0	0	0	0
Ped-Bike Adj(A_pbT)	1.00		1.00	1.00		1.00	1.00		1.00	1.00		1.00
Parking Bus, Adj	1.00	1.00	1.00	1.00	1.00	1.00	1.00	1.00	1.00	1.00	1.00	1.00
Adj Sat Flow, veh/h/ln	181.0	181.0	190.0	181.0	181.0	181.0	190.0	181.0	181.0	181.0	181.0	181.0
Adj Flow Rate, veh/h	52	1567	46	156	1948	373	19	2	27	214	0	25
Adj No. of Lanes	1	2	0	1	2	1	0	1	1	2	0	1
Peak Hour Factor	0.96	0.96	0.96	0.96	0.96	0.96	0.96	0.96	0.96	0.96	0.96	0.96
Percent Heavy Veh, %	5	5	5	5	5	5	5	5	5	5	5	5
Cap, veh/h	166	2325	68	324	2377	1063	65	7	64	309	0	138
Arrive On Green	0.06	0.91	0.88	0.04	0.46	0.46	0.04	0.04	0.04	0.09	0.00	0.09
Sat Flow, veh/h	1723	3411	100	1723	3438	1538	1566	165	1538	3447	0	1538
Grp Volume(v), veh/h	52	788	825	156	1948	373	21	0	27	214	0	25
Grp Sat Flow(s),veh/h/ln	1723	1719	1792	1723	1719	1538	1731	0	1538	1723	0	1538
Q Serve(g_s), s	1.0	13.2	13.5	3.2	58.9	18.7	1.4	0.0	2.1	7.2	0.0	1.8
Cycle Q Clear(g_c), s	1.0	13.2	13.5	3.2	58.9	18.7	1.4	0.0	2.1	7.2	0.0	1.8
Prop In Lane	1.00		0.06	1.00		1.00	0.90		1.00	1.00		1.00
Lane Grp Cap(c), veh/h	166	1171	1221	324	2377	1063	72	0	64	309	0	138
V/C Ratio(X)	0.31	0.67	0.68	0.48	0.82	0.35	0.29	0.00	0.42	0.69	0.00	0.18
Avail Cap(c_a), veh/h	190	1171	1221	403	2377	1063	144	0	128	402	0	179
HCM Platoon Ratio	1.33	1.33	1.33	0.67	0.67	0.67	1.00	1.00	1.00	1.00	1.00	1.00
Upstream Filter(I)	1.00	1.00	1.00	0.50	0.50	0.50	1.00	0.00	1.00	1.00	0.00	1.00
Uniform Delay (d), s/veh	25.1	2.4	2.5	6.6	25.8	15.0	55.8	0.0	56.1	53.0	0.0	50.6
Incr Delay (d2), s/veh	0.4	3.1	3.0	0.2	1.7	0.5	0.8	0.0	1.6	3.4	0.0	0.6
Initial Q Delay(d3),s/veh	0.0	0.0	0.0	0.0	0.0	0.0	0.0	0.0	0.0	0.0	0.0	0.0
%ile BackOfQ(50%),veh/ln	1.2	6.6	7.2	1.5	28.5	8.1	0.7	0.0	0.9	3.6	0.0	0.8
LnGrp Delay(d),s/veh	25.5	5.5	5.5	6.8	27.5	15.4	56.6	0.0	57.8	56.5	0.0	51.2
LnGrp LOS	C	A	A	A	C	B	E		E	E		D
Approach Vol, veh/h		1665			2477			48			239	
Approach Delay, s/veh		6.1			24.3			57.3			55.9	
Approach LOS		A			C			E			E	

Timer	1	2	3	4	5	6	7	8
Assigned Phs	1	2		4	5	6		8
Phs Duration (G+Y+Rc), s	10.5	95.8		14.8	9.3	96.9		9.0
Change Period (Y+Rc), s	* 5.1999998	* 6		* 5.1999998	* 5.1999998	* 6		5.0
Max Green Setting (Gmax), s	* 10.8	* 76		* 12.8	* 5.8000002	* 81		9.0
Max Q Clear Time (g_c+I1), s	5.2	15.5		9.2	3.0	60.9		4.1
Green Ext Time (p_c), s	0.1	59.1		0.3	0.0	20.0		0.0

Intersection Summary	
HCM 2010 Ctrl Delay	19.5
HCM 2010 LOS	B

Notes

User approved pedestrian interval to be less than phase max green.

User approved volume balancing among the lanes for turning movement.

* HCM 2010 computational engine requires equal clearance times for the phases crossing the barrier.

Movement	EBL	EBT	EBR	WBL	WBT	WBR	NBL	NBT	NBR	SBL	SBT	SBR
Lane Configurations												
Volume (veh/h)	0	1232	485	321	1688	0	0	0	0	628	0	695
Number	5	2	12	1	6	16				7	4	14
Initial Q (Qb), veh	0	0	0	0	0	0				0	0	0
Ped-Bike Adj(A_pbT)	1.00		1.00	1.00		1.00				1.00		1.00
Parking Bus, Adj	1.00	1.00	1.00	1.00	1.00	1.00				1.00	1.00	1.00
Adj Sat Flow, veh/h/ln	0.0	181.0	182.7	182.7	181.0	0.0				182.7	0.0	182.7
Adj Flow Rate, veh/h	0	1270	0	331	1740	0				647	0	716
Adj No. of Lanes	0	4	1	2	2	0				2	0	2
Peak Hour Factor	0.97	0.97	0.97	0.97	0.97	0.97				0.97	0.97	0.97
Percent Heavy Veh, %	0	5	4	4	5	0				4	0	4
Cap, veh/h	0	2750	686	529	2166	0				1036	0	839
Arrive On Green	0.00	0.15	0.00	0.31	1.00	0.00				0.31	0.00	0.31
Sat Flow, veh/h	0	6478	1553	3375	3529	0				3375	0	2733
Grp Volume(v), veh/h	0	1270	0	331	1740	0				647	0	716
Grp Sat Flow(s),veh/h/ln	0	1556	1553	1688	1719	0				1688	0	1367
Q Serve(g_s), s	0.0	23.7	0.0	10.6	0.0	0.0				20.9	0.0	31.2
Cycle Q Clear(g_c), s	0.0	23.7	0.0	10.6	0.0	0.0				20.9	0.0	31.2
Prop In Lane	0.00		1.00	1.00		0.00				1.00		1.00
Lane Grp Cap(c), veh/h	0	2750	686	529	2166	0				1036	0	839
V/C Ratio(X)	0.00	0.46	0.00	0.63	0.80	0.00				0.62	0.00	0.85
Avail Cap(c_a), veh/h	0	2750	686	529	2166	0				1116	0	904
HCM Platoon Ratio	1.00	0.33	0.33	2.00	2.00	1.00				1.00	1.00	1.00
Upstream Filter(I)	0.00	0.64	0.00	0.74	0.74	0.00				1.00	0.00	1.00
Uniform Delay (d), s/veh	0.0	40.4	0.0	40.4	0.0	0.0				37.7	0.0	41.3
Incr Delay (d2), s/veh	0.0	0.4	0.0	2.5	2.4	0.0				1.0	0.0	7.5
Initial Q Delay(d3),s/veh	0.0	0.0	0.0	0.0	0.0	0.0				0.0	0.0	0.0
%ile BackOfQ(50%),veh/ln	0.0	10.3	0.0	5.1	0.7	0.0				9.8	0.0	12.6
LnGrp Delay(d),s/veh	0.0	40.8	0.0	42.9	2.4	0.0				38.7	0.0	48.9
LnGrp LOS		D		D	A					D		D
Approach Vol, veh/h		1270			2071						1363	
Approach Delay, s/veh		40.8			8.9						44.0	
Approach LOS		D			A						D	

Timer	1	2	3	4	5	6	7	8
Assigned Phs	1	2		4		6		
Phs Duration (G+Y+Rc), s	26.9	60.1		43.0		87.0		
Change Period (Y+Rc), s	7.5	6.5		6.0		7.5		
Max Green Setting (Gmax), s	16.4	53.6		40.0		76.5		
Max Q Clear Time (g_c+I1), s	12.6	25.7		33.2		2.0		
Green Ext Time (p_c), s	3.4	10.3		3.8		33.7		

Intersection Summary	
HCM 2010 Ctrl Delay	27.7
HCM 2010 LOS	C

Movement	EBL	EBT	EBR	WBL	WBT	WBR	NBL	NBT	NBR	SBL	SBT	SBR
Lane Configurations												
Volume (veh/h)	302	1563	0	0	909	78	1102	0	1166	0	0	0
Number	5	2	12	1	6	16	3	8	18			
Initial Q (Qb), veh	0	0	0	0	0	0	0	0	0			
Ped-Bike Adj(A_pbT)	1.00		1.00	1.00		1.00	1.00		1.00			
Parking Bus, Adj	1.00	1.00	1.00	1.00	1.00	1.00	1.00	1.00	1.00			
Adj Sat Flow, veh/h/ln	182.7	181.0	0.0	0.0	181.0	182.7	182.7	0.0	182.7			
Adj Flow Rate, veh/h	311	1611	0	0	937	0	1136	0	1202			
Adj No. of Lanes	2	2	0	0	4	1	2	0	2			
Peak Hour Factor	0.97	0.97	0.97	0.97	0.97	0.97	0.97	0.97	0.97			
Percent Heavy Veh, %	4	5	0	0	5	4	4	0	4			
Cap, veh/h	415	1719	0	0	2156	538	1464	0	1186			
Arrive On Green	0.25	1.00	0.00	0.00	0.35	0.00	0.43	0.00	0.43			
Sat Flow, veh/h	3375	3529	0	0	6478	1553	3375	0	2733			
Grp Volume(v), veh/h	311	1611	0	0	937	0	1136	0	1202			
Grp Sat Flow(s),veh/h/ln	1688	1719	0	0	1556	1553	1688	0	1367			
Q Serve(g_s), s	11.1	0.0	0.0	0.0	15.1	0.0	37.3	0.0	56.4			
Cycle Q Clear(g_c), s	11.1	0.0	0.0	0.0	15.1	0.0	37.3	0.0	56.4			
Prop In Lane	1.00		0.00	0.00		1.00	1.00		1.00			
Lane Grp Cap(c), veh/h	415	1719	0	0	2156	538	1464	0	1186			
V/C Ratio(X)	0.75	0.94	0.00	0.00	0.43	0.00	0.78	0.00	1.01			
Avail Cap(c_a), veh/h	467	1719	0	0	2156	538	1464	0	1186			
HCM Platoon Ratio	2.00	2.00	1.00	1.00	1.00	1.00	1.00	1.00	1.00			
Upstream Filter(I)	0.85	0.85	0.00	0.00	1.00	0.00	1.00	0.00	1.00			
Uniform Delay (d), s/veh	47.2	0.0	0.0	0.0	32.7	0.0	31.4	0.0	36.8			
Incr Delay (d2), s/veh	5.0	9.8	0.0	0.0	0.6	0.0	2.7	0.0	29.6			
Initial Q Delay(d3),s/veh	0.0	0.0	0.0	0.0	0.0	0.0	0.0	0.0	0.0			
%ile BackOfQ(50%),veh/ln	5.4	2.3	0.0	0.0	6.5	0.0	17.9	0.0	26.1			
LnGrp Delay(d),s/veh	52.2	9.8	0.0	0.0	33.3	0.0	34.1	0.0	66.4			
LnGrp LOS	D	A			C		C		F			
Approach Vol, veh/h		1922			937			2338				
Approach Delay, s/veh		16.7			33.3			50.7				
Approach LOS		B			C			D				

Timer	1	2	3	4	5	6	7	8
Assigned Phs		2			5	6		8
Phs Duration (G+Y+Rc), s		69.0			20.0	49.0		61.0
Change Period (Y+Rc), s		6.4			6.6	6.4		6.6
Max Green Setting (Gmax), s		62.6			15.4	40.6		54.4
Max Q Clear Time (g_c+I1), s		2.0			13.1	17.1		58.4
Green Ext Time (p_c), s		48.1			0.3	21.3		0.0

Intersection Summary	
HCM 2010 Ctrl Delay	35.0
HCM 2010 LOS	C

HCM 2010 Signalized Intersection Summary
1: Westside Pkwy/Deerfield Pkwy & Windward Pkwy

10/15/2014

Movement	EBL	EBT	EBR	WBL	WBT	WBR	NBL	NBT	NBR	SBL	SBT	SBR
Lane Configurations												
Volume (veh/h)	167	1278	365	241	1353	327	391	312	244	331	313	227
Number	5	2	12	1	6	16	3	8	18	7	4	14
Initial Q (Qb), veh	0	0	0	0	0	0	0	0	0	0	0	0
Ped-Bike Adj(A_pbT)	1.00		1.00	1.00		1.00	1.00		1.00	1.00		1.00
Parking Bus, Adj	1.00	1.00	1.00	1.00	1.00	1.00	1.00	1.00	1.00	1.00	1.00	1.00
Adj Sat Flow, veh/h/ln	181.0	181.0	181.0	181.0	181.0	181.0	181.0	181.0	181.0	181.0	181.0	190.0
Adj Flow Rate, veh/h	170	1304	0	246	1381	0	399	318	0	338	319	0
Adj No. of Lanes	1	2	1	1	2	1	2	2	1	2	2	0
Peak Hour Factor	0.98	0.98	0.98	0.98	0.98	0.98	0.98	0.98	0.98	0.98	0.98	0.98
Percent Heavy Veh, %	5	5	5	5	5	5	5	5	5	5	5	5
Cap, veh/h	370	1743	750	306	1832	790	478	498	223	418	436	0
Arrive On Green	0.07	0.51	0.00	0.20	1.00	0.00	0.14	0.14	0.00	0.13	0.13	0.00
Sat Flow, veh/h	1723	3438	1538	1723	3438	1538	3343	3438	1538	3343	3529	0
Grp Volume(v), veh/h	170	1304	0	246	1381	0	399	318	0	338	319	0
Grp Sat Flow(s),veh/h/ln	1723	1719	1538	1723	1719	1538	1672	1719	1538	1672	1719	0
Q Serve(g_s), s	6.0	38.7	0.0	9.0	0.0	0.0	14.9	11.2	0.0	12.6	11.5	0.0
Cycle Q Clear(g_c), s	6.0	38.7	0.0	9.0	0.0	0.0	14.9	11.2	0.0	12.6	11.5	0.0
Prop In Lane	1.00		1.00	1.00		1.00	1.00		1.00	1.00		0.00
Lane Grp Cap(c), veh/h	370	1743	750	306	1832	790	478	498	223	418	436	0
V/C Ratio(X)	0.46	0.75	0.00	0.80	0.75	0.00	0.83	0.64	0.00	0.81	0.73	0.00
Avail Cap(c_a), veh/h	406	1743	750	392	1832	790	521	686	307	469	632	0
HCM Platoon Ratio	1.00	1.00	1.00	2.00	2.00	2.00	1.00	1.00	1.00	1.00	1.00	1.00
Upstream Filter(I)	1.00	1.00	0.00	1.00	1.00	0.00	1.00	1.00	0.00	1.00	1.00	0.00
Uniform Delay (d), s/veh	13.2	25.1	0.0	21.0	0.0	0.0	53.5	51.7	0.0	54.7	53.9	0.0
Incr Delay (d2), s/veh	0.3	3.0	0.0	7.0	2.9	0.0	9.6	0.5	0.0	8.1	1.0	0.0
Initial Q Delay(d3),s/veh	0.0	0.0	0.0	0.0	0.0	0.0	0.0	0.0	0.0	0.0	0.0	0.0
%ile BackOfQ(50%),veh/ln	2.9	19.0	0.0	4.7	0.7	0.0	7.5	5.3	0.0	6.3	5.5	0.0
LnGrp Delay(d),s/veh	13.5	28.1	0.0	28.1	2.9	0.0	63.1	52.2	0.0	62.7	54.9	0.0
LnGrp LOS	B	C		C	A		E	D		E	D	
Approach Vol, veh/h		1474			1627			717			657	
Approach Delay, s/veh		26.4			6.7			58.3			58.9	
Approach LOS		C			A			E			E	

Timer	1	2	3	4	5	6	7	8
Assigned Phs	1	2	3	4	5	6	7	8
Phs Duration (G+Y+Rc), s	16.6	80.7	22.4	20.3	13.3	84.0	20.1	22.6
Change Period (Y+Rc), s	5.4	6.5*	5.1999998	5.6*	5.1999998	6.5*	5.1999998	5.6
Max Green Setting (Gmax), s	17.6	58.9*	18.799999	22.0	* 10.8	65.9*	16.799999	24.0
Max Q Clear Time (g_c+I1), s	11.0	40.7	16.9	13.5	8.0	2.0	14.6	13.2
Green Ext Time (p_c), s	0.3	17.1	0.3	1.2	0.1	52.4	0.2	1.4

Intersection Summary	
HCM 2010 Ctrl Delay	29.1
HCM 2010 LOS	C

Notes

* HCM 2010 computational engine requires equal clearance times for the phases crossing the barrier.

Movement	EBL	EBT	EBR	WBL	WBT	WBR	NBL	NBT	NBR	SBL	SBT	SBR
Lane Configurations												
Volume (veh/h)	85	1689	62	57	1730	277	44	11	64	290	15	95
Number	5	2	12	1	6	16	3	8	18	7	4	14
Initial Q (Qb), veh	0	0	0	0	0	0	0	0	0	0	0	0
Ped-Bike Adj(A_pbT)	1.00		1.00	1.00		1.00	1.00		1.00	1.00		1.00
Parking Bus, Adj	1.00	1.00	1.00	1.00	1.00	1.00	1.00	1.00	1.00	1.00	1.00	1.00
Adj Sat Flow, veh/h/ln	181.0	181.0	190.0	181.0	181.0	181.0	190.0	181.0	181.0	181.0	181.0	181.0
Adj Flow Rate, veh/h	88	1741	64	59	1784	286	45	11	66	310	0	98
Adj No. of Lanes	1	2	0	1	2	1	0	1	1	2	0	1
Peak Hour Factor	0.97	0.97	0.97	0.97	0.97	0.97	0.97	0.97	0.97	0.97	0.97	0.97
Percent Heavy Veh, %	5	5	5	5	5	5	5	5	5	5	5	5
Cap, veh/h	258	2216	81	290	2243	1003	90	22	99	407	0	181
Arrive On Green	0.09	1.00	1.00	0.08	1.00	1.00	0.06	0.06	0.06	0.12	0.00	0.12
Sat Flow, veh/h	1723	3383	124	1723	3438	1538	1398	342	1538	3447	0	1538
Grp Volume(v), veh/h	88	881	924	59	1784	286	56	0	66	310	0	98
Grp Sat Flow(s),veh/h/ln	1723	1719	1788	1723	1719	1538	1740	0	1538	1723	0	1538
Q Serve(g_s), s	2.2	0.0	0.0	1.5	0.0	0.0	4.1	0.0	5.6	11.6	0.0	8.0
Cycle Q Clear(g_c), s	2.2	0.0	0.0	1.5	0.0	0.0	4.1	0.0	5.6	11.6	0.0	8.0
Prop In Lane	1.00		0.07	1.00		1.00	0.80		1.00	1.00		1.00
Lane Grp Cap(c), veh/h	258	1126	1171	290	2243	1003	111	0	99	407	0	181
V/C Ratio(X)	0.34	0.78	0.79	0.20	0.80	0.29	0.50	0.00	0.67	0.76	0.00	0.54
Avail Cap(c_a), veh/h	284	1126	1171	308	2243	1003	131	0	116	519	0	232
HCM Platoon Ratio	2.00	2.00	2.00	2.00	2.00	2.00	1.00	1.00	1.00	1.00	1.00	1.00
Upstream Filter(I)	1.00	1.00	1.00	0.71	0.71	0.71	1.00	0.00	1.00	1.00	0.00	1.00
Uniform Delay (d), s/veh	6.3	0.0	0.0	6.4	0.0	0.0	60.1	0.0	60.8	56.8	0.0	55.2
Incr Delay (d2), s/veh	0.3	5.4	5.4	0.1	2.2	0.5	1.3	0.0	7.4	5.0	0.0	2.5
Initial Q Delay(d3),s/veh	0.0	0.0	0.0	0.0	0.0	0.0	0.0	0.0	0.0	0.0	0.0	0.0
%ile BackOfQ(50%),veh/ln	1.1	1.7	1.8	0.7	0.7	0.1	2.0	0.0	2.6	5.8	0.0	3.5
LnGrp Delay(d),s/veh	6.6	5.4	5.4	6.5	2.2	0.5	61.4	0.0	68.1	61.8	0.0	57.7
LnGrp LOS	A	A	A	A	A	A	E		E	E		E
Approach Vol, veh/h		1893			2129			122			408	
Approach Delay, s/veh		5.5			2.0			65.0			60.8	
Approach LOS		A			A			E			E	

Timer	1	2	3	4	5	6	7	8
Assigned Phs	1	2		4	5	6		8
Phs Duration (G+Y+Rc), s	9.6	98.2		19.7	10.0	97.8		12.5
Change Period (Y+Rc), s	* 5.1999998	* 6		* 5.1999998	* 5.1999998	* 6		5.0
Max Green Setting (Gmax), s	* 5.8000002	* 85		* 18.799999	* 6.8000002	* 84		9.0
Max Q Clear Time (g_c+I1), s	3.5	2.0		13.6	4.2	2.0		7.6
Green Ext Time (p_c), s	0.0	80.2		0.9	0.0	79.3		0.0

Intersection Summary	
HCM 2010 Ctrl Delay	10.4
HCM 2010 LOS	B

Notes

User approved pedestrian interval to be less than phase max green.

User approved volume balancing among the lanes for turning movement.

* HCM 2010 computational engine requires equal clearance times for the phases crossing the barrier.

Movement	EBL	EBT	EBR	WBL	WBT	WBR	NBL	NBT	NBR	SBL	SBT	SBR
Lane Configurations												
Volume (veh/h)	0	1299	741	449	1733	0	0	0	0	108	0	334
Number	5	2	12	1	6	16				7	4	14
Initial Q (Qb), veh	0	0	0	0	0	0				0	0	0
Ped-Bike Adj(A_pbT)	1.00		1.00	1.00		1.00				1.00		1.00
Parking Bus, Adj	1.00	1.00	1.00	1.00	1.00	1.00				1.00	1.00	1.00
Adj Sat Flow, veh/h/ln	0.0	181.0	181.0	181.0	181.0	0.0				181.0	0.0	181.0
Adj Flow Rate, veh/h	0	1326	0	458	1768	0				110	0	341
Adj No. of Lanes	0	4	1	2	2	0				2	0	2
Peak Hour Factor	0.98	0.98	0.98	0.98	0.98	0.98				0.98	0.98	0.98
Percent Heavy Veh, %	0	5	5	5	5	0				5	0	5
Cap, veh/h	0	3468	857	693	2726	0				501	0	406
Arrive On Green	0.00	1.00	0.00	0.41	1.00	0.00				0.15	0.00	0.15
Sat Flow, veh/h	0	6478	1538	3343	3529	0				3343	0	2707
Grp Volume(v), veh/h	0	1326	0	458	1768	0				110	0	341
Grp Sat Flow(s),veh/h/ln	0	1556	1538	1672	1719	0				1672	0	1354
Q Serve(g_s), s	0.0	0.0	0.0	15.5	0.0	0.0				4.0	0.0	17.2
Cycle Q Clear(g_c), s	0.0	0.0	0.0	15.5	0.0	0.0				4.0	0.0	17.2
Prop In Lane	0.00		1.00	1.00		0.00				1.00		1.00
Lane Grp Cap(c), veh/h	0	3468	857	693	2726	0				501	0	406
V/C Ratio(X)	0.00	0.38	0.00	0.66	0.65	0.00				0.22	0.00	0.84
Avail Cap(c_a), veh/h	0	3468	857	693	2726	0				501	0	406
HCM Platoon Ratio	1.00	2.00	2.00	2.00	2.00	1.00				1.00	1.00	1.00
Upstream Filter(I)	0.00	0.54	0.00	0.74	0.74	0.00				1.00	0.00	1.00
Uniform Delay (d), s/veh	0.0	0.0	0.0	37.0	0.0	0.0				52.3	0.0	57.9
Incr Delay (d2), s/veh	0.0	0.2	0.0	2.4	0.9	0.0				0.2	0.0	14.5
Initial Q Delay(d3),s/veh	0.0	0.0	0.0	0.0	0.0	0.0				0.0	0.0	0.0
%ile BackOfQ(50%),veh/ln	0.0	0.0	0.0	7.4	0.3	0.0				1.9	0.0	7.3
LnGrp Delay(d),s/veh	0.0	0.2	0.0	39.4	0.9	0.0				52.5	0.0	72.4
LnGrp LOS		A		D	A					D		E
Approach Vol, veh/h		1326			2226						451	
Approach Delay, s/veh		0.2			8.8						67.5	
Approach LOS		A			A						E	

Timer	1	2	3	4	5	6	7	8
Assigned Phs	1	2		4		6		
Phs Duration (G+Y+Rc), s	33.0	82.0		25.0		115.0		
Change Period (Y+Rc), s	7.5	6.5		6.0		7.5		
Max Green Setting (Gmax), s	25.5	75.5		19.0		107.5		
Max Q Clear Time (g_c+I1), s	17.5	2.0		19.2		2.0		
Green Ext Time (p_c), s	7.1	13.3		0.0		44.1		

Intersection Summary	
HCM 2010 Ctrl Delay	12.6
HCM 2010 LOS	B

Movement	EBL	EBT	EBR	WBL	WBT	WBR	NBL	NBT	NBR	SBL	SBT	SBR
Lane Configurations												
Volume (veh/h)	346	1058	0	0	1288	123	891	0	516	0	0	0
Number	5	2	12	1	6	16	3	8	18			
Initial Q (Qb), veh	0	0	0	0	0	0	0	0	0			
Ped-Bike Adj(A_pbT)	1.00		1.00	1.00		1.00	1.00		1.00			
Parking Bus, Adj	1.00	1.00	1.00	1.00	1.00	1.00	1.00	1.00	1.00			
Adj Sat Flow, veh/h/ln	181.0	181.0	0.0	0.0	181.0	181.0	181.0	0.0	181.0			
Adj Flow Rate, veh/h	349	1069	0	0	1301	0	900	0	521			
Adj No. of Lanes	2	2	0	0	4	1	2	0	2			
Peak Hour Factor	0.99	0.99	0.99	0.99	0.99	0.99	0.99	0.99	0.99			
Percent Heavy Veh, %	5	5	0	0	5	5	5	0	5			
Cap, veh/h	482	2049	0	0	2615	646	1123	0	909			
Arrive On Green	0.14	0.60	0.00	0.00	0.42	0.00	0.34	0.00	0.34			
Sat Flow, veh/h	3343	3529	0	0	6478	1538	3343	0	2707			
Grp Volume(v), veh/h	349	1069	0	0	1301	0	900	0	521			
Grp Sat Flow(s),veh/h/ln	1672	1719	0	0	1556	1538	1672	0	1354			
Q Serve(g_s), s	12.6	23.0	0.0	0.0	19.3	0.0	30.8	0.0	19.9			
Cycle Q Clear(g_c), s	12.6	23.0	0.0	0.0	19.3	0.0	30.8	0.0	19.9			
Prop In Lane	1.00		0.00	0.00		1.00	1.00		1.00			
Lane Grp Cap(c), veh/h	482	2049	0	0	2615	646	1123	0	909			
V/C Ratio(X)	0.72	0.52	0.00	0.00	0.50	0.00	0.80	0.00	0.57			
Avail Cap(c_a), veh/h	691	2049	0	0	2615	646	1498	0	1213			
HCM Platoon Ratio	1.00	1.00	1.00	1.00	1.00	1.00	1.00	1.00	1.00			
Upstream Filter(I)	0.94	0.94	0.00	0.00	1.00	0.00	1.00	0.00	1.00			
Uniform Delay (d), s/veh	51.5	14.9	0.0	0.0	26.8	0.0	38.0	0.0	34.4			
Incr Delay (d2), s/veh	2.0	0.9	0.0	0.0	0.7	0.0	2.4	0.0	0.6			
Initial Q Delay(d3),s/veh	0.0	0.0	0.0	0.0	0.0	0.0	0.0	0.0	0.0			
%ile BackOfQ(50%),veh/ln	6.0	11.1	0.0	0.0	8.4	0.0	14.6	0.0	7.5			
LnGrp Delay(d),s/veh	53.5	15.8	0.0	0.0	27.4	0.0	40.4	0.0	35.0			
LnGrp LOS	D	B			C		D		C			
Approach Vol, veh/h		1418			1301			1421				
Approach Delay, s/veh		25.1			27.4			38.4				
Approach LOS		C			C			D				

Timer	1	2	3	4	5	6	7	8
Assigned Phs		2			5	6		8
Phs Duration (G+Y+Rc), s		93.1			22.1	71.0		46.9
Change Period (Y+Rc), s		6.4			6.6	6.4		6.6
Max Green Setting (Gmax), s		72.6			23.4	42.6		54.4
Max Q Clear Time (g_c+I1), s		25.0			14.6	21.3		32.8
Green Ext Time (p_c), s		36.5			1.0	18.6		7.5

Intersection Summary	
HCM 2010 Ctrl Delay	30.4
HCM 2010 LOS	C

HCM 2010 Signalized Intersection Summary
1: Westside Pkwy/Deerfield Pkwy & Windward Pkwy

10/15/2014

Movement	EBL	EBT	EBR	WBL	WBT	WBR	NBL	NBT	NBR	SBL	SBT	SBR
Lane Configurations												
Volume (veh/h)	96	923	213	311	1305	444	598	708	600	500	431	120
Number	5	2	12	1	6	16	3	8	18	7	4	14
Initial Q (Qb), veh	0	0	0	0	0	0	0	0	0	0	0	0
Ped-Bike Adj(A_pbT)	1.00		1.00	1.00		1.00	1.00		1.00	1.00		1.00
Parking Bus, Adj	1.00	1.00	1.00	1.00	1.00	1.00	1.00	1.00	1.00	1.00	1.00	1.00
Adj Sat Flow, veh/h/ln	182.7	182.7	182.7	182.7	182.7	182.7	182.7	182.7	182.7	182.7	182.7	190.0
Adj Flow Rate, veh/h	97	932	0	314	1318	0	604	715	0	505	435	0
Adj No. of Lanes	1	2	1	1	2	1	2	2	1	2	2	0
Peak Hour Factor	0.99	0.99	0.99	0.99	0.99	0.99	0.99	0.99	0.99	0.99	0.99	0.99
Percent Heavy Veh, %	4	4	4	4	4	4	4	4	4	4	4	4
Cap, veh/h	171	1096	461	349	1431	610	685	848	380	567	727	0
Arrive On Green	0.05	0.32	0.00	0.20	0.55	0.00	0.20	0.24	0.00	0.17	0.21	0.00
Sat Flow, veh/h	1740	3471	1553	1740	3471	1553	3375	3471	1553	3375	3563	0
Grp Volume(v), veh/h	97	932	0	314	1318	0	604	715	0	505	435	0
Grp Sat Flow(s),veh/h/ln	1740	1736	1553	1740	1736	1553	1688	1736	1553	1688	1736	0
Q Serve(g_s), s	5.0	32.9	0.0	16.2	45.4	0.0	22.8	25.7	0.0	19.2	14.8	0.0
Cycle Q Clear(g_c), s	5.0	32.9	0.0	16.2	45.4	0.0	22.8	25.7	0.0	19.2	14.8	0.0
Prop In Lane	1.00		1.00	1.00		1.00	1.00		1.00	1.00		0.00
Lane Grp Cap(c), veh/h	171	1096	461	349	1431	610	685	848	380	567	727	0
V/C Ratio(X)	0.57	0.85	0.00	0.90	0.92	0.00	0.88	0.84	0.00	0.89	0.60	0.00
Avail Cap(c_a), veh/h	171	1096	461	353	1431	610	747	1086	486	567	901	0
HCM Platoon Ratio	1.00	1.00	1.00	1.33	1.33	1.33	1.00	1.00	1.00	1.00	1.00	1.00
Upstream Filter(I)	1.00	1.00	0.00	1.00	1.00	0.00	1.00	1.00	0.00	1.00	1.00	0.00
Uniform Delay (d), s/veh	33.8	41.9	0.0	29.1	27.7	0.0	50.7	47.1	0.0	53.3	46.8	0.0
Incr Delay (d2), s/veh	2.8	8.3	0.0	24.2	11.2	0.0	10.6	4.0	0.0	15.7	0.3	0.0
Initial Q Delay(d3),s/veh	0.0	0.0	0.0	0.0	0.0	0.0	0.0	0.0	0.0	0.0	0.0	0.0
%ile BackOfQ(50%),veh/ln	2.5	17.1	0.0	13.3	23.8	0.0	11.7	12.8	0.0	10.2	7.2	0.0
LnGrp Delay(d),s/veh	36.6	50.3	0.0	53.2	38.9	0.0	61.3	51.1	0.0	69.1	47.1	0.0
LnGrp LOS	D	D		D	D		E	D		E	D	
Approach Vol, veh/h		1029			1632			1319			940	
Approach Delay, s/veh		49.0			41.6			55.8			58.9	
Approach LOS		D			D			E			E	

Timer	1	2	3	4	5	6	7	8
Assigned Phs	1	2	3	4	5	6	7	8
Phs Duration (G+Y+Rc), s	23.6	54.3	30.6	31.4	11.0	67.0	26.0	36.0
Change Period (Y+Rc), s	5.4	6.5*	5.1999998	5.6*	5.1999998	6.5*	5.1999998	5.6
Max Green Setting (Gmax), s	18.6	38.5*	27.799999	32.4*	5.8000002	51.5*	20.799999	39.4
Max Q Clear Time (g_c+I1), s	18.2	34.9	24.8	16.8	7.0	47.4	21.2	27.7
Green Ext Time (p_c), s	0.0	3.4	0.6	3.0	0.0	3.9	0.0	2.7

Intersection Summary	
HCM 2010 Ctrl Delay	50.3
HCM 2010 LOS	D

Notes

* HCM 2010 computational engine requires equal clearance times for the phases crossing the barrier.

Movement	EBL	EBT	EBR	WBL	WBT	WBR	NBL	NBT	NBR	SBL	SBT	SBR
Lane Configurations												
Volume (veh/h)	60	1960	12	53	1956	349	30	16	133	396	15	42
Number	5	2	12	1	6	16	3	8	18	7	4	14
Initial Q (Qb), veh	0	0	0	0	0	0	0	0	0	0	0	0
Ped-Bike Adj(A_pbT)	1.00		1.00	1.00		1.00	1.00		1.00	1.00		1.00
Parking Bus, Adj	1.00	1.00	1.00	1.00	1.00	1.00	1.00	1.00	1.00	1.00	1.00	1.00
Adj Sat Flow, veh/h/ln	182.7	182.7	190.0	182.7	182.7	182.7	190.0	182.7	182.7	182.7	182.7	182.7
Adj Flow Rate, veh/h	62	2021	12	55	2016	360	31	16	137	419	0	43
Adj No. of Lanes	1	2	0	1	2	1	0	1	1	2	0	1
Peak Hour Factor	0.97	0.97	0.97	0.97	0.97	0.97	0.97	0.97	0.97	0.97	0.97	0.97
Percent Heavy Veh, %	4	4	4	4	4	4	4	4	4	4	4	4
Cap, veh/h	215	2217	13	148	2172	972	85	44	113	499	0	223
Arrive On Green	0.04	0.63	0.61	0.08	1.00	1.00	0.07	0.07	0.07	0.14	0.00	0.14
Sat Flow, veh/h	1740	3538	21	1740	3471	1553	1167	602	1553	3480	0	1553
Grp Volume(v), veh/h	62	990	1043	55	2016	360	47	0	137	419	0	43
Grp Sat Flow(s),veh/h/ln	1740	1736	1823	1740	1736	1553	1769	0	1553	1740	0	1553
Q Serve(g_s), s	1.7	68.2	68.5	1.5	0.0	0.0	3.5	0.0	10.0	16.1	0.0	3.4
Cycle Q Clear(g_c), s	1.7	68.2	68.5	1.5	0.0	0.0	3.5	0.0	10.0	16.1	0.0	3.4
Prop In Lane	1.00		0.01	1.00		1.00	0.66		1.00	1.00		1.00
Lane Grp Cap(c), veh/h	215	1088	1143	148	2172	972	129	0	113	499	0	223
V/C Ratio(X)	0.29	0.91	0.91	0.37	0.93	0.37	0.37	0.00	1.21	0.84	0.00	0.19
Avail Cap(c_a), veh/h	231	1088	1143	166	2172	972	129	0	113	532	0	237
HCM Platoon Ratio	1.00	1.00	1.00	2.00	2.00	2.00	1.00	1.00	1.00	1.00	1.00	1.00
Upstream Filter(I)	1.00	1.00	1.00	0.53	0.53	0.53	1.00	0.00	1.00	1.00	0.00	1.00
Uniform Delay (d), s/veh	8.2	22.3	22.4	29.3	0.0	0.0	60.7	0.0	63.7	57.3	0.0	51.9
Incr Delay (d2), s/veh	0.3	12.8	12.5	0.3	4.9	0.6	0.6	0.0	152.6	10.9	0.0	0.4
Initial Q Delay(d3),s/veh	0.0	0.0	0.0	0.0	0.0	0.0	0.0	0.0	0.0	0.0	0.0	0.0
%ile BackOfQ(50%),veh/ln	0.8	36.3	38.1	1.3	1.5	0.2	1.7	0.0	9.1	8.5	0.0	1.5
LnGrp Delay(d),s/veh	8.4	35.1	34.8	29.6	4.9	0.6	61.3	0.0	216.4	68.2	0.0	52.3
LnGrp LOS	A	D	C	C	A	A	E		F	E		D
Approach Vol, veh/h		2095			2431			184			462	
Approach Delay, s/veh		34.2			4.8			176.8			66.8	
Approach LOS		C			A			F			E	

Timer	1	2	3	4	5	6	7	8
Assigned Phs	1	2		4	5	6		8
Phs Duration (G+Y+Rc), s	9.6	92.7		23.7	9.7	92.5		14.0
Change Period (Y+Rc), s	* 5.1999998	* 6		* 5.1999998	* 5.1999998	* 6		5.0
Max Green Setting (Gmax), s	* 5.8000002	* 84		* 19.799999	* 5.8000002	* 84		9.0
Max Q Clear Time (g_c+I1), s	3.5	70.5		18.1	3.7	2.0		12.0
Green Ext Time (p_c), s	0.0	13.4		0.4	0.0	81.1		0.0

Intersection Summary	
HCM 2010 Ctrl Delay	28.4
HCM 2010 LOS	C

Notes

User approved pedestrian interval to be less than phase max green.

User approved volume balancing among the lanes for turning movement.

* HCM 2010 computational engine requires equal clearance times for the phases crossing the barrier.

Movement	EBL	EBT	EBR	WBL	WBT	WBR	NBL	NBT	NBR	SBL	SBT	SBR
Lane Configurations												
Volume (veh/h)	0	1254	1227	1206	2007	0	0	0	0	135	0	356
Number	5	2	12	1	6	16				7	4	14
Initial Q (Qb), veh	0	0	0	0	0	0				0	0	0
Ped-Bike Adj(A_pbT)	1.00		1.00	1.00		1.00				1.00		1.00
Parking Bus, Adj	1.00	1.00	1.00	1.00	1.00	1.00				1.00	1.00	1.00
Adj Sat Flow, veh/h/ln	0.0	182.7	184.5	184.5	182.7	0.0				184.5	0.0	184.5
Adj Flow Rate, veh/h	0	1306	0	1256	2091	0				141	0	371
Adj No. of Lanes	0	4	1	2	2	0				2	0	2
Peak Hour Factor	0.96	0.96	0.96	0.96	0.96	0.96				0.96	0.96	0.96
Percent Heavy Veh, %	0	4	3	3	4	0				3	0	3
Cap, veh/h	0	3501	874	949	3000	0				268	0	217
Arrive On Green	0.00	0.74	0.00	0.56	1.00	0.00				0.08	0.00	0.08
Sat Flow, veh/h	0	6540	1568	3408	3563	0				3408	0	2760
Grp Volume(v), veh/h	0	1306	0	1256	2091	0				141	0	371
Grp Sat Flow(s),veh/h/ln	0	1571	1568	1704	1736	0				1704	0	1380
Q Serve(g_s), s	0.0	10.4	0.0	39.0	0.0	0.0				5.6	0.0	11.0
Cycle Q Clear(g_c), s	0.0	10.4	0.0	39.0	0.0	0.0				5.6	0.0	11.0
Prop In Lane	0.00		1.00	1.00		0.00				1.00		1.00
Lane Grp Cap(c), veh/h	0	3501	874	949	3000	0				268	0	217
V/C Ratio(X)	0.00	0.37	0.00	1.32	0.70	0.00				0.53	0.00	1.71
Avail Cap(c_a), veh/h	0	3501	874	949	3000	0				268	0	217
HCM Platoon Ratio	1.00	1.33	1.33	2.00	2.00	1.00				1.00	1.00	1.00
Upstream Filter(I)	0.00	0.33	0.00	0.22	0.22	0.00				1.00	0.00	1.00
Uniform Delay (d), s/veh	0.0	9.4	0.0	31.0	0.0	0.0				62.0	0.0	64.5
Incr Delay (d2), s/veh	0.0	0.1	0.0	147.0	0.3	0.0				1.9	0.0	338.8
Initial Q Delay(d3),s/veh	0.0	0.0	0.0	0.0	0.0	0.0				0.0	0.0	0.0
%ile BackOfQ(50%),veh/ln	0.0	4.5	0.0	37.3	0.1	0.0				2.7	0.0	14.4
LnGrp Delay(d),s/veh	0.0	9.5	0.0	178.0	0.3	0.0				63.9	0.0	403.3
LnGrp LOS		A		F	A					E		F
Approach Vol, veh/h		1306			3347						512	
Approach Delay, s/veh		9.5			67.0						309.9	
Approach LOS		A			E						F	

Timer	1	2	3	4	5	6	7	8
Assigned Phs	1	2		4		6		
Phs Duration (G+Y+Rc), s	43.0	82.0		15.0		125.0		
Change Period (Y+Rc), s	7.5	6.5		6.0		7.5		
Max Green Setting (Gmax), s	35.5	75.5		9.0		117.5		
Max Q Clear Time (g_c+I1), s	41.0	12.4		13.0		2.0		
Green Ext Time (p_c), s	0.0	12.8		0.0		95.4		

Intersection Summary	
HCM 2010 Ctrl Delay	76.5
HCM 2010 LOS	E

Movement	EBL	EBT	EBR	WBL	WBT	WBR	NBL	NBT	NBR	SBL	SBT	SBR
Lane Configurations												
Volume (veh/h)	487	905	0	0	2161	310	1060	0	566	0	0	0
Number	5	2	12	1	6	16	3	8	18			
Initial Q (Qb), veh	0	0	0	0	0	0	0	0	0			
Ped-Bike Adj(A_pbT)	1.00		1.00	1.00		1.00	1.00		1.00			
Parking Bus, Adj	1.00	1.00	1.00	1.00	1.00	1.00	1.00	1.00	1.00			
Adj Sat Flow, veh/h/ln	184.5	182.7	0.0	0.0	182.7	184.5	184.5	0.0	184.5			
Adj Flow Rate, veh/h	524	973	0	0	2324	0	1140	0	609			
Adj No. of Lanes	2	2	0	0	4	1	2	0	2			
Peak Hour Factor	0.93	0.93	0.93	0.93	0.93	0.93	0.93	0.93	0.93			
Percent Heavy Veh, %	3	4	0	0	4	3	3	0	3			
Cap, veh/h	560	2033	0	0	2469	616	1203	0	974			
Arrive On Green	0.22	0.78	0.00	0.00	0.39	0.00	0.35	0.00	0.35			
Sat Flow, veh/h	3408	3563	0	0	6540	1568	3408	0	2760			
Grp Volume(v), veh/h	524	973	0	0	2324	0	1140	0	609			
Grp Sat Flow(s),veh/h/ln	1704	1736	0	0	1571	1568	1704	0	1380			
Q Serve(g_s), s	21.1	13.8	0.0	0.0	49.9	0.0	45.5	0.0	25.7			
Cycle Q Clear(g_c), s	21.1	13.8	0.0	0.0	49.9	0.0	45.5	0.0	25.7			
Prop In Lane	1.00		0.00	0.00		1.00	1.00		1.00			
Lane Grp Cap(c), veh/h	560	2033	0	0	2469	616	1203	0	974			
V/C Ratio(X)	0.94	0.48	0.00	0.00	0.94	0.00	0.95	0.00	0.63			
Avail Cap(c_a), veh/h	560	2033	0	0	2469	616	1203	0	974			
HCM Platoon Ratio	1.33	1.33	1.00	1.00	1.00	1.00	1.00	1.00	1.00			
Upstream Filter(I)	0.93	0.93	0.00	0.00	1.00	0.00	1.00	0.00	1.00			
Uniform Delay (d), s/veh	54.0	7.9	0.0	0.0	40.9	0.0	44.0	0.0	37.6			
Incr Delay (d2), s/veh	22.1	0.8	0.0	0.0	8.8	0.0	15.2	0.0	1.3			
Initial Q Delay(d3),s/veh	0.0	0.0	0.0	0.0	0.0	0.0	0.0	0.0	0.0			
%ile BackOfQ(50%),veh/ln	11.6	6.7	0.0	0.0	23.1	0.0	23.9	0.0	9.9			
LnGrp Delay(d),s/veh	76.1	8.7	0.0	0.0	49.7	0.0	59.2	0.0	38.9			
LnGrp LOS	E	A			D		E		D			
Approach Vol, veh/h		1497			2324			1749				
Approach Delay, s/veh		32.3			49.7			52.1				
Approach LOS		C			D			D				

Timer	1	2	3	4	5	6	7	8
Assigned Phs		2			5	6		8
Phs Duration (G+Y+Rc), s		86.0			27.0	59.0		54.0
Change Period (Y+Rc), s		6.4			6.6	6.4		6.6
Max Green Setting (Gmax), s		79.6			20.4	52.6		47.4
Max Q Clear Time (g_c+I1), s		15.8			23.1	51.9		47.5
Green Ext Time (p_c), s		59.3			0.0	0.7		0.0

Intersection Summary	
HCM 2010 Ctrl Delay	45.8
HCM 2010 LOS	D

Movement	EBL	EBT	EBR	WBL	WBT	WBR	NBL	NBT	NBR	SBL	SBT	SBR
Lane Configurations												
Volume (veh/h)	136	864	309	591	711	454	235	390	304	353	635	69
Number	5	2	12	1	6	16	3	8	18	7	4	14
Initial Q (Qb), veh	0	0	0	0	0	0	0	0	0	0	0	0
Ped-Bike Adj(A_pbT)	1.00		1.00	1.00		1.00	1.00		1.00	1.00		1.00
Parking Bus, Adj	1.00	1.00	1.00	1.00	1.00	1.00	1.00	1.00	1.00	1.00	1.00	1.00
Adj Sat Flow, veh/h/ln	1810	1810	1810	1810	1810	1810	1810	1810	1810	1810	1810	1900
Adj Flow Rate, veh/h	142	900	0	616	741	0	245	406	0	368	661	0
Adj No. of Lanes	1	2	1	2	2	1	2	2	1	2	2	0
Peak Hour Factor	0.96	0.96	0.96	0.96	0.96	0.96	0.96	0.96	0.96	0.96	0.96	0.96
Percent Heavy Veh, %	5	5	5	5	5	5	5	5	5	5	5	5
Cap, veh/h	415	1225	518	684	1690	726	309	626	280	449	770	0
Arrive On Green	0.07	0.36	0.00	0.34	0.82	0.00	0.09	0.18	0.00	0.13	0.22	0.00
Sat Flow, veh/h	1723	3438	1538	3343	3438	1538	3343	3438	1538	3343	3529	0
Grp Volume(v), veh/h	142	900	0	616	741	0	245	406	0	368	661	0
Grp Sat Flow(s),veh/h/ln	1723	1719	1538	1672	1719	1538	1672	1719	1538	1672	1719	0
Q Serve(g_s), s	6.8	29.7	0.0	22.8	7.8	0.0	9.3	14.2	0.0	13.9	24.0	0.0
Cycle Q Clear(g_c), s	6.8	29.7	0.0	22.8	7.8	0.0	9.3	14.2	0.0	13.9	24.0	0.0
Prop In Lane	1.00		1.00	1.00		1.00	1.00		1.00	1.00		0.00
Lane Grp Cap(c), veh/h	415	1225	518	684	1690	726	309	626	280	449	770	0
V/C Ratio(X)	0.34	0.73	0.00	0.90	0.44	0.00	0.79	0.65	0.00	0.82	0.86	0.00
Avail Cap(c_a), veh/h	415	1225	518	720	1690	726	309	637	285	514	849	0
HCM Platoon Ratio	1.00	1.00	1.00	1.67	1.67	1.67	1.00	1.00	1.00	1.00	1.00	1.00
Upstream Filter(I)	1.00	1.00	0.00	1.00	1.00	0.00	1.00	1.00	0.00	1.00	1.00	0.00
Uniform Delay (d), s/veh	24.2	36.5	0.0	41.6	6.6	0.0	57.8	49.3	0.0	54.8	48.5	0.0
Incr Delay (d2), s/veh	0.2	3.9	0.0	13.5	0.8	0.0	12.3	1.7	0.0	7.9	7.5	0.0
Initial Q Delay(d3),s/veh	0.0	0.0	0.0	0.0	0.0	0.0	0.0	0.0	0.0	0.0	0.0	0.0
%ile BackOfQ(-26165%),veh/ln	3.2	14.8	0.0	11.7	3.8	0.0	4.8	6.9	0.0	6.9	12.2	0.0
LnGrp Delay(d),s/veh	24.4	40.4	0.0	55.1	7.5	0.0	70.1	51.1	0.0	62.7	56.0	0.0
LnGrp LOS	C	D		E	A		E	D		E	E	
Approach Vol, veh/h		1042			1357			651			1029	
Approach Delay, s/veh		38.2			29.1			58.2			58.4	
Approach LOS		D			C			E			E	

Timer	1	2	3	4	5	6	7	8
Assigned Phs	1	2	3	4	5	6	7	8
Phs Duration (G+Y+Rc), s	30.6	50.3	16.0	33.1	13.0	67.9	21.4	27.7
Change Period (Y+Rc), s	5.4	6.5	* 5.2	5.6	* 5.2	6.5	* 5.2	5.6
Max Green Setting (Gmax), s	26.6	39.4	* 11	30.5	* 7.8	58.4	* 19	22.5
Max Q Clear Time (g_c+I1), s	24.8	31.7	11.3	26.0	8.8	9.8	15.9	16.2
Green Ext Time (p_c), s	0.4	6.3	0.0	1.5	0.0	24.1	0.3	1.9

Intersection Summary	
HCM 2010 Ctrl Delay	43.5
HCM 2010 LOS	D

Notes

* HCM 2010 computational engine requires equal clearance times for the phases crossing the barrier.

Movement	EBL	EBT	EBR	WBL	WBT	WBR	NBL	NBT	NBR	SBL	SBT	SBR
Lane Configurations												
Volume (veh/h)	88	1399	42	141	1712	337	17	2	24	192	18	22
Number	5	2	12	1	6	16	3	8	18	7	4	14
Initial Q (Qb), veh	0	0	0	0	0	0	0	0	0	0	0	0
Ped-Bike Adj(A_pbT)	1.00		1.00	1.00		1.00	1.00		1.00	1.00		1.00
Parking Bus, Adj	1.00	1.00	1.00	1.00	1.00	1.00	1.00	1.00	1.00	1.00	1.00	1.00
Adj Sat Flow, veh/h/ln	1810	1810	1900	1810	1810	1810	1900	1810	1810	1810	1810	1810
Adj Flow Rate, veh/h	92	1457	44	147	1783	351	18	2	25	214	0	23
Adj No. of Lanes	1	2	0	1	3	1	0	1	1	2	0	1
Peak Hour Factor	0.96	0.96	0.96	0.96	0.96	0.96	0.96	0.96	0.96	0.96	0.96	0.96
Percent Heavy Veh, %	5	5	5	5	5	5	5	5	5	5	5	5
Cap, veh/h	232	2385	72	375	3474	1082	60	7	59	306	0	137
Arrive On Green	0.09	1.00	1.00	0.05	0.70	0.70	0.04	0.04	0.04	0.09	0.00	0.09
Sat Flow, veh/h	1723	3408	103	1723	4940	1538	1558	173	1538	3447	0	1538
Grp Volume(v), veh/h	92	734	767	147	1783	351	20	0	25	214	0	23
Grp Sat Flow(s),veh/h/ln	1723	1719	1791	1723	1647	1538	1732	0	1538	1723	0	1538
Q Serve(g_s), s	1.9	0.0	0.0	3.1	21.8	11.4	1.5	0.0	2.1	7.8	0.0	1.8
Cycle Q Clear(g_c), s	1.9	0.0	0.0	3.1	21.8	11.4	1.5	0.0	2.1	7.8	0.0	1.8
Prop In Lane	1.00		0.06	1.00		1.00	0.90		1.00	1.00		1.00
Lane Grp Cap(c), veh/h	232	1203	1254	375	3474	1082	67	0	59	306	0	137
V/C Ratio(X)	0.40	0.61	0.61	0.39	0.51	0.32	0.30	0.00	0.42	0.70	0.00	0.17
Avail Cap(c_a), veh/h	285	1203	1254	489	3474	1082	133	0	118	453	0	202
HCM Platoon Ratio	2.00	2.00	2.00	1.00	1.00	1.00	1.00	1.00	1.00	1.00	1.00	1.00
Upstream Filter(I)	1.00	1.00	1.00	0.79	0.79	0.79	1.00	0.00	1.00	1.00	0.00	1.00
Uniform Delay (d), s/veh	7.6	0.0	0.0	4.7	9.0	7.4	60.8	0.0	61.1	57.5	0.0	54.8
Incr Delay (d2), s/veh	0.4	2.3	2.2	0.2	0.4	0.6	0.9	0.0	1.8	2.9	0.0	0.6
Initial Q Delay(d3),s/veh	0.0	0.0	0.0	0.0	0.0	0.0	0.0	0.0	0.0	0.0	0.0	0.0
%ile BackOfQ(-26165%),veh/ln	1.0	0.8	0.8	1.4	9.9	5.0	0.7	0.0	0.9	3.9	0.0	0.8
LnGrp Delay(d),s/veh	8.0	2.3	2.2	4.9	9.4	8.0	61.7	0.0	62.8	60.4	0.0	55.4
LnGrp LOS	A	A	A	A	A	A	E		E	E		E
Approach Vol, veh/h		1593			2281			45			237	
Approach Delay, s/veh		2.6			8.9			62.3			59.9	
Approach LOS		A			A			E			E	

Timer	1	2	3	4	5	6	7	8
Assigned Phs	1	2		4	5	6		8
Phs Duration (G+Y+Rc), s	10.4	95.0		15.5	10.0	95.4		9.0
Change Period (Y+Rc), s	* 5.2	* 6		* 5.2	* 5.2	* 6		5.0
Max Green Setting (Gmax), s	* 14	* 70		* 16	* 8.8	* 75		9.0
Max Q Clear Time (g_c+I1), s	5.1	2.0		9.8	3.9	23.8		4.1
Green Ext Time (p_c), s	0.2	64.2		0.5	0.0	49.0		0.0

Intersection Summary	
HCM 2010 Ctrl Delay	10.0
HCM 2010 LOS	A

Notes

User approved pedestrian interval to be less than phase max green.

User approved volume balancing among the lanes for turning movement.

* HCM 2010 computational engine requires equal clearance times for the phases crossing the barrier.

Movement	EBL	EBT	EBR	WBL	WBT	WBR	NBL	NBT	NBR	SBL	SBT	SBR
Lane Configurations												
Volume (veh/h)	0	1157	454	302	1561	0	0	0	0	592	0	634
Number	5	2	12	1	6	16				7	4	14
Initial Q (Qb), veh	0	0	0	0	0	0				0	0	0
Ped-Bike Adj(A_pbT)	1.00		1.00	1.00		1.00				1.00		1.00
Parking Bus, Adj	1.00	1.00	1.00	1.00	1.00	1.00				1.00	1.00	1.00
Adj Sat Flow, veh/h/ln	0	1810	1827	1827	1810	0				1827	0	1827
Adj Flow Rate, veh/h	0	1193	0	311	1609	0				610	0	654
Adj No. of Lanes	0	4	1	2	3	0				2	0	2
Peak Hour Factor	0.97	0.97	0.97	0.97	0.97	0.97				0.97	0.97	0.97
Percent Heavy Veh, %	0	5	4	4	5	0				4	0	4
Cap, veh/h	0	2298	573	820	3176	0				997	0	808
Arrive On Green	0.00	0.12	0.00	0.32	0.86	0.00				0.30	0.00	0.30
Sat Flow, veh/h	0	6478	1553	3375	5103	0				3375	0	2733
Grp Volume(v), veh/h	0	1193	0	311	1609	0				610	0	654
Grp Sat Flow(s),veh/h/ln	0	1556	1553	1688	1647	0				1688	0	1367
Q Serve(g_s), s	0.0	23.4	0.0	9.2	10.8	0.0				20.2	0.0	28.8
Cycle Q Clear(g_c), s	0.0	23.4	0.0	9.2	10.8	0.0				20.2	0.0	28.8
Prop In Lane	0.00		1.00	1.00		0.00				1.00		1.00
Lane Grp Cap(c), veh/h	0	2298	573	820	3176	0				997	0	808
V/C Ratio(X)	0.00	0.52	0.00	0.38	0.51	0.00				0.61	0.00	0.81
Avail Cap(c_a), veh/h	0	2298	573	820	3176	0				1220	0	988
HCM Platoon Ratio	1.00	0.33	0.33	1.33	1.33	1.00				1.00	1.00	1.00
Upstream Filter(I)	0.00	0.71	0.00	0.89	0.89	0.00				1.00	0.00	1.00
Uniform Delay (d), s/veh	0.0	46.3	0.0	36.4	4.1	0.0				39.4	0.0	42.4
Incr Delay (d2), s/veh	0.0	0.6	0.0	0.5	0.5	0.0				0.6	0.0	4.2
Initial Q Delay(d3),s/veh	0.0	0.0	0.0	0.0	0.0	0.0				0.0	0.0	0.0
%ile BackOfQ(-26165%),veh/ln	0.0	10.2	0.0	4.4	4.8	0.0				9.5	0.0	11.4
LnGrp Delay(d),s/veh	0.0	46.9	0.0	37.0	4.7	0.0				40.0	0.0	46.7
LnGrp LOS		D		D	A					D		D
Approach Vol, veh/h		1193			1920						1264	
Approach Delay, s/veh		46.9			9.9						43.4	
Approach LOS		D			A						D	

Timer	1	2	3	4	5	6	7	8
Assigned Phs	1	2		4		6		
Phs Duration (G+Y+Rc), s	35.6	52.0		42.4		87.6		
Change Period (Y+Rc), s	7.5	6.5		6.0		7.5		
Max Green Setting (Gmax), s	19.5	45.5		45.0		71.5		
Max Q Clear Time (g_c+I1), s	11.2	25.4		30.8		12.8		
Green Ext Time (p_c), s	6.7	8.3		5.6		25.0		

Intersection Summary	
HCM 2010 Ctrl Delay	29.7
HCM 2010 LOS	C

Movement	EBL	EBT	EBR	WBL	WBT	WBR	NBL	NBT	NBR	SBL	SBT	SBR
Lane Configurations												
Volume (veh/h)	281	1472	0	0	850	73	1016	0	1098	0	0	0
Number	5	2	12	1	6	16	3	8	18			
Initial Q (Qb), veh	0	0	0	0	0	0	0	0	0			
Ped-Bike Adj(A_pbT)	1.00		1.00	1.00		1.00	1.00		1.00			
Parking Bus, Adj	1.00	1.00	1.00	1.00	1.00	1.00	1.00	1.00	1.00			
Adj Sat Flow, veh/h/ln	1827	1810	0	0	1810	1827	1827	0	1827			
Adj Flow Rate, veh/h	290	1518	0	0	876	0	1047	0	1132			
Adj No. of Lanes	2	2	0	0	4	1	3	0	2			
Peak Hour Factor	0.97	0.97	0.97	0.97	0.97	0.97	0.97	0.97	0.97			
Percent Heavy Veh, %	4	5	0	0	5	4	4	0	4			
Cap, veh/h	394	1720	0	0	2196	548	2127	0	1185			
Arrive On Green	0.23	1.00	0.00	0.00	0.35	0.00	0.43	0.00	0.43			
Sat Flow, veh/h	3375	3529	0	0	6478	1553	4907	0	2733			
Grp Volume(v), veh/h	290	1518	0	0	876	0	1047	0	1132			
Grp Sat Flow(s),veh/h/ln	1688	1719	0	0	1556	1553	1636	0	1367			
Q Serve(g_s), s	10.3	0.0	0.0	0.0	13.8	0.0	20.0	0.0	52.1			
Cycle Q Clear(g_c), s	10.3	0.0	0.0	0.0	13.8	0.0	20.0	0.0	52.1			
Prop In Lane	1.00		0.00	0.00		1.00	1.00		1.00			
Lane Grp Cap(c), veh/h	394	1720	0	0	2196	548	2127	0	1185			
V/C Ratio(X)	0.74	0.88	0.00	0.00	0.40	0.00	0.49	0.00	0.96			
Avail Cap(c_a), veh/h	441	1720	0	0	2196	548	2129	0	1186			
HCM Platoon Ratio	2.00	2.00	1.00	1.00	1.00	1.00	1.00	1.00	1.00			
Upstream Filter(I)	0.86	0.86	0.00	0.00	1.00	0.00	1.00	0.00	1.00			
Uniform Delay (d), s/veh	48.0	0.0	0.0	0.0	31.7	0.0	26.5	0.0	35.6			
Incr Delay (d2), s/veh	4.8	6.1	0.0	0.0	0.5	0.0	0.2	0.0	16.5			
Initial Q Delay(d3),s/veh	0.0	0.0	0.0	0.0	0.0	0.0	0.0	0.0	0.0			
%ile BackOfQ(-26165%),veh/ln	5.1	1.4	0.0	0.0	6.0	0.0	9.1	0.0	22.4			
LnGrp Delay(d),s/veh	52.8	6.1	0.0	0.0	32.2	0.0	26.7	0.0	52.1			
LnGrp LOS	D	A			C		C		D			
Approach Vol, veh/h		1808			876			2179				
Approach Delay, s/veh		13.6			32.2			39.9				
Approach LOS		B			C			D				

Timer	1	2	3	4	5	6	7	8
Assigned Phs		2			5	6		8
Phs Duration (G+Y+Rc), s		69.0			19.2	49.9		61.0
Change Period (Y+Rc), s		6.4			6.6	6.4		6.6
Max Green Setting (Gmax), s		62.6			14.4	41.6		54.4
Max Q Clear Time (g_c+I1), s		2.0			12.3	15.8		54.1
Green Ext Time (p_c), s		45.2			0.2	22.4		0.3

Intersection Summary	
HCM 2010 Ctrl Delay	28.7
HCM 2010 LOS	C

Movement	EBL	EBT	EBR	WBL	WBT	WBR	NBL	NBT	NBR	SBL	SBT	SBR
Lane Configurations												
Volume (veh/h)	167	1278	365	226	1353	327	382	307	229	331	308	227
Number	5	2	12	1	6	16	3	8	18	7	4	14
Initial Q (Qb), veh	0	0	0	0	0	0	0	0	0	0	0	0
Ped-Bike Adj(A_pbT)	1.00		1.00	1.00		1.00	1.00		1.00	1.00		1.00
Parking Bus, Adj	1.00	1.00	1.00	1.00	1.00	1.00	1.00	1.00	1.00	1.00	1.00	1.00
Adj Sat Flow, veh/h/ln	1810	1810	1810	1810	1810	1810	1810	1810	1810	1810	1810	1900
Adj Flow Rate, veh/h	170	1304	0	231	1381	0	390	313	0	338	314	0
Adj No. of Lanes	1	2	1	2	2	1	2	2	1	2	2	0
Peak Hour Factor	0.98	0.98	0.98	0.98	0.98	0.98	0.98	0.98	0.98	0.98	0.98	0.98
Percent Heavy Veh, %	5	5	5	5	5	5	5	5	5	5	5	5
Cap, veh/h	369	1857	803	287	1920	831	460	467	209	415	420	0
Arrive On Green	0.07	0.54	0.00	0.17	1.00	0.00	0.14	0.14	0.00	0.12	0.12	0.00
Sat Flow, veh/h	1723	3438	1538	3343	3438	1538	3343	3438	1538	3343	3529	0
Grp Volume(v), veh/h	170	1304	0	231	1381	0	390	313	0	338	314	0
Grp Sat Flow(s),veh/h/ln	1723	1719	1538	1672	1719	1538	1672	1719	1538	1672	1719	0
Q Serve(g_s), s	6.2	39.3	0.0	9.3	0.0	0.0	15.9	12.1	0.0	13.8	12.4	0.0
Cycle Q Clear(g_c), s	6.2	39.3	0.0	9.3	0.0	0.0	15.9	12.1	0.0	13.8	12.4	0.0
Prop In Lane	1.00		1.00	1.00		1.00	1.00		1.00	1.00		0.00
Lane Grp Cap(c), veh/h	369	1857	803	287	1920	831	460	467	209	415	420	0
V/C Ratio(X)	0.46	0.70	0.00	0.81	0.72	0.00	0.85	0.67	0.00	0.81	0.75	0.00
Avail Cap(c_a), veh/h	413	1857	803	287	1920	831	478	565	253	501	589	0
HCM Platoon Ratio	1.00	1.00	1.00	2.00	2.00	2.00	1.00	1.00	1.00	1.00	1.00	1.00
Upstream Filter(I)	1.00	1.00	0.00	1.00	1.00	0.00	1.00	1.00	0.00	1.00	1.00	0.00
Uniform Delay (d), s/veh	12.5	23.9	0.0	56.9	0.0	0.0	58.9	57.5	0.0	59.8	59.3	0.0
Incr Delay (d2), s/veh	0.3	2.2	0.0	14.4	2.4	0.0	12.3	1.4	0.0	7.1	1.7	0.0
Initial Q Delay(d3),s/veh	0.0	0.0	0.0	0.0	0.0	0.0	0.0	0.0	0.0	0.0	0.0	0.0
%ile BackOfQ(-26165%),veh/ln	2.9	19.2	0.0	4.9	0.6	0.0	8.1	5.9	0.0	6.8	6.0	0.0
LnGrp Delay(d),s/veh	12.9	26.1	0.0	71.3	2.4	0.0	71.2	58.9	0.0	66.8	61.1	0.0
LnGrp LOS	B	C		E	A		E	E		E	E	
Approach Vol, veh/h		1474			1612			703			652	
Approach Delay, s/veh		24.6			12.2			65.7			64.1	
Approach LOS		C			B			E			E	

Timer	1	2	3	4	5	6	7	8
Assigned Phs	1	2	3	4	5	6	7	8
Phs Duration (G+Y+Rc), s	16.0	79.6	23.3	21.1	13.4	82.2	21.4	23.0
Change Period (Y+Rc), s	5.4	6.5	* 5.2	5.6	* 5.2	6.5	* 5.2	5.6
Max Green Setting (Gmax), s	10.6	65.5	* 19	22.4	* 12	64.5	* 20	21.4
Max Q Clear Time (g_c+I1), s	11.3	41.3	17.9	14.4	8.2	2.0	15.8	14.1
Green Ext Time (p_c), s	0.0	22.2	0.1	1.2	0.1	51.4	0.4	1.1

Intersection Summary	
HCM 2010 Ctrl Delay	32.4
HCM 2010 LOS	C

Notes

* HCM 2010 computational engine requires equal clearance times for the phases crossing the barrier.

Movement	EBL	EBT	EBR	WBL	WBT	WBR	NBL	NBT	NBR	SBL	SBT	SBR
Lane Configurations												
Volume (veh/h)	123	1655	62	57	1715	277	44	11	64	309	15	95
Number	5	2	12	1	6	16	3	8	18	7	4	14
Initial Q (Qb), veh	0	0	0	0	0	0	0	0	0	0	0	0
Ped-Bike Adj(A_pbT)	1.00		1.00	1.00		1.00	1.00		1.00	1.00		1.00
Parking Bus, Adj	1.00	1.00	1.00	1.00	1.00	1.00	1.00	1.00	1.00	1.00	1.00	1.00
Adj Sat Flow, veh/h/ln	1810	1810	1900	1810	1810	1810	1900	1810	1810	1810	1810	1810
Adj Flow Rate, veh/h	127	1706	64	59	1768	286	45	11	66	330	0	98
Adj No. of Lanes	1	2	0	1	3	1	0	1	1	2	0	1
Peak Hour Factor	0.97	0.97	0.97	0.97	0.97	0.97	0.97	0.97	0.97	0.97	0.97	0.97
Percent Heavy Veh, %	5	5	5	5	5	5	5	5	5	5	5	5
Cap, veh/h	262	2227	83	290	3217	1002	88	22	97	424	0	189
Arrive On Green	0.10	1.00	1.00	0.08	1.00	1.00	0.06	0.06	0.06	0.12	0.00	0.12
Sat Flow, veh/h	1723	3380	126	1723	4940	1538	1398	342	1538	3447	0	1538
Grp Volume(v), veh/h	127	864	906	59	1768	286	56	0	66	330	0	98
Grp Sat Flow(s),veh/h/ln	1723	1719	1787	1723	1647	1538	1740	0	1538	1723	0	1538
Q Serve(g_s), s	3.5	0.0	0.0	1.5	0.0	0.0	4.4	0.0	5.9	13.0	0.0	8.4
Cycle Q Clear(g_c), s	3.5	0.0	0.0	1.5	0.0	0.0	4.4	0.0	5.9	13.0	0.0	8.4
Prop In Lane	1.00		0.07	1.00		1.00	0.80		1.00	1.00		1.00
Lane Grp Cap(c), veh/h	262	1133	1178	290	3217	1002	110	0	97	424	0	189
V/C Ratio(X)	0.48	0.76	0.77	0.20	0.55	0.29	0.51	0.00	0.68	0.78	0.00	0.52
Avail Cap(c_a), veh/h	339	1133	1178	306	3217	1002	124	0	110	542	0	242
HCM Platoon Ratio	2.00	2.00	2.00	2.00	2.00	2.00	1.00	1.00	1.00	1.00	1.00	1.00
Upstream Filter(I)	1.00	1.00	1.00	0.87	0.87	0.87	1.00	0.00	1.00	1.00	0.00	1.00
Uniform Delay (d), s/veh	6.7	0.0	0.0	6.8	0.0	0.0	63.5	0.0	64.2	59.5	0.0	57.5
Incr Delay (d2), s/veh	0.5	4.9	4.9	0.1	0.6	0.6	1.4	0.0	9.8	5.5	0.0	2.2
Initial Q Delay(d3),s/veh	0.0	0.0	0.0	0.0	0.0	0.0	0.0	0.0	0.0	0.0	0.0	0.0
%ile BackOfQ(-26165%),veh/ln	1.6	1.5	1.6	0.7	0.2	0.2	2.1	0.0	2.8	6.5	0.0	3.7
LnGrp Delay(d),s/veh	7.2	4.9	4.9	6.9	0.6	0.6	64.9	0.0	74.0	65.0	0.0	59.7
LnGrp LOS	A	A	A	A	A	A	E		E	E		E
Approach Vol, veh/h		1897			2113			122			428	
Approach Delay, s/veh		5.0			0.8			69.8			63.8	
Approach LOS		A			A			E			E	

Timer	1	2	3	4	5	6	7	8
Assigned Phs	1	2		4	5	6		8
Phs Duration (G+Y+Rc), s	9.7	96.3		21.2	10.8	95.2		12.8
Change Period (Y+Rc), s	* 5.2	* 6		* 5.2	* 5.2	* 6		5.0
Max Green Setting (Gmax), s	* 5.8	* 83		* 21	* 12	* 77		9.0
Max Q Clear Time (g_c+I1), s	3.5	2.0		15.0	5.5	2.0		7.9
Green Ext Time (p_c), s	0.0	77.6		1.0	0.1	72.1		0.0

Intersection Summary	
HCM 2010 Ctrl Delay	10.3
HCM 2010 LOS	B

Notes

User approved pedestrian interval to be less than phase max green.

User approved volume balancing among the lanes for turning movement.

* HCM 2010 computational engine requires equal clearance times for the phases crossing the barrier.

Movement	EBL	EBT	EBR	WBL	WBT	WBR	NBL	NBT	NBR	SBL	SBT	SBR
Lane Configurations												
Volume (veh/h)	0	1291	734	449	1725	0	0	0	0	108	0	327
Number	5	2	12	1	6	16				7	4	14
Initial Q (Qb), veh	0	0	0	0	0	0				0	0	0
Ped-Bike Adj(A_pbT)	1.00		1.00	1.00		1.00				1.00		1.00
Parking Bus, Adj	1.00	1.00	1.00	1.00	1.00	1.00				1.00	1.00	1.00
Adj Sat Flow, veh/h/ln	0	1810	1810	1810	1810	0				1810	0	1810
Adj Flow Rate, veh/h	0	1317	0	458	1760	0				110	0	334
Adj No. of Lanes	0	4	1	2	3	0				2	0	2
Peak Hour Factor	0.98	0.98	0.98	0.98	0.98	0.98				0.98	0.98	0.98
Percent Heavy Veh, %	0	5	5	5	5	0				5	0	5
Cap, veh/h	0	3468	857	697	3923	0				497	0	403
Arrive On Green	0.00	0.56	0.00	0.42	1.00	0.00				0.15	0.00	0.15
Sat Flow, veh/h	0	6478	1538	3343	5103	0				3343	0	2707
Grp Volume(v), veh/h	0	1317	0	458	1760	0				110	0	334
Grp Sat Flow(s),veh/h/ln	0	1556	1538	1672	1647	0				1672	0	1354
Q Serve(g_s), s	0.0	16.6	0.0	15.4	0.0	0.0				4.1	0.0	16.8
Cycle Q Clear(g_c), s	0.0	16.6	0.0	15.4	0.0	0.0				4.1	0.0	16.8
Prop In Lane	0.00		1.00	1.00		0.00				1.00		1.00
Lane Grp Cap(c), veh/h	0	3468	857	697	3923	0				497	0	403
V/C Ratio(X)	0.00	0.38	0.00	0.66	0.45	0.00				0.22	0.00	0.83
Avail Cap(c_a), veh/h	0	3468	857	697	3923	0				501	0	406
HCM Platoon Ratio	1.00	1.00	1.00	2.00	2.00	1.00				1.00	1.00	1.00
Upstream Filter(I)	0.00	0.55	0.00	0.83	0.83	0.00				1.00	0.00	1.00
Uniform Delay (d), s/veh	0.0	17.4	0.0	36.8	0.0	0.0				52.4	0.0	57.9
Incr Delay (d2), s/veh	0.0	0.2	0.0	2.5	0.3	0.0				0.2	0.0	13.3
Initial Q Delay(d3),s/veh	0.0	0.0	0.0	0.0	0.0	0.0				0.0	0.0	0.0
%ile BackOfQ(-26165%),veh/ln	0.0	7.2	0.0	7.2	0.1	0.0				1.9	0.0	7.0
LnGrp Delay(d),s/veh	0.0	17.6	0.0	39.4	0.3	0.0				52.7	0.0	71.2
LnGrp LOS		B		D	A					D		E
Approach Vol, veh/h		1317			2218						444	
Approach Delay, s/veh		17.6			8.4						66.6	
Approach LOS		B			A						E	

Timer	1	2	3	4	5	6	7	8
Assigned Phs	1	2		4		6		
Phs Duration (G+Y+Rc), s	33.2	82.0		24.8		115.2		
Change Period (Y+Rc), s	7.5	6.5		6.0		7.5		
Max Green Setting (Gmax), s	25.5	75.5		19.0		107.5		
Max Q Clear Time (g_c+I1), s	17.4	18.6		18.8		2.0		
Green Ext Time (p_c), s	7.1	12.9		0.1		40.1		

Intersection Summary	
HCM 2010 Ctrl Delay	17.9
HCM 2010 LOS	B

Movement	EBL	EBT	EBR	WBL	WBT	WBR	NBL	NBT	NBR	SBL	SBT	SBR
Lane Configurations												
Volume (veh/h)	340	1056	0	0	1286	123	885	0	516	0	0	0
Number	5	2	12	1	6	16	3	8	18			
Initial Q (Qb), veh	0	0	0	0	0	0	0	0	0			
Ped-Bike Adj(A_pbT)	1.00		1.00	1.00		1.00	1.00		1.00			
Parking Bus, Adj	1.00	1.00	1.00	1.00	1.00	1.00	1.00	1.00	1.00			
Adj Sat Flow, veh/h/ln	1810	1810	0	0	1810	1810	1810	0	1810			
Adj Flow Rate, veh/h	343	1067	0	0	1299	0	894	0	521			
Adj No. of Lanes	2	2	0	0	4	1	3	0	2			
Peak Hour Factor	0.99	0.99	0.99	0.99	0.99	0.99	0.99	0.99	0.99			
Percent Heavy Veh, %	5	5	0	0	5	5	5	0	5			
Cap, veh/h	469	2350	0	0	3205	792	1239	0	690			
Arrive On Green	0.09	0.46	0.00	0.00	0.51	0.00	0.25	0.00	0.25			
Sat Flow, veh/h	3343	3529	0	0	6478	1538	4860	0	2707			
Grp Volume(v), veh/h	343	1067	0	0	1299	0	894	0	521			
Grp Sat Flow(s),veh/h/ln	1672	1719	0	0	1556	1538	1620	0	1354			
Q Serve(g_s), s	14.0	29.7	0.0	0.0	17.9	0.0	23.5	0.0	24.9			
Cycle Q Clear(g_c), s	14.0	29.7	0.0	0.0	17.9	0.0	23.5	0.0	24.9			
Prop In Lane	1.00		0.00	0.00		1.00	1.00		1.00			
Lane Grp Cap(c), veh/h	469	2350	0	0	3205	792	1239	0	690			
V/C Ratio(X)	0.73	0.45	0.00	0.00	0.41	0.00	0.72	0.00	0.75			
Avail Cap(c_a), veh/h	693	2350	0	0	3205	792	1611	0	897			
HCM Platoon Ratio	0.67	0.67	1.00	1.00	1.00	1.00	1.00	1.00	1.00			
Upstream Filter(I)	0.94	0.94	0.00	0.00	1.00	0.00	1.00	0.00	1.00			
Uniform Delay (d), s/veh	60.9	20.1	0.0	0.0	20.8	0.0	47.6	0.0	48.1			
Incr Delay (d2), s/veh	2.1	0.6	0.0	0.0	0.4	0.0	1.1	0.0	2.7			
Initial Q Delay(d3),s/veh	0.0	0.0	0.0	0.0	0.0	0.0	0.0	0.0	0.0			
%ile BackOfQ(-26165%),veh/ln	6.6	14.3	0.0	0.0	7.8	0.0	10.6	0.0	9.6			
LnGrp Delay(d),s/veh	63.0	20.7	0.0	0.0	21.2	0.0	48.7	0.0	50.8			
LnGrp LOS	E	C			C		D		D			
Approach Vol, veh/h		1410			1299			1415				
Approach Delay, s/veh		31.0			21.2			49.5				
Approach LOS		C			C			D				

Timer	1	2	3	4	5	6	7	8
Assigned Phs		2			5	6		8
Phs Duration (G+Y+Rc), s		99.7			23.6	76.1		40.3
Change Period (Y+Rc), s		6.4			6.6	6.4		6.6
Max Green Setting (Gmax), s		82.6			26.4	49.6		44.4
Max Q Clear Time (g_c+I1), s		31.7			16.0	19.9		26.9
Green Ext Time (p_c), s		38.3			1.0	24.8		6.8

Intersection Summary	
HCM 2010 Ctrl Delay	34.2
HCM 2010 LOS	C

Movement	EBL	EBT	EBR	WBL	WBT	WBR	NBL	NBT	NBR	SBL	SBT	SBR
Lane Configurations												
Volume (veh/h)	90	869	201	285	1229	418	538	653	523	471	403	113
Number	5	2	12	1	6	16	3	8	18	7	4	14
Initial Q (Qb), veh	0	0	0	0	0	0	0	0	0	0	0	0
Ped-Bike Adj(A_pbT)	1.00		1.00	1.00		1.00	1.00		1.00	1.00		1.00
Parking Bus, Adj	1.00	1.00	1.00	1.00	1.00	1.00	1.00	1.00	1.00	1.00	1.00	1.00
Adj Sat Flow, veh/h/ln	1827	1827	1827	1827	1827	1827	1827	1827	1827	1827	1827	1900
Adj Flow Rate, veh/h	91	878	0	288	1241	0	543	660	0	476	407	0
Adj No. of Lanes	1	2	1	2	2	1	2	2	1	2	2	0
Peak Hour Factor	0.99	0.99	0.99	0.99	0.99	0.99	0.99	0.99	0.99	0.99	0.99	0.99
Percent Heavy Veh, %	4	4	4	4	4	4	4	4	4	4	4	4
Cap, veh/h	220	1400	598	361	1597	687	624	783	350	506	662	0
Arrive On Green	0.05	0.40	0.00	0.14	0.61	0.00	0.18	0.23	0.00	0.15	0.19	0.00
Sat Flow, veh/h	1740	3471	1553	3375	3471	1553	3375	3471	1553	3375	3563	0
Grp Volume(v), veh/h	91	878	0	288	1241	0	543	660	0	476	407	0
Grp Sat Flow(s),veh/h/ln	1740	1736	1553	1688	1736	1553	1688	1736	1553	1688	1736	0
Q Serve(g_s), s	4.3	28.3	0.0	11.6	37.0	0.0	21.9	25.5	0.0	19.5	15.0	0.0
Cycle Q Clear(g_c), s	4.3	28.3	0.0	11.6	37.0	0.0	21.9	25.5	0.0	19.5	15.0	0.0
Prop In Lane	1.00		1.00	1.00		1.00	1.00		1.00	1.00		0.00
Lane Grp Cap(c), veh/h	220	1400	598	361	1597	687	624	783	350	506	662	0
V/C Ratio(X)	0.41	0.63	0.00	0.80	0.78	0.00	0.87	0.84	0.00	0.94	0.61	0.00
Avail Cap(c_a), veh/h	220	1400	598	362	1597	687	723	1017	455	506	793	0
HCM Platoon Ratio	1.00	1.00	1.00	1.33	1.33	1.33	1.00	1.00	1.00	1.00	1.00	1.00
Upstream Filter(I)	1.00	1.00	0.00	1.00	1.00	0.00	1.00	1.00	0.00	1.00	1.00	0.00
Uniform Delay (d), s/veh	26.7	33.4	0.0	58.6	21.9	0.0	55.4	51.8	0.0	58.9	51.9	0.0
Incr Delay (d2), s/veh	0.5	2.1	0.0	11.0	3.8	0.0	9.1	4.1	0.0	25.5	0.4	0.0
Initial Q Delay(d3),s/veh	0.0	0.0	0.0	0.0	0.0	0.0	0.0	0.0	0.0	0.0	0.0	0.0
%ile BackOfQ(-26165%),veh/ln	2.1	14.0	0.0	5.9	18.3	0.0	11.0	12.6	0.0	10.9	7.3	0.0
LnGrp Delay(d),s/veh	27.1	35.5	0.0	69.6	25.6	0.0	64.5	56.0	0.0	84.4	52.4	0.0
LnGrp LOS	C	D		E	C		E	E		F	D	
Approach Vol, veh/h		969			1529			1203			883	
Approach Delay, s/veh		34.7			33.9			59.8			69.6	
Approach LOS		C			C			E			E	

Timer	1	2	3	4	5	6	7	8
Assigned Phs	1	2	3	4	5	6	7	8
Phs Duration (G+Y+Rc), s	19.0	60.4	29.9	30.7	11.0	68.4	25.0	35.6
Change Period (Y+Rc), s	5.4	6.5	* 5.2	5.6	* 5.2	6.5	* 5.2	5.6
Max Green Setting (Gmax), s	13.6	44.5	* 29	30.4	* 5.8	52.5	* 20	39.4
Max Q Clear Time (g_c+I1), s	13.6	30.3	23.9	17.0	6.3	39.0	21.5	27.5
Green Ext Time (p_c), s	0.0	12.4	0.8	2.6	0.0	11.8	0.0	2.5

Intersection Summary	
HCM 2010 Ctrl Delay	47.8
HCM 2010 LOS	D

Notes

* HCM 2010 computational engine requires equal clearance times for the phases crossing the barrier.

Movement	EBL	EBT	EBR	WBL	WBT	WBR	NBL	NBT	NBR	SBL	SBT	SBR
Lane Configurations												
Volume (veh/h)	73	1786	11	50	1834	329	28	15	125	391	14	40
Number	5	2	12	1	6	16	3	8	18	7	4	14
Initial Q (Qb), veh	0	0	0	0	0	0	0	0	0	0	0	0
Ped-Bike Adj(A_pbT)	1.00		1.00	1.00		1.00	1.00		1.00	1.00		1.00
Parking Bus, Adj	1.00	1.00	1.00	1.00	1.00	1.00	1.00	1.00	1.00	1.00	1.00	1.00
Adj Sat Flow, veh/h/ln	1827	1827	1900	1827	1827	1827	1900	1827	1827	1827	1827	1827
Adj Flow Rate, veh/h	75	1841	11	52	1891	339	29	15	129	413	0	41
Adj No. of Lanes	1	2	0	1	3	1	0	1	1	2	0	1
Peak Hour Factor	0.97	0.97	0.97	0.97	0.97	0.97	0.97	0.97	0.97	0.97	0.97	0.97
Percent Heavy Veh, %	4	4	4	4	4	4	4	4	4	4	4	4
Cap, veh/h	229	2232	13	175	3132	975	83	43	111	501	0	224
Arrive On Green	0.04	0.63	0.62	0.08	1.00	1.00	0.07	0.07	0.07	0.14	0.00	0.14
Sat Flow, veh/h	1740	3538	21	1740	4988	1553	1166	603	1553	3480	0	1553
Grp Volume(v), veh/h	75	902	950	52	1891	339	44	0	129	413	0	41
Grp Sat Flow(s),veh/h/ln	1740	1736	1823	1740	1663	1553	1769	0	1553	1740	0	1553
Q Serve(g_s), s	2.1	56.0	56.2	1.4	0.0	0.0	3.3	0.0	10.0	16.1	0.0	3.3
Cycle Q Clear(g_c), s	2.1	56.0	56.2	1.4	0.0	0.0	3.3	0.0	10.0	16.1	0.0	3.3
Prop In Lane	1.00		0.01	1.00		1.00	0.66		1.00	1.00		1.00
Lane Grp Cap(c), veh/h	229	1095	1150	175	3132	975	126	0	111	501	0	224
V/C Ratio(X)	0.33	0.82	0.83	0.30	0.60	0.35	0.35	0.00	1.16	0.82	0.00	0.18
Avail Cap(c_a), veh/h	255	1095	1150	193	3132	975	126	0	111	577	0	257
HCM Platoon Ratio	1.00	1.00	1.00	2.00	2.00	2.00	1.00	1.00	1.00	1.00	1.00	1.00
Upstream Filter(I)	1.00	1.00	1.00	0.82	0.82	0.82	1.00	0.00	1.00	1.00	0.00	1.00
Uniform Delay (d), s/veh	8.2	19.9	19.9	21.3	0.0	0.0	61.9	0.0	65.0	58.2	0.0	52.7
Incr Delay (d2), s/veh	0.3	7.1	6.8	0.3	0.7	0.8	0.6	0.0	135.9	8.5	0.0	0.4
Initial Q Delay(d3),s/veh	0.0	0.0	0.0	0.0	0.0	0.0	0.0	0.0	0.0	0.0	0.0	0.0
%ile BackOfQ(-26165%),veh/ln	1.0	28.7	30.1	1.0	0.2	0.2	1.6	0.0	8.5	8.3	0.0	1.4
LnGrp Delay(d),s/veh	8.5	27.0	26.7	21.6	0.7	0.8	62.5	0.0	200.9	66.7	0.0	53.1
LnGrp LOS	A	C	C	C	A	A	E		F	E		D
Approach Vol, veh/h		1927			2282			173			454	
Approach Delay, s/veh		26.1			1.2			165.7			65.5	
Approach LOS		C			A			F			E	

Timer	1	2	3	4	5	6	7	8
Assigned Phs	1	2		4	5	6		8
Phs Duration (G+Y+Rc), s	9.5	92.3		24.1	9.9	91.9		14.0
Change Period (Y+Rc), s	* 5.2	* 6		* 5.2	* 5.2	* 6		5.0
Max Green Setting (Gmax), s	* 5.8	* 82		* 22	* 6.8	* 81		9.0
Max Q Clear Time (g_c+I1), s	3.4	58.2		18.1	4.1	2.0		12.0
Green Ext Time (p_c), s	0.0	23.4		0.8	0.0	76.8		0.0

Intersection Summary	
HCM 2010 Ctrl Delay	23.1
HCM 2010 LOS	C

Notes

User approved pedestrian interval to be less than phase max green.

User approved volume balancing among the lanes for turning movement.

* HCM 2010 computational engine requires equal clearance times for the phases crossing the barrier.

Movement	EBL	EBT	EBR	WBL	WBT	WBR	NBL	NBT	NBR	SBL	SBT	SBR
Lane Configurations												
Volume (veh/h)	0	1158	1137	1136	1886	0	0	0	0	127	0	332
Number	5	2	12	1	6	16				7	4	14
Initial Q (Qb), veh	0	0	0	0	0	0				0	0	0
Ped-Bike Adj(A_pbT)	1.00		1.00	1.00		1.00				1.00		1.00
Parking Bus, Adj	1.00	1.00	1.00	1.00	1.00	1.00				1.00	1.00	1.00
Adj Sat Flow, veh/h/ln	0	1827	1845	1845	1827	0				1845	0	1845
Adj Flow Rate, veh/h	0	1206	0	1183	1965	0				132	0	346
Adj No. of Lanes	0	4	1	2	3	0				2	0	2
Peak Hour Factor	0.96	0.96	0.96	0.96	0.96	0.96				0.96	0.96	0.96
Percent Heavy Veh, %	0	4	3	3	4	0				3	0	3
Cap, veh/h	0	3322	829	974	4204	0				341	0	276
Arrive On Green	0.00	0.53	0.00	0.57	1.00	0.00				0.10	0.00	0.10
Sat Flow, veh/h	0	6540	1568	3408	5152	0				3408	0	2760
Grp Volume(v), veh/h	0	1206	0	1183	1965	0				132	0	346
Grp Sat Flow(s),veh/h/ln	0	1571	1568	1704	1663	0				1704	0	1380
Q Serve(g_s), s	0.0	15.7	0.0	40.0	0.0	0.0				5.1	0.0	14.0
Cycle Q Clear(g_c), s	0.0	15.7	0.0	40.0	0.0	0.0				5.1	0.0	14.0
Prop In Lane	0.00		1.00	1.00		0.00				1.00		1.00
Lane Grp Cap(c), veh/h	0	3322	829	974	4204	0				341	0	276
V/C Ratio(X)	0.00	0.36	0.00	1.21	0.47	0.00				0.39	0.00	1.25
Avail Cap(c_a), veh/h	0	3322	829	974	4204	0				341	0	276
HCM Platoon Ratio	1.00	1.00	1.00	2.00	2.00	1.00				1.00	1.00	1.00
Upstream Filter(I)	0.00	0.45	0.00	0.54	0.54	0.00				1.00	0.00	1.00
Uniform Delay (d), s/veh	0.0	19.3	0.0	30.0	0.0	0.0				59.0	0.0	63.0
Incr Delay (d2), s/veh	0.0	0.1	0.0	102.1	0.2	0.0				0.7	0.0	140.4
Initial Q Delay(d3),s/veh	0.0	0.0	0.0	0.0	0.0	0.0				0.0	0.0	0.0
%ile BackOfQ(-26165%),veh/ln	0.0	6.8	0.0	32.2	0.1	0.0				2.4	0.0	10.7
LnGrp Delay(d),s/veh	0.0	19.4	0.0	132.1	0.2	0.0				59.7	0.0	203.4
LnGrp LOS		B		F	A					E		F
Approach Vol, veh/h		1206			3148						478	
Approach Delay, s/veh		19.4			49.8						163.7	
Approach LOS		B			D						F	

Timer	1	2	3	4	5	6	7	8
Assigned Phs	1	2		4		6		
Phs Duration (G+Y+Rc), s	44.0	78.0		18.0		122.0		
Change Period (Y+Rc), s	7.5	6.5		6.0		7.5		
Max Green Setting (Gmax), s	36.5	71.5		12.0		114.5		
Max Q Clear Time (g_c+I1), s	42.0	17.7		16.0		2.0		
Green Ext Time (p_c), s	0.0	11.1		0.0		83.4		

Intersection Summary	
HCM 2010 Ctrl Delay	53.5
HCM 2010 LOS	D

Notes

User approved pedestrian interval to be less than phase max green.

Movement	EBL	EBT	EBR	WBL	WBT	WBR	NBL	NBT	NBR	SBL	SBT	SBR
Lane Configurations												
Volume (veh/h)	442	846	0	0	2034	292	996	0	533	0	0	0
Number	5	2	12	1	6	16	3	8	18			
Initial Q (Qb), veh	0	0	0	0	0	0	0	0	0			
Ped-Bike Adj(A_pbT)	1.00		1.00	1.00		1.00	1.00		1.00			
Parking Bus, Adj	1.00	1.00	1.00	1.00	1.00	1.00	1.00	1.00	1.00			
Adj Sat Flow, veh/h/ln	1845	1827	0	0	1827	1845	1845	0	1845			
Adj Flow Rate, veh/h	475	910	0	0	2187	0	1071	0	573			
Adj No. of Lanes	2	2	0	0	4	1	3	0	2			
Peak Hour Factor	0.93	0.93	0.93	0.93	0.93	0.93	0.93	0.93	0.93			
Percent Heavy Veh, %	3	4	0	0	4	3	3	0	3			
Cap, veh/h	582	2356	0	0	3012	752	1288	0	717			
Arrive On Green	0.23	0.90	0.00	0.00	0.48	0.00	0.26	0.00	0.26			
Sat Flow, veh/h	3408	3563	0	0	6540	1568	4954	0	2760			
Grp Volume(v), veh/h	475	910	0	0	2187	0	1071	0	573			
Grp Sat Flow(s),veh/h/ln	1704	1736	0	0	1571	1568	1651	0	1380			
Q Serve(g_s), s	18.5	5.5	0.0	0.0	38.9	0.0	28.6	0.0	27.2			
Cycle Q Clear(g_c), s	18.5	5.5	0.0	0.0	38.9	0.0	28.6	0.0	27.2			
Prop In Lane	1.00		0.00	0.00		1.00	1.00		1.00			
Lane Grp Cap(c), veh/h	582	2356	0	0	3012	752	1288	0	717			
V/C Ratio(X)	0.82	0.39	0.00	0.00	0.73	0.00	0.83	0.00	0.80			
Avail Cap(c_a), veh/h	657	2356	0	0	3012	752	1359	0	757			
HCM Platoon Ratio	1.33	1.33	1.00	1.00	1.00	1.00	1.00	1.00	1.00			
Upstream Filter(I)	0.94	0.94	0.00	0.00	1.00	0.00	1.00	0.00	1.00			
Uniform Delay (d), s/veh	52.0	2.5	0.0	0.0	29.1	0.0	48.9	0.0	48.4			
Incr Delay (d2), s/veh	6.7	0.5	0.0	0.0	1.6	0.0	4.4	0.0	5.8			
Initial Q Delay(d3),s/veh	0.0	0.0	0.0	0.0	0.0	0.0	0.0	0.0	0.0			
%ile BackOfQ(-26165%),veh/ln	9.3	2.5	0.0	0.0	17.2	0.0	13.6	0.0	10.9			
LnGrp Delay(d),s/veh	58.7	2.9	0.0	0.0	30.7	0.0	53.3	0.0	54.2			
LnGrp LOS	E	A			C		D		D			
Approach Vol, veh/h		1385			2187			1644				
Approach Delay, s/veh		22.1			30.7			53.6				
Approach LOS		C			C			D				

Timer	1	2	3	4	5	6	7	8
Assigned Phs		2			5	6		8
Phs Duration (G+Y+Rc), s		99.0			27.9	71.1		41.0
Change Period (Y+Rc), s		6.4			6.6	6.4		6.6
Max Green Setting (Gmax), s		90.6			24.4	59.6		36.4
Max Q Clear Time (g_c+I1), s		7.5			20.5	40.9		30.6
Green Ext Time (p_c), s		72.7			0.8	18.1		3.8

Intersection Summary	
HCM 2010 Ctrl Delay	35.6
HCM 2010 LOS	D

Queues

1: Westside Pkwy/Deerfield Pkwy & Windward Pkwy

3/4/2015

Lane Group	EBL	EBT	EBR	WBL	WBT	WBR	NBL	NBT	NBR	SBL	SBT
Lane Group Flow (vph)	150	955	342	707	785	502	265	433	344	391	793
v/c Ratio	0.45	0.87	0.57	0.93	0.48	0.55	0.94	0.65	0.60	0.87	0.95
Control Delay	20.4	51.5	19.6	80.6	24.6	11.7	99.1	53.7	9.3	74.5	68.9
Queue Delay	0.0	0.0	0.0	0.0	0.0	0.0	0.0	0.0	0.0	0.0	0.0
Total Delay	20.4	51.5	19.6	80.6	24.6	11.7	99.1	53.7	9.3	74.5	68.9
Queue Length 50th (ft)	56	401	99	327	166	77	116	179	0	168	344
Queue Length 95th (ft)	90	#502	201	#425	270	208	#202	237	88	#248	#471
Internal Link Dist (ft)		1220			463			1762			975
Turn Bay Length (ft)	110		200	325		250	350		200	200	
Base Capacity (vph)	337	1100	601	769	1631	917	282	666	575	461	840
Starvation Cap Reductn	0	0	0	0	0	0	0	0	0	0	0
Spillback Cap Reductn	0	0	0	0	0	0	0	0	0	0	0
Storage Cap Reductn	0	0	0	0	0	0	0	0	0	0	0
Reduced v/c Ratio	0.45	0.87	0.57	0.92	0.48	0.55	0.94	0.65	0.60	0.85	0.94

Intersection Summary

95th percentile volume exceeds capacity, queue may be longer.
Queue shown is maximum after two cycles.

Movement	EBL	EBT	EBR	WBL	WBT	WBR	NBL	NBT	NBR	SBL	SBT	SBR
Lane Configurations												
Volume (veh/h)	144	917	328	679	754	482	254	416	330	375	688	73
Number	5	2	12	1	6	16	3	8	18	7	4	14
Initial Q (Qb), veh	0	0	0	0	0	0	0	0	0	0	0	0
Ped-Bike Adj(A_pbT)	1.00		1.00	1.00		1.00	1.00		1.00	1.00		1.00
Parking Bus, Adj	1.00	1.00	1.00	1.00	1.00	1.00	1.00	1.00	1.00	1.00	1.00	1.00
Adj Sat Flow, veh/h/ln	1810	1810	1810	1810	1810	1810	1810	1810	1810	1810	1810	1900
Adj Flow Rate, veh/h	150	955	0	707	785	0	265	433	0	391	717	0
Adj No. of Lanes	1	2	1	2	2	1	2	2	1	2	2	0
Peak Hour Factor	0.96	0.96	0.96	0.96	0.96	0.96	0.96	0.96	0.96	0.96	0.96	0.96
Percent Heavy Veh, %	5	5	5	5	5	5	5	5	5	5	5	5
Cap, veh/h	400	1125	474	765	1648	707	283	627	280	463	812	0
Arrive On Green	0.08	0.33	0.00	0.38	0.80	0.00	0.08	0.18	0.00	0.14	0.24	0.00
Sat Flow, veh/h	1723	3438	1538	3343	3438	1538	3343	3438	1538	3343	3529	0
Grp Volume(v), veh/h	150	955	0	707	785	0	265	433	0	391	717	0
Grp Sat Flow(s),veh/h/ln	1723	1719	1538	1672	1719	1538	1672	1719	1538	1672	1719	0
Q Serve(g_s), s	7.5	33.6	0.0	26.3	9.6	0.0	10.2	15.3	0.0	14.8	26.2	0.0
Cycle Q Clear(g_c), s	7.5	33.6	0.0	26.3	9.6	0.0	10.2	15.3	0.0	14.8	26.2	0.0
Prop In Lane	1.00		1.00	1.00		1.00	1.00		1.00	1.00		0.00
Lane Grp Cap(c), veh/h	400	1125	474	765	1648	707	283	627	280	463	812	0
V/C Ratio(X)	0.38	0.85	0.00	0.92	0.48	0.00	0.94	0.69	0.00	0.84	0.88	0.00
Avail Cap(c_a), veh/h	400	1125	474	772	1648	707	283	661	296	463	846	0
HCM Platoon Ratio	1.00	1.00	1.00	1.67	1.67	1.67	1.00	1.00	1.00	1.00	1.00	1.00
Upstream Filter(I)	1.00	1.00	0.00	1.00	1.00	0.00	1.00	1.00	0.00	1.00	1.00	0.00
Uniform Delay (d), s/veh	26.1	40.7	0.0	39.1	7.7	0.0	59.2	49.7	0.0	54.6	47.9	0.0
Incr Delay (d2), s/veh	0.2	8.0	0.0	16.4	1.0	0.0	36.5	2.3	0.0	12.8	10.1	0.0
Initial Q Delay(d3),s/veh	0.0	0.0	0.0	0.0	0.0	0.0	0.0	0.0	0.0	0.0	0.0	0.0
%ile BackOfQ(-26165%),veh/ln	3.6	17.2	0.0	13.8	4.6	0.0	6.2	7.5	0.0	7.7	13.6	0.0
LnGrp Delay(d),s/veh	26.3	48.8	0.0	55.4	8.7	0.0	95.6	52.0	0.0	67.4	58.0	0.0
LnGrp LOS	C	D		E	A		F	D		E	E	
Approach Vol, veh/h		1105			1492			698			1108	
Approach Delay, s/veh		45.7			30.9			68.6			61.3	
Approach LOS		D			C			E			E	

Timer	1	2	3	4	5	6	7	8
Assigned Phs	1	2	3	4	5	6	7	8
Phs Duration (G+Y+Rc), s	33.8	46.5	15.0	34.7	14.0	66.3	22.0	27.7
Change Period (Y+Rc), s	5.4	6.5	* 5.2	5.6	* 5.2	6.5	* 5.2	5.6
Max Green Setting (Gmax), s	28.6	38.5	* 9.8	30.4	* 8.8	58.5	* 17	23.4
Max Q Clear Time (g_c+I1), s	28.3	35.6	12.2	28.2	9.5	11.6	16.8	17.3
Green Ext Time (p_c), s	0.1	2.6	0.0	0.9	0.0	25.7	0.0	2.0

Intersection Summary	
HCM 2010 Ctrl Delay	48.2
HCM 2010 LOS	D

Notes

* HCM 2010 computational engine requires equal clearance times for the phases crossing the barrier.

Lane Group	EBL	EBT	WBL	WBT	WBR	NBT	NBR	SBL	SBT	SBR
Lane Group Flow (vph)	97	1600	156	1948	373	21	27	114	118	25
v/c Ratio	0.50	0.73	0.62	0.59	0.33	0.23	0.14	0.64	0.65	0.09
Control Delay	29.5	5.0	21.4	11.6	3.4	64.4	1.6	71.6	72.4	0.7
Queue Delay	0.0	0.0	0.0	0.0	0.0	0.0	0.0	0.0	0.0	0.0
Total Delay	29.5	5.0	21.4	11.6	3.4	64.4	1.6	71.6	72.4	0.7
Queue Length 50th (ft)	26	62	41	331	58	17	0	96	101	0
Queue Length 95th (ft)	m50	116	m108	393	89	45	0	164	170	0
Internal Link Dist (ft)		638		803		591			590	
Turn Bay Length (ft)	195		185		240					75
Base Capacity (vph)	219	2185	284	3283	1147	133	221	200	203	286
Starvation Cap Reductn	0	0	0	0	0	0	0	0	0	0
Spillback Cap Reductn	0	0	0	0	0	0	0	0	0	0
Storage Cap Reductn	0	0	0	0	0	0	0	0	0	0
Reduced v/c Ratio	0.44	0.73	0.55	0.59	0.33	0.16	0.12	0.57	0.58	0.09

Intersection Summary

m Volume for 95th percentile queue is metered by upstream signal.

Movement	EBL	EBT	EBR	WBL	WBT	WBR	NBL	NBT	NBR	SBL	SBT	SBR
Lane Configurations												
Volume (veh/h)	93	1492	44	150	1870	358	18	2	26	204	19	24
Number	5	2	12	1	6	16	3	8	18	7	4	14
Initial Q (Qb), veh	0	0	0	0	0	0	0	0	0	0	0	0
Ped-Bike Adj(A_pbT)	1.00		1.00	1.00		1.00	1.00		1.00	1.00		1.00
Parking Bus, Adj	1.00	1.00	1.00	1.00	1.00	1.00	1.00	1.00	1.00	1.00	1.00	1.00
Adj Sat Flow, veh/h/ln	1810	1810	1900	1810	1810	1810	1900	1810	1810	1810	1810	1810
Adj Flow Rate, veh/h	97	1554	46	156	1948	373	19	2	27	226	0	25
Adj No. of Lanes	1	2	0	1	3	1	0	1	1	2	0	1
Peak Hour Factor	0.96	0.96	0.96	0.96	0.96	0.96	0.96	0.96	0.96	0.96	0.96	0.96
Percent Heavy Veh, %	5	5	5	5	5	5	5	5	5	5	5	5
Cap, veh/h	211	2368	70	356	3455	1076	62	6	61	316	0	141
Arrive On Green	0.09	1.00	1.00	0.05	0.70	0.70	0.04	0.04	0.04	0.09	0.00	0.09
Sat Flow, veh/h	1723	3410	101	1723	4940	1538	1566	165	1538	3447	0	1538
Grp Volume(v), veh/h	97	782	818	156	1948	373	21	0	27	226	0	25
Grp Sat Flow(s),veh/h/ln	1723	1719	1792	1723	1647	1538	1731	0	1538	1723	0	1538
Q Serve(g_s), s	2.1	0.0	0.0	3.4	25.4	12.5	1.5	0.0	2.2	8.3	0.0	2.0
Cycle Q Clear(g_c), s	2.1	0.0	0.0	3.4	25.4	12.5	1.5	0.0	2.2	8.3	0.0	2.0
Prop In Lane	1.00		0.06	1.00		1.00	0.90		1.00	1.00		1.00
Lane Grp Cap(c), veh/h	211	1194	1244	356	3455	1076	68	0	61	316	0	141
V/C Ratio(X)	0.46	0.65	0.66	0.44	0.56	0.35	0.31	0.00	0.45	0.72	0.00	0.18
Avail Cap(c_a), veh/h	263	1194	1244	453	3455	1076	133	0	118	424	0	189
HCM Platoon Ratio	2.00	2.00	2.00	1.00	1.00	1.00	1.00	1.00	1.00	1.00	1.00	1.00
Upstream Filter(I)	1.00	1.00	1.00	0.74	0.74	0.74	1.00	0.00	1.00	1.00	0.00	1.00
Uniform Delay (d), s/veh	10.4	0.0	0.0	4.8	9.7	7.8	60.7	0.0	61.1	57.4	0.0	54.5
Incr Delay (d2), s/veh	0.6	2.8	2.7	0.2	0.5	0.7	0.9	0.0	1.9	3.7	0.0	0.6
Initial Q Delay(d3),s/veh	0.0	0.0	0.0	0.0	0.0	0.0	0.0	0.0	0.0	0.0	0.0	0.0
%ile BackOfQ(-26165%),veh/ln	1.6	0.9	0.9	1.6	11.5	5.5	0.8	0.0	1.0	4.1	0.0	0.9
LnGrp Delay(d),s/veh	10.9	2.8	2.7	5.1	10.2	8.4	61.7	0.0	63.0	61.1	0.0	55.1
LnGrp LOS	B	A	A	A	B	A	E		E	E		E
Approach Vol, veh/h		1697			2477			48			251	
Approach Delay, s/veh		3.2			9.6			62.4			60.5	
Approach LOS		A			A			E			E	

Timer	1	2	3	4	5	6	7	8
Assigned Phs	1	2		4	5	6		8
Phs Duration (G+Y+Rc), s	10.7	94.3		15.9	10.0	94.9		9.1
Change Period (Y+Rc), s	* 5.2	* 6		* 5.2	* 5.2	* 6		5.0
Max Green Setting (Gmax), s	* 13	* 72		* 15	* 8.8	* 76		9.0
Max Q Clear Time (g_c+I1), s	5.4	2.0		10.3	4.1	27.4		4.2
Green Ext Time (p_c), s	0.1	67.7		0.4	0.1	47.4		0.0

Intersection Summary	
HCM 2010 Ctrl Delay	10.6
HCM 2010 LOS	B

Notes

User approved pedestrian interval to be less than phase max green.

User approved volume balancing among the lanes for turning movement.

* HCM 2010 computational engine requires equal clearance times for the phases crossing the barrier.

Lane Group	EBT	EBR	WBL	WBT	SBL	SBR
Lane Group Flow (vph)	1270	500	331	1740	647	716
v/c Ratio	0.49	0.53	0.56	0.56	0.62	0.78
Control Delay	14.8	3.5	51.4	6.7	40.3	41.3
Queue Delay	0.0	0.0	0.0	0.1	0.1	0.0
Total Delay	14.8	3.5	51.4	6.8	40.4	41.3
Queue Length 50th (ft)	137	9	154	77	237	273
Queue Length 95th (ft)	215	120	204	198	276	328
Internal Link Dist (ft)	803			460		
Turn Bay Length (ft)		560			825	1000
Base Capacity (vph)	2609	941	595	3097	1243	1067
Starvation Cap Reductn	0	0	0	245	0	0
Spillback Cap Reductn	23	0	0	0	103	0
Storage Cap Reductn	0	0	0	0	0	0
Reduced v/c Ratio	0.49	0.53	0.56	0.61	0.57	0.67

Intersection Summary

Movement	EBL	EBT	EBR	WBL	WBT	WBR	NBL	NBT	NBR	SBL	SBT	SBR
Lane Configurations												
Volume (veh/h)	0	1232	485	321	1688	0	0	0	0	628	0	695
Number	5	2	12	1	6	16				7	4	14
Initial Q (Qb), veh	0	0	0	0	0	0				0	0	0
Ped-Bike Adj(A_pbT)	1.00		1.00	1.00		1.00				1.00		1.00
Parking Bus, Adj	1.00	1.00	1.00	1.00	1.00	1.00				1.00	1.00	1.00
Adj Sat Flow, veh/h/ln	0	1810	1827	1827	1810	0				1827	0	1827
Adj Flow Rate, veh/h	0	1270	0	331	1740	0				647	0	716
Adj No. of Lanes	0	4	1	2	3	0				2	0	2
Peak Hour Factor	0.97	0.97	0.97	0.97	0.97	0.97				0.97	0.97	0.97
Percent Heavy Veh, %	0	5	4	4	5	0				4	0	4
Cap, veh/h	0	2250	561	774	3071	0				1069	0	866
Arrive On Green	0.00	0.12	0.00	0.23	0.62	0.00				0.32	0.00	0.32
Sat Flow, veh/h	0	6478	1553	3375	5103	0				3375	0	2733
Grp Volume(v), veh/h	0	1270	0	331	1740	0				647	0	716
Grp Sat Flow(s),veh/h/ln	0	1556	1553	1688	1647	0				1688	0	1367
Q Serve(g_s), s	0.0	25.0	0.0	10.9	26.7	0.0				21.1	0.0	31.5
Cycle Q Clear(g_c), s	0.0	25.0	0.0	10.9	26.7	0.0				21.1	0.0	31.5
Prop In Lane	0.00		1.00	1.00		0.00				1.00		1.00
Lane Grp Cap(c), veh/h	0	2250	561	774	3071	0				1069	0	866
V/C Ratio(X)	0.00	0.56	0.00	0.43	0.57	0.00				0.61	0.00	0.83
Avail Cap(c_a), veh/h	0	2250	561	774	3071	0				1246	0	1009
HCM Platoon Ratio	1.00	0.33	0.33	1.00	1.00	1.00				1.00	1.00	1.00
Upstream Filter(I)	0.00	0.63	0.00	0.86	0.86	0.00				1.00	0.00	1.00
Uniform Delay (d), s/veh	0.0	47.6	0.0	42.8	14.4	0.0				37.5	0.0	41.1
Incr Delay (d2), s/veh	0.0	0.6	0.0	0.7	0.7	0.0				0.6	0.0	5.1
Initial Q Delay(d3),s/veh	0.0	0.0	0.0	0.0	0.0	0.0				0.0	0.0	0.0
%ile BackOfQ(-26165%),veh/ln	0.0	10.9	0.0	5.1	12.3	0.0				9.9	0.0	12.5
LnGrp Delay(d),s/veh	0.0	48.2	0.0	43.5	15.0	0.0				38.2	0.0	46.2
LnGrp LOS		D		D	B					D		D
Approach Vol, veh/h		1270			2071						1363	
Approach Delay, s/veh		48.2			19.6						42.4	
Approach LOS		D			B						D	

Timer	1	2	3	4	5	6	7	8
Assigned Phs	1	2		4		6		
Phs Duration (G+Y+Rc), s	33.8	51.0		45.2		84.8		
Change Period (Y+Rc), s	7.5	6.5		6.0		7.5		
Max Green Setting (Gmax), s	19.5	44.5		46.0		70.5		
Max Q Clear Time (g_c+I1), s	12.9	27.0		33.5		28.7		
Green Ext Time (p_c), s	5.7	8.2		5.7		24.0		

Intersection Summary	
HCM 2010 Ctrl Delay	33.9
HCM 2010 LOS	C

Lane Group	EBL	EBT	WBT	WBR	NBL	NBR
Lane Group Flow (vph)	311	1611	937	80	1136	1202
v/c Ratio	0.69	0.92	0.44	0.14	0.54	0.99
Control Delay	91.1	27.9	34.0	5.8	29.1	58.6
Queue Delay	0.0	0.4	0.0	0.0	0.0	0.0
Total Delay	91.1	28.3	34.0	5.8	29.1	58.6
Queue Length 50th (ft)	142	406	178	0	250	536
Queue Length 95th (ft)	189	#502	211	32	294	#719
Internal Link Dist (ft)		460	1167			
Turn Bay Length (ft)				350	800	600
Base Capacity (vph)	466	1745	2133	588	2085	1212
Starvation Cap Reductn	0	15	0	0	0	0
Spillback Cap Reductn	0	0	0	0	0	0
Storage Cap Reductn	0	0	0	0	0	0
Reduced v/c Ratio	0.67	0.93	0.44	0.14	0.54	0.99

Intersection Summary

95th percentile volume exceeds capacity, queue may be longer.
Queue shown is maximum after two cycles.

Movement	EBL	EBT	EBR	WBL	WBT	WBR	NBL	NBT	NBR	SBL	SBT	SBR
Lane Configurations												
Volume (veh/h)	302	1563	0	0	909	78	1102	0	1166	0	0	0
Number	5	2	12	1	6	16	3	8	18			
Initial Q (Qb), veh	0	0	0	0	0	0	0	0	0			
Ped-Bike Adj(A_pbT)	1.00		1.00	1.00		1.00	1.00		1.00			
Parking Bus, Adj	1.00	1.00	1.00	1.00	1.00	1.00	1.00	1.00	1.00			
Adj Sat Flow, veh/h/ln	1827	1810	0	0	1810	1827	1827	0	1827			
Adj Flow Rate, veh/h	311	1611	0	0	937	0	1136	0	1202			
Adj No. of Lanes	2	2	0	0	4	1	3	0	2			
Peak Hour Factor	0.97	0.97	0.97	0.97	0.97	0.97	0.97	0.97	0.97			
Percent Heavy Veh, %	4	5	0	0	5	4	4	0	4			
Cap, veh/h	415	1745	0	0	2204	550	2091	0	1165			
Arrive On Green	0.25	1.00	0.00	0.00	0.35	0.00	0.43	0.00	0.43			
Sat Flow, veh/h	3375	3529	0	0	6478	1553	4907	0	2733			
Grp Volume(v), veh/h	311	1611	0	0	937	0	1136	0	1202			
Grp Sat Flow(s),veh/h/ln	1688	1719	0	0	1556	1553	1636	0	1367			
Q Serve(g_s), s	11.1	0.0	0.0	0.0	14.9	0.0	22.5	0.0	55.4			
Cycle Q Clear(g_c), s	11.1	0.0	0.0	0.0	14.9	0.0	22.5	0.0	55.4			
Prop In Lane	1.00		0.00	0.00		1.00	1.00		1.00			
Lane Grp Cap(c), veh/h	415	1745	0	0	2204	550	2091	0	1165			
V/C Ratio(X)	0.75	0.92	0.00	0.00	0.43	0.00	0.54	0.00	1.03			
Avail Cap(c_a), veh/h	467	1745	0	0	2204	550	2091	0	1165			
HCM Platoon Ratio	2.00	2.00	1.00	1.00	1.00	1.00	1.00	1.00	1.00			
Upstream Filter(I)	0.83	0.83	0.00	0.00	1.00	0.00	1.00	0.00	1.00			
Uniform Delay (d), s/veh	47.2	0.0	0.0	0.0	31.9	0.0	27.9	0.0	37.3			
Incr Delay (d2), s/veh	4.9	8.3	0.0	0.0	0.6	0.0	0.3	0.0	34.9			
Initial Q Delay(d3),s/veh	0.0	0.0	0.0	0.0	0.0	0.0	0.0	0.0	0.0			
%ile BackOfQ(-26165%),veh/ln	5.4	2.0	0.0	0.0	6.5	0.0	10.2	0.0	26.5			
LnGrp Delay(d),s/veh	52.1	8.3	0.0	0.0	32.5	0.0	28.1	0.0	72.2			
LnGrp LOS	D	A			C		C		F			
Approach Vol, veh/h		1922			937			2338				
Approach Delay, s/veh		15.4			32.5			50.8				
Approach LOS		B			C			D				

Timer	1	2	3	4	5	6	7	8
Assigned Phs		2			5	6		8
Phs Duration (G+Y+Rc), s		70.0			20.0	50.0		60.0
Change Period (Y+Rc), s		6.4			6.6	6.4		6.6
Max Green Setting (Gmax), s		63.6			15.4	41.6		53.4
Max Q Clear Time (g_c+I1), s		2.0			13.1	16.9		57.4
Green Ext Time (p_c), s		48.8			0.3	22.3		0.0

Intersection Summary	
HCM 2010 Ctrl Delay	34.4
HCM 2010 LOS	C

Queues

1: Westside Pkwy/Deerfield Pkwy & Windward Pkwy

3/4/2015

Lane Group	EBL	EBT	EBR	WBL	WBT	WBR	NBL	NBT	NBR	SBL	SBT
Lane Group Flow (vph)	170	1304	372	246	1381	334	399	318	249	338	551
v/c Ratio	0.80	0.78	0.44	0.79	0.81	0.39	0.86	0.52	0.61	0.82	0.88
Control Delay	56.1	33.9	10.7	100.4	10.5	1.7	77.4	55.0	25.5	76.0	61.4
Queue Delay	0.0	0.0	0.0	0.0	0.0	0.0	0.0	0.0	0.0	0.0	0.0
Total Delay	56.1	33.9	10.7	100.4	10.5	1.7	77.4	55.0	25.5	76.0	61.4
Queue Length 50th (ft)	93	516	77	122	85	1	185	137	71	156	208
Queue Length 95th (ft)	#208	612	161	#183	136	0	#263	188	167	#221	#296
Internal Link Dist (ft)		1220			463			1762			975
Turn Bay Length (ft)	110		200	325		250	350		200	200	
Base Capacity (vph)	222	1681	847	313	1699	858	476	643	418	428	651
Starvation Cap Reductn	0	0	0	0	0	0	0	0	0	0	0
Spillback Cap Reductn	0	0	0	0	0	0	0	0	0	0	0
Storage Cap Reductn	0	0	0	0	0	0	0	0	0	0	0
Reduced v/c Ratio	0.77	0.78	0.44	0.79	0.81	0.39	0.84	0.49	0.60	0.79	0.85

Intersection Summary

95th percentile volume exceeds capacity, queue may be longer.
Queue shown is maximum after two cycles.

Movement	EBL	EBT	EBR	WBL	WBT	WBR	NBL	NBT	NBR	SBL	SBT	SBR
Lane Configurations												
Volume (veh/h)	167	1278	365	241	1353	327	391	312	244	331	313	227
Number	5	2	12	1	6	16	3	8	18	7	4	14
Initial Q (Qb), veh	0	0	0	0	0	0	0	0	0	0	0	0
Ped-Bike Adj(A_pbT)	1.00		1.00	1.00		1.00	1.00		1.00	1.00		1.00
Parking Bus, Adj	1.00	1.00	1.00	1.00	1.00	1.00	1.00	1.00	1.00	1.00	1.00	1.00
Adj Sat Flow, veh/h/ln	1810	1810	1810	1810	1810	1810	1810	1810	1810	1810	1810	1900
Adj Flow Rate, veh/h	170	1304	0	246	1381	0	399	318	0	338	319	0
Adj No. of Lanes	1	2	1	2	2	1	2	2	1	2	2	0
Peak Hour Factor	0.98	0.98	0.98	0.98	0.98	0.98	0.98	0.98	0.98	0.98	0.98	0.98
Percent Heavy Veh, %	5	5	5	5	5	5	5	5	5	5	5	5
Cap, veh/h	367	1819	786	310	1903	824	468	486	218	409	426	0
Arrive On Green	0.07	0.53	0.00	0.19	1.00	0.00	0.14	0.14	0.00	0.12	0.12	0.00
Sat Flow, veh/h	1723	3438	1538	3343	3438	1538	3343	3438	1538	3343	3529	0
Grp Volume(v), veh/h	170	1304	0	246	1381	0	399	318	0	338	319	0
Grp Sat Flow(s),veh/h/ln	1723	1719	1538	1672	1719	1538	1672	1719	1538	1672	1719	0
Q Serve(g_s), s	6.3	40.3	0.0	9.8	0.0	0.0	16.3	12.3	0.0	13.8	12.5	0.0
Cycle Q Clear(g_c), s	6.3	40.3	0.0	9.8	0.0	0.0	16.3	12.3	0.0	13.8	12.5	0.0
Prop In Lane	1.00		1.00	1.00		1.00	1.00		1.00	1.00		0.00
Lane Grp Cap(c), veh/h	367	1819	786	310	1903	824	468	486	218	409	426	0
V/C Ratio(X)	0.46	0.72	0.00	0.79	0.73	0.00	0.85	0.65	0.00	0.83	0.75	0.00
Avail Cap(c_a), veh/h	409	1819	786	310	1903	824	478	643	288	430	594	0
HCM Platoon Ratio	1.00	1.00	1.00	2.00	2.00	2.00	1.00	1.00	1.00	1.00	1.00	1.00
Upstream Filter(I)	1.00	1.00	0.00	1.00	1.00	0.00	1.00	1.00	0.00	1.00	1.00	0.00
Uniform Delay (d), s/veh	13.2	25.0	0.0	55.7	0.0	0.0	58.8	56.9	0.0	60.0	59.2	0.0
Incr Delay (d2), s/veh	0.3	2.5	0.0	12.1	2.5	0.0	13.0	0.6	0.0	11.1	1.8	0.0
Initial Q Delay(d3),s/veh	0.0	0.0	0.0	0.0	0.0	0.0	0.0	0.0	0.0	0.0	0.0	0.0
%ile BackOfQ(-26165%),veh/ln	3.0	19.6	0.0	5.0	0.6	0.0	8.4	5.9	0.0	7.0	6.1	0.0
LnGrp Delay(d),s/veh	13.5	27.5	0.0	67.8	2.5	0.0	71.8	57.4	0.0	71.1	61.1	0.0
LnGrp LOS	B	C		E	A		E	E		E	E	
Approach Vol, veh/h		1474			1627			717			657	
Approach Delay, s/veh		25.9			12.3			65.4			66.2	
Approach LOS		C			B			E			E	

Timer	1	2	3	4	5	6	7	8
Assigned Phs	1	2	3	4	5	6	7	8
Phs Duration (G+Y+Rc), s	17.0	78.1	23.6	21.3	13.6	81.5	21.1	23.8
Change Period (Y+Rc), s	5.4	6.5	* 5.2	5.6	* 5.2	6.5	* 5.2	5.6
Max Green Setting (Gmax), s	11.6	64.3	* 19	22.6	* 12	64.3	* 17	24.6
Max Q Clear Time (g_c+I1), s	11.8	42.3	18.3	14.5	8.3	2.0	15.8	14.3
Green Ext Time (p_c), s	0.0	20.4	0.1	1.2	0.1	51.3	0.1	1.3

Intersection Summary	
HCM 2010 Ctrl Delay	33.2
HCM 2010 LOS	C

Notes

* HCM 2010 computational engine requires equal clearance times for the phases crossing the barrier.

Lane Group	EBL	EBT	WBL	WBT	WBR	NBT	NBR	SBL	SBT	SBR
Lane Group Flow (vph)	127	1786	59	1784	286	56	66	166	168	98
v/c Ratio	0.60	0.80	0.39	0.59	0.27	0.52	0.29	0.74	0.75	0.29
Control Delay	34.8	14.6	19.1	13.7	4.2	80.8	3.1	77.5	77.8	4.2
Queue Delay	0.0	0.0	0.0	0.0	0.0	0.0	0.0	0.0	0.0	0.0
Total Delay	34.8	14.6	19.1	13.7	4.2	80.8	3.1	77.5	77.8	4.2
Queue Length 50th (ft)	62	295	17	289	33	50	0	152	154	0
Queue Length 95th (ft)	m99	348	m33	330	73	97	0	236	238	16
Internal Link Dist (ft)		638		803		591			590	
Turn Bay Length (ft)	195		185		240					75
Base Capacity (vph)	258	2235	153	3035	1048	124	244	256	258	362
Starvation Cap Reductn	0	0	0	0	0	0	0	0	0	0
Spillback Cap Reductn	0	0	0	0	0	0	0	0	0	0
Storage Cap Reductn	0	0	0	0	0	0	0	0	0	0
Reduced v/c Ratio	0.49	0.80	0.39	0.59	0.27	0.45	0.27	0.65	0.65	0.27

Intersection Summary

m Volume for 95th percentile queue is metered by upstream signal.

Movement	EBL	EBT	EBR	WBL	WBT	WBR	NBL	NBT	NBR	SBL	SBT	SBR
Lane Configurations												
Volume (veh/h)	123	1670	62	57	1730	277	44	11	64	309	15	95
Number	5	2	12	1	6	16	3	8	18	7	4	14
Initial Q (Qb), veh	0	0	0	0	0	0	0	0	0	0	0	0
Ped-Bike Adj(A_pbT)	1.00		1.00	1.00		1.00	1.00		1.00	1.00		1.00
Parking Bus, Adj	1.00	1.00	1.00	1.00	1.00	1.00	1.00	1.00	1.00	1.00	1.00	1.00
Adj Sat Flow, veh/h/ln	1810	1810	1900	1810	1810	1810	1900	1810	1810	1810	1810	1810
Adj Flow Rate, veh/h	127	1722	64	59	1784	286	45	11	66	330	0	98
Adj No. of Lanes	1	2	0	1	3	1	0	1	1	2	0	1
Peak Hour Factor	0.97	0.97	0.97	0.97	0.97	0.97	0.97	0.97	0.97	0.97	0.97	0.97
Percent Heavy Veh, %	5	5	5	5	5	5	5	5	5	5	5	5
Cap, veh/h	260	2228	82	287	3217	1002	88	22	97	424	0	189
Arrive On Green	0.10	1.00	1.00	0.08	1.00	1.00	0.06	0.06	0.06	0.12	0.00	0.12
Sat Flow, veh/h	1723	3381	125	1723	4940	1538	1398	342	1538	3447	0	1538
Grp Volume(v), veh/h	127	872	914	59	1784	286	56	0	66	330	0	98
Grp Sat Flow(s),veh/h/ln	1723	1719	1787	1723	1647	1538	1740	0	1538	1723	0	1538
Q Serve(g_s), s	3.5	0.0	0.0	1.5	0.0	0.0	4.4	0.0	5.9	13.0	0.0	8.4
Cycle Q Clear(g_c), s	3.5	0.0	0.0	1.5	0.0	0.0	4.4	0.0	5.9	13.0	0.0	8.4
Prop In Lane	1.00		0.07	1.00		1.00	0.80		1.00	1.00		1.00
Lane Grp Cap(c), veh/h	260	1133	1178	287	3217	1002	110	0	97	424	0	189
V/C Ratio(X)	0.49	0.77	0.78	0.21	0.55	0.29	0.51	0.00	0.68	0.78	0.00	0.52
Avail Cap(c_a), veh/h	349	1133	1178	303	3217	1002	124	0	110	542	0	242
HCM Platoon Ratio	2.00	2.00	2.00	2.00	2.00	2.00	1.00	1.00	1.00	1.00	1.00	1.00
Upstream Filter(I)	1.00	1.00	1.00	0.86	0.86	0.86	1.00	0.00	1.00	1.00	0.00	1.00
Uniform Delay (d), s/veh	6.7	0.0	0.0	6.8	0.0	0.0	63.5	0.0	64.2	59.5	0.0	57.5
Incr Delay (d2), s/veh	0.5	5.1	5.0	0.1	0.6	0.6	1.4	0.0	9.8	5.5	0.0	2.2
Initial Q Delay(d3),s/veh	0.0	0.0	0.0	0.0	0.0	0.0	0.0	0.0	0.0	0.0	0.0	0.0
%ile BackOfQ(-26165%),veh/ln	1.6	1.6	1.7	0.7	0.2	0.2	2.1	0.0	2.8	6.5	0.0	3.7
LnGrp Delay(d),s/veh	7.3	5.1	5.0	6.9	0.6	0.6	64.9	0.0	74.0	65.0	0.0	59.7
LnGrp LOS	A	A	A	A	A	A	E		E	E		E
Approach Vol, veh/h		1913			2129			122			428	
Approach Delay, s/veh		5.2			0.8			69.8			63.8	
Approach LOS		A			A			E			E	

Timer	1	2	3	4	5	6	7	8
Assigned Phs	1	2		4	5	6		8
Phs Duration (G+Y+Rc), s	9.7	96.3		21.2	10.8	95.2		12.8
Change Period (Y+Rc), s	* 5.2	* 6		* 5.2	* 5.2	* 6		5.0
Max Green Setting (Gmax), s	* 5.8	* 83		* 21	* 13	* 76		9.0
Max Q Clear Time (g_c+I1), s	3.5	2.0		15.0	5.5	2.0		7.9
Green Ext Time (p_c), s	0.0	77.8		1.0	0.1	71.3		0.0

Intersection Summary	
HCM 2010 Ctrl Delay	10.3
HCM 2010 LOS	B

Notes

User approved pedestrian interval to be less than phase max green.

User approved volume balancing among the lanes for turning movement.

* HCM 2010 computational engine requires equal clearance times for the phases crossing the barrier.

Lane Group	EBT	EBR	WBL	WBT	SBL	SBR
Lane Group Flow (vph)	1326	756	458	1768	110	341
v/c Ratio	0.37	0.69	0.66	0.44	0.25	0.76
Control Delay	10.8	4.8	31.4	2.9	55.0	53.0
Queue Delay	0.0	0.7	0.0	0.4	0.0	0.0
Total Delay	10.8	5.5	31.4	3.3	55.0	53.0
Queue Length 50th (ft)	113	61	194	55	46	122
Queue Length 95th (ft)	113	60	58	59	75	183
Internal Link Dist (ft)	803			460		
Turn Bay Length (ft)		560			825	1000
Base Capacity (vph)	3566	1093	690	3994	500	488
Starvation Cap Reductn	0	105	0	1484	0	0
Spillback Cap Reductn	122	0	0	0	0	0
Storage Cap Reductn	0	0	0	0	0	0
Reduced v/c Ratio	0.39	0.77	0.66	0.70	0.22	0.70

Intersection Summary

Movement	EBL	EBT	EBR	WBL	WBT	WBR	NBL	NBT	NBR	SBL	SBT	SBR
Lane Configurations												
Volume (veh/h)	0	1299	741	449	1733	0	0	0	0	108	0	334
Number	5	2	12	1	6	16				7	4	14
Initial Q (Qb), veh	0	0	0	0	0	0				0	0	0
Ped-Bike Adj(A_pbT)	1.00		1.00	1.00		1.00				1.00		1.00
Parking Bus, Adj	1.00	1.00	1.00	1.00	1.00	1.00				1.00	1.00	1.00
Adj Sat Flow, veh/h/ln	0	1810	1810	1810	1810	0				1810	0	1810
Adj Flow Rate, veh/h	0	1326	0	458	1768	0				110	0	341
Adj No. of Lanes	0	4	1	2	3	0				2	0	2
Peak Hour Factor	0.98	0.98	0.98	0.98	0.98	0.98				0.98	0.98	0.98
Percent Heavy Veh, %	0	5	5	5	5	0				5	0	5
Cap, veh/h	0	3468	857	693	3917	0				501	0	406
Arrive On Green	0.00	1.00	0.00	0.41	1.00	0.00				0.15	0.00	0.15
Sat Flow, veh/h	0	6478	1538	3343	5103	0				3343	0	2707
Grp Volume(v), veh/h	0	1326	0	458	1768	0				110	0	341
Grp Sat Flow(s),veh/h/ln	0	1556	1538	1672	1647	0				1672	0	1354
Q Serve(g_s), s	0.0	0.0	0.0	15.5	0.0	0.0				4.0	0.0	17.2
Cycle Q Clear(g_c), s	0.0	0.0	0.0	15.5	0.0	0.0				4.0	0.0	17.2
Prop In Lane	0.00		1.00	1.00		0.00				1.00		1.00
Lane Grp Cap(c), veh/h	0	3468	857	693	3917	0				501	0	406
V/C Ratio(X)	0.00	0.38	0.00	0.66	0.45	0.00				0.22	0.00	0.84
Avail Cap(c_a), veh/h	0	3468	857	693	3917	0				501	0	406
HCM Platoon Ratio	1.00	2.00	2.00	2.00	2.00	1.00				1.00	1.00	1.00
Upstream Filter(I)	0.00	0.54	0.00	0.82	0.82	0.00				1.00	0.00	1.00
Uniform Delay (d), s/veh	0.0	0.0	0.0	37.0	0.0	0.0				52.3	0.0	57.9
Incr Delay (d2), s/veh	0.0	0.2	0.0	2.6	0.3	0.0				0.2	0.0	14.5
Initial Q Delay(d3),s/veh	0.0	0.0	0.0	0.0	0.0	0.0				0.0	0.0	0.0
%ile BackOfQ(-26165%),veh/ln	0.0	0.0	0.0	7.4	0.1	0.0				1.9	0.0	7.3
LnGrp Delay(d),s/veh	0.0	0.2	0.0	39.6	0.3	0.0				52.5	0.0	72.4
LnGrp LOS		A		D	A					D		E
Approach Vol, veh/h		1326			2226						451	
Approach Delay, s/veh		0.2			8.4						67.5	
Approach LOS		A			A						E	

Timer	1	2	3	4	5	6	7	8
Assigned Phs	1	2		4		6		
Phs Duration (G+Y+Rc), s	33.0	82.0		25.0		115.0		
Change Period (Y+Rc), s	7.5	6.5		6.0		7.5		
Max Green Setting (Gmax), s	25.5	75.5		19.0		107.5		
Max Q Clear Time (g_c+I1), s	17.5	2.0		19.2		2.0		
Green Ext Time (p_c), s	7.0	13.3		0.0		40.5		

Intersection Summary	
HCM 2010 Ctrl Delay	12.3
HCM 2010 LOS	B

Lane Group	EBL	EBT	WBT	WBR	NBL	NBR
Lane Group Flow (vph)	349	1069	1301	124	900	521
v/c Ratio	0.65	0.46	0.43	0.15	0.71	0.61
Control Delay	43.7	19.9	24.9	4.5	49.8	30.6
Queue Delay	0.0	1.5	0.0	0.0	0.0	0.0
Total Delay	43.7	21.5	24.9	4.5	49.8	30.6
Queue Length 50th (ft)	142	402	218	0	264	151
Queue Length 95th (ft)	188	526	295	40	291	202
Internal Link Dist (ft)		460	1167			
Turn Bay Length (ft)				350	800	600
Base Capacity (vph)	714	2326	3036	813	1572	1007
Starvation Cap Reductn	0	1008	0	0	0	0
Spillback Cap Reductn	0	0	0	0	0	0
Storage Cap Reductn	0	0	0	0	0	0
Reduced v/c Ratio	0.49	0.81	0.43	0.15	0.57	0.52

Intersection Summary

Movement	EBL	EBT	EBR	WBL	WBT	WBR	NBL	NBT	NBR	SBL	SBT	SBR
Lane Configurations												
Volume (veh/h)	346	1058	0	0	1288	123	891	0	516	0	0	0
Number	5	2	12	1	6	16	3	8	18			
Initial Q (Qb), veh	0	0	0	0	0	0	0	0	0			
Ped-Bike Adj(A_pbT)	1.00		1.00	1.00		1.00	1.00		1.00			
Parking Bus, Adj	1.00	1.00	1.00	1.00	1.00	1.00	1.00	1.00	1.00			
Adj Sat Flow, veh/h/ln	1810	1810	0	0	1810	1810	1810	0	1810			
Adj Flow Rate, veh/h	349	1069	0	0	1301	0	900	0	521			
Adj No. of Lanes	2	2	0	0	4	1	3	0	2			
Peak Hour Factor	0.99	0.99	0.99	0.99	0.99	0.99	0.99	0.99	0.99			
Percent Heavy Veh, %	5	5	0	0	5	5	5	0	5			
Cap, veh/h	480	2353	0	0	3189	788	1235	0	688			
Arrive On Green	0.05	0.23	0.00	0.00	0.51	0.00	0.25	0.00	0.25			
Sat Flow, veh/h	3343	3529	0	0	6478	1538	4860	0	2707			
Grp Volume(v), veh/h	349	1069	0	0	1301	0	900	0	521			
Grp Sat Flow(s),veh/h/ln	1672	1719	0	0	1556	1538	1620	0	1354			
Q Serve(g_s), s	14.4	37.5	0.0	0.0	18.0	0.0	23.7	0.0	24.9			
Cycle Q Clear(g_c), s	14.4	37.5	0.0	0.0	18.0	0.0	23.7	0.0	24.9			
Prop In Lane	1.00		0.00	0.00		1.00	1.00		1.00			
Lane Grp Cap(c), veh/h	480	2353	0	0	3189	788	1235	0	688			
V/C Ratio(X)	0.73	0.45	0.00	0.00	0.41	0.00	0.73	0.00	0.76			
Avail Cap(c_a), veh/h	716	2353	0	0	3189	788	1576	0	878			
HCM Platoon Ratio	0.33	0.33	1.00	1.00	1.00	1.00	1.00	1.00	1.00			
Upstream Filter(I)	0.94	0.94	0.00	0.00	1.00	0.00	1.00	0.00	1.00			
Uniform Delay (d), s/veh	64.0	31.6	0.0	0.0	21.1	0.0	47.8	0.0	48.2			
Incr Delay (d2), s/veh	2.0	0.6	0.0	0.0	0.4	0.0	1.3	0.0	2.9			
Initial Q Delay(d3),s/veh	0.0	0.0	0.0	0.0	0.0	0.0	0.0	0.0	0.0			
%ile BackOfQ(-26165%),veh/ln	6.8	18.1	0.0	0.0	7.9	0.0	10.8	0.0	9.6			
LnGrp Delay(d),s/veh	66.0	32.2	0.0	0.0	21.4	0.0	49.1	0.0	51.1			
LnGrp LOS	E	C			C		D		D			
Approach Vol, veh/h		1418			1301			1421				
Approach Delay, s/veh		40.5			21.4			49.8				
Approach LOS		D			C			D				

Timer	1	2	3	4	5	6	7	8
Assigned Phs		2			5	6		8
Phs Duration (G+Y+Rc), s		99.8			24.1	75.7		40.2
Change Period (Y+Rc), s		6.4			6.6	6.4		6.6
Max Green Setting (Gmax), s		83.6			27.4	49.6		43.4
Max Q Clear Time (g_c+I1), s		39.5			16.4	20.0		26.9
Green Ext Time (p_c), s		34.3			1.1	24.8		6.7

Intersection Summary	
HCM 2010 Ctrl Delay	37.7
HCM 2010 LOS	D

Queues

1: Westside Pkwy/Deerfield Pkwy & Windward Pkwy

3/4/2015

Lane Group	EBL	EBT	EBR	WBL	WBT	WBR	NBL	NBT	NBR	SBL	SBT
Lane Group Flow (vph)	97	932	215	314	1318	448	604	715	606	505	556
v/c Ratio	0.69	0.83	0.36	0.83	0.99	0.59	0.90	0.69	1.05	1.00	0.65
Control Delay	50.4	51.5	9.4	95.8	32.8	4.1	71.5	47.3	86.7	98.9	49.3
Queue Delay	0.0	0.0	0.0	0.0	0.0	0.0	0.0	0.0	0.0	0.0	0.0
Total Delay	50.4	51.5	9.4	95.8	32.8	4.1	71.5	47.3	86.7	98.9	49.3
Queue Length 50th (ft)	49	414	20	127	492	6	276	303	~494	240	232
Queue Length 95th (ft)	#119	502	85	#212	#766	35	#369	374	#731	#360	298
Internal Link Dist (ft)		1220			463			1762			975
Turn Bay Length (ft)	110		200	325		250	350		200	200	
Base Capacity (vph)	140	1122	602	384	1338	753	697	1041	576	505	856
Starvation Cap Reductn	0	0	0	0	0	0	0	0	0	0	0
Spillback Cap Reductn	0	0	0	0	0	0	0	0	0	0	0
Storage Cap Reductn	0	0	0	0	0	0	0	0	0	0	0
Reduced v/c Ratio	0.69	0.83	0.36	0.82	0.99	0.59	0.87	0.69	1.05	1.00	0.65

Intersection Summary

~ Volume exceeds capacity, queue is theoretically infinite.
Queue shown is maximum after two cycles.

95th percentile volume exceeds capacity, queue may be longer.
Queue shown is maximum after two cycles.

Movement	EBL	EBT	EBR	WBL	WBT	WBR	NBL	NBT	NBR	SBL	SBT	SBR
Lane Configurations												
Volume (veh/h)	96	923	213	311	1305	444	598	708	600	500	431	120
Number	5	2	12	1	6	16	3	8	18	7	4	14
Initial Q (Qb), veh	0	0	0	0	0	0	0	0	0	0	0	0
Ped-Bike Adj(A_pbT)	1.00		1.00	1.00		1.00	1.00		1.00	1.00		1.00
Parking Bus, Adj	1.00	1.00	1.00	1.00	1.00	1.00	1.00	1.00	1.00	1.00	1.00	1.00
Adj Sat Flow, veh/h/ln	1827	1827	1827	1827	1827	1827	1827	1827	1827	1827	1827	1900
Adj Flow Rate, veh/h	97	932	0	314	1318	0	604	715	0	505	435	0
Adj No. of Lanes	1	2	1	2	2	1	2	2	1	2	2	0
Peak Hour Factor	0.99	0.99	0.99	0.99	0.99	0.99	0.99	0.99	0.99	0.99	0.99	0.99
Percent Heavy Veh, %	4	4	4	4	4	4	4	4	4	4	4	4
Cap, veh/h	188	1319	562	386	1542	662	674	838	375	506	666	0
Arrive On Green	0.05	0.38	0.00	0.15	0.59	0.00	0.20	0.24	0.00	0.15	0.19	0.00
Sat Flow, veh/h	1740	3471	1553	3375	3471	1553	3375	3471	1553	3375	3563	0
Grp Volume(v), veh/h	97	932	0	314	1318	0	604	715	0	505	435	0
Grp Sat Flow(s),veh/h/ln	1740	1736	1553	1688	1736	1553	1688	1736	1553	1688	1736	0
Q Serve(g_s), s	4.8	31.9	0.0	12.6	43.9	0.0	24.4	27.5	0.0	20.9	16.2	0.0
Cycle Q Clear(g_c), s	4.8	31.9	0.0	12.6	43.9	0.0	24.4	27.5	0.0	20.9	16.2	0.0
Prop In Lane	1.00		1.00	1.00		1.00	1.00		1.00	1.00		0.00
Lane Grp Cap(c), veh/h	188	1319	562	386	1542	662	674	838	375	506	666	0
V/C Ratio(X)	0.52	0.71	0.00	0.81	0.85	0.00	0.90	0.85	0.00	1.00	0.65	0.00
Avail Cap(c_a), veh/h	188	1319	562	386	1542	662	699	1041	466	506	843	0
HCM Platoon Ratio	1.00	1.00	1.00	1.33	1.33	1.33	1.00	1.00	1.00	1.00	1.00	1.00
Upstream Filter(I)	1.00	1.00	0.00	1.00	1.00	0.00	1.00	1.00	0.00	1.00	1.00	0.00
Uniform Delay (d), s/veh	30.6	36.8	0.0	57.9	24.9	0.0	54.6	50.7	0.0	59.5	52.3	0.0
Incr Delay (d2), s/veh	1.1	3.2	0.0	11.8	6.3	0.0	13.5	4.9	0.0	39.3	0.6	0.0
Initial Q Delay(d3),s/veh	0.0	0.0	0.0	0.0	0.0	0.0	0.0	0.0	0.0	0.0	0.0	0.0
%ile BackOfQ(-26165%),veh/ln	2.3	15.9	0.0	6.5	22.1	0.0	12.7	13.8	0.0	12.5	7.8	0.0
LnGrp Delay(d),s/veh	31.7	40.0	0.0	69.7	31.2	0.0	68.1	55.6	0.0	98.7	52.8	0.0
LnGrp LOS	C	D		E	C		E	E		F	D	
Approach Vol, veh/h		1029			1632			1319			940	
Approach Delay, s/veh		39.2			38.6			61.3			77.5	
Approach LOS		D			D			E			E	

Timer	1	2	3	4	5	6	7	8
Assigned Phs	1	2	3	4	5	6	7	8
Phs Duration (G+Y+Rc), s	20.0	57.2	31.9	30.9	11.0	66.2	25.0	37.8
Change Period (Y+Rc), s	5.4	6.5	* 5.2	5.6	* 5.2	6.5	* 5.2	5.6
Max Green Setting (Gmax), s	14.6	42.5	* 28	32.4	* 5.8	51.5	* 20	40.4
Max Q Clear Time (g_c+I1), s	14.6	33.9	26.4	18.2	6.8	45.9	22.9	29.5
Green Ext Time (p_c), s	0.0	8.0	0.3	2.9	0.0	5.2	0.0	2.7

Intersection Summary	
HCM 2010 Ctrl Delay	52.3
HCM 2010 LOS	D

Notes

* HCM 2010 computational engine requires equal clearance times for the phases crossing the barrier.

Lane Group	EBL	EBT	WBL	WBT	WBR	NBT	NBR	SBL	SBT	SBR
Lane Group Flow (vph)	79	2013	55	2016	360	47	137	223	220	43
v/c Ratio	0.51	0.91	0.40	0.65	0.33	0.45	0.72	0.88	0.87	0.13
Control Delay	21.9	25.1	24.1	11.4	1.9	76.5	40.3	91.5	89.0	0.9
Queue Delay	0.0	0.0	0.0	0.0	0.0	0.0	0.0	0.0	0.0	0.0
Total Delay	21.9	25.1	24.1	11.4	1.9	76.5	40.3	91.5	89.0	0.9
Queue Length 50th (ft)	32	567	9	302	19	42	29	211	207	0
Queue Length 95th (ft)	m38	m645	m36	m284	m27	86	#111	#365	#357	0
Internal Link Dist (ft)		638		803		591			590	
Turn Bay Length (ft)	195		185		240					75
Base Capacity (vph)	163	2218	140	3094	1089	126	207	259	260	330
Starvation Cap Reductn	0	0	0	0	0	0	0	0	0	0
Spillback Cap Reductn	0	0	0	0	0	0	0	0	0	0
Storage Cap Reductn	0	0	0	0	0	0	0	0	0	0
Reduced v/c Ratio	0.48	0.91	0.39	0.65	0.33	0.37	0.66	0.86	0.85	0.13

Intersection Summary

95th percentile volume exceeds capacity, queue may be longer.
Queue shown is maximum after two cycles.

m Volume for 95th percentile queue is metered by upstream signal.

Movement	EBL	EBT	EBR	WBL	WBT	WBR	NBL	NBT	NBR	SBL	SBT	SBR
Lane Configurations												
Volume (veh/h)	77	1941	12	53	1956	349	30	16	133	415	15	42
Number	5	2	12	1	6	16	3	8	18	7	4	14
Initial Q (Qb), veh	0	0	0	0	0	0	0	0	0	0	0	0
Ped-Bike Adj(A_pbT)	1.00		1.00	1.00		1.00	1.00		1.00	1.00		1.00
Parking Bus, Adj	1.00	1.00	1.00	1.00	1.00	1.00	1.00	1.00	1.00	1.00	1.00	1.00
Adj Sat Flow, veh/h/ln	1827	1827	1900	1827	1827	1827	1900	1827	1827	1827	1827	1827
Adj Flow Rate, veh/h	79	2001	12	55	2016	360	31	16	137	439	0	43
Adj No. of Lanes	1	2	0	1	3	1	0	1	1	2	0	1
Peak Hour Factor	0.97	0.97	0.97	0.97	0.97	0.97	0.97	0.97	0.97	0.97	0.97	0.97
Percent Heavy Veh, %	4	4	4	4	4	4	4	4	4	4	4	4
Cap, veh/h	215	2213	13	148	3107	967	83	43	111	517	0	231
Arrive On Green	0.04	0.63	0.61	0.08	1.00	1.00	0.07	0.07	0.07	0.15	0.00	0.15
Sat Flow, veh/h	1740	3538	21	1740	4988	1553	1167	602	1553	3480	0	1553
Grp Volume(v), veh/h	79	981	1032	55	2016	360	47	0	137	439	0	43
Grp Sat Flow(s),veh/h/ln	1740	1736	1823	1740	1663	1553	1769	0	1553	1740	0	1553
Q Serve(g_s), s	2.3	68.1	68.4	1.6	0.0	0.0	3.5	0.0	10.0	17.2	0.0	3.4
Cycle Q Clear(g_c), s	2.3	68.1	68.4	1.6	0.0	0.0	3.5	0.0	10.0	17.2	0.0	3.4
Prop In Lane	1.00		0.01	1.00		1.00	0.66		1.00	1.00		1.00
Lane Grp Cap(c), veh/h	215	1086	1140	148	3107	967	126	0	111	517	0	231
V/C Ratio(X)	0.37	0.90	0.91	0.37	0.65	0.37	0.37	0.00	1.24	0.85	0.00	0.19
Avail Cap(c_a), veh/h	240	1086	1140	166	3107	967	126	0	111	547	0	244
HCM Platoon Ratio	1.00	1.00	1.00	2.00	2.00	2.00	1.00	1.00	1.00	1.00	1.00	1.00
Upstream Filter(I)	1.00	1.00	1.00	0.77	0.77	0.77	1.00	0.00	1.00	1.00	0.00	1.00
Uniform Delay (d), s/veh	8.5	22.6	22.6	29.2	0.0	0.0	62.0	0.0	65.0	58.1	0.0	52.2
Incr Delay (d2), s/veh	0.4	12.1	11.8	0.4	0.8	0.8	0.7	0.0	161.6	11.5	0.0	0.4
Initial Q Delay(d3),s/veh	0.0	0.0	0.0	0.0	0.0	0.0	0.0	0.0	0.0	0.0	0.0	0.0
%ile BackOfQ(-26165%),veh/ln	1.1	36.1	37.9	1.3	0.2	0.2	1.8	0.0	9.3	9.1	0.0	1.5
LnGrp Delay(d),s/veh	8.9	34.7	34.4	29.6	0.8	0.8	62.7	0.0	226.6	69.6	0.0	52.6
LnGrp LOS	A	C	C	C	A	A	E		F	E		D
Approach Vol, veh/h		2092			2431			184			482	
Approach Delay, s/veh		33.6			1.5			184.7			68.1	
Approach LOS		C			A			F			E	

Timer	1	2	3	4	5	6	7	8
Assigned Phs	1	2		4	5	6		8
Phs Duration (G+Y+Rc), s	9.6	91.6		24.8	10.0	91.2		14.0
Change Period (Y+Rc), s	* 5.2	* 6		* 5.2	* 5.2	* 6		5.0
Max Green Setting (Gmax), s	* 5.8	* 83		* 21	* 6.8	* 82		9.0
Max Q Clear Time (g_c+I1), s	3.6	70.4		19.2	4.3	2.0		12.0
Green Ext Time (p_c), s	0.0	12.5		0.4	0.0	78.9		0.0

Intersection Summary	
HCM 2010 Ctrl Delay	27.1
HCM 2010 LOS	C

Notes

User approved pedestrian interval to be less than phase max green.

User approved volume balancing among the lanes for turning movement.

* HCM 2010 computational engine requires equal clearance times for the phases crossing the barrier.

Lane Group	EBT	EBR	WBL	WBT	SBL	SBR
Lane Group Flow (vph)	1306	1278	1256	2091	141	371
v/c Ratio	0.37	1.32	1.33	0.49	0.53	1.25
Control Delay	14.9	166.9	179.7	2.2	69.7	177.3
Queue Delay	0.0	0.1	0.0	1.4	0.0	0.0
Total Delay	14.9	167.0	179.7	3.5	69.7	177.3
Queue Length 50th (ft)	116	~1475	~736	95	64	~196
Queue Length 95th (ft)	m129	m#1729	#878	144	101	#314
Internal Link Dist (ft)	803			460		
Turn Bay Length (ft)		560			825	1000
Base Capacity (vph)	3501	971	947	4311	267	296
Starvation Cap Reductn	0	22	0	1913	0	0
Spillback Cap Reductn	59	0	0	0	0	0
Storage Cap Reductn	0	0	0	0	0	0
Reduced v/c Ratio	0.38	1.35	1.33	0.87	0.53	1.25

Intersection Summary

~ Volume exceeds capacity, queue is theoretically infinite.
Queue shown is maximum after two cycles.

95th percentile volume exceeds capacity, queue may be longer.
Queue shown is maximum after two cycles.

m Volume for 95th percentile queue is metered by upstream signal.

Movement	EBL	EBT	EBR	WBL	WBT	WBR	NBL	NBT	NBR	SBL	SBT	SBR
Lane Configurations												
Volume (veh/h)	0	1254	1227	1206	2007	0	0	0	0	135	0	356
Number	5	2	12	1	6	16				7	4	14
Initial Q (Qb), veh	0	0	0	0	0	0				0	0	0
Ped-Bike Adj(A_pbT)	1.00		1.00	1.00		1.00				1.00		1.00
Parking Bus, Adj	1.00	1.00	1.00	1.00	1.00	1.00				1.00	1.00	1.00
Adj Sat Flow, veh/h/ln	0	1827	1845	1845	1827	0				1845	0	1845
Adj Flow Rate, veh/h	0	1306	0	1256	2091	0				141	0	371
Adj No. of Lanes	0	4	1	2	3	0				2	0	2
Peak Hour Factor	0.96	0.96	0.96	0.96	0.96	0.96				0.96	0.96	0.96
Percent Heavy Veh, %	0	4	3	3	4	0				3	0	3
Cap, veh/h	0	3501	874	949	4311	0				268	0	217
Arrive On Green	0.00	1.00	0.00	0.56	1.00	0.00				0.08	0.00	0.08
Sat Flow, veh/h	0	6540	1568	3408	5152	0				3408	0	2760
Grp Volume(v), veh/h	0	1306	0	1256	2091	0				141	0	371
Grp Sat Flow(s),veh/h/ln	0	1571	1568	1704	1663	0				1704	0	1380
Q Serve(g_s), s	0.0	0.0	0.0	39.0	0.0	0.0				5.6	0.0	11.0
Cycle Q Clear(g_c), s	0.0	0.0	0.0	39.0	0.0	0.0				5.6	0.0	11.0
Prop In Lane	0.00		1.00	1.00		0.00				1.00		1.00
Lane Grp Cap(c), veh/h	0	3501	874	949	4311	0				268	0	217
V/C Ratio(X)	0.00	0.37	0.00	1.32	0.49	0.00				0.53	0.00	1.71
Avail Cap(c_a), veh/h	0	3501	874	949	4311	0				268	0	217
HCM Platoon Ratio	1.00	2.00	2.00	2.00	2.00	1.00				1.00	1.00	1.00
Upstream Filter(I)	0.00	0.32	0.00	0.44	0.44	0.00				1.00	0.00	1.00
Uniform Delay (d), s/veh	0.0	0.0	0.0	31.0	0.0	0.0				62.0	0.0	64.5
Incr Delay (d2), s/veh	0.0	0.1	0.0	148.6	0.2	0.0				1.9	0.0	338.8
Initial Q Delay(d3),s/veh	0.0	0.0	0.0	0.0	0.0	0.0				0.0	0.0	0.0
%ile BackOfQ(-26165%),veh/ln	0.0	0.0	0.0	37.5	0.1	0.0				2.7	0.0	14.4
LnGrp Delay(d),s/veh	0.0	0.1	0.0	179.6	0.2	0.0				63.9	0.0	403.3
LnGrp LOS		A		F	A					E		F
Approach Vol, veh/h		1306			3347						512	
Approach Delay, s/veh		0.1			67.5						309.9	
Approach LOS		A			E						F	

Timer	1	2	3	4	5	6	7	8
Assigned Phs	1	2		4		6		
Phs Duration (G+Y+Rc), s	43.0	82.0		15.0		125.0		
Change Period (Y+Rc), s	7.5	6.5		6.0		7.5		
Max Green Setting (Gmax), s	35.5	75.5		9.0		117.5		
Max Q Clear Time (g_c+I1), s	41.0	2.0		13.0		2.0		
Green Ext Time (p_c), s	0.0	12.9		0.0		91.9		

Intersection Summary	
HCM 2010 Ctrl Delay	74.5
HCM 2010 LOS	E

Lane Group	EBL	EBT	WBT	WBR	NBL	NBR
Lane Group Flow (vph)	524	973	2324	333	1140	609
v/c Ratio	0.81	0.42	0.83	0.38	0.85	0.64
Control Delay	49.0	23.6	37.4	3.7	55.4	26.8
Queue Delay	0.0	2.6	1.3	0.0	0.0	0.0
Total Delay	49.0	26.2	38.8	3.7	55.4	26.8
Queue Length 50th (ft)	223	326	543	0	348	150
Queue Length 95th (ft)	264	426	593	57	406	223
Internal Link Dist (ft)		460	1167			
Turn Bay Length (ft)				350	800	600
Base Capacity (vph)	680	2315	2811	885	1355	960
Starvation Cap Reductn	0	1183	0	0	0	0
Spillback Cap Reductn	0	0	279	0	0	0
Storage Cap Reductn	0	0	0	0	0	0
Reduced v/c Ratio	0.77	0.86	0.92	0.38	0.84	0.63

Intersection Summary

Movement	EBL	EBT	EBR	WBL	WBT	WBR	NBL	NBT	NBR	SBL	SBT	SBR
Lane Configurations												
Volume (veh/h)	487	905	0	0	2161	310	1060	0	566	0	0	0
Number	5	2	12	1	6	16	3	8	18			
Initial Q (Qb), veh	0	0	0	0	0	0	0	0	0			
Ped-Bike Adj(A_pbT)	1.00		1.00	1.00		1.00	1.00		1.00			
Parking Bus, Adj	1.00	1.00	1.00	1.00	1.00	1.00	1.00	1.00	1.00			
Adj Sat Flow, veh/h/ln	1845	1827	0	0	1827	1845	1845	0	1845			
Adj Flow Rate, veh/h	524	973	0	0	2324	0	1140	0	609			
Adj No. of Lanes	2	2	0	0	4	1	3	0	2			
Peak Hour Factor	0.93	0.93	0.93	0.93	0.93	0.93	0.93	0.93	0.93			
Percent Heavy Veh, %	3	4	0	0	4	3	3	0	3			
Cap, veh/h	643	2331	0	0	2855	712	1323	0	737			
Arrive On Green	0.06	0.22	0.00	0.00	0.45	0.00	0.27	0.00	0.27			
Sat Flow, veh/h	3408	3563	0	0	6540	1568	4954	0	2760			
Grp Volume(v), veh/h	524	973	0	0	2324	0	1140	0	609			
Grp Sat Flow(s),veh/h/ln	1704	1736	0	0	1571	1568	1651	0	1380			
Q Serve(g_s), s	21.3	33.7	0.0	0.0	44.8	0.0	30.7	0.0	29.1			
Cycle Q Clear(g_c), s	21.3	33.7	0.0	0.0	44.8	0.0	30.7	0.0	29.1			
Prop In Lane	1.00		0.00	0.00		1.00	1.00		1.00			
Lane Grp Cap(c), veh/h	643	2331	0	0	2855	712	1323	0	737			
V/C Ratio(X)	0.82	0.42	0.00	0.00	0.81	0.00	0.86	0.00	0.83			
Avail Cap(c_a), veh/h	682	2331	0	0	2855	712	1359	0	757			
HCM Platoon Ratio	0.33	0.33	1.00	1.00	1.00	1.00	1.00	1.00	1.00			
Upstream Filter(I)	0.93	0.93	0.00	0.00	1.00	0.00	1.00	0.00	1.00			
Uniform Delay (d), s/veh	63.2	31.0	0.0	0.0	33.1	0.0	48.8	0.0	48.3			
Incr Delay (d2), s/veh	6.8	0.5	0.0	0.0	2.7	0.0	5.8	0.0	7.4			
Initial Q Delay(d3),s/veh	0.0	0.0	0.0	0.0	0.0	0.0	0.0	0.0	0.0			
%ile BackOfQ(-26165%),veh/ln	10.6	16.4	0.0	0.0	19.9	0.0	14.7	0.0	11.8			
LnGrp Delay(d),s/veh	70.0	31.5	0.0	0.0	35.7	0.0	54.6	0.0	55.6			
LnGrp LOS	E	C			D		D		E			
Approach Vol, veh/h		1497			2324			1749				
Approach Delay, s/veh		45.0			35.7			55.0				
Approach LOS		D			D			D				

Timer	1	2	3	4	5	6	7	8
Assigned Phs		2			5	6		8
Phs Duration (G+Y+Rc), s		98.0			30.4	67.6		42.0
Change Period (Y+Rc), s		6.4			6.6	6.4		6.6
Max Green Setting (Gmax), s		90.6			25.4	58.6		36.4
Max Q Clear Time (g_c+I1), s		35.7			23.3	46.8		32.7
Green Ext Time (p_c), s		51.6			0.5	11.6		2.7

Intersection Summary	
HCM 2010 Ctrl Delay	44.3
HCM 2010 LOS	D

ATTACHMENT 6- ARC PROJECT FACT SHEET

FN-278

PLAN 2040 RTP Update PROJECT FACT SHEET

Short Title WINDWARD PARKWAY WESTBOUND AUXILIARY LANE FROM SR 400 TO DEERFIELD PARKWAY

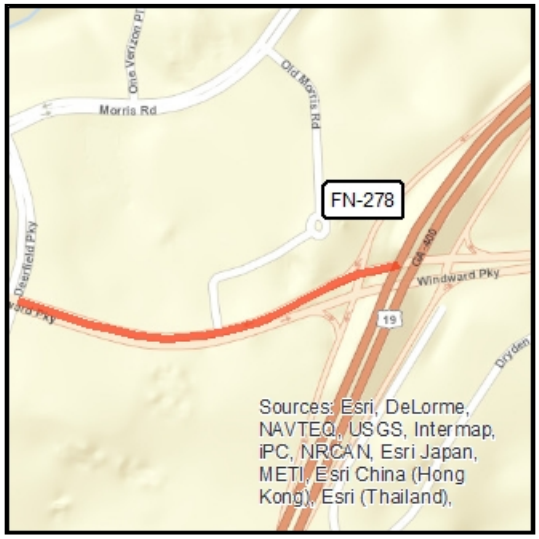

GDOT Project No.	0010768
Federal ID No.	N/A
Status	Programmed
Service Type	Roadway / General Purpose Capacity
Sponsor	GDOT
Jurisdiction	Fulton County (North)
Analysis Level	In the Region's Air Quality Conformity Analysis
Existing Thru Lane	0
Planned Thru Lane	1
Network Year	2020
Corridor Length	0.4 miles

Detailed Description and Justification

The project proposes to add a dual lane exit to Windward Parkway from northbound SR 400. Two alternatives for the dual lane exit include adding an auxiliary lane from the on ramp at Old Milton Parkway to the off ramp at Windward Parkway, or adding a 500 foot long storage lane on SR 400 exiting to Windward Parkway. The SR 400 northbound off ramp to Windward Parkway will be widened to provide three 12-foot left turn lanes with shoulders. On Windward Parkway, westbound, an additional lane will be constructed to provide three 11-foot travel lanes with a 4-foot bicycle lane from the SR 400 northbound off ramp to Deerfield Parkway. Minor right of way will be required on Windward Parkway for the right turn lane at the commercial development.

Phase Status & Funding Information		Status	FISCAL YEAR	TOTAL PHASE COST	BREAKDOWN OF TOTAL PHASE COST BY FUNDING SOURCE			
					FEDERAL	STATE	BONDS	LOCAL/PRIVATE
ROW	Local Jurisdiction/Municipality Funds	AUTH	2013	**$810,000**	~~$0,000~~	~~$0,000~~	~~$0,000~~	~~$810,000~~
ROW	Georgia Transportation Infrastructure Bank		2016	**$754,000**	$0,000	$754,000	$0,000	$0,000
ROW	Local Jurisdiction/Municipality Funds		2016	**$196,000**	$0,000	$0,000	$0,000	$196,000
CST	Georgia Transportation Infrastructure Bank		2017	**$2,029,000**	$0,000	$2,029,000	$0,000	$0,000
CST	STP - Statewide Flexible (GDOT)		2017	**$1,370,000**	$1,096,000	$274,000	$0,000	$0,000
				$5,159,000	**$1,096,000**	**$3,057,000**	**$0,000**	**$1,006,000**

SCP: Scoping PE: Preliminary engineering / engineering / design / planning PE-OV: GDOT oversight services for engineering ROW: Right-of-way Acquistion
UTL: Utility relocation CST: Construction / Implementation ALL: Total estimated cost, inclusive of all phases

? For additional information about this project, please call (404) 463-3100 or email transportation@atlantaregional.com.

ARC

Report Generated: 12/23/2014

ATTACHMENT 7- CONCEPT MEETING MINUTES

GRESHAM
SMITH AND
PARTNERS

June 14, 2012

Concept Team Meeting
SR 400 @ CR 9284/WINDWARD PKWY, P.I. No. 0010768, Fulton County
GS&P Project No.: 27204.01
Meeting Notes

MEETING DATE: May 15, 2012
MEETING TIME: 1:30 pm – 3:30 pm
MEETING LOCATION: North Fulton CID office, Alpharetta, Georgia

ATTENDEES: See Sign in Sheet

1. Project Overview
   a. The NFCID completed a traffic analysis of the SR 400 northbound off-ramp at Windward Parkway intersection and identified two traffic concerns;
      - Morning congestion on the SR 400 northbound off ramp turning right onto Windward Parkway
      - Afternoon congestion on the SR 400 northbound off ramp turning left onto Windward Parkway

   b. Based on the traffic analysis above, the NFCID programmed two phases of improvements to address the morning and afternoon congestion.
      - Phase 1 was recently completed and added a right turn lane with free flow access on Windward Parkway from the SR 400 northbound off ramp to North Point Parkway
      - Phase 2 is the current project which will add an auxiliary lane onto SR 400 approximately 0.40 miles in length to allow for two lanes to exit SR 400 northbound onto Windward Parkway. It also adds a third left turn lane at the SR 400 northbound off ramp and Windward Parkway. In addition, a third lane will be added approximately 0.5 miles in length on Windward Parkway from the SR 400 northbound off ramp to Deerfield Parkway. The lane will end as a trap right turn lane onto Deerfield Parkway. The project also adds a right turn lane approximately 2300 feet in length on northbound Westside Parkway for access onto eastbound Windward Parkway

2. Discussion
   - The City of Alpharetta is working on the design for the northbound right turn lane on Westside Parkway and anticipates the design work being completed in the next 2-3 months. However, Alpharetta currently does not have funding for construction, so GDOT inquired if the right turn lane should be removed from the Concept. Alpharetta requested the right turn lane remain in the concept report for now.

- The Milton Livable Centers Initiative (LCI) identified this project as its number one priority, and the City of Milton was in support of the proposed project per comments from the previous meeting.
- The Project Framework Agreement (PFA) with GDOT must be with a local or county government.
- The proposed project will not adversely impact the landscaping or hardscape recently completed by NFCID and there will be no impacts to the SR 400 bridge.
- The City of Alpharetta and the City of Milton do not have any proposed road improvements planned in the vicinity of the proposed project.
- GS&P will coordinate with GDOT to complete the right-of-way and utility cost estimates for the project.
- GS&P will add the letter from the GDOT planning office approving the traffic for the project to the concept report.
- GDOT anticipates the baseline schedule to be approved in the next month.

3. Concept Report Comments
    - The Level of Service (LOS) in Table 1 and 2 for Windward Pkwy/Deerfield/Westside Pkwy goes from a C in 2011 to a D in 2015. The group recommended reviewing this and adding an explanation to clarify the increase in LOS. GS&P noted that the intersection might have been evaluated without the right turn lane and two through lanes from Westside to Deerfield. GS&P will verify and update the concept report accordingly.
    - The project is on a designated bike route on Windward Parkway per the bicycle lanes added on Windward Parkway by Alpharetta.
    - Under the Context Sensitive Solutions section of the concept report, note the pedestrian and bicycle accommodations are for Windward Parkway.
    - Edwards-Pitman is updating the history section and will send the revised section to GS&P.
    - Add projects PI# 0008445 and PI# 0001757 to the other projects in area of the concept report.
    - Add the project framework agreement as an attachment to the concept report.
    - Update/add right-of-way and utility cost estimates to the concept report.
    - Show the 2015 and 2035 No Build LOS to the traffic analysis tables in the concept report for comparison.

This represents our understanding of the items discussed at this meeting. If you have any questions or comments concerning any of the information contained herein, please contact me.

Prepared By: Scott Shelton, P.E.
Attachment: Sign In Sheet

MEETING SIGN-IN SHEET

Project:	Windward Parkway at SR 400	**Meeting Date:**	May 15, 2012
Meeting Time:	1:30 pm – 3:30 pm	**Place/Room:**	North Fulton CID

Name	Company	E-Mail
Kent Black	Gresham, Smith and Partners	kent_black@gspnet.com
Eric Bosman	Kimley-Horn	eric.bosman@kimley-horn.com
Cynthia Burney	GDOT	cburney@dot.ga.gov
Kyle Mote	GDOT	kmote@dot.ga.gov
Jill Brown	Edwards-Pitman Environmental, Inc.	jbrown@edwards-pitman.com
Dennis Woodling	Atkins	dennis.woodling@atkinsglobal.com
Pete Sewczwicz	City of Alpharetta	psewczwicz@alpharetta.ga.us
Scott Shelton	Gresham, Smith, and Partners	scott_shelton@gspnet.com
Jody Braswell	Gresham, Smith, and Partners	jody_braswell@gspnet.com
Kristin Rome	NFCID	krome@gnfcc.com
Ann M. Hanlon	NFCID	ahanlon@gnfcc.com
Brandon Beach	GNFCC	bbeach@gnfcc.com
Vicki Gavalas	GDOT – District 7	vgavalas@dot.ga.gov

GRESHAM
SMITH AND
PARTNERS

February 4, 2015

MEETING NOTES

SR 400 at CR 9284/Windward Parkway, P.I. No. 0010768, Fulton County
Alpharetta, GA
GS&P Project No. 27204.03

Meeting Date: January 26, 2015
Meeting Time: 11:00 AM
Participants:

Cynthia Burney	GDOT Office of Program Delivery
Patrick Allen	GDOT District 7 Traffic Operations
Chris Woods	GDOT District 7 Traffic Operations
Paul DeNard	GDOT Office of Traffic Operations
Scott Zehngraff	GDOT Office of Traffic Operations
Nikki Reutlinger	Atkins
Eric Bosman	Kimley-Horn
Jody Braswell	Gresham, Smith & Partners (GS&P)
Scott Shelton	Gresham, Smith & Partners (GS&P)

1. The Georgia Department of Transportation (GDOT) and the North Fulton Community Improvement District (NFCID) noted that the Project Framework Agreement (PFA) will need to be approved and executed by the City of Alpharetta. The City of Alpharetta approved the PFA at their Council meeting on 1/26/15. The signed PFA was transmitted to GDOT District 7 on 1/30/15. The PFA will allow for the project to be implemented by GDOT. The GDOT PM will coordinate with NFCID to update the project schedule.
2. The proposed project would add a third left turn lane to the SR 400 northbound exit ramp at Windward Parkway and a new receiving lane to Windward Parkway westbound to Deerfield Parkway. The project also had proposed to add an auxiliary lane to SR 400 northbound to allow for two lanes to exit from SR 400 northbound onto Windward Parkway. The length of the auxiliary lane was proposed to be 500'.
3. GDOT recently constructed a quick response project to add a flex lane on the SR 400 northbound shoulder from Old Milton Parkway to Windward Parkway. The flex lane is open during peak hours and allows vehicles to access SR 400 northbound at Old Milton Parkway and exit at Windward Parkway without having to merge with through traffic on SR 400. The flex lane also creates two lanes exiting SR 400 northbound onto Windward Parkway.
4. The group discussed if any improvements to SR 400 northbound are warranted since the flex lane would provide two lanes for vehicles to exit SR 400 northbound onto Windward Parkway.
5. GDOT Traffic Operations (Operations) requested the project consider shifting the end of the flex lane to the south and adding a shoulder from the end of the flex lane and tie to the existing shoulder on the exit ramp. GDOT Traffic Operations also recommended updating the signing and marking plans accordingly.

6. GDOT Traffic Operations recommended the design team review the construction and sign impacts to add the shoulder. If the impacts increase environmental impacts or cause delays to the project schedule, GDOT Traffic Operations recommended leaving the flex lane as is. If there are no significant environmental or schedule impacts, GDOT Traffic Operations would be acceptable to contributing the additional funding needed for the addition of the shoulder.
7. GDOT requested the design team coordinate with the GDOT PM to determine the potential impacts and provide an updated cost estimate to show the amount of additional funding needed to implement the project. In addition, GDOT requested portions of the previously prepared traffic analysis be submitted to show the queue lengths on the ramp do not impact SR 400 and the validation for a dual lane exit ramp.

This represents our understanding of the items discussed at this meeting. If you have any questions or comments concerning any of the information contained herein, please contact me.

Prepared by: Scott Shelton, P.E.
Project Manager

RC

GRESHAM SMITH AND PARTNERS

Meeting Attendance Record

SR 400 Northbound Exit Ramp at Windward Parkway and Auxiliary Lane on SR 400

P.I. No. 0010768

GS&P Project No. 27204.03

GDOT – 25th Floor Large Conference Room

January 26, 2015

✓ – Attended

	Name	Organization	Phone	Email
1.	Taylor Wright	Atkins	770.933.0280	Taylor.Wright@atkinsglobal.com
2.	Nikki Reutlinger	Atkins	770.933.0280	Nicole.Reutlinger@atkinsglobal.com
3.	Jody Braswell	GS&P	770.754.0755	Jody_Braswell@gspnet.com
4.	Scott Shelton	GS&P	770.754.0755	Scott_Shelton@gspnet.com
5.	Cynthia Burney	GDOT	404.631.1851	cburney@dot.ga.gov
6.	Patrick Allen	GDOT		paallen@dot.ga.gov
7.	Chris Woods	GDOT		cwoods@dot.ga.gov
8.	Paul DeNard	GDOT		pdenard@dot.ga.gov
9.	Scott Zehngraff	GDOT		szehngraff@dot.ga.gov
10.	Eric Bosman	Kimley Horn	404.201.6135	eric.bosman@kimley-horn.com
11.				
12.				
13.				
14.				
15.				
16.				
17.				
18.				
19.				
20.				
21.				
22.				
23.				
24.				
25.				

ATTACHMENT 8- MS4 POND LOCATIONS

3/17/2015 3:17:14 PM	Jversion	0010768_Concept MS4 Layout.dgn	STATE	PROJECT NUMBER	SHEET NO.	TOTAL SHEETS
USER:sartlnb	gplotborder-V8I-PO.tbl		GA	0010768		

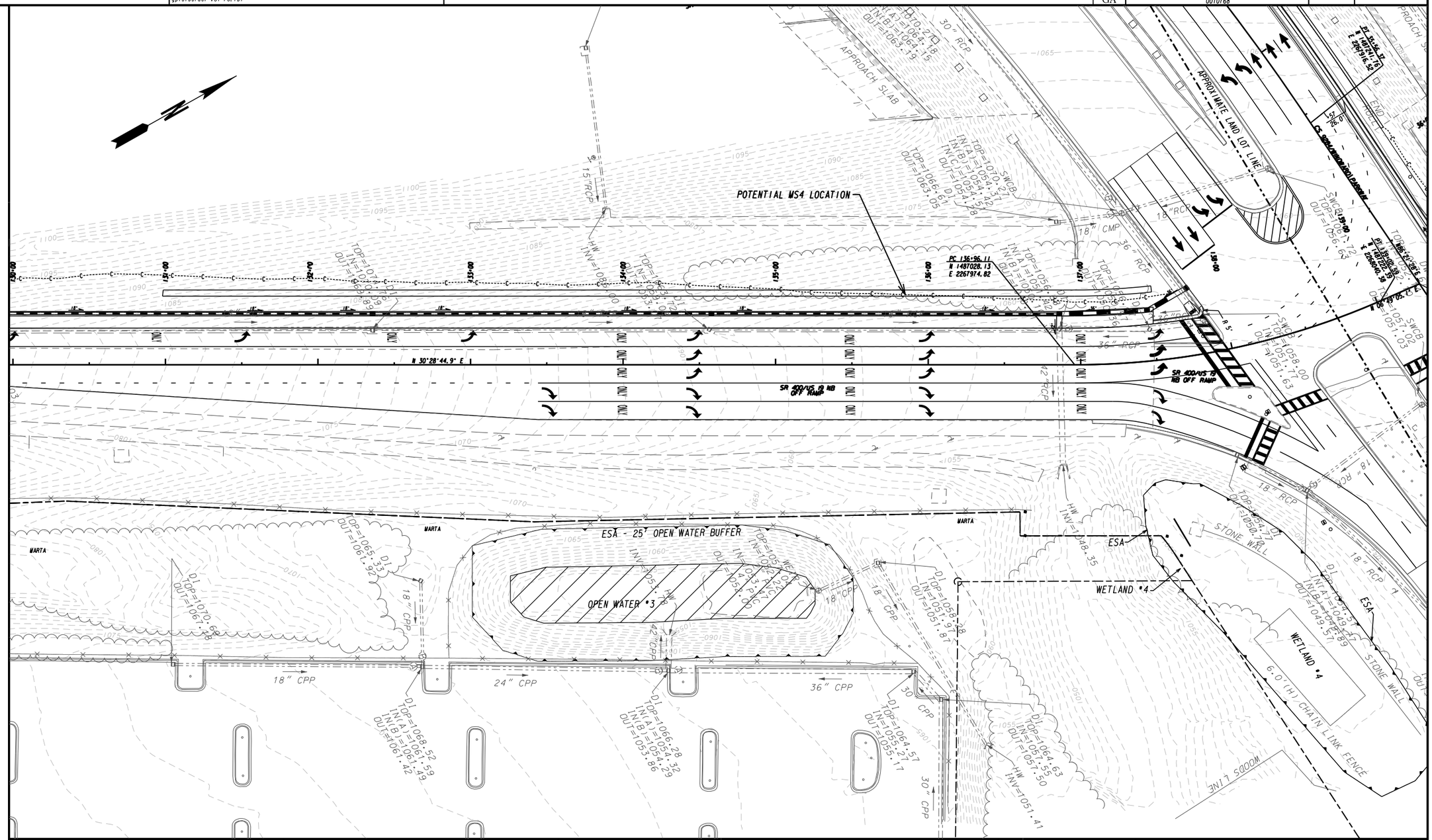

EXISTING R/W & PROPERTY LINE	
REQUIRED R/W LINE	
CONSTRUCTION LIMITS	—C—F—
EASEMENT FOR CONSTRUCTION & MAINTENANCE OF SLOPES	
EASEMENT FOR CONSTR OF SLOPES	
EASEMENT FOR CONSTR OF DRIVES	

BEGIN LIMIT OF ACCESS	BLA
END LIMIT OF ACCESS	ELA
LIMIT OF ACCESS	
R/W AND LIMIT OF ACCESS	

NORTH FULTON
COMMUNITY IMPROVEMENT DISTRICT

GRESHAM SMITH AND PARTNERS

SCALE IN FEET
0 30 60 120

REVISION DATES

STATE OF GEORGIA
DEPARTMENT OF TRANSPORTATION

OFFICE: PROGRAM DELIVERY

CONCEPT MS4 LOCATION MAP
SR 400/US 19

PI: 0010768
COUNTY: FULTON

DRAWING No. 00-001

3/1/2007 GPLN