ORIGINAL TO GENERAL FILES

DEPARTMENT OF TRANSPORTATION
STATE OF GEORGIA

OFFICE OF DESIGN POLICY & SUPPORT
INTERDEPARTMENTAL CORRESPONDENCE

FILE P.I. #0006327
CSSTP-0006-00(327)
GDOT District 1 - Gainesville
Barrow County
West Winder Bypass

OFFICE Design Policy & Support

DATE May 31, 2011

FROM for Brent Story, State Design Policy Engineer

TO SEE DISTRIBUTION

SUBJECT **APPROVED REVISED CONCEPT REPORT**

Attached is the approved Revised Concept Report for the above subject project.

Attachment

DISTRIBUTION:

Genetha Rice-Singleton, Program Control Administrator
Bobby Hilliard, State Program Delivery Engineer
Cindy VanDyke, State Transportation Planning Administrator
Angela Robinson, Financial Management Administrator
Glenn Bowman, State Environmental Administrator
Ben Rabun, State Bridge Engineer
Kathy Zahul, State Traffic Engineer
Georgene Geary, State Materials & Research Engineer
Ron Wishon, State Project Review Engineer
Jeff Baker, State Utilities Engineer
Ken Thompson, Statewide Location Bureau Chief
Michael Henry, Systems & Classification Branch Chief
Todd McDuffie, District Engineer
Robert Mahoney, District Preconstruction Engineer
Allen Ferguson, District Utilities Engineer
Douglas Fadool, Project Manager
BOARD MEMBER - 7th Congressional District

DEPARTMENT OF TRANSPORTATION
STATE OF GEORGIA

REVISED PROJECT CONCEPT REPORT

Project Number: CSSTP-0006-00(327)
County: Barrow
P. I. Number: 0006327
Federal Route Number: N/A
State Route Number: SR 8, SR 211, SR 316

The features from the approved concept report are being revised by breaking the project up into three separate projects. Also, recommendations from the VE Study will revise the inside lane width, ramp shoulder widths, mainline shoulder widths, bridge shoulder width, and the median type.

Submitted for approval:

DATE 2-29-11 — Shrutal Amin, Moreland Altobelli Associates
Design Consultant Name and Firm Name

DATE _____ — _____
Barrow County

DATE 3/2/2011 — Bobby Hilliard ** /KLP
State Program Delivery Engineer

DATE 3/2/2011 — [signature]
Project Manager

** submission on file

Recommendation for approval:

DATE 3-8-11 — Glenn Bowman *** /KLP
State Environmental Administrator

DATE 4-26-11 — Ben Rabun *** /KLP
State Bridge Design Engineer

*** Recommendation on file

The concept as presented herein and submitted for approval is consistent with that which is included in the Regional Transportation Program (RTP) and/or the State Transportation Improvement Program (STIP).

DATE 3-22-11 — Cynthia L. VanDyke *
State Transportation Planning Administrator

* THIS REVISED CONCEPT REPORT IS SIGNED WITH THE UNDERSTANDING THAT THE PRESENTED REVISED CONCEPT DOES NOT MATCH THE CURRENT RTP. THIS OFFICE WILL WORK WITH THE ATLANTA REGIONAL COMMISSION TO ENSURE THAT THE REVISED CONCEPT IS REFLECTED APPROPRIATELY WITHIN THE UPCOMING PLAN 2040 RTP UPDATE SCHEDULED FOR LATE SUMMER. IN ADDITION, THE FULL NEED & PURPOSE STATEMENT FROM THE PRIOR CONCEPT REPORT HAS BEEN ATTACHED FOR REFERENCE.

Need and Purpose:

The need for the proposed projects is to provide a bypass route on the west side of the city of Winder from SR 316 to SR 211 and to construct a grade-separated railroad crossing at the intersection of the West Winder Bypass and SR 8. The purpose is to alleviate the percentage of trucks utilizing minor arterial routes and to reduce congestion and accident rates along Patrick Mill Road, SR 8, SR 211 and Pearl Pentecost Road.

Planning Background and Project History

In the 1990's, commercial and industrial land uses began to develop along SR 8, Bankhead Highway and Patrick Mill Road. The west side of the city of Winder includes the West Winder Industrial Park, business centers and manufacturing plants. SR 8 and Bankhead Highway parallel the CSX railroad that passes through the City of Winder. Industrial and commercial traffic from this area of Barrow County primarily travel to and from the interstate system via SR 316 and SR 211. This travel pattern requires that the industrial truck traffic from this area use an at-grade railroad crossing and travel on residential collector roadways to reach SR 211 or travel through the Downtown area of the city of Winder. Currently, the only grade-separated railroad crossing for the city of Winder is the Center Street underpass located approximately 3 miles east of Patrick Mill Road. To address this need, in the year 2000, project CSSTP-0006-00 (326) Phase I, P.I. Number 0006326 was established. This project includes a railroad overpass on the west side of Winder from Patrick Mill Road at Mathews School Road to Pearl Pentecost Road. This project was further expanded to Phase II of CSSTP-0006-00 (327), P.I. Number 0006327. Phase II includes the Patrick Mill Road widening from SR 316 to the railroad overpass and new roadway construction from Pearl Pentecost Road to SR 211. However, now the two projects are programmed for design and construction under project number CSSTP-0006-00 (327), P.I. Number 0006327 as the West Winder Bypass.

Land Use Trends Impacting Transportation

The current land use surrounding the intersection of the Patrick Mill Road at SR 8 includes primarily industrial, manufacturing and commercial businesses. However, along Patrick Mill Road are several side streets consisting of residential subdivisions, schools and churches. The land use trend of maintaining industrial and commercial businesses in this area with residential land uses being developed on the side streets of Patrick Mill Road between SR 316 and SR 8 is reflected in the Barrow County Future Land Use Map (1999-2018).

Logical Termini

The logical southern terminus of the proposed West Winder Bypass would occur at the intersection of Tom Miller Road relocated approximately 1,000 feet south of SR 316. At this intersection, 42% of the traffic turns left onto Tom Miller Road. Tom Miller Road has two schools and there are plans to construct a third school. Tom Miller Road intersects with SR 81 near the Walton County line. Consequently, residential commuters and commercial traffic from the north side of SR 316 travel to and from Tom Miller Road.

The logical northern terminus of the proposed project is at the intersection with SR 211. It's at this intersection that West Winder Bypass joins SR 211 traffic from downtown Winder. There is a project listed on the 2030 Regional Transportation Plan that includes the widening of SR 211 from the West Winder Bypass to the I-85 interchange (BA-013), consequently, this intersection was chosen as the logical northern terminus.

Annual Daily Traffic Volumes and Levels of Service

The existing roadway of SR 8 near the CSX railroad crossing is operating at a level of service "D" under current peak hour conditions and Patrick Mill Road currently operates at level of service "C". Level of service (LOS) is a qualitative measurement of traffic flow, which ranges from "A" (unimpeded, free-flowing traffic) through "F" (virtual gridlocked traffic). These roadways currently serve local and commercial traffic in the area. The commercial, industrial and residential land uses along Patrick Mill Road and SR 8 contribute to the 6,630 vehicles per day (vpd) and 16,840 vpd, respectively on these existing facilities. Trucks contribute 34% of the 24-hour traffic volume on SR 8 and 22% of the traffic on Patrick Mill Road.

The average traffic growth rate in this area of Barrow County was determined to be 4.8% per year. However, this growth rate would not be sustained on the state routes, which are the primary routes of diversion. The state routes were increased according to their own average traffic growth rates of 2.5% for SR 211 and 2.6 % for SR 8. As a result of these traffic growth rates, it is projected that traffic will more than double by the year 2029. The West Winder Bypass project is proposed to relieve traffic on these facilities as shown in the table below.

Roadway	Current 2005 AADT (vpd)	LOS	2029 No-Build AADT (vpd)	LOS	2029 Build AADT (vpd)	LOS
Patrick Mill Rd	6,630	C	20,500	F	24,900	C*
SR 8	16,840	D	31,200	F	20,200	D
SR 211	13,860	D	25,000	F	16,200	D
Pearl Pentecost Rd	2,985	B	9,200	C	6,200	B

*** Patrick Mill Road would be widened to four lanes in the build condition.**

Patrick Mill Road and SR 8 are currently two-lane roadways that are inadequate to handle the projected industrial/commercial traffic of the west side of Winder. Traffic would be diverted from SR 8, SR 211 and Pearl Pentecost Road to the West Winder Bypass, thus allowing these facilities to operate at acceptable levels of service.

Intersection levels of service were determined at each of the major intersections of the project and are shown in the table on the next page. Existing intersection levels of service range from A to D with the exception of Patrick Mill Road at Tom Miller Road/Fairlong Way, which operates at LOS F during the A.M. peak hour. This intersection may need to be signalized due to the number of left turns from Patrick Mill Road to Tom Miller Road. The projected levels of service are anticipated to decline to LOS F at all of the major intersections by the 2029 design year if no action is taken. Under the build condition, the proposed major intersections would operate at LOS D or better in the design year (2029).

Summary of HCS Analysis Results

Intersections	Existing Year 2005		No-Build Year 2029		Proposed Design - Year 2029	
	AM	PM	AM	PM	AM	PM
Patrick Mill Rd @ Tom Miller Rd/Fairlong Way	F*	D*	F	F	D	C
Patrick Mill Rd @ SR 316	C	C	F	F	--	--
West Winder Bypass @ SR 316 EB Off-Ramp	--	--	--	--	C	C
West Winder Bypass @ SR 316 WB Off-Ramp	--	--	--	--	C	B
Patrick Mill Rd @ Fred Kilcrease Rd	B*	B*	F	F	C	D
Patrick Mill Rd @ Bill Rutledge Rd	C*	B*	F	F	---	---
Patrick Mill Rd @ Carl Bethlehem Rd	B*	B*	F	F	C	C
Patrick Mill Rd @ Burson Maddox Rd	B*	B*	F	F	D*	E*
Patrick Mill Rd @ Plantation Rd	B*	B*	F	F	---	---
Patrick Mill Rd @ Mathews School Rd	B*	B*	F	F	---	---
Patrick Mill Rd @ West Winder Industrial Pkwy	B*	C*	F	F	---	---
West Winder Bypass @ Mathews School Rd	---	---	---	---	C	C
Patrick Mill Rd @ SR 8	B*	D*	F	F		
Mathews School Rd @ SR 8	---	---	---	---	B	B
Bankhead Hwy @ Pearl Pentecost Rd	B*	B*	F	F	---	---
Connector Road @ Bankhead Hwy	---	---	---	---	B	B
West Winder Bypass @ Connector Road	---	---	---	---	B	B
West Winder Bypass @ Pearl Pentecost Rd	---	---	---	---	C	C
West Winder Bypass @ SR 211	---	---	---	---	B	B

* For unsignalized intersections, LOS is given for minor street approach.

Crash Data

An inventory of crash data from 2001 to 2003 is provided in the table on the next page. The table lists the total number of accidents and injuries coded to roadway segments of Patrick Mill Road, SR 8 and SR 211 that are improved by the West Winder Bypass project. Two fatalities were recorded during 2001 and 2003 along a short section of SR 8 at or near Patrick Mill Road. Additionally, there was one fatality at the intersection of Patrick Mill Road at SR 316 in 2001.

Crash Data

Comparison to Statewide Rates for Major Collectors

Roadway Segment	Year	No. Of Accidents	Accident Rate *(Statewide)*	No. Of Injuries	Injury Rate *(Statewide)*	No. Of Fatalities	Fatality Rate *(Statewide)*
SR 8 (1.71 mi)	**2001**	20	289 *(185)*	15	217 *(98)*	1	14.5 *(2.28)*
	2002	30	332 *(195)*	6	66 *(104)*	0	00.0 *(2.37)*
	2003	42	400 *(211)*	15	143 *(110)*	1	9.5 *(2.95)*
SR 211 (3.46 mi)	**2001**	97	488 *(185)*	32	161 *(98)*	0	00.0 *(2.28)*
	2002	88	541 *(195)*	29	178 *(104)*	0	00.0 *(2.37)*
	2003	79	451 *(211)*	29	166 *(110)*	0	00.0 *(2.95)*
Patrick Mill Rd (2.22 mi)	**2001**	28	606 *(185)*	13	281 *(98)*	1	21.6 *(2.28)*
	2002	39	802 *(195)*	11	226 *(104)*	0	00.0 *(2.37)*
	2003	47	921 *(211)*	24	470 *(110)*	0	00.0 *(2.95)*

The results indicate that Patrick Mill Road, SR 8 and SR 211, all currently have accident, injury and fatality rates above the average rates as compared to similar major collectors statewide. There were seven angle collisions and three rear-end accidents at the intersection of SR 8 and the at-grade railroad crossover. One of these accidents resulted in a fatality. Proposed construction of the West Winder Bypass would result in a decrease in traffic using the SR 8 at-grade railroad crossover and decrease traffic on SR 211. Consequently, the West Winder Bypass project would reduce the risk of various common accidents, specifically rear-end and angle collisions at intersections and at the railroad crossing.

In summary, the proposed construction of the West Winder Bypass would correct the existing roadway deficiencies, improve traffic operations and increase the capacity of the roadway to facilitate the projected traffic growth.

Other Projects in the Area

- GDOT Project 0001038 – SR 124 @ SR 211
- GDOT Project 0001816 – 6th Street/CR 326 Grade Separation @ CSX RR
- GDOT Project 0002248 – Winder Downtown Streetscape Project
- GDOT Project 0006449 – Upgrade Traffic Signals @ Various locations in Barrow County
- GDOT Project 0007356 – CR 714/North Williams Street @ CSX #640124J
- GDOT Project 0007356 – SR 8@ SR 324 & @ CR 326 & @ CR 327 & @ CR 328
- GDOT Project 110620 – I-85 from north of SR 211 to north of SR 60 in Jackson County
- GDOT Project 121730 – SR 988/Winder East bypass from SR 316 to SR 53
- GDOT Project 122870 – SR 316 in Barrow and Oconee Counties – 26 interchanges
- GDOT Project 132970 – SR 11/Winder-Monroe Hwy @ Marburg Creek south of Winder
- GDOT Project 132971 – SR 11/Winder-Monroe Hwy @ Scott Creek 1.7 miles south of Bethlehem

- GDOT Project 171290 – CR 67/Etheridge Road @ CSX Railroad #640141A
- GDOT Project M003152 – SR 211 from SR 316/US 29 to SR 11/Statham Road
- GDOT Project s007743 – Three streets in the City of Winder

Project location: The proposed West Winder Bypass is located in Barrow County west of the city of Winder. The proposed project is located along existing Patrick Mill Road from milepost 0.81 to 2.71. The project then continues on new location crossing Pearl Pentecost Road and ties into SR 211 at milepost 2.14.

Description of the approved concept: The proposed project would widen Patrick Mill Road/CR 93 from a two-lane to a four-lane divided highway with a 24-foot raised median from Tom Miller Road to approximately 1,000 feet south of Burson Maddox Road. The roadway would continue north on new location, bridge over SR 8, the CSX railroad track and Bankhead Highway, cross Pearl Pentecost Road and connect to SR 211. The total length of the project would be approximately 5.0 miles. The project would also include a full-diamond interchange at SR 316 and connector roadways from the West Winder Bypass to SR 8 and to Bankhead Highway.

West Winder Bypass alignment was revised to curve south and cross Pearl Pentecost Road and continue parallel to Cedar Creek through property owned by Barrow County and then tie in to SR 211 at milepost 2.14 approximately 3,000 feet south of the original alignment. The alignment was moved to prevent impacting a historic resource.

PDP Classification: Major_____**X**_____ Minor_____

Federal Oversight: Full Oversight ( ), Exempt (**X**), State Funded ( ), or Other ( )

Functional Classification:

Phase 1:

- West Winder Bypass - Rural Major Arterial
- Matthews School Rd - Rural Local Rd
- SR 8 - Rural Major Collector
- Bankhead Hwy - Rural Local Rd
- Pearl Pentecost Rd – Rural Local Rd
- SR 211 - Rural Major Collector

Phase 2:

- West Winder Bypass - Rural Major Arterial
- Fred Kilcrease Rd - Rural Local Rd
- Bill Rutledge Rd - Rural Local Rd
- Carl Bethlehem Rd - Rural Major Collector
- Burson Maddox Rd - Rural Local Rd

Phase 3:

- West Winder Bypass – Rural Major Arterial
- Tom Mill Rd - Rural Local Rd
- SR 316 – Rural Principal Arterial

U.S. Route Number(s): N/A **State Route Number(s):** SR 8, SR 211, SR 316

Traffic (AADT) as shown in the approved concept:

Base Year: (2009) 18,100 Design Year: (2029) 26,700

Updated traffic data (AADT):

Base Year: (2020) 15,400 Design Year: (2040) 26,600

Approved Programmed/Schedule:

P.E: 2005 R/W: 2015 Construction: 2018

VE Study Required: Yes (X) No ( )

A Value Engineering Study was conducted in April, 2010 and implemented in July 2010. The following revisions are to be made to minimize right-of-way and environmental impacts and reduce construction and right-of-way acquisition costs for the project (Recommendations not meeting current GDOT policy may require a design variance):

- Realign Railroad Bridge over SR 8 closer to a 90 degree skew. (Phase 1)
- Reduce the concrete paved shoulder widths on the ramps from 6 foot inside and 10 foot outside to 4 foot inside and 8 foot outside. (Phase 3)
- Move Burson Maddox Road Intersection 300 ft south of original design. (Phase 2)
- Shorten the ramps to and from SR 316 to the new West Winder Bypass (Phase 3)
- Reduce the inside lane width from 12 feet wide to 11 feet wide.(All Phases)
- Revise the alignment of Matthews School Road to connect to SR 8 close to the existing intersection. (Phase 1)
- Reduce concrete paved shoulder widths on the ramps to and from SR 316 and the new West Winder Bypass. (Phase 3)
- Reduce the 24 foot median width to a 20 foot median width. (All Phases)
- Reduce the outside paved shoulder width from 6.5 feet to 4 feet wide. (All Phases)
- The VE study recommends a 10 foot bridge shoulder width. However, 8 foot shoulders will be utilized due to a change in standards in the Bridge & Structural Design Policy Manual. (Phase 1 & 3)
- Using 4:1 slopes in lieu of 6:1. (All Phases)
- Reduce turn lane storage lengths at the intersection of Carl Bethlehem Road and West Winder Bypass. (Phase 2)

Benefit/Cost Ratio: 1.23

Is the project located in an Ozone Non-attainment area? Yes (X) No ( )

Is the project in a PM2.5 Non-Attainment area? Yes (X) No ( )

The proposed project is described as reconstruction/new construction of the West Winder Bypass from 2 to 4 lanes from 0.18 miles south of SR 316 (University Parkway) to SR 211. The project is included in the Atlanta Regional Commission's (ARC) adopted 2030 Regional Transportation Plan as project BA-005. Right-of-Way funding for this project is programmed for fiscal year 2015. The project has a proposed opening year of 2020 and is included in the ARC model. (See attachement for the conforming schematic plan for the project.)

Approved features:	**Proposed Features**:
The proposed project would begin at Patrick Mill Road/CR 93 and would continue north on new location, bridge over SR 8, the CSX railroad track and Bankhead Highway, cross Pearl Pentecost Road and connect to SR 211. The total length of the project would be approximately 5.0 miles. The project would also include a full-diamond interchange at SR 316 and connector roadways from the West Winder Bypass to SR 8 and to Bankhead Highway.	The features from the approved concept report being revised are: splitting the project into three individual projects (phases), and reductions to the lane width, shoulders, and median. Phase 1: Project Length: 2.26 miles Phase 1 is located in the northern section of the overall West Winder Bypass from Matthews School Road to SR 211. Located at milepost 2.70 to milepost 4.96. Phase 2: Project Length: 1.94 miles Phase 2 consists of the southern section of the overall West Winder Bypass from SR 316 to Matthews School Road. Located at milepost 0.76 to milepost 2.70. Phase 3: Project Length: 0.76 miles Phase 3 would be of the new full-diamond interchange created at the Bypass and SR 316. Located at milepost 0.00 to milepost 0.76.

Reason for Change:
The project is proposed to be split up into three separate phases for project funding purposes. The implementations of the recommendations from the Value Engineering Study lead to the changes in the lane width, shoulders, and median.

Potential Environmental Impacts of Proposed Revision: Environmental impacts are reduced by narrowing the typical section. The roadway median type of the typical section was revised from a 24' to a 20'raised concrete median, the inside lane and shoulder widths are also reduced. Another opportunity for public involvement will be available at the PIOH scheduled in the fall of 2011.

Have Proposed Revisions Been Reviewed by Environmental Staff? (X) Yes ( ) No

Environmental Responsibilities: Barrow County, Consultant, GDOT

Scheduling – Responsible Parties' Estimate:
Time to complete the environmental process: Phase 1 & 2 = 1/6/09 to 3/29/13
Time to complete preliminary construction plans: Phase 1 & 2 = 10/29/11 to 7/16/13
Time to complete right-of-way plans: Phase 1 & 2 = 8/12/13 to 5/15/14
Time to complete the Section 404 Permit: Phase 1 & 2 = 1/19/15 to 1/5/16
Time to complete final construction plans: Phase 1 & 2 = 6/2/14 to 10/15/16
Time to complete the purchase of right-of-way: Phase 1 & 2 = 5/19/14 to 12/27/16
List other major items that will affect the project schedule: An internal IJR may be required prior to programming Phase 3.

Updated Cost Estimate
Phase 1: Total Construction Cost - $22,313,012.39 Right of Way Cost - $11,360,000.00 Environmental Mitigation - $324,330.00 Utility Total - $3,661,993.00 Phase 2: Total Construction Cost - $9,989,095.43 Right of Way Cost - $6,180,000.00 Environmental Mitigation - $149,900.00 Utility Total - $1,714,671.00 Phase 3: Total Construction Cost - $14,411,712.17 Right of Way Cost - $14,820,000.00 Environmental Mitigation - $14,700.00 Utility Total - $2,939,436.00

Recommendation: It is recommended that the proposed revisions to the concept report be approved for implementation.

Attachments:
1. Location Map
2. Schematic Plan
3. Benefit Cost Analysis
4. Revised Typical Sections
5. Cost Estimates
6. Jurisdictional Water Map (2)
7. VE Implementation Letter
8. PFA

Concur: _____
Director of Engineering

Approve: _____ 5/26/11
Chief Engineer Date

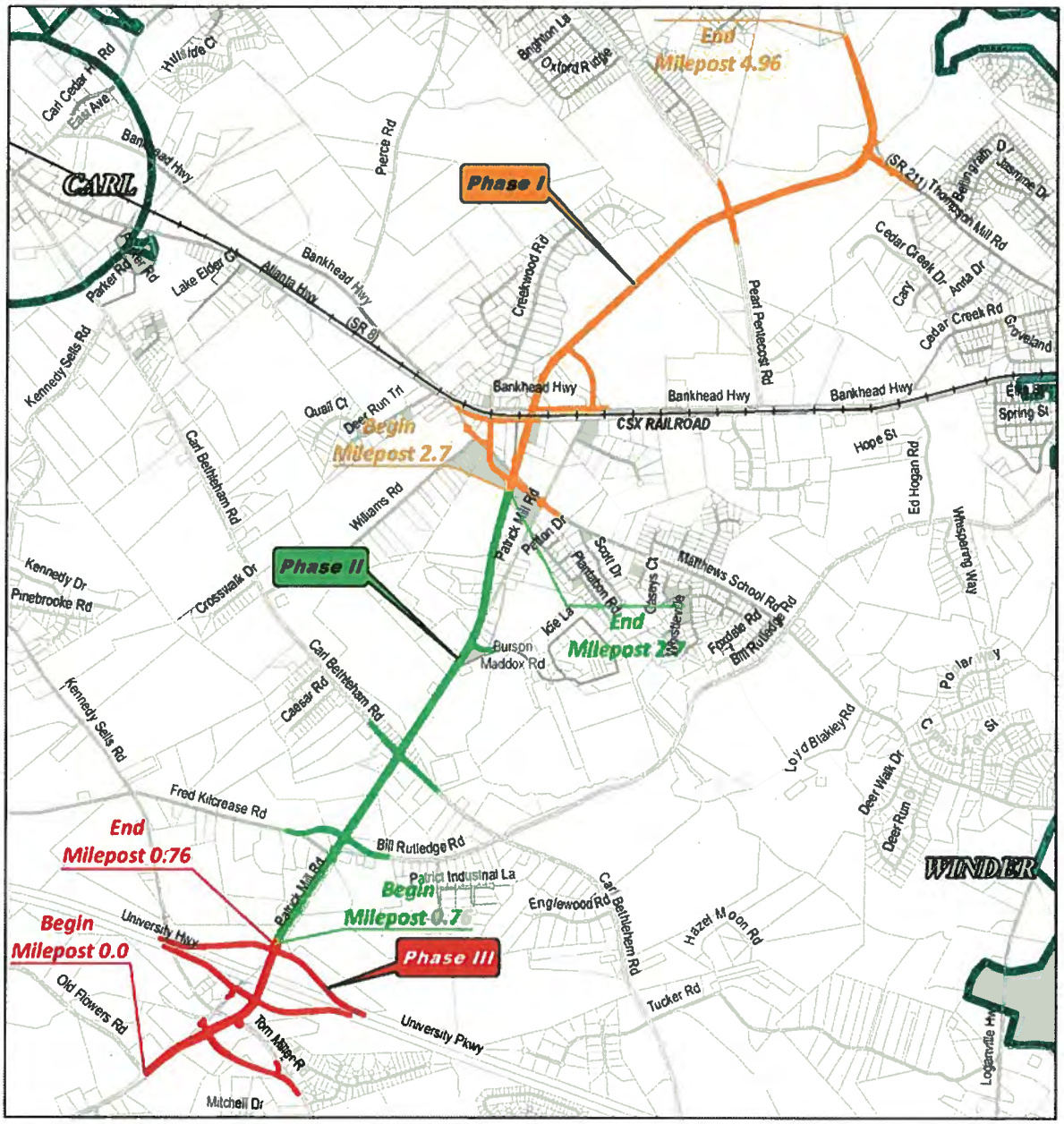

Source: Barrow County GIS

2-21-11

Project Location Map

Phase I
Phase II
Phase III

0 2,500 5,000 Feet

CSSTP-0006-00(327)
PI# 0006327
West Winder Bypass
Barrow County, Georgia

N

West Winder Bypass – Schematic Plan

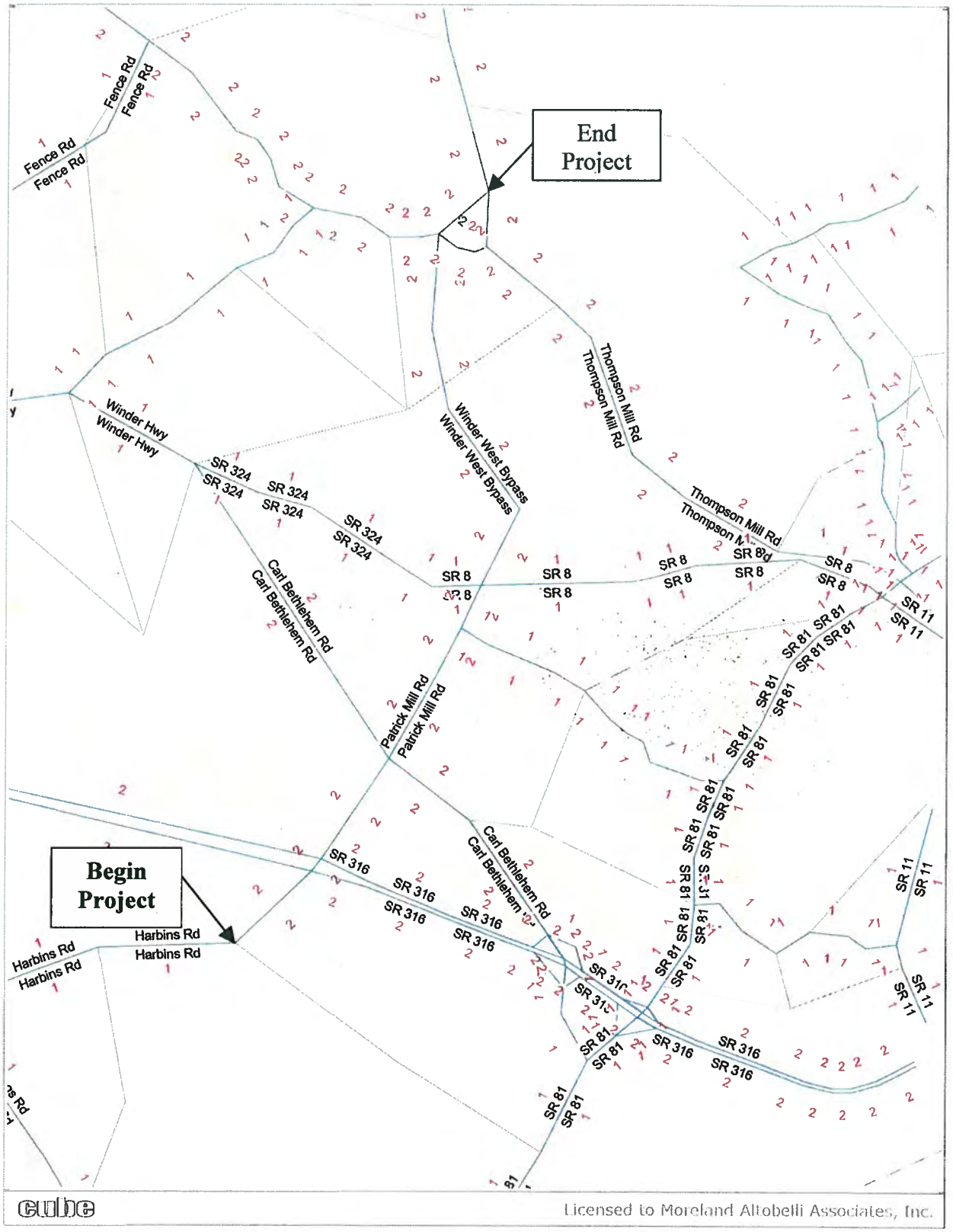

GDOT Benefit-Cost Calculator

enter information in green cells

Project Information

ID	
Description	

Cost Estimate

Date of estimate	2/28/11
PE cost	$2,030,000.00
ROW cost	$32,360,000.00
UTILITY cost	$8,916,100.00
CST cost	$47,200,972.49
Total	$90,507,072.49

Traffic in 2040

Source of traffic data	Design traffic provided by PE consultant (Moreland Altobelli Associates, Inc.)
Without project (nobuild)	
Annual VMT	27,510,000
Annual VHT	1,023,828.41
Average speed (mph)	26.870
With project (build)	
Annual VMT	26,995,500
Annual VHT	599,900.00
Average speed (mph)	45.000

Parameters	Default	Override	Used
Analysis year	2035	2040	2040
Discount rate	7.0%		7%
Design life (years)	25	20	20
Base year of cost estimate	N/A	2010	2010
Current CST program year	N/A	2020	2020
Fuel price ($/gallon)	3.22		3.22
Fuel economy (mpg)	18.03		18.03
Value of auto travel ($/hr)	13.75		13.75
Value of truck travel ($/hr)	72.65		72.65
Percent trucks	12%	8%	8%
Include GSP benefits	No	No	No

Costs		
Total cost	$	90,507,072
Annualized cost	$	**6,443,085**
Auto Delay Costs		
Nobuild	$	12,951,429
Build	$	7,588,735
Auto delay savings	$	**5,362,694**
Truck Delay Costs		
Nobuild	$	5,950,491
Build	$	3,486,619
Truck delay savings	$	**2,463,872**
Fuel Costs		
Nobuild	$	4,913,045
Build	$	4,821,160
Fuel cost savings	$	**91,885**
Change in GSP		NA
Auto delay cost adjustment		NA
Truck delay cost adjustment		NA
Fuel cost adjustment		NA
Total benefit adjustment		**NA**
Benefits in 2040	$	**7,918,452**
Benefit-Cost Ratio		**1.23**

Notes

Severe difference between build and no-build average speeds are accounted by the fact that there is a large difference in vehicle-hours delays, from which the average speed is calculated.

Benefit Input Calculations for No-Build Scenario			
Project Name: West Winder Bypass			
Calculations of Annual VMT without Project			
Corridor Description (No-Build Scenario)	**Length (miles)**	**ADT**	
Patrick Mill Rd. from "A" to SR 316	0.40	12700	
Patrick Mill Rd. from SR 316 to US 29/SR 8.	2.50	11750	
US 29/SR 8 from Patrick Mill Rd. to SR 211	2.40	19850	
SR211 from US 29/SR 8 to "B"	2.30	12150	
Year 2040 Design Year ADT for Corridor			14479
Corridor Length without Project (A to B in Miles)			7.60
Annual VMT Without Project	**Vehicles per day x 260**	**Travel Distance**	**VMT**
	3,619,737	7.60	27,510,000
Calculations of Annual VHT without Project			
Corridor Description of Sugarloaf Pkwy (Build Scenario)	**Length (miles)**	**Proportions**	**Travel Speed***
Patrick Mill Rd. from "A" to SR 316	0.40	0.05	29.60
Patrick Mill Rd. from SR 316 to US 29/SR 8.	2.50	0.33	30.10
US 29/SR 8 from Patrick Mill Rd. to SR 211	2.40	0.32	23.50
SR211 from US 29/SR 8 to "B"	2.30	0.30	26.40
** Travel Speed Determined from HCS analysis*			
Average Travel Speed under No-Build Scenario			26.87
Peak Travel Time through Corridor in Hours Without Project (Total Length x Average Travel Speed)			0.28
Annual VHT Without Project	**Vehicles per day x 260**	**Peak Travel Time**	**VHT**
	3,619,737	0.28	1,023,828

Benefit Input Calculations for Build Scenario			
Project Name: West Winder Bypass			
Calculations of Annual VMT with Project			
Corridor Description of Sugarloaf Pkwy (Build Scenario)	**Length (miles)**	**Proportions**	**Year 2040 Build ADT**
Patrick Mill Rd. from "A" to Tom Miller Rd.	0.20	0.04	14500
Patrick Mill Rd. from Tom Miller Rd. To SR 316	0.20	0.04	26600
Patrick Mill Rd. from SR 316 to Bill Rutledge	0.80	0.17	26300
Patrickvk Mill Rd. from Bill Rutledge to Carl Bethlehem	0.40	0.08	24000
From Carl Bethlehem to Burson Maddox	0.40	0.08	23700
From Burson Maddox to Matthews School Rd.	0.70	0.15	23600
Matthews School Rd. to Connector Rd.	0.40	0.08	21700
Connector Rd. to Pearl pentecost Rd.	0.82	0.17	22100
Pearl Pentecost Rd. to "B" (SR 211)	0.85	0.18	19200
Year 2040 Design Year ADT for Corridor			22638
Corridor Length with Project (A to B in Miles)			4.77
Annual VMT With Project	**Vehicles per day x 250**	**Travel Distance**	**VMT**
	5,659,434	4.77	26,995,500
Calculations of Annual VHT with Project			
Corridor Description of Sugarloaf Pkwy (Build Scenario)	**Length (miles)**	**Proportions**	**Travel Speed***
Patrick Mill Rd. from "A" to Tom Miller Rd.	0.20	0.04	45.00
Patrick Mill Rd. from Tom Miller Rd. To SR 316	0.20	0.04	45.00
Patrick Mill Rd. from SR 316 to Bill Rutledge	0.80	0.17	45.00
Patrickvk Mill Rd. from Bill Rutledge to Carl Bethlehem	0.40	0.08	45.00
From Carl Bethlehem to Burson Maddox	0.40	0.08	45.00
From Burson Maddox to Matthews School Rd.	0.70	0.15	45.00
Matthews School Rd. to Connector Rd.	0.40	0.08	45.00
Connector Rd. to Pearl pentecost Rd.	0.82	0.17	45.00
Pearl Pentecost Rd. to "B" (SR 211)	0.85	0.18	45.00
** Travel Speed Determined from HCS analysis*			
Average Travel Speed under Build Scenario			45.00
Peak Travel Time through Corridor in Hours With Project (Total Length x Average Travel Speed)			0.11
Annual VHT With Project	**Vehicles per day x 250**	**Peak Travel Time**	**VHT**
	5,659,434	0.11	599,900

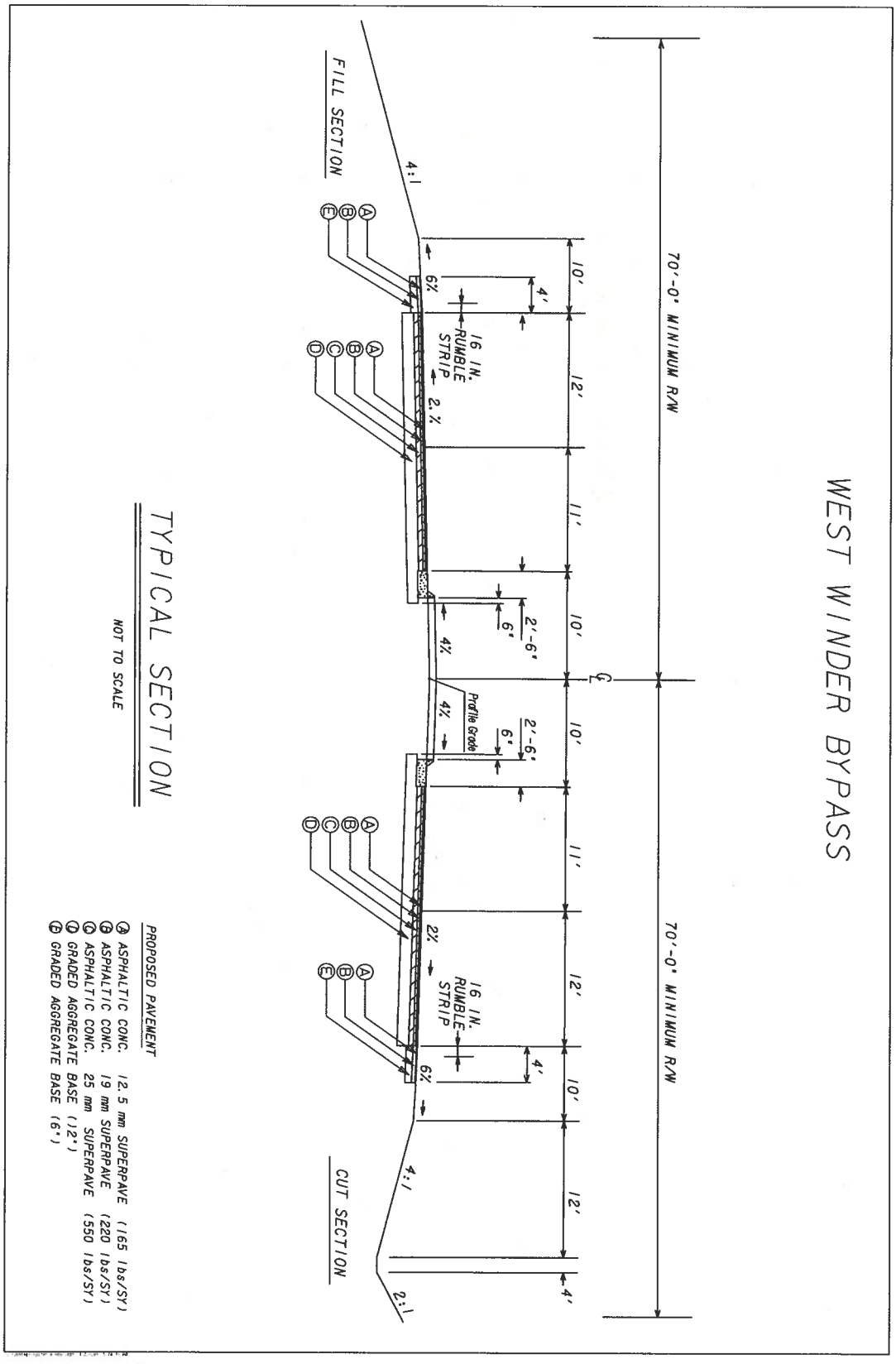
WEST WINDER BYPASS
70'-0" MINIMUM R/W
70'-0" MINIMUM R/W
FILL SECTION
CUT SECTION
4:1
4:1
2:1
10'
12'
11'
10'
11'
12'
10'
12'
4'
4'
6%
6%
4%
4%
2%
2.%
16 IN. RUMBLE STRIP
16 IN. RUMBLE STRIP
2'-6"
6'
2'-6"
6'
Profile Grade
TYPICAL SECTION
NOT TO SCALE
PROPOSED PAVEMENT
(A) ASPHALTIC CONC. 12.5 mm SUPERPAVE (165 lbs/SY)
(B) ASPHALTIC CONC. 19 mm SUPERPAVE (220 lbs/SY)
(C) ASPHALTIC CONC. 25 mm SUPERPAVE (550 lbs/SY)
(D) GRADED AGGREGATE BASE (12")
(E) GRADED AGGREGATE BASE (6")

SR 316 RAMPS

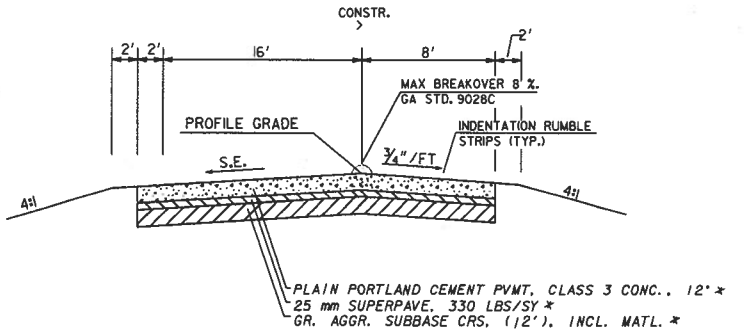

*PAVEMENT SECTION FOR ESTIMATION PURPOSES ONLY

SUPER ELEVATION SECTION

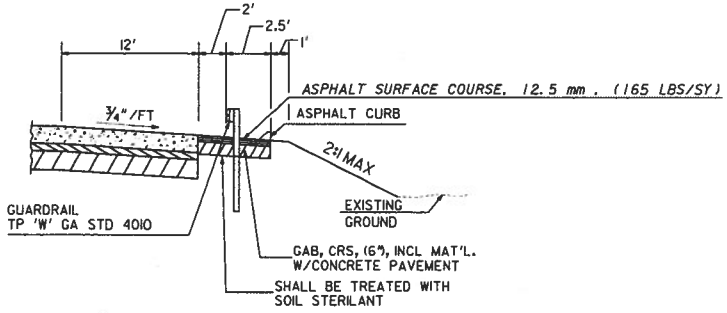

SHOULDER DETAIL FOR GUARDRAIL W/CONCRETE PAVEMENT

(SEE PLANS FOR LOCATION)
(SEE GA. STD. 4051 FOR DETAILS)
N.T.S.

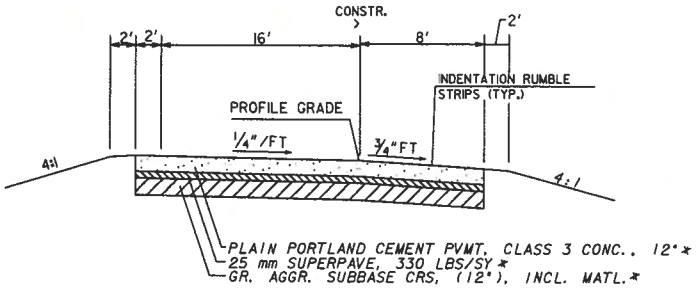

*PAVEMENT SECTION FOR ESTIMATION PURPOSES ONLY

NORMAL CROWN SECTION

TYPICAL SECTION

NOT TO SCALE

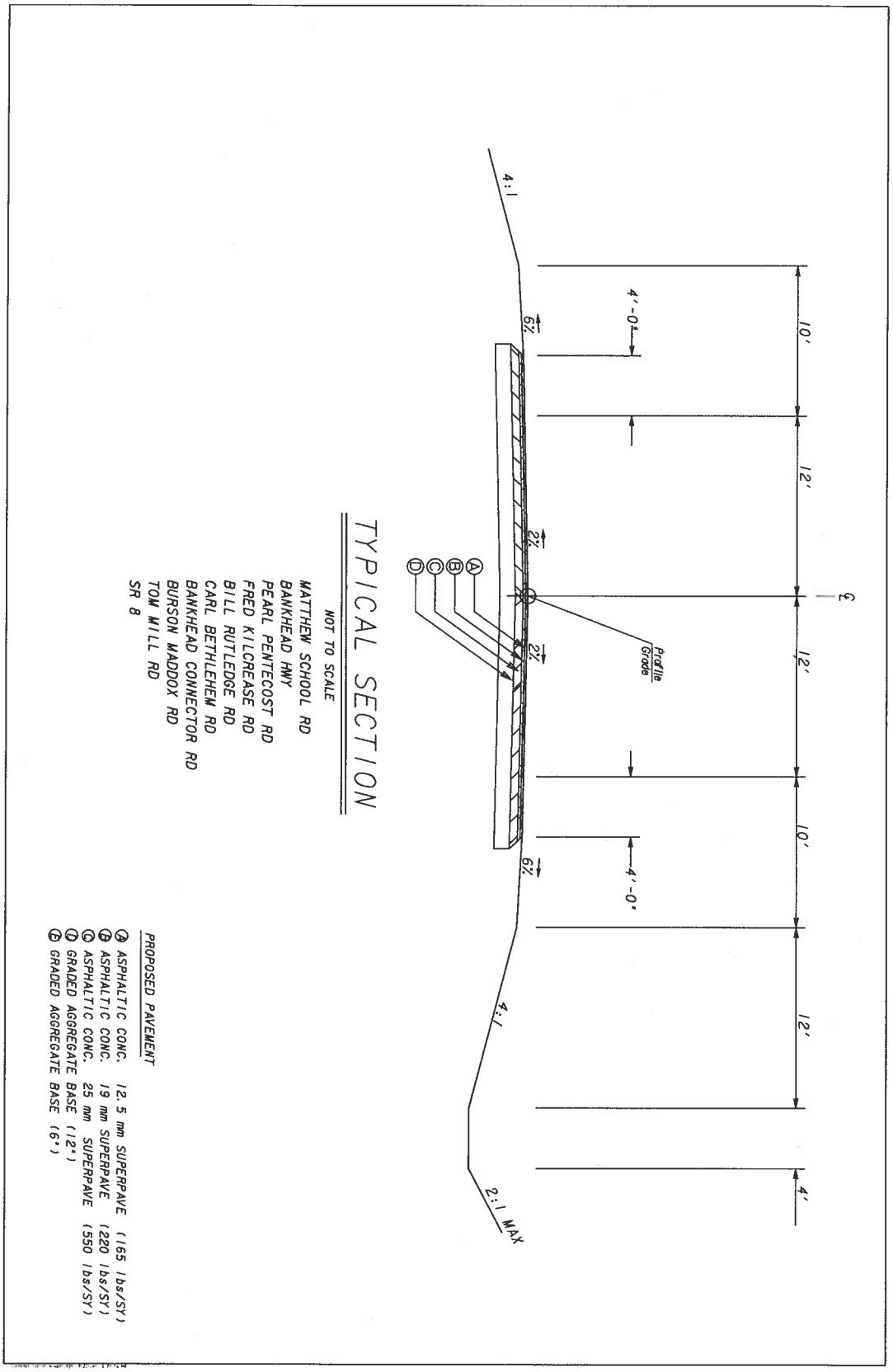

TYPICAL SECTION

NOT TO SCALE

MATTHEW SCHOOL RD
BANKHEAD HWY
PEARL PENTECOST RD
FRED KILCREASE RD
BILL RUTLEDGE RD
CARL BETHLEHEM RD
BANKHEAD CONNECTOR RD
BURSON MADDOX RD
TOM MILL RD
SR 8

PROPOSED PAVEMENT

Ⓐ ASPHALTIC CONC. 12.5 mm SUPERPAVE (165 lbs/SY)
Ⓑ ASPHALTIC CONC. 19 mm SUPERPAVE (220 lbs/SY)
Ⓒ ASPHALTIC CONC. 25 mm SUPERPAVE (550 lbs/SY)
Ⓓ GRADED AGGREGATE BASE (12")
Ⓔ GRADED AGGREGATE BASE (6")

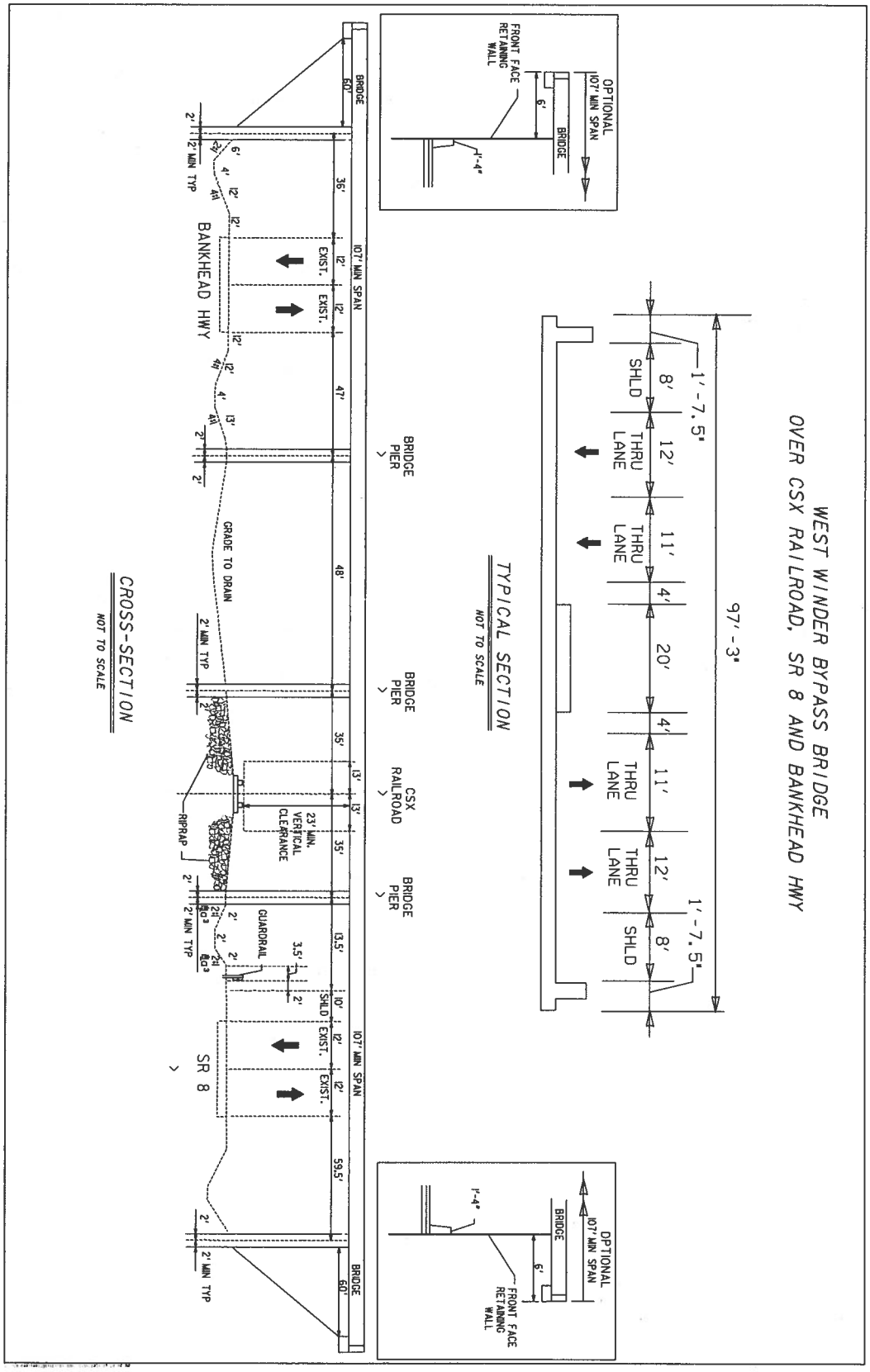
WEST WINDER BYPASS BRIDGE
OVER CSX RAILROAD, SR 8 AND BANKHEAD HWY
97' - 3"
1' - 7.5"
SHLD
8'
THRU LANE
12'
11'
4'
20'
1' - 7.5"
TYPICAL SECTION
NOT TO SCALE
OPTIONAL 107' MIN SPAN
BRIDGE
6'
FRONT FACE RETAINING WALL
1'-4"
BRIDGE PIER
CSX RAILROAD
BANKHEAD HWY
SR 8
EXIST.
107' MIN SPAN
GRADE TO DRAIN
RIPRAP
23' MIN. VERTICAL CLEARANCE
GUARDRAIL
SHLD
CROSS-SECTION
NOT TO SCALE

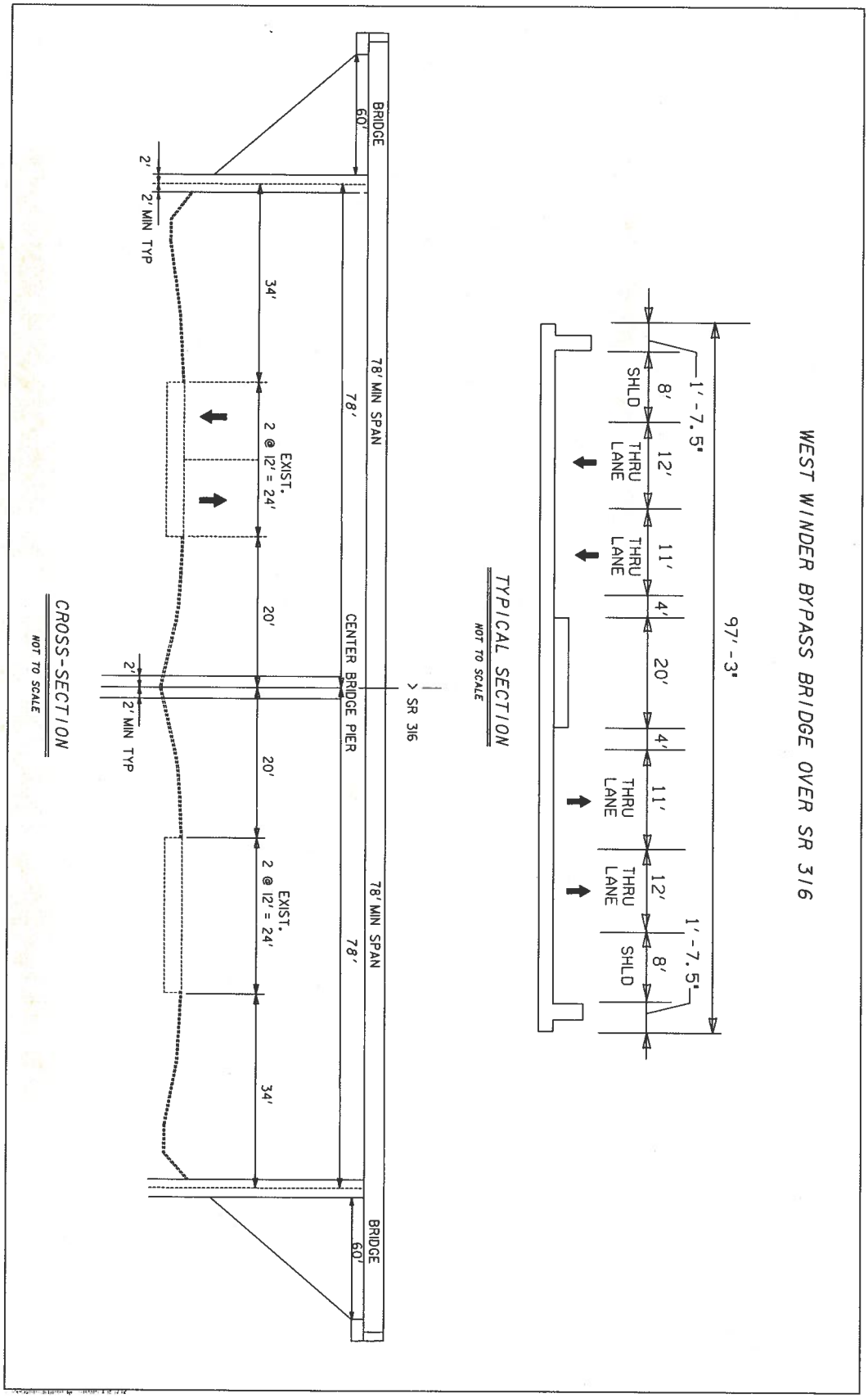
WEST WINDER BYPASS BRIDGE OVER SR 316
97' - 3"
1' - 7.5"
8'
SHLD
12'
THRU LANE
11'
THRU LANE
4'
20'
4'
11'
THRU LANE
12'
THRU LANE
8'
SHLD
1' - 7.5"
TYPICAL SECTION
NOT TO SCALE
BRIDGE
60'
2'
2' MIN TYP
34'
78' MIN SPAN
78'
EXIST. 2 @ 12' = 24'
20'
CENTER BRIDGE PIER
2'
2' MIN TYP
> SR 316
20'
EXIST. 2 @ 12' = 24'
78' MIN SPAN
78'
34'
BRIDGE
60'
CROSS-SECTION
NOT TO SCALE

TOTAL PROJECT COST SUMMARY

	PHASE 1	PHASE 2	PHASE 3
Subtotal Construction Cost:	**$18,813,185.53**	**$8,091,351.91**	**$12,983,368.40**
Engineering and Inspection @ 5%:	$940,659.28	$404,567.60	$649,168.42
Fuel Adjustment:	$841,629.84	$493,836.15	$327,869.48
Liquid AC Adjustment:	$1,717,537.74	$999,339.77	$451,305.87
Total Construction Cost:	**$22,313,012.39**	**$9,989,095.43**	**$14,411,712.17**
Right of Way:	$11,360,000.00	$6,180,000.00	$14,820,000.00
Environmental Mitigation:	$324,330.00	$149,900.00	$14,700.00
Utility Total:	$3,661,993.00	$1,714,671.00	$2,939,436.00
PHASE TOTAL	**$37,659,335.39**	**$18,033,666.43**	**$32,185,848.17**
GRAND TOTAL PROJECT COST	**$87,878,849.98**		

TOTAL COST SUMMARY - PHASE 1

Subtotal Construction Cost:	**$18,813,185.53**
Engineering and Inspection @ 5%:	$940,659.28
Fuel Adjustment:	$841,629.84
Liquid AC Adjustment:	$1,717,537.74
Total Construction Cost:	**$22,313,012.39**
Right of Way:	$11,360,000.00
Environmental Mitigation:	$324,300.00
Utility Total:	$3,661,993.00
PHASE TOTAL	**$37,659,305.39**

Environmental Mitigation Summary - Phase 1

Descripion	Credits	Cost per Credit	Total
Ephemeral 11	0.05	$7,500	$375.00
Ephemeral 14	0	$7,500	$0.00
Ephemeral 16	0.58	$7,500	$4,350.00
Pond 9	0	$7,500	$0.00
Stream 10	75	$70	$5,250.00
Stream 13	729	$70	$51,030.00
Stream 15	858	$70	$60,060.00
Stream 16	1152	$70	$80,640.00
Wetland 12	1.99	$7,500	$14,925.00
Wetland 17	0.56	$7,500	$4,200.00
Wetland 18	13.68	$7,500	$102,600.00
Wetland 19	0.12	$7,500	$900.00
Wetland 20	0	$7,500	$0.00
		Phase 1 Total	**$324,330.00**

(See Jurisdictional Water Map 2 of 2)

STATE HIGHWAY AGENCY

DATE : 05/02/2011

JOB ESTIMATE REPORT

JOB NUMBER : 0006327_PHASE 1 SPEC YEAR: 01
DESCRIPTION: WEST WINDER BYPASS_PHASE 1

ITEMS FOR JOB 0006327_PHASE 1

LINE	ITEM	ALT	UNITS	DESCRIPTION	QUANTITY	PRICE	AMOUNT
0001	001-0000		$	MISC ITEMS CONC. BRIDGE OVER CSX RR	45258.000	100.00	4525800.00
0002	001-1000		*	FORCE ACCOUNT NO. RAILROAD PROTECTIVE INSURANCE	1.000	80711.63	80711.63
0003	150-1000		LS	TRAFFIC CONTROL - CSSTP-0006-00(327)	1.000	100000.00	100000.00
0004	153-1300		EA	FIELD ENGINEERS OFFICE TP 3	1.000	71159.68	71159.69
0005	163-0232		AC	TEMPORARY GRASSING	22.000	240.73	5296.20
0006	163-0240		TN	MULCH	638.000	161.09	102779.67
0007	163-0300		EA	CONSTRUCTION EXIT	9.000	951.10	8559.92
0008	163-0501		EA	CONSTR AND REMOVE SILT CONTROL GATE,TP 1	12.000	738.59	8863.09
0009	163-0502		EA	CONSTR AND REMOVE SILT CONTROL GATE,TP 2	7.000	517.30	3621.11
0010	163-0503		EA	CONSTR AND REMOVE SILT CONTROL GATE,TP 3	50.000	362.00	18100.45
0011	163-0520		LF	CONSTR AND REMOVE TEMP PIPE SLOPE DRAIN	3000.000	11.32	33982.11
0012	163-0528		LF	CONSTR AND REM FAB CK DAM -TP C SLT FN	2400.000	3.11	7473.84
0013	163-0529		LF	CNST/REM TEMP SED BAR OR BLD STRW CK DM	6379.000	2.91	18623.36
0014	163-0531		EA	CONSTR & REM SEDIMENT BASIN,TP 1,STA NO- CSSTP-0006-00(327)	4.00	3201.79	12807.17
0015	163-0550		EA	CONS & REM INLET SEDIMENT TRAP	4.000	149.27	597.11
0016	165-0010		LF	MAINT OF TEMP SILT FENCE, TP A	12757.000	0.49	6313.18
0017	165-0030		LF	MAINT OF TEMP SILT FENCE, TP C	6379.000	0.82	5294.38
0018	165-0041		LF	MAINT OF CHECK DAMS - ALL TYPES	1500.000	1.01	1521.21
0019	165-0060		EA	MAINT OF TEMP SEDIMENT BASIN,STA NO -	4.000	761.66	3046.67
0020	165-0071		LF	MAINT OF SEDIMENT BARRIER - BALED STRAW	3189.000	0.78	2510.80
0021	165-0085		EA	MAINT OF SILT CONTROL GATE, TP 1	12.000	198.58	2382.96
0022	165-0086		EA	MAINT OF SILT CONTROL GATE, TP 2	7.000	198.34	1388.41
0023	165-0087		EA	MAINT OF SILT CONTROL GATE, TP 3	50.000	107.42	5371.17
0024	165-0101		EA	MAINT OF CONST EXIT	9.000	490.21	4411.97
0025	165-0105		EA	MAINT OF INLET SEDIMENT TRAP	4.000	57.17	228.71
0026	167-1000		EA	WATER QUALITY MONITORING AND SAMPLING	2.000	690.00	1380.00
0027	167-1500		MO	WATER QUALITY INSPECTIONS	24.000	614.37	14744.98
0028	171-0010		LF	TEMPORARY SILT FENCE, TYPE A	25514.000	1.55	39573.23
0029	171-0030		LF	TEMPORARY SILT FENCE, TYPE C	12757.000	3.05	39011.42
0030	207-0203		CY	FOUND BKFILL MATL, TP II	559.000	41.72	23322.02
0031	210-0100		LS	GRADING COMPLETE - CSSTP-0006-00(327)	1.000	5750000.00	5750000.00
0032	310-1101		TN	GR AGGR BASE CRS, INCL MATL	95529.000	14.88	1422174.61
0033	402-3121		TN	RECYL AC 25MM SP,GP1/2,BM&HL	29075.000	53.32	1550379.02
0034	402-3130		TN	RECYL AC 12.5MM SP,GP2,BM&HL	12460.000	57.00	710341.61
0035	402-3190		TN	RECYL AC 19 MM SP,GP 1 OR 2 ,INC BM&HL	15054.000	55.14	830099.69
0036	413-1000		GL	BITUM TACK COAT	2420.000	2.16	5227.83
0037	432-0206		SY	MILL ASPH CONC PVMT/ 1.50" DEP	1000.000	7.99	7991.42
0038	433-1000		SY	REINF CONC APPROACH SLAB	600.000	134.16	80498.92
0039	436-1000		LF	ASPH CONC CURB - CSSTP-0006-00(327)	8000.000	9.46	75721.44
0040	441-0016		SY	DRIVEWAY CONCRETE, 6 IN TK	2500.000	29.85	74644.63
0041	441-0204		SY	PLAIN CONC DITCH PAVING, 4 IN	430.000	33.55	14430.75
0042	441-0301		EA	CONC SPILLWAY, TP 1	23.000	1727.33	39728.68
0043	441-0600		CY	CONC HEADWALLS	26.000	989.71	25732.62
0044	441-6740		LF	CONC CURB & GUTTER/ 8"X30" TP7	48900.000	10.02	489992.67
0045	446-1100		LF	PVMT REF FAB STRIPS, TP2,18 INCH WIDTH	630.000	7.39	4660.64
0046	456-2015		GLM	INDENT. RUMB. STRIPS - GRND-IN-PL (SKIP)	1.000	915.56	915.57
0047	500-3101		CY	CLASS A CONCRETE CULVERT @ W. WINDER & PEARL P. RD	300.000	467.49	140248.55
0048	500-3101		CY	CLASS A CONCRETE CULVERT @ CEDAR CREEK	400.000	457.66	183065.22

```
                                                West Winder Bypass_Phase 1 (CES).txt
0049  500-3101  CLASS A CONCRETE                                                CY      20.000      571.05   11421.00
0050  511-1000  BAR REINF STEEL CULVERT @ W. WINDER & PEARL P. RD               LB   39690.000        0.85   33788.89
0051  511-1000  BAR REINF STEEL CULVERT @ CEDAR CREEK                          LB   52920.000        0.83   44274.46
0052  550-1180  STM DR PIPE 18",H 1-10                                         LF     300.000       33.90   10171.79
0053  550-1240  STM DR PIPE 24",H 1-10                                         LF     300.000       43.68   13106.95
0054  550-1300  STM DR PIPE 30",H 1-10                                         LF     300.000       54.03   16211.25
0055  550-1363  STM DR PIPE 36",H 1-10                                         LF     240.000       58.05   13932.00
0056  550-1421  STM DR PIPE 42",H 10-15                                        LF     150.000       85.72   12858.76
0057  550-1482  STM DR PIPE 48",H 15-20                                        LF     100.000      110.71   11071.92
0058  550-1483  STM DR PIPE 48",H 20-25                                        LF     100.000      103.54   10354.04
0059  550-1541  STM DR PIPE 54",H 10-15                                        LF     100.000      112.25   11225.54
0060  550-2180  SIDE DR PIPE 18",H 1-10                                        LF      75.000       28.85    2164.17
0061  550-2240  SIDE DR PIPE 24",H 1-10                                        LF      75.000       34.34    2575.96
0062  550-3324  SAFETY END SECTION 24",STD,4:1                                 EA       4.000      927.47    3709.91
0063  550-3524  SAFETY END SECTION 24",STD,6:1                                 EA       4.000      826.81    3307.26
0064  550-4118  FLARED END SECT 18 IN, SIDE DR                                 EA      20.000      402.63    8052.75
0065  550-4218  FLARED END SECT 18 IN, ST DR                                   EA       8.000      546.00    4368.06
0066  550-4224  FLARED END SECT 24 IN, ST DR                                   EA       6.000      614.87    3689.25
0067  550-4230  FLARED END SECT 30 IN, ST DR                                   EA       4.000      786.90    3147.63
0068  550-4236  FLARED END SECT 36 IN, ST DR                                   EA       4.000      880.15    3520.61
0069  603-2024  STN DUMPED RIP RAP, TP 1, 24"                                  SY    1250.000       42.66   53332.13
0070  603-2182  STN DUMPED RIP RAP, TP 3, 24"                                  SY    1000.000       29.55   29553.15
0071  603-7000  PLASTIC FILTER FABRIC                                          SY    2250.000        3.55    8009.66
0072  611-8050  ADJUST MANHOLE TO GRADE                                        EA       2.000     1875.55    3751.10
0073  620-0100  TEMP BARRIER, METHOD NO. 1                                     LF    7000.000       22.84  159916.05
0074  627-1000  MSE WALL FACE, 0 - 10 FT HT, WALL NO-CSSTP-0006-00(327)        SF    5130.000       41.73  214114.61
0075  627-1010  MSE WALL FACE, 10 - 20 FT HT, WALL NO-CSSTP-0006-00(327)       SF    7740.000       43.04  333144.07
0076  627-1020  MSE WALL FACE, 20 - 30 FT HT, WALL NO-CSSTP-0006-00(327)       SF    5130.000       44.47  228135.97
0077  634-1200  RIGHT OF WAY MARKERS                                           EA     225.000       86.56   19477.29
0078  636-1020  HWY SGN,TP1MAT,REFL SH TP3                                     SF     115.000       16.81    1933.15
0079  636-1029  HWY SGN,TP2 MATL,REFL SH TP 3                                  SF     108.000       16.09    1737.19
0080  636-1031  HWY SIGNS,TP1MTL,RFL SHTG,TP6                                  SF     170.000       16.09    2735.30
0081  636-1032  HWY SIGNS,TP2MATL,RFL SHTG,TP6                                 SF      22.000       16.09     353.98
0082  636-2070  GALV STEEL POSTS, TP 7                                         LF     602.000       32.85   19779.53
0083  636-2072  GALV STEEL POSTS, TP 8                                         LF      43.000        9.94     427.45
0084  636-2080  GALV STEEL STR SHAPE POST                                      LF     357.000       10.45    3732.78
0085  636-3000  DELINEATOR, TP 1                                               EA    3483.000        3.48   12148.53
0086  636-5010  P-IN-PL SIGNS,STL H,HP 12 X 53                                 LB      22.000       52.62    1157.65
0087  636-9094  STEEL WIRE STRAND CABLE, 3/8"                                  LF      22.000        6.42     141.27
0088  639-2002  STRAIN POLE, TP III                                            EA     827.000        3.40    2815.97
0089  639-4003  STRAIN POLE, TP IV                                             EA      10.000      580.24    5802.42
0090  639-4004  GUARDRAIL, TP W                                                LF     525.000       15.00    7875.00
0091  641-1100  GUARDRAIL, TP T                                                LF    4000.000       42.89  171560.00
0092  641-1200  GUARDRAIL ANCHORAGE, TP 1                                      EA      25.000      628.01   15700.38
0093  641-5001  GUARDRAIL ANCHORAGE, TP 12                                     EA      25.000     1715.19   42879.76
0094  641-5012  GUARDRAIL ANCHORAGE, TP 2                                      EA    1000.000        2.02    2027.22
0095  643-8200  BARRIER FENCE (ORANGE), 4 FT                                   LF    1000.000       85.00   85000.00
0096  647-1000  TRAF SIGNAL INSTALLATION NO - CSSTP-0006-00(327) NO.1          LS       1.000    85000.00   85000.00
0097  647-1000  TRAF SIGNAL INSTALLATION NO - CSSTP-0006-00(327) NO.2          LS       1.000    85000.00   85000.00
0098  647-1000  TRAF SIGNAL INSTALLATION NO - CSSTP-0006-00(327) NO.3          LS       1.000    85000.00   85000.00
0099  647-1000  TRAF SIGNAL INSTALLATION NO - CSSTP-0006-00(327) NO.4          LS       1.000    85000.00   85000.00
0100  647-1000  TRAF SIGNAL INSTALLATION NO - CSSTP-0006-00(327) NO.5          LS       1.000    85000.00   85000.00
0101  647-2150  PULL BOX, PB-5                                                 EA       5.000     2021.29   10106.47
0102  653-0110  THERM PVMT MARK, ARROW, TP 1                                   EA       6.000       67.64     405.89
0103  653-0120  THERM PVMT MARK, ARROW, TP 2                                   EA      50.000       68.84    3442.41
0104  653-0170  THERM PVMT MARK, ARROW, TP 7                                   EA       7.000       83.62     501.74
0105  653-0210  THERM PVMT MARK, WORD, TP 1                                    EA       6.000      103.55     724.89
0106  653-1501  THERMO SOLID TRAF ST 5 IN, WHI                                 LF   45768.000        0.30   13859.01
0107  653-1502  THERMO SOLID TRAF ST, 5 IN, YEL                                LF   33089.000        0.28    9464.45
0108  653-1704  THERM SOLID TRAF STRIPE,24",WH                                 LF    2107.000        3.43    7243.93
0109  653-1804  THERM SOLID TRAF STRIPE, 8",WH                                 LF     731.000        1.96    1437.14
                                                Page 2
```

West Winder Bypass_Phase 1 (CES).txt

0110	653-3501	GLF	THERMO SKIP TRAF ST, 5 IN, WHI	22747.000	0.21	4837.60
0111	654-1001	EA	RAISED PVMT MARKERS TP 1	225.000	3.75	844.41
0112	654-1003	EA	RAISED PVMT MARKERS TP 3	670.000	3.17	2128.75
0113	655-7000	EA	PVMT ARROW, PREFORM, PLASTIC W/RAISE REFL	2.000	559.98	1119.96
0114	657-1085	LF	PRF PL SD PVT MKG,8",B/W,TP PB	4937.000	4.35	21487.35
0115	657-3085	GLF	PRF PL SK PVMT MKG,8",B/W,TPPB	809.000	3.42	2767.30
0116	657-6085	LF	PRF PL SD PVMT MKG,8",B/Y,TPPB	5324.000	4.30	22900.87
0117	668-2100	EA	DROP INLET, GP 1	5.000	1758.59	8792.96
0118	668-5000	EA	JUNCTION BOX	2.000	1687.22	3374.45
0119	682-6233	LF	CONDUIT, NONMETL, TP 3, 2 IN	473.000	5.16	2443.71
0120	682-7043	LF	MULTI-CELL COND SYS,4-WAY,FIBERGLASS	280.000	49.50	13860.00
0121	700-6910	AC	PERMANENT GRASSING	44.000	468.32	20606.26
0122	700-7000	TN	AGRICULTURAL LIME	44.000	53.16	2339.30
0123	700-7010	GL	LIQUID LIME	110.000	17.48	1922.93
0124	700-8000	TN	FERTILIZER MIXED GRADE	5.000	379.70	1898.52
0125	700-8100	LB	FERTILIZER NITROGEN CONTENT	2200.000	1.83	4027.76
0126	710-9000	SY	PERM SOIL REINFORCING MAT	2000.000	3.79	7583.08
0127	715-2100	SY	BITUM TRTD ROVING, SLOPES	2000.000	1.81	3622.72
0128	716-2000	SY	EROSION CONTROL MATS, SLOPES	40000.000	0.86	34475.20
0129	935-1512	LF	OUT PLNT FBR OPT CBL,DROP,SM,12 FBR	215.000	2.67	574.73
0130	935-3103	EA	FIBER OPTIC CLOSURE,UNDRGRD,24 FBR	4.000	749.35	2997.42
0131	935-4010	EA	FIBER OPTIC SPLICE, FUSION	14.000	69.56	973.85
0132	935-6561	EA	EXT TRNSCVR,DRP&RPT,1300NM,(SIGNALJOBS)	2.000	1588.92	3177.84
0133	935-8000	LS	TESTING	1.000	7976.12	7976.12
0134	938-1200	EA	PROGRAMMING MONITOR, TYPE A	1.000	362.03	362.03
0135	938-8500	LS	TRAINING	1.000	2143.00	2143.00

TOTAL ESTIMATED COST: 18813185.53

Date 2/22/2011

P.I. Number "0006327" County Barrow

Project Number CSSTP-0006-00(327) (Phase 1)

Special Provision, Section 109-Measurement and Payment

FUEL PRICE ADJUSTMENT (*ENGLISH 125% MAX*)

ENTER FPL DIESEL	2.877
ENTER FPM DIESEL	6.473

ENTER FPL UNLEADED	2.716
ENTER FPM UNLEADED	6.111

http://www.dot.ga.gov/doingbusiness/Materials/Pages/asphaltcementindex.aspx

INCREASE ADJUSTMENT
125.00%

INCREASE ADJUSTMENT
125.00%

ROADWAY ITEMS	QUANTITY	DIESEL FACTOR	GALLONS DIESEL	UNLEADED FACTOR	GALLONS UNLEADED	REMARKS
Excavations paid as specified by Sections 205 (CUBIC YARD)		0.29		0.15		
Excavations paid as specified by Sections 206 (CUBIC YARD)		0.29		0.15		
GAB paid as specified by the ton under Section 310 (TON)	95529.000	0.29	27703.41	0.24	22926.96	
Hot Mix Asphalt paid as specified by the ton under Sections 400 (TON)		2.90		0.71		
Hot Mix Asphalt paid as specified by the ton under Sections 402 (TON)	56589.000	2.90	164108.10	0.71	40178.19	
PCC Pavement paid as specified by the square yard under Section 430 (SY)		0.25		0.20		

BRIDGE ITEMS	Quantity	Unit Price	QF/1000	Diesel Factor	Gallons Diesel	Unleaded Factor	Gallons Unleaded	REMARKS
Bridge Excavation (CY) Section 211				8.00		1.50		
Class __Concrete (CY) Section 500	720.00	364.60	262.5120	8.00	2100.10	1.50	393.77	CLASS A
Class __Concrete (CY) Section 500				8.00		1.50		
Class __Concrete (CY) Section 500				8.00		1.50		
Superstru Con Class__(CY) Section 500				8.00		1.50		
Superstru Con Class__(CY) Section 500				8.00		1.50		
Superstru Con Class__(CY) Section 500				8.00		1.50		
Concrete Handrail (LF) Section 500				8.00		1.50		
Concrete Barrier (LF) Section 500				8.00		1.50		

BRIDGE ITEMS	Quantity	Unit Price	QF/1000	Diesel Factor	Gallons Diesel	Unleaded Factor	Gallons Unleaded	REMARKS
Stru Steel Plan Quantity (LB) Section 501				8.00		1.50		
Stru Steel Plan Quantity (LB) Section 501				8.00		1.50		
PSC Beams_____ (LF) Section 507				8.00		1.50		
PSC Beams_____ (LF) Section 507				8.00		1.50		
PSC Beams_____ (LF) Section 507				8.00		1.50		
Stru Reinf Plan Quantity(LB) Section 511				8.00		1.50		
Stru Reinf Plan Quantity(LB) Section 511				8.00		1.50		
Bar Reinf Steel (LB) Section 511	92810.00	0.60	55.5660	8.00	444.53	1.50	83.35	Culverts
Piling___inch (LF) Section 520				8.00		1.50		
Piling___inch (LF) Section 520				8.00		1.50		
Piling___inch (LF) Section 520				8.00		1.50		
Piling___inch (LF) Section 520				8.00		1.50		
Piling___inch (LF) Section 520				8.00		1.50		
Piling___inch (LF) Section 520				8.00		1.50		
Drilled Caisson,___ (LF) Section 524				8.00		1.50		
Drilled Caisson,___ (LF) Section 524				8.00		1.50		
Drilled Caisson,___ (LF) Section 524				8.00		1.50		
Pile Encasement,___(LF) Section 547				8.00		1.50		
Pile Encasement,___(LF) Section 547				8.00		1.50		

SUM QF DIESEL=	194366.13	SUM QF UNLEADED=	63582.27

DIESEL PRICE ADJUSTMENT($)	$643,036.99
UNLEADED PRICE ADJUSTMENT($)	$198,592.86

ASPHALT CEMENT PRICE ADJUSTMENT
(BITUMINOUS TACK COAT 125% MAX)

APPLICABLE TO CONTRACTS/PROJECTS CONTAINING THE 413 SPECIFICATION, SECTION 413.5.01 ADJUSTMENTS
ASPHALT PRICE ADJUSTMENT FOR BITUMINOUS TACK COAT

ENTER APL: 504 ENTER APM: 1134

125.00%	INCREASE ADJUSTMENT

L.I.N.	TYPE	TACK (GALLONS)	TACK (TONS)	REMARKS
413-1000	PG 58-22	2420	10.3941	
		TMT =	10.3941	

PRICE ADJUSTMENT($)	$6,286.38

400 / 402 ASPHALT CEMENT PRICE ADJUSTMENT 125% MAX

ENTER APL: 504 ENTER APM: 1134

http://www.dot.ga.gov/doingbusiness/Materials/Pages/asphaltcementindex.aspx

125.00%	INCREASE ADJUSTMENT

L.I.N. / Spec Number	MIX TYPE	HMA	JMF AC%	AC	REMARKS
402-3121	25 mm SP	29075	5.00	1453.75	
402-3130	12.5 mm SP	12460	5.00	623.00	
402-3190	19 mm SP	15054	5.00	752.70	
			5.00		
			5.00		
			5.00		
			5.00		
			5.00		
			5.00		
			5.00		
			5.00		
			5.00		
			5.00		
			5.00		
			5.00		
			5.00		
			5.00		
			TMT =	2829.45	

PRICE ADJUSTMENT($)	$1,711,251.36

ASPHALT CEMENT PRICE ADJUSTMENT FOR BITUMINOUS TACK COAT(Surface Treatment 125% MAX)

APPLICABLE TO CONTRACTS CONTAINING THE 413 SPEC. SECTION 413.5.01 ADJUSTMENTS ASPHALT PRICE ADJUSTMENT FOR BITUMINOUS TACK COAT

http://www.dot.ga.gov/doingbusiness/Materials/Pages/asphaltcementindex.aspx

ENTER APL [ ] ENTER APM [ ]

MISSING APL OR APM	MISSING APL OR APM

Use this side for Asphalt Emulsion Only		
L.I.N.	TYPE	ASPHALT EMULSION (GALLONS)

TMT = [ ]

REMARKS:

Use this side for Asphalt Cement Only		
L.I.N.	TYPE	TACK (GALLONS)

TMT = [ ]

REMARKS:

MONTHLY PRICE ADJUSTMENT($)	MISSING APL OR APM

ADJUSTMENT SUMMARY

FUEL PRICE ADJUSTMENT (*ENGLISH 125% MAX*)	
DIESEL PRICE ADJUSTMENT($)	$643,036.99
UNLEADED PRICE ADJUSTMENT($)	$198,592.85
ASPHALT CEMENT PRICE ADJUSTMENT (BITUMINOUS TACK COAT 125% MAX)	$6,286.38
400 / 402 ASPHALT CEMENT PRICE ADJUSTMENT 125% MAX	$1,711,251.36
ASPHALT CEMENT PRICE ADJUSTMENT FOR BITUMINOUS TACK COAT(Surface Treatment 125% MAX)	MISSING APL OR APM

REMARKS:

TOTAL ADJUSTMENTS	$2,559,167.58

DWN 10/08

Preliminary Right of Way Cost Estimate

Date: September 23, 2010
Project: CSSTP-0006-00 (327) — **P.I. Number: 0006327**
Existing/Required R/W: Varies / Varies — **No. Parcels 38**
Project Termini: SR 211 to Matthews School Road
Project Description: West Winder Bypass - Phase I

Fee Simple:								
Agricultural	539,243	sf	x	$ 0.50 /sf =	$	269,621		
Residential	204,744	sf	x	$ 1.50 /sf =	$	307,116		
Industrial	951,010	sf	x	$ 2.00 /sf =	$	1,902,020		
Commercial	135,103	sf	x	$ 3.00 /sf =	$	405,310		
							$	2,884,067
Permanent / Temporary Construction Easement:								
Agricultural	269,621	sf	x	$ 0.25 /sf =	$	67,405		
Residential	102,372	sf	x	$ 0.75 /sf =	$	76,779		
Industrial	475,505	sf	x	$ 1.00 /sf =	$	475,505		
Commercial	67,552	sf	x	$ 1.50 /sf =	$	101,327		
TOTAL							$	721,017
Improvements:								
5 Residential				=	$	600,000		
0 Commercial				=	$	0		
TOTAL							$	600,000
Relocation:								
5 Residential				=	$	250,000		
0 Commercial				=	$	0		
TOTAL							$	250,000
Damages:								
Proximity -	0	Parcels			$	0		
Consequential -	0	Parcels			$	0		
Cost to Cure -	2	Parcels			$	125,000		
TOTAL							$	125,000
SUB-TOTAL								$ 4,580,084

Net Cost		$	4,580,084
Scheduling Contingency	55%	$	2,519,046
Adm/Court Cost	60%	$	4,259,478
		$	11,358,608

Total Cost

$ 11,360,000

Prepared By:
Emory D. Dixon III, CG# 2403
Moreland Altobelli Associates, Inc.

Reviewed / Approved:
Howard P. Copeland
R/W Administrator

Note: Accuracy of estimate is the sole responsibility of the Preparer.
Note: The Market Appreciation (40%) is not included in this Preliminary Cost Estimate.

TOTAL COST SUMMARY - PHASE 2

Subtotal Construction Cost:	**$8,091,351.91**
Engineering and Inspection @ 5%:	$404,567.60
Fuel Adjustment:	$493,836.15
Liquid AC Adjustment:	$999,339.77
Total Construction Cost:	**$9,989,095.43**
Right of Way:	$6,180,000.00
Environmental Mitigation:	$149,900.00
Utility Total:	$1,714,671.00
PHASE 2 GRAND TOTAL COST	**$18,033,666.43**

Environmental Mitigation Summary - Phase 2

Description	Credits	Cost per Credit	Total
Ephemeral 4	0.24	$7,500	$1,800.00
Ephemeral 8	0.24	$7,500	$1,800.00
Stream 5	0	$70	$0.00
Stream 6	650	$70	$45,500.00
Stream 7	782.4	$70	$54,768.00
Stream 7a	657.6	$70	$46,032.00
		Phase 2 Total	**$149,900.00**

(See Jurisdictional Water Maps 1 & 2)

STATE HIGHWAY AGENCY

DATE : 05/02/2011

JOB ESTIMATE REPORT

JOB NUMBER : 0006327_PHASE 2 SPEC YEAR: 01
DESCRIPTION: WEST WINDER BYPASS_PHASE 2

ITEMS FOR JOB 0006327_PHASE 2

LINE	ITEM	ALT	UNITS	DESCRIPTION	QUANTITY	PRICE	AMOUNT
0001	150-1000		LS	TRAFFIC CONTROL - CSSTP-0006-00(327)	1.000	100000.00	100000.00
0002	153-1300		EA	FIELD ENGINEERS OFFICE TP 3	1.000	71159.68	71159.69
0003	163-0232		AC	TEMPORARY GRASSING	15.000	245.18	3677.78
0004	163-0240		TN	MULCH	435.000	168.40	73255.44
0005	163-0300		EA	CONSTRUCTION EXIT	6.000	1126.50	6759.05
0006	163-0501		EA	CONSTR AND REMOVE SILT CONTROL GATE,TP 1	6.000	738.59	4431.54
0007	163-0502		EA	CONSTR AND REMOVE SILT CONTROL GATE,TP 2	4.000	517.30	2069.21
0008	163-0503		EA	CONSTR AND REMOVE SILT CONTROL GATE,TP 3	36.000	369.42	13299.42
0009	163-0520		LF	CONSTR AND REMOVE TEMP PIPE SLOPE DRAIN	600.000	12.76	7660.97
0010	163-0528		LF	CONSTR AND REM FAB CK DAM -TP C SLT FN	300.000	3.69	1108.45
0011	163-0529		LF	CNST/REM TEMP SED BAR OR BLD STRW CK DM	4958.000	2.97	14748.51
0012	163-0531		EA	CONSTR & REM SEDIMENT BASIN,TP 1,STA NO-CSSTP-0006-00(327)	2.000	3201.79	6403.58
0013	163-0550		EA	CONS & REM INLET SEDIMENT TRAP	2.000	150.18	300.37
0014	165-0010		LF	MAINT OF TEMP SILT FENCE, TP A	9916.000	0.51	5089.09
0015	165-0030		LF	MAINT OF TEMP SILT FENCE, TP C	4958.000	0.85	4261.70
0016	165-0041		LF	MAINT OF CHECK DAMS - ALL TYPES	150.000	1.55	232.72
0017	165-0060		EA	MAINT OF TEMP SEDIMENT BASIN,STA NO -	2.000	582.15	1164.31
0018	165-0071		LF	MAINT OF SEDIMENT BARRIER - BALED STRAW	2479.000	0.82	2034.42
0019	165-0085		EA	MAINT OF SILT CONTROL GATE, TP 1	6.000	198.58	1191.48
0020	165-0086		EA	MAINT OF SILT CONTROL GATE, TP 2	4.000	198.34	793.38
0021	165-0087		EA	MAINT OF SILT CONTROL GATE, TP 3	36.000	112.25	4041.20
0022	165-0101		EA	MAINT OF CONST EXIT	6.000	499.61	2997.70
0023	165-0105		EA	MAINT OF INLET SEDIMENT TRAP	2.000	57.17	114.35
0024	167-1000		EA	WATER QUALITY MONITORING AND SAMPLING	2.000	690.00	1380.00
0025	167-1500		MO	WATER QUALITY INSPECTIONS	24.000	614.37	14744.98
0026	171-0010		LF	TEMPORARY SILT FENCE, TYPE A	19832.000	1.59	31655.64
0027	171-0030		LF	TEMPORARY SILT FENCE, TYPE C	9916.000	3.09	30683.08
0028	207-0203		CY	FOUND BKFILL MATL, TP II	364.000	43.12	15699.09
0029	210-0100		LS	GRADING COMPLETE - CSSTP-0006-00(327)	1.000	2840000.00	2840000.00
0030	310-1101		TN	GR AGGR BASE CRS, INCL MATL	55580.000	15.51	862555.47
0031	402-3121		TN	RECYL AC 25MM SP,GP1/2,BM&HL	16917.000	55.27	935086.67
0032	402-3130		TN	RECYL AC 12.5MM SP,GP2,BM&HL	7250.000	59.03	428011.51
0033	402-3190		TN	RECYL AC 19 MM SP,GP 1 OR 2 ,INC BM&HL	8759.000	57.20	501066.65
0034	413-1000		GL	BITUM TACK COAT	1408.000	2.27	3206.42
0035	432-0202		SY	MILL ASPH CONC PVMT/ 1/2" DEP	400.000	1.32	528.00
0036	433-1000		SY	REINF CONC APPROACH SLAB	1200.000	131.45	157750.02
0037	436-1000		LF	ASPH CONC CURB - CSSTP-0006-00(327)	6000.000	9.87	59273.16
0038	441-0016		SY	DRIVEWAY CONCRETE, 6 IN TK	2500.000	29.85	74644.63
0039	441-0204		SY	PLAIN CONC DITCH PAVING, 4 IN	280.000	34.26	9593.97
0040	441-0301		EA	CONC SPILLWAY, TP 1	12.000	1727.33	20728.00
0041	441-0600		CY	CONC HEADWALLS	17.000	989.71	16825.18
0042	441-6740		LF	CONC CURB & GUTTER/ 8"X30" TP7	48900.000	10.02	489992.67
0043	446-1100		LF	PVMT REF FAB STRIPS, TP2,18 INCH WIDTH(SKIP)	400.000	8.24	3299.60
0044	456-2015		GLM	INDENT. RUMB. STRIPS - GRND-IN-PL	1.000	915.56	915.57
0045	500-3101		CY	CLASS A CONCRETE CULVERT	300.000	467.49	140248.55
0046	500-3101		CY	CLASS A CONCRETE CULVERT @ WILLIAMSON CREEK	400.000	457.66	183065.22
0047	500-3101		CY	CLASS A CONCRETE	20.000	571.05	11421.00
0048	511-1000		LB	BAR REINF STEEL CULVERT @ WILLIAMSON CREEK	39690.000	0.85	33788.89

0049	511-1000	LB	BAR REINF STEEL CULVERT	52920.000	0.83	44274.46
0050	550-1180	LF	STM DR PIPE 18",H 1-10	200.000	34.37	6874.42
0051	550-1241	LF	STM DR PIPE 24",H 10-15	125.000	42.67	5334.44
0052	550-1303	LF	STM DR PIPE 30",H 20-25	150.000	57.80	8670.00
0053	550-1361	LF	STM DR PIPE 36",H 10-15	310.000	61.96	19209.90
0054	550-1421	LF	STM DR PIPE 42",H 10-15	75.000	85.72	6429.38
0055	550-1422	LF	STM DR PIPE 42",H 15-20	225.000	85.21	19172.69
0056	550-1481	LF	STM DR PIPE 48",H 10-15	50.000	98.76	4938.25
0057	550-1541	LF	STM DR PIPE 54",H 10-15	50.000	112.25	5612.77
0058	550-2180	LF	SIDE DR PIPE 18",H 1-10	200.000	26.80	5361.27
0059	550-2240	LF	SIDE DR PIPE 24",H 1-10	100.000	33.77	3377.41
0060	550-3318	EA	SAFETY END SECTION 18",STD,4:1	4.000	699.18	2796.76
0061	550-3324	EA	SAFETY END SECTION 24",STD,4:1	4.000	927.47	3709.91
0062	550-3518	EA	SAFETY END SECTION 18",STD,6:1	4.000	635.70	2542.81
0063	550-3524	EA	SAFETY END SECTION 24",STD,6:1	4.000	826.81	3307.26
0064	550-4118	EA	FLARED END SECT 18 IN, SIDE DR	8.000	405.81	3246.53
0065	550-4124	EA	FLARED END SECT 24 IN, SIDE DR	6.000	530.81	3184.89
0066	550-4230	EA	FLARED END SECT 30 IN, ST DR	4.000	786.90	3147.63
0067	550-4236	EA	FLARED END SECT 36 IN, ST DR	4.000	880.15	3520.61
0068	603-2024	SY	STN DUMPED RIP RAP, TP 1, 24"	400.000	43.98	17593.42
0069	603-2182	SY	STN DUMPED RIP RAP, TP 3, 24"	500.000	31.04	15524.80
0070	603-7000	SY	PLASTIC FILTER FABRIC	900.000	3.61	3257.87
0071	611-3100	EA	RECONSTR JCT BOX	1.000	1324.74	1324.74
0072	620-0100	LF	TEMP BARRIER, METHOD NO. 1	3000.000	24.26	72790.89
0073	634-1200	EA	RIGHT OF WAY MARKERS	150.000	88.68	13302.25
0074	636-1020	SF	HWY SGN,TP1MAT,REFL SH TP3	10.000	17.25	172.53
0075	636-1029	SF	HWY SGN,TP2 MATL,REFL SH TP 3	70.000	16.33	1143.13
0076	636-1031	SF	HWY SIGNS,TP1MTL,RFL SHTG,TP6	111.000	16.33	1812.68
0077	636-1032	SF	HWY SIGNS,TP2MATL,RFL SHTG,TP6	14.000	16.33	228.63
0078	636-1072	SF	HWY SIGNS,ALUM EXTRD PNLS, RS TP 3	392.000	34.36	13470.68
0079	636-2070	LF	GALV STEEL POSTS, TP 7	28.000	10.25	287.08
0080	636-2080	LF	GALV STEEL POSTS, TP 8	232.000	10.47	2430.39
0081	636-3000	LB	GALV STEEL STR SHAPE POST	2268.000	3.48	7910.67
0082	636-5010	EA	DELINEATOR, TP 1	14.000	57.39	803.55
0083	636-9094	LF	P-IN-PL,SIGNS,STL H,HP 12 X 53	14.000	66.42	929.90
0084	639-2002	LF	STEEL WIRE STRAND CABLE, 3/8"	538.000	3.47	1867.53
0085	639-4003	EA	STRAIN POLE, TP III	6.000	5598.45	33590.71
0086	639-4004	EA	STRAIN POLE, TP IV	9.000	5848.96	52640.65
0087	641-1100	LF	GUARDRAIL, TP T	300.000	49.10	14730.21
0088	641-1200	LF	GUARDRAIL, TP W	3000.000	15.84	47547.63
0089	641-5001	EA	GUARDRAIL ANCHORAGE, TP 1	15.000	635.84	9537.66
0090	641-5012	EA	GUARDRAIL ANCHORAGE, TP 12	15.000	1719.76	25796.47
0091	643-8200	LF	BARRIER FENCE (ORANGE), 4 FT	1000.000	2.02	2027.22
0092	647-1000	LS	TRAF SIGNAL INSTALLATION NO - CSSTP-0006-00(327) NO. 1	1.000	85000.00	85000.00
0093	647-1000	LS	TRAF SIGNAL INSTALLATION NO - CSSTP-0006-00(327) NO. 2	1.000	85000.00	85000.00
0094	647-1000	LS	TRAF SIGNAL INSTALLATION NO - CSSTP-0006-00(327) NO. 3	1.000	85000.00	85000.00
0095	647-2150	EA	PULL BOX, PB-5	3.000	1908.24	5724.75
0096	653-0110	EA	THERM PVMT MARK, ARROW, TP 1	2.000	68.56	137.13
0097	653-0120	EA	THERM PVMT MARK, ARROW, TP 2	23.000	70.53	1622.25
0098	653-0170	EA	THERM PVMT MARK, ARROW, TP 7	2.000	86.83	173.67
0099	653-0210	EA	THERM PVMT MARK, WORD , TP 1	3.000	103.55	310.67
0100	653-1501	LF	THERMO SOLID TRAF ST 5 IN, WHI	26698.000	0.33	8894.17
0101	653-1502	LF	THERMO SOLID TRAF ST, 5 IN YEL	21546.000	0.30	6644.14
0102	653-1704	LF	THERM SOLID TRAF STRIPE,24",WH	1372.000	3.53	4854.79
0103	653-1804	LF	THERM SOLID TRAF STRIPE, 8",WH	476.000	1.99	949.23
0104	653-3501	GLF	THERMO SKIP TRAF ST, 5 IN, WHI	14812.000	0.22	3365.29
0105	654-1001	EA	RAISED PVMT MARKERS TP 1	200.000	3.81	762.22
0106	654-1003	EA	RAISED PVMT MARKERS TP 3	436.000	3.27	1426.56
0107	655-7000	EA	PVMT ARROW, PREFORM PLASTIC W/RAISE REFL	2.000	559.98	1119.96
0108	657-1085	LF	PRF PL SD PVT MKG,8",B/W,TP PB	3214.000	4.55	14630.16
0109	657-3085	GLF	PRF PL SK PVMT MKG,8",B/W,TPPB	526.000	3.56	1876.52

West Winder Bypass_Phase 2 (CES).txt

0110	657-6085	LF	PRF PL SD PVMT MKG,8",B/Y,TPPB	3466.000	4.53	15705.49
0111	668-2100	EA	DROP INLET, GP 1	3.000	1758.59	5275.78
0112	668-5000	EA	JUNCTION BOX	2.000	1687.22	3374.45
0113	682-6233	LF	CONDUIT, NONMETL, TP 3, 2 IN	308.000	5.52	1703.09
0114	682-7043	LF	MULTI-CELL COND SYS,4-WAY,FIBERGLASS	182.000	49.50	9009.00
0115	700-6910	AC	PERMANENT GRASSING	30.000	475.97	14279.34
0116	700-7000	TN	AGRICULTURAL LIME	30.000	54.20	1626.19
0117	700-7010	GL	LIQUID LIME	75.000	17.86	1339.98
0118	700-8000	TN	FERTILIZER MIXED GRADE	3.000	390.88	1172.67
0119	700-8100	LB	FERTILIZER NITROGEN CONTENT	1500.000	1.88	2827.97
0120	710-9000	SY	PERM SOIL REINFORCING MAT	1000.000	3.95	3956.47
0121	715-2100	SY	BITUM TRTD ROVING, SLOPES	1000.000	1.81	1811.36
0122	716-2000	SY	EROSION CONTROL MATS, SLOPES	22000.000	0.89	19605.96
0123	935-1512	LF	OUT PLNT FBR OPT CBL,DROP,SM,12 FBR	140.000	3.15	441.89
0124	935-3103	EA	FIBER OPTIC CLOSURE,UNDRGRD,24 FBR	4.000	749.35	2997.42
0125	935-4010	EA	FIBER OPTIC SPLICE, FUSION	9.000	74.59	671.40
0126	935-6561	EA	EXT TRNSCVR,DRP&RPT,1300NM,(SIGNAL JOBS)	2.000	1588.92	3177.84
0127	938-1200	LS	TESTING	1.000	3988.06	3988.06
0128	938-8000	EA	PROGRAMMING MONITOR, TYPE A	1.000	362.03	362.03
0129	938-8500	LS	TRAINING	1.000	2143.00	2143.00

TOTAL ESTIMATED COST: 8091351.91

Date 2/22/2011

P.I. Number "0006327" County Barrow

Project Number CSSTP-0006-00(327) (Phase 2)

Special Provision, Section 109-Measurement and Payment

FUEL PRICE ADJUSTMENT (ENGLISH 125% MAX)

ENTER FPL DIESEL	2.877
ENTER FPM DIESEL	6.473

ENTER FPL UNLEADED	2.716
ENTER FPM UNLEADED	6.111

http://www.dot.ga.gov/doingbusiness/Materials/Pages/asphaltcementindex.aspx

INCREASE ADJUSTMENT
125.00%

INCREASE ADJUSTMENT
125.00%

ROADWAY ITEMS	QUANTITY	DIESEL FACTOR	GALLONS DIESEL	UNLEADED FACTOR	GALLONS UNLEADED	REMARKS
Excavations paid as specified by Sections 205 (CUBIC YARD)		0.29		0.15		
Excavations paid as specified by Sections 206 (CUBIC YARD)		0.29		0.15		
GAB paid as specified by the ton under Section 310 (TON)	55580.000	0.29	16118.20	0.24	13339.20	
Hot Mix Asphalt paid as specified by the ton under Sections 400 (TON)		2.90		0.71		
Hot Mix Asphalt paid as specified by the ton under Sections 402 (TON)	32926.000	2.90	95485.40	0.71	23377.46	
PCC Pavement paid as specified by the square yard under Section 430 (SY)		0.25		0.20		

BRIDGE ITEMS	Quantity	Unit Price	QF/1000	Diesel Factor	Gallons Diesel	Unleaded Factor	Gallons Unleaded	REMARKS
Bridge Excavation (CY) Section 211				8.00		1.50		
Class __Concrete (CY) Section 500	720.00	364.60	262.5120	8.00	2100.10	1.50	393.77	CLASS A
Class __Concrete (CY) Section 500				8.00		1.50		
Class __Concrete (CY) Section 500				8.00		1.50		
Superstru Con Class__(CY) Section 500				8.00		1.50		
Superstru Con Class__(CY) Section 500				8.00		1.50		
Superstru Con Class__(CY) Section 500				8.00		1.50		
Concrete Handrail (LF) Section 500				8.00		1.50		
Concrete Barrier (LF) Section 500				8.00		1.50		

BRIDGE ITEMS	Quantity	Unit Price	QF/1000	Diesel Factor	Gallons Diesel	Unleaded Factor	Gallons Unleaded	REMARKS
Stru Steel Plan Quantity (LB) Section 501				8.00		1.50		
Stru Steel Plan Quantity (LB) Section 501				8.00		1.50		
PSC Beams_____ (LF) Section 507				8.00		1.50		
PSC Beams_____ (LF) Section 507				8.00		1.50		
PSC Beams_____ (LF) Section 507				8.00		1.50		
Stru Reinf Plan Quantity(LB) Section 511				8.00		1.50		
Stru Reinf Plan Quantity(LB) Section 511				8.00		1.50		
Bar Reinf Steel (LB) Section 511	92610.00	0.60	56.5660	8.00	444.53	1.50	83.35	Culverts
Piling___inch (LF) Section 520				8.00		1.50		
Piling___inch (LF) Section 520				8.00		1.50		
Piling___inch (LF) Section 520				8.00		1.50		
Piling___inch (LF) Section 520				8.00		1.50		
Piling___inch (LF) Section 520				8.00		1.50		
Piling___inch (LF) Section 520				8.00		1.50		
Drilled Caisson,___ (LF) Section 524				8.00		1.50		
Drilled Caisson,___ (LF) Section 524				8.00		1.50		
Drilled Caisson,___ (LF) Section 524				8.00		1.50		
Pile Encasement,___(LF) Section 547				8.00		1.50		
Pile Encasement,___(LF) Section 547				8.00		1.50		

SUM QF DIESEL=	114148.22	SUM QF UNLEADED=	37193.78

DIESEL PRICE ADJUSTMENT($)	$377,665.11
UNLEADED PRICE ADJUSTMENT($)	$116,171.04

ASPHALT CEMENT PRICE ADJUSTMENT
(BITUMINOUS TACK COAT 125% MAX)

APPLICABLE TO CONTRACTS/PROJECTS CONTAINING THE 413 SPECIFICATION, SECTION 413.5.01 ADJUSTMENTS
ASPHALT PRICE ADJUSTMENT FOR BITUMINOUS TACK COAT

ENTER APL	504	ENTER APM	1134

125.00%	INCREASE ADJUSTMENT

L.I.N.	TYPE	TACK (GALLONS)	TACK (TONS)	REMARKS
413-1000	PG 58-22	1408	6.0475	

TMT = 6.0475

PRICE ADJUSTMENT($)	$3,657.53

400 / 402 ASPHALT CEMENT PRICE ADJUSTMENT 125% MAX

ENTER APL	504	ENTER APM	1134

http://www.dot.ga.gov/doingbusiness/Materials/Pages/asphaltcementindex.aspx

125.00%	INCREASE ADJUSTMENT

L.I.N. / Spec Number	MIX TYPE	HMA	JMF AC%	AC	REMARKS
402-3121	25 mm SP	16917	5.00	845.85	
402-3130	12.5 mm SP	7250	5.00	362.50	
402-3190	19 mm SP	8759	5.00	437.95	
			5.00		
			5.00		
			5.00		
			5.00		
			5.00		
			5.00		
			5.00		
			5.00		
			5.00		
			5.00		
			5.00		
			5.00		
			5.00		
			TMT =	1646.30	

PRICE ADJUSTMENT($)	$995,682.24

ASPHALT CEMENT PRICE ADJUSTMENT FOR BITUMINOUS TACK COAT(Surface Treatment 125% MAX)

APPLICABLE TO CONTRACTS CONTAINING THE 413 SPEC. SECTION 413.5.01 ADJUSTMENTS ASPHALT PRICE ADJUSTMENT FOR BITUMINOUS TACK COAT

http://www.dot.ga.gov/doingbusiness/Materials/Pages/asphaltcementindex.aspx

ENTER APL [ ] ENTER APM [ ]

MISSING APL OR APM	MISSING APL OR APM

Use this side for Asphalt Emulsion Only		
L.I.N.	TYPE	ASPHALT EMULSION (GALLONS)

TMT = [ ]

REMARKS: [ ]

Use this side for Asphalt Cement Only		
L.I.N.	TYPE	TACK (GALLONS)

TMT = [ ]

REMARKS: [ ]

MONTHLY PRICE ADJUSTMENT($)	MISSING APL OR APM

ADJUSTMENT SUMMARY

FUEL PRICE ADJUSTMENT (*ENGLISH 125% MAX*)	
DIESEL PRICE ADJUSTMENT($)	$377,665.11
UNLEADED PRICE ADJUSTMENT($)	$116,171.04
ASPHALT CEMENT PRICE ADJUSTMENT (BITUMINOUS TACK COAT 125% MAX)	$3,657.53
400 / 402 ASPHALT CEMENT PRICE ADJUSTMENT 125% MAX	$995,682.24
ASPHALT CEMENT PRICE ADJUSTMENT FOR BITUMINOUS TACK COAT(Surface Treatment 125% MAX)	MISSING APL OR APM

REMARKS:

TOTAL ADJUSTMENTS	$1,493,175.92

DWM 10/08

Preliminary Right of Way Cost Estimate

Date: September 23, 2010
Project: CSSTP-0006-00 (327) **P.I. Number: 0006327**
Existing/Required R/W: Varies / Varies **No. Parcels 40**
Project Termini: Matthews School Road to SR 316
Project Description: West Winder Bypass - Phase II

Fee Simple:								
Agricultural	0	sf	x	$	0.50 /sf =	$	0	
Residential	1,069,775	sf	x	$	1.00 /sf =	$	1,069,775	
Industrial	0	sf	x	$	2.00 /sf =	$	0	
Commercial	32,725	sf	x	$	3.00 /sf =	$	98,175	
							$	1,167,949
Permanent Construction Easement:								
Agricultural	0	sf	x	$	0.25 /sf =	$	0	
Residential	534,887	sf	x	$	0.50 /sf =	$	267,444	
Industrial	0	sf	x	$	1.00 /sf =	$	0	
Commercial	16,362	sf	x	$	1.50 /sf =	$	24,544	
TOTAL							$	291,987
Improvements:								
5 Residential					=	$	600,000	
1 Commercial					=	$	50,000	
TOTAL							$	650,000
Relocation:								
5 Residential					=	$	250,000	
1 Commercial					=	$	25,000	
TOTAL							$	275,000
Damages:								
Proximity -	1	Parcels				$	80,000	
Consequential -	1	Parcels				$	25,000	
Cost to Cure -	0	Parcels				$	0	
TOTAL							$	105,000
SUB-TOTAL								$ 2,489,936

Net Cost		$	2,489,936
Scheduling Contingency	55%	$	1,369,465
Adm/Court Cost	60%	$	2,315,641
		$	6,175,042

Total Cost $ 6,180,000

Prepared By: Emory D. Dixon III, CG# 2403
Moreland Altobelli Associates, Inc.

Reviewed / Approved: Howard P. Copeland
R/W Administrator

Note: Accuracy of estimate is the sole responsibility of the Preparer.
Note: The Market Appreciation (40%) is not included in this Preliminary Cost Estimate.

TOTAL COST SUMMARY - PHASE 3

Subtotal Construction Cost:	**$12,983,368.40**
Engineering and Inspection @ 5%:	$649,168.42
Fuel Adjustment:	$327,869.48
Liquid AC Adjustment:	$451,305.87
Total Construction Cost:	**$14,411,712.17**
Right of Way:	$14,820,000.00
Environmental Mitigation:	$14,700.00
Utility Total:	$2,939,436.00
PHASE 3 GRAND TOTAL COST	**$32,185,848.17**

Environmental Mitigation Summary - Phase 3

Descripion	Credits	Cost per Credit	Total
Ephemeral 1	0	$7,500	$0.00
Ephemeral 3	0	$7,500	$0.00
Stream 2	210	$70	$14,700.00
		Phase 3 Total	**$14,700.00**

Grand Total	**$488,930.00**

(See Jurisdictional Water Map 1 of 2)

STATE

HIGHWAY AGENCY
DATE : 05/02/2011
PAGE : 1

JOB ESTIMATE REPORT

JOB NUMBER : 0006327_PHASE 3 SPEC YEAR: 01
DESCRIPTION: WEST WINDER BYPASS_PHASE 3

ITEMS FOR JOB 0006327_PHASE 3

LINE	ITEM	ALT	UNITS	DESCRIPTION	QUANTITY	PRICE	AMOUNT
0001	001-0000		$	MISC ITEMS CONC. BRIDGE OVER SR 316	28783.000	100.00	2878300.00
0002	150-1000		LS	TRAFFIC CONTROL - CSSTP-0006-00(327)	1.000	350000.00	350000.00
0003	153-1300		EA	FIELD ENGINEERS OFFICE TP 3	1.000	71159.68	71159.69
0004	163-0232		AC	TEMPORARY GRASSING	15.000	245.18	3677.78
0005	163-0240		TN	MULCH	435.000	168.40	73255.44
0006	163-0300		EA	CONSTRUCTION EXIT	6.000	1126.50	6759.05
0007	163-0501		EA	CONSTR AND REMOVE SILT CONTROL GATE,TP 1	4.000	738.59	2954.36
0008	163-0502		EA	CONSTR AND REMOVE SILT CONTROL GATE,TP 2	4.000	517.30	2069.21
0009	163-0503		EA	CONSTR AND REMOVE SILT CONTROL GATE,TP 3	38.000	368.19	13991.48
0010	163-0520		LF	CONSTR AND REMOVE TEMP PIPE SLOPE DRAIN	2000.000	11.67	23348.56
0011	163-0528		LF	CONSTR AND REM FAB CK DAM -TP C SLT FN	300.000	3.69	1108.45
0012	163-0529		LF	CNST/REM TEMP SED BAR OR BLD STRW CK DM	7701.000	2.87	22170.33
0013	163-0531		EA	CONSTR & REM SEDIMENT BASIN,TP 1,STA NO-CSSTP-0006-00(327)	1.000	3201.79	3201.79
0014	163-0550		EA	CONS & REM INLET SEDIMENT TRAP	2.000	150.18	300.37
0015	165-0010		LF	MAINT OF TEMP SILT FENCE, TP A	15402.000	0.48	7417.60
0016	165-0030		LF	MAINT OF TEMP SILT FENCE, TP C	7701.000	0.80	6226.49
0017	165-0041		LF	MAINT OF CHECK DAMS - ALL TYPES	150.000	1.55	232.72
0018	165-0060		EA	MAINT OF TEMP SEDIMENT BASIN,STA NO -	1.000	747.16	747.16
0019	165-0071		LF	MAINT OF SEDIMENT BARRIER - BALED STRAW	3851.000	0.76	2939.31
0020	165-0085		EA	MAINT OF SILT CONTROL GATE, TP 1	4.000	198.58	794.32
0021	165-0086		EA	MAINT OF SILT CONTROL GATE, TP 2	4.000	198.34	793.38
0022	165-0087		EA	MAINT OF SILT CONTROL GATE, TP 3	38.000	111.44	4234.93
0023	165-0101		EA	MAINT OF CONST EXIT	6.000	499.61	2997.70
0024	165-0105		EA	MAINT OF INLET SEDIMENT TRAP	2.000	57.17	114.35
0025	167-1000		EA	WATER QUALITY MONITORING AND SAMPLING	2.000	690.00	1380.00
0026	167-1500		MO	WATER QUALITY INSPECTIONS	24.000	614.37	14744.98
0027	171-0010		LF	TEMPORARY SILT FENCE, TYPE A	30804.000	1.51	46763.55
0028	171-0030		LF	TEMPORARY SILT FENCE, TYPE C	15402.000	3.03	46686.39
0029	207-0203		CY	FOUND BKFILL MATL, TP II	377.000	43.01	16215.67
0030	210-0100		LS	GRADING COMPLETE - CSSTP-0006-00(327)	1.000	3270000.00	3270000.00
0031	310-1101		TN	GR AGGR BASE CRS, INCL MATL	22580.000	16.62	375502.46
0032	310-5120		SY	GR AGGR BS CRS 12IN INCL MATL	36000.000	29.43	1059542.64
0033	400-3624		TN	ASPH CONC 12.5 MM PEM,GP2,INCL P-MBM&HL	750.000	81.75	61314.50
0034	402-3121		TN	RECYL AC 25MM SP,GP1/2,BM&HL	6872.000	58.68	403254.18
0035	402-3130		TN	RECYL AC 12.5MM SP,GP2,BM&HL	2945.000	62.56	184262.58
0036	402-3190		TN	RECYL AC 19 MM SP,GP 1 OR 2 ,INC BM&HL	3558.000	60.81	216371.73
0037	402-3600		TN	RECY AC 12.5,SMA,GP2 ON,INCLP-,BM&HL	750.000	85.14	63855.00
0038	413-1000		GL	BITUM TACK COAT	572.000	2.48	1422.07
0039	430-0220		SY	PLN PC CONC PVMT/CL1C/ 12" TK	35689.000	37.70	1345475.30
0040	432-0202		SY	MILL ASPH CONC PVMT/ 1/2" DEP	400.000	1.32	528.00
0041	433-1000		SY	REINF CONC APPROACH SLAB	600.000	134.16	80498.92
0042	436-1000		LF	ASPH CONC CURB - CSSTP-0006-00(327)	8000.000	9.46	75721.44
0043	441-0016		SY	DRIVEWAY CONCRETE, 6 IN TK	725.000	31.98	23189.60
0044	441-0204		SY	PLAIN CONC DITCH PAVING, 4 IN	290.000	34.20	9919.75

West Winder Bypass_Phase 3 (CES).txt

0045	441-0301	EA	CONC SPILLWAY, TP 1	20.000	1727.33	34546.67			
0046	441-0600	CY	CONC HEADWALLS	18.000	989.71	17814.89			
0047	441-6740	LF	CONC CURB & GUTTER/ 8"X30" TP7	14181.000	10.49	148773.58			
0048	446-1100	LF	PVMT REF FAB STRIPS, TP2,18 INCH WIDTH	1800.000	5.75	10353.19			
0049	456-2015	GLM	INDENT. RUMB. STRIPS - GRND-IN-PL (SKIP)	7.000	915.56	6408.96			
0050	500-3101	CY	CLASS A CONCRETE	20.000	571.05	11421.00			
0051	550-1180	LF	STM DR PIPE 18",H 1-10	250.000	34.11	8528.69			
0052	550-1242	LF	STM DR PIPE 24",H 15-20	125.000	44.97	5621.72			
0053	550-1300	LF	STM DR PIPE 30",H 1-10	100.000	56.77	5677.08			
0054	550-1361	LF	STM DR PIPE 36",H 10-15	75.000	61.96	4647.56			
0055	550-1421	LF	STM DR PIPE 42",H 10-15	75.000	85.72	6429.38			
0056	550-1482	LF	STM DR PIPE 48",H 15-20	50.000	110.71	5535.96			
0057	550-1541	LF	STM DR PIPE 54",H 10-15	50.000	112.25	5612.77			
0058	550-2180	LF	SIDE DR PIPE 18",H 1-10	100.000	28.23	2823.88			
0059	550-2240	LF	SIDE DR PIPE 24",H 1-10	100.000	33.77	3377.41			
0060	550-3418	EA	SAFETY END SECTION 18",SD,4:1	4.000	494.17	1976.69			
0061	550-3424	EA	SAFETY END SECTION 24",SD,4:1	4.000	654.18	2616.75			
0062	550-3518	EA	SAFETY END SECTION 18",STD,6:1	4.000	635.70	2542.81			
0063	550-3524	EA	SAFETY END SECTION 24",STD,6:1	4.000	826.81	3307.26			
0064	550-4118	EA	FLARED END SECT 18 IN, SIDE DR	6.000	406.81	2440.92			
0065	550-4124	EA	FLARED END SECT 24 IN, SIDE DR	8.000	530.81	4246.52			
0066	550-4136	EA	FLARED END SECT 36 IN, SIDE DR	4.000	780.32	3121.28			
0067	550-4224	EA	FLARED END SECT 24 IN, ST DR	4.000	622.72	2490.89			
0068	550-4230	EA	FLARED END SECT 30 IN, ST DR	6.000	779.73	4678.42			
0069	550-4236	EA	FLARED END SECT 36 IN, ST DR	4.000	880.15	3520.61			
0070	550-4242	EA	FLARED END SECT 42 IN, ST DR	2.000	1513.03	3026.06			
0071	603-2024	SY	STN DUMPED RIP RAP, TP 1, 24"	400.000	43.98	17593.42			
0072	603-2182	SY	STN DUMPED RIP RAP, TP 3, 24"	500.000	31.04	15524.80			
0073	603-7000	SY	PLASTIC FILTER FABRIC	900.000	3.61	3257.87			
0074	611-3010	EA	RECONSTR DROP INLET, GROUP 1	2.000	1339.86	2679.73			
0075	611-3100	EA	RECONSTR JCT BOX	2.000	1324.74	2649.48			
0076	620-0100	LF	TEMP BARRIER, METHOD NO. 1	10000.000	22.27	222731.20			
0077	627-1000	SF	MSE WALL FACE, 0 - 10 FT HT, WALL NO-CSSTP-0006-00(327)	3870.000	42.29	163698.68			
0078	627-1010	SF	MSE WALL FACE, 10 - 20 FT HT, WALL NO-CSSTP-0006-00(327)	7740.000	43.04	333144.07			
0079	627-1020	SF	MSE WALL FACE, 20 - 30 FT HT, WALL NO-CSSTP-0006-00(327)	3870.000	44.77	173264.12			
0080	634-1200	EA	RIGHT OF WAY MARKERS	100.000	90.84	9084.93			
0081	636-1020	SF	HWY SGN,TP1MAT,REFL SH TP3	11.000	17.14	188.63			
0082	636-1029	SF	HWY SGN,TP2 MATL,REFL SH TP 3	73.000	16.30	1190.44			
0083	636-1031	SF	HWY SIGNS,TP1MTL,RFL SHTG,TP6	115.000	19.17	2204.55			
0084	636-1032	SF	HWY SIGNS,TP2MATL,RFL SHTG,TP6	15.000	19.17	287.55			
0085	636-1072	SF	HWY SIGNS,ALUM EXTRD PNLS, RS TP 3	406.000	34.23	13900.67			
0086	636-2070	LF	GALV STEEL POSTS, TP 7	29.000	10.22	296.38			
0087	636-2080	LF	GALV STEEL POSTS, TP 8	241.000	10.47	2524.25			
0088	636-3000	LB	GALV STEEL STR SHAPE POST	2349.000	3.48	8193.19			
0089	636-5010	EA	DELINEATOR, TP 1	15.000	56.64	849.60			
0090	636-9094	LF	P-IN-PL:SIGNS,STL H,HP 12 x 53	15.000	66.42	996.32			
0091	638-1003	LS	STR SUPPORT OVHD,SIGN,TPIIISTA CSSTP-0006-00(327)	1.000	3.46	225541.32			
0092	639-2002	LF	STEEL WIRE STRAND CABLE, 3/8"	557.000	1930.48	225541.32			
0093	639-4003	EA	STRAIN POLE, TP III	6.000	5598.45	33590.71			
0094	639-4004	EA	STRAIN POLE, TP IV	9.000	5848.96	52640.65			
0095	641-1100	LF	GUARDRAIL, TP T	1250.000	34.78	43475.96			
0096	641-1200	LF	GUARDRAIL, TP W	8000.000	14.56	116522.48			
0097	641-5001	EA	GUARDRAIL ANCHORAGE, TP 1	18.000	633.03	11394.69			
0098	641-5012	EA	GUARDRAIL ANCHORAGE, TP 12	18.000	1742.39	31363.09			
0099	643-1171	EA	CH LK FEN, ZC COAT, 8', 9 GA	600.000	24.17	14504.86			
0100	647-1000	LS	TRAF SIGNAL INSTALLATION NO - CSSTP-0006-00(327) NO.1	1.000	85000.00	85000.00			
0101	647-1000	LS	TRAF SIGNAL INSTALLATION NO - CSSTP-0006-00(327) NO.2	1.000	85000.00	85000.00			
0102	647-1000	LS	TRAF SIGNAL INSTALLATION NO - CSSTP-0006-00(327) NO.3	1.000	85000.00	85000.00			
0103	647-2150	EA	PULL BOX, PB-5	3.000	1908.24	5724.75			
0104	653-0110	LS	THERM PVMT MARK, ARROW, TP 1	5.000	67.80	339.00			
0105	653-0120	EA	THERM PVMT MARK, ARROW, TP 2	23.000	70.53	1622.25			

west Winder Bypass_Phase 3 (CES).txt

0106	653-0170	EA	THERM PVMT MARK, ARROW, TP 7	2.000	86.83	173.67
0107	653-0210	EA	THERM PVMT MARK, WORD, TP 1	4.000	103.55	414.22
0108	653-1501	LF	THERMO SOLID TRAF ST 5 IN, WHI	27652.000	0.33	9154.75
0109	653-1502	LF	THERMO SOLID TRAF ST, 5 IN YEL	22315.000	0.30	6839.10
0110	653-1704	LF	THERM SOLID TRAF STRIPE,24",WH	1421.000	3.53	5016.36
0111	653-1804	LF	THERM SOLID TRAF STRIPE, 8",WH	493.000	1.99	981.99
0112	653-3501	GLF	THERMO SKIP TRAF ST, 5 IN, WHI	15341.000	0.22	3466.61
0113	654-1001	EA	RAISED PVMT MARKERS TP 1	200.000	3.81	762.22
0114	654-1003	EA	RAISED PVMT MARKERS TP 3	451.000	3.26	1472.24
0115	655-7000	EA	PVMT ARROW, PREFORM PLASTIC W/RAISE REFL	2.000	559.98	1119.96
0116	657-1085	LF	PRF PL SD PVT MKG,8",B/W,TP P8	3329.000	4.53	15098.08
0117	657-3085	LF	PRF PL SK PVMT MKG,8",B/W,TPPB	546.000	3.55	1940.79
0118	657-6085	GLF	PRF PL SD PVMT MKG,8",B/Y,TPPB	3591.000	4.51	16202.13
0119	668-2100	EA	DROP INLET, GP 1	5.000	1758.59	8792.96
0120	668-5000	EA	JUNCTION BOX	3.000	1687.22	5061.67
0121	682-6233	LF	CONDUIT, NONMETL, TP 3, 2 IN	319.000	5.49	1754.14
0122	682-7043	LF	MULTI-CELL COND SYS,4-WAY,FIBERGLASS	189.000	49.50	9355.50
0123	700-6910	AC	PERMANENT GRASSING	30.000	475.97	14279.34
0124	700-7000	TN	AGRICULTURAL LIME	30.000	54.20	1626.19
0125	700-7010	GL	LIQUID LIME	75.000	17.86	1339.98
0126	700-8000	TN	FERTILIZER MIXED GRADE	3.000	390.88	1172.67
0127	700-8100	LB	FERTILIZER NITROGEN CONTENT	1500.000	1.88	2827.97
0128	710-9000	SY	PERM SOIL REINFORCING MAT	1000.000	3.95	3956.47
0129	715-2100	SY	BITUM TRTD ROVING, SLOPES	1000.000	1.81	1811.36
0130	935-1512	LF	OUT PLNT FBR OPT CBL,DROP,SM,12 FBR	145.000	3.11	451.50
0131	935-3103	EA	FIBER OPTIC CLOSURE,UNDRGRD,24 FBR	4.000	749.35	2997.42
0132	935-4010	EA	FIBER OPTIC SPLICE, FUSION	10.000	73.36	733.66
0133	935-6561	EA	EXT TRNSCVR,DRP&RPT,1300MM,(SIGNAL JOBS)	2.000	1588.92	3177.84
0134	935-8000	LS	TESTING	1.000	3988.06	3988.06
0135	938-1200	EA	PROGRAMMING MONITOR, TYPE A	1.000	362.03	362.03
0136	938-8500	LS	TRAINING	1.000	2143.00	2143.00

TOTAL ESTIMATED COST: 12983368.40

Date 2/22/2011

P.I. Number "0006327" County Barrow

Project Number CSSTP-0006-00(327) (Phase 3)

Special Provision, Section 109-Measurement and Payment

FUEL PRICE ADJUSTMENT *(ENGLISH 125% MAX)*

ENTER FPL DIESEL	2.877
ENTER FPM DIESEL	6.473

ENTER FPL UNLEADED	2.716
ENTER FPM UNLEADED	6.111

http://www.dot.ga.gov/doingbusiness/Materials/Pages/asphaltcementindex.aspx

INCREASE ADJUSTMENT
125.00%

INCREASE ADJUSTMENT
125.00%

ROADWAY ITEMS	QUANTITY	DIESEL FACTOR	GALLONS DIESEL	UNLEADED FACTOR	GALLONS UNLEADED	REMARKS
Excavations paid as specified by Sections 205 (CUBIC YARD)		0.29		0.15		
Excavations paid as specified by Sections 206 (CUBIC YARD)		0.29		0.15		
GAB paid as specified by the ton under Section 310 (TON)	58580.000	0.29	16988.20	0.24	14059.20	
Hot Mix Asphalt paid as specified by the ton under Sections 400 (TON)	750.000	2.90	2175.00	0.71	532.50	
Hot Mix Asphalt paid as specified by the ton under Sections 402 (TON)	14125.000	2.90	40962.50	0.71	10028.75	
PCC Pavement paid as specified by the square yard under Section 430 (SY)	35689.000	0.25	8922.25	0.20	7137.80	

BRIDGE ITEMS	Quantity	Unit Price	QF/1000	Diesel Factor	Gallons Diesel	Unleaded Factor	Gallons Unleaded	REMARKS
Bridge Excavation (CY) Section 211				8.00		1.50		
Class __Concrete (CY) Section 500	20.00	364.60	7.2920	8.00	58.34	1.50	10.94	CLASS A
Class __Concrete (CY) Section 500				8.00		1.50		
Class __Concrete (CY) Section 500				8.00		1.50		
Superstru Con Class__(CY) Section 500				8.00		1.50		
Superstru Con Class__(CY) Section 500				8.00		1.50		
Superstru Con Class__(CY) Section 500				8.00		1.50		
Concrete Handrail (LF) Section 500				8.00		1.50		
Concrete Barrier (LF) Section 500				8.00		1.50		

BRIDGE ITEMS	Quantity	Unit Price	QF/1000	Diesel Factor	Gallons Diesel	Unleaded Factor	Gallons Unleaded	REMARKS
Stru Steel Plan Quantity (LB) Section 501				8.00		1.50		
Stru Steel Plan Quantity (LB) Section 501				8.00		1.50		
PSC Beams_____ (LF) Section 507				8.00		1.50		
PSC Beams_____ (LF) Section 507				8.00		1.50		
PSC Beams_____ (LF) Section 507				8.00		1.50		
Stru Reinf Plan Quantity(LB) Section 511				8.00		1.50		
Stru Reinf Plan Quantity(LB) Section 511				8.00		1.50		
Bar Reinf Steel (LB) Section 511				8.00		1.50		Culverts
Piling___inch (LF) Section 520				8.00		1.50		
Piling___inch (LF) Section 520				8.00		1.50		
Piling___inch (LF) Section 520				8.00		1.50		
Piling___inch (LF) Section 520				8.00		1.50		
Piling___inch (LF) Section 520				8.00		1.50		
Piling___inch (LF) Section 520				8.00		1.50		
Drilled Caisson,___ (LF) Section 524				8.00		1.50		
Drilled Caisson,___ (LF) Section 524				8.00		1.50		
Drilled Caisson,___ (LF) Section 524				8.00		1.50		
Pile Encasement,___(LF) Section 547				8.00		1.50		
Pile Encasement,___(LF) Section 547				8.00		1.50		

SUM QF DIESEL=	69106.29	SUM QF UNLEADED=	31769.19

DIESEL PRICE ADJUSTMENT($)	$228,641.60
UNLEADED PRICE ADJUSTMENT($)	$99,227.88

ASPHALT CEMENT PRICE ADJUSTMENT
(BITUMINOUS TACK COAT 125% MAX)

APPLICABLE TO CONTRACTS/PROJECTS CONTAINING THE 413 SPECIFICATION, SECTION 413.5.01 ADJUSTMENTS
ASPHALT PRICE ADJUSTMENT FOR BITUMINOUS TACK COAT

ENTER APL: 504 ENTER APM: 1134

125.00%	INCREASE ADJUSTMENT

L.I.N.	TYPE	TACK (GALLONS)	TACK (TONS)	REMARKS
413-1000	PG 58-22	572	2.4568	

TMT = 2.4568

PRICE ADJUSTMENT($)	$1,486.87

400 / 402 ASPHALT CEMENT PRICE ADJUSTMENT 125% MAX

ENTER APL: 504 ENTER APM: 1134

http://www.dot.ga.gov/doingbusiness/Materials/Pages/asphaltcementindex.aspx

125.00%	INCREASE ADJUSTMENT

L.I.N. / Spec Number	MIX TYPE	HMA	JMF AC%	AC	REMARKS
402-3121	25 mm SP	6872	5.00	343.60	
402-3130	12.5 mm SP	2945	5.00	147.25	
402-3190	19 mm SP	3558	5.00	177.90	
400-3624	12.5 mm PEM	750	5.00	37.50	
402-3600	12.5 mm SMA	750	5.00	37.50	
			5.00		
			5.00		
			5.00		
			5.00		
			5.00		
			5.00		
			5.00		
			5.00		
			5.00		
			5.00		
			TMT =	743.75	

PRICE ADJUSTMENT($)	$449,820.00

ASPHALT CEMENT PRICE ADJUSTMENT FOR BITUMINOUS TACK COAT(Surface Treatment 125% MAX)

APPLICABLE TO CONTRACTS CONTAINING THE 413 SPEC. SECTION 413.5.01 ADJUSTMENTS ASPHALT PRICE ADJUSTMENT FOR BITUMINOUS TACK COAT

http://www.dot.ga.gov/doingbusiness/Materials/Pages/asphaltcementindex.aspx

ENTER APL | ENTER APM

MISSING APL OR APM | MISSING APL OR APM

Use this side for Asphalt Emulsion Only		
L.I.N.	TYPE	ASPHALT EMULSION (GALLONS)

TMT =

REMARKS:

Use this side for Asphalt Cement Only		
L.I.N.	TYPE	TACK (GALLONS)

TMT =

REMARKS:

MONTHLY PRICE ADJUSTMENT($) | MISSING APL OR APM

ADJUSTMENT SUMMARY

FUEL PRICE ADJUSTMENT (*ENGLISH 125% MAX*)	
DIESEL PRICE ADJUSTMENT($)	$228,641.60
UNLEADED PRICE ADJUSTMENT($)	$99,227.88
ASPHALT CEMENT PRICE ADJUSTMENT (BITUMINOUS TACK COAT 125% MAX)	$1,485.87
400 / 402 ASPHALT CEMENT PRICE ADJUSTMENT 125% MAX	$449,820.00
ASPHALT CEMENT PRICE ADJUSTMENT FOR BITUMINOUS TACK COAT(Surface Treatment 125% MAX)	MISSING APL OR APM

REMARKS:

TOTAL ADJUSTMENTS | **$779,175.36**

DWM 10/08

Preliminary Right of Way Cost Estimate

Date: September 23, 2010
Project: CSSTP-0006-00 (327) — P.I. Number: 0006327
Existing/Required R/W: Varies / Varies — No. Parcels 10
Project Termini: SR 316 Interchange at Patrick Mill Road
Project Description: West Winder Bypass - Phase III

Fee Simple:								
Agricultural	0	sf	x	$	1.00 /sf =	$	0	
Residential	747,115	sf	x	$	1.50 /sf =	$	1,120,672	
Industrial	809,767	sf	x	$	2.00 /sf =	$	1,619,533	
Commercial	492,760	sf	x	$	3.00 /sf =	$	1,478,279	
								$ 4,218,485
Permanent / Temporary Construction Easement:								
Agricultural	0	sf	x	$	0.50 /sf =	$	0	
Residential	373,557	sf	x	$	0.75 /sf =	$	280,168	
Industrial	404,883	sf	x	$	1.00 /sf =	$	404,883	
Commercial	246,380	sf	x	$	1.50 /sf =	$	369,428	
TOTAL								$ 1,054,479
Improvements:								
1 Residential					=	$	150,000	
0 Commercial					=	$	0	
TOTAL								$ 150,000
Relocation:								
0 Residential					=	$	50,000	
0 Commercial					=	$	0	
TOTAL								$ 50,000
Damages:								
Proximity -	0	Parcels				$	0	
Consequential -	1	Parcels				$	500,000	
Cost to Cure -	0	Parcels				$	0	
TOTAL								$ 500,000
SUB-TOTAL								$ 5,972,964

Net Cost		$	5,972,964
Scheduling Contingency	55%	$	3,285,130
Adm/Court Cost	60%	$	5,554,856
		$	14,812,950

Total Cost $ 14,820,000

Prepared By: Emory D. Dixon III, CCII 2403
Moreland Altobelli Associates, Inc.

Reviewed / Approved: Howard P. Copeland
R/W Administrator

Note: Accuracy of estimate is the sole responsibility of the Preparer.
Note: The Market Appreciation (40%) is not included in this Preliminary Cost Estimate.

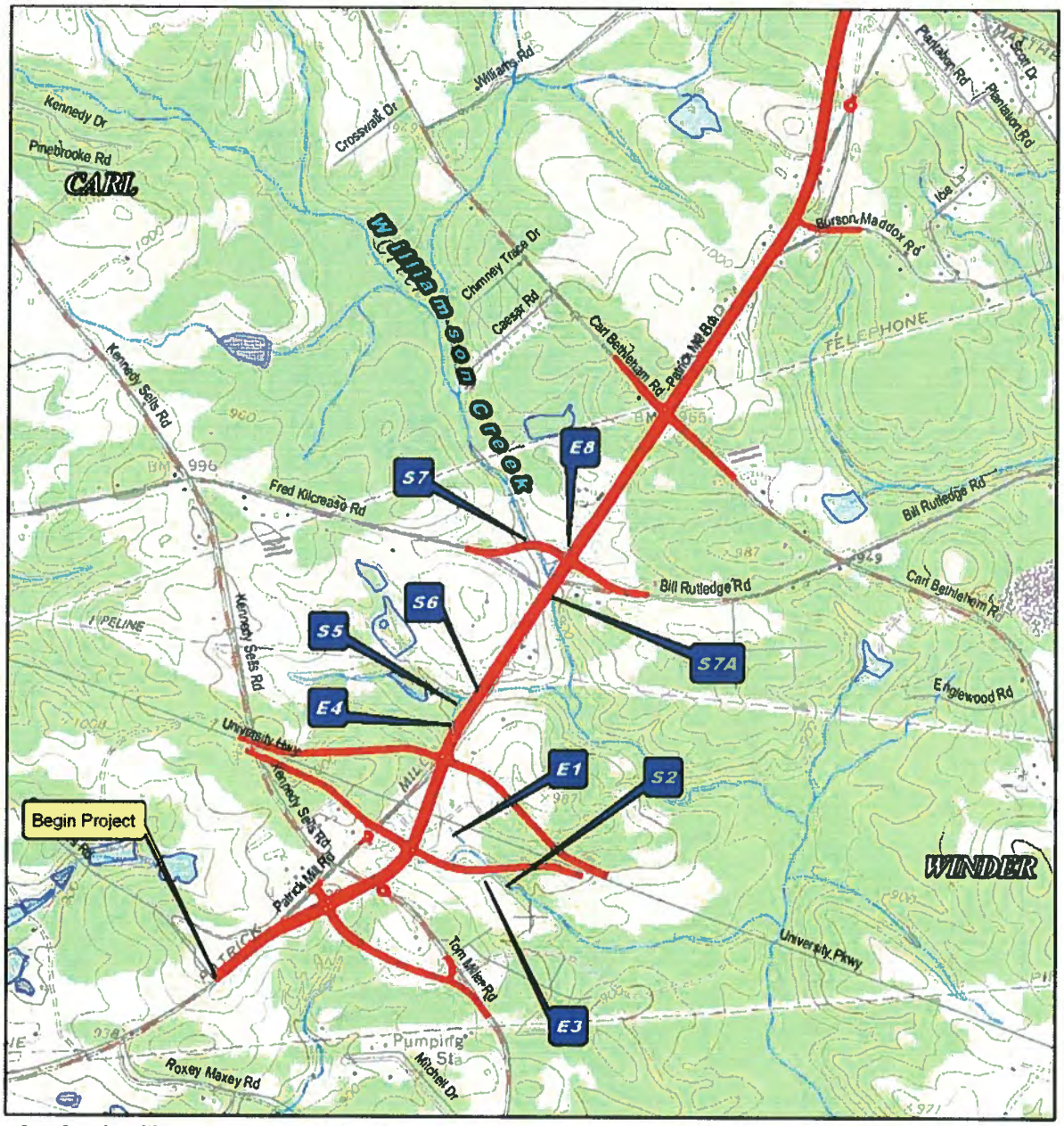

Source: Barrow County GIS USGS TOPO QUADS - WINDER NORTH & BOLD SPRINGS 10-27-09

Jurisdictional Waters Map
1 of 2

0 1,500 3,000 Feet

CSSTP-0006-00(327)
PI# 0006327
West Winder Bypass
Barrow County, Georgia

N

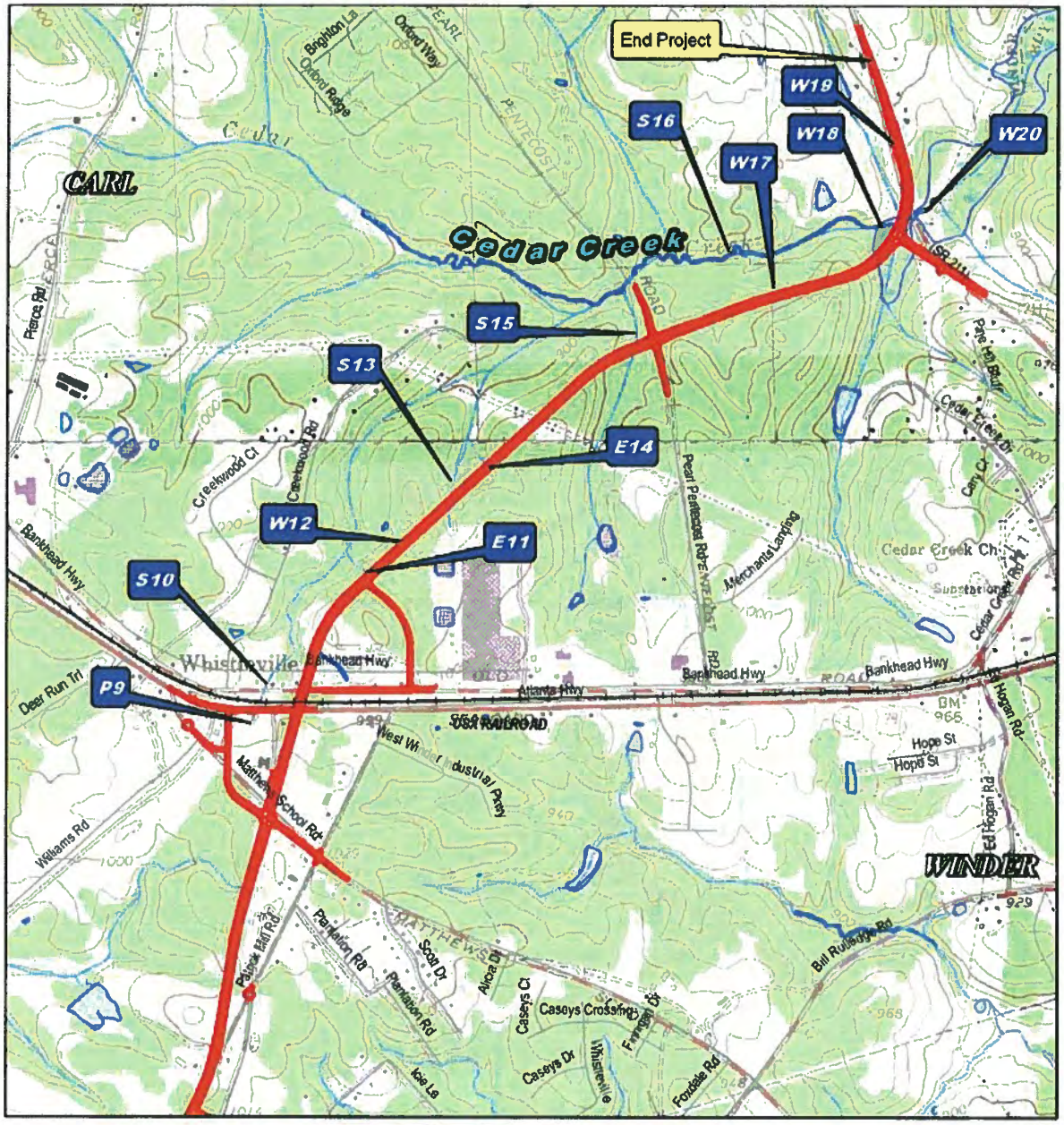

Jurisdictional Waters Map
2 of 2

0 1,500 3,000 Feet

CSSTP-0006-00(327)
PI# 0006327
West Winder Bypass
Barrow County, Georgia

N

UTILITY COST ESTIMATE WINDER BY-PASS BARROW COUNTY
February 25, 2011

CSX railroad New Highway Bridge	$151,000.00
Colonial Pipeline	$2,000,000.00
Georgia Power Transmission (six structures)	$1,200,000.00
Georgia Power Distribution (Est. 3.5 mi of poles)	$1,484,000.00
Jackson EMC (Unknown amount of facilities)	$150,000.00
Comcast CATV (They have no prior rights)	$0
Telephone facilities (we have never paid a phone company to relocate)	$0
City of Winder Gas (Unknown Quantity - Est. 2 mi 4inch STL @60/ft)	$633,600.00
Water Utility (3.5 mi of new const @ $485,000/mi)	$1,697,500.00
Sewer	$1,000,000.00
Total	$8,316,100.00

DEPARTMENT OF TRANSPORTATION
STATE OF GEORGIA

INTERDEPARTMENT CORRESPONDENCE

FILE: CSSTP-0006-00(327) Barrow
P.I. No.: 0006327
West Winder Bypass - 3 phases

OFFICE: Engineering Services

DATE: July 16, 2010

FROM: Ronald E. Wishon, State Project Review Engineer REW

TO: Bobby K. Hilliard, PE, State Program Delivery Engineer
Attn.: Douglas Fadool

SUBJECT: IMPLEMENTATION OF VALUE ENGINEERING STUDY ALTERNATIVES

The VE Study for the above project was held April 19-22, 2010. Responses were received on July 15, 2010. Recommendations for implementation of Value Engineering Study Alternatives are indicated in the table below. The Project Manager shall incorporate the VE alternatives recommended for implementation to the extent reasonable in the design of the project.

ALT #	Description	Potential Savings/LCC	Implement	Comments
1	Modify realignment north of Fred Kilcrease Road to line up with a slight realignment of Bill Rutledge Road to the north	$298,000	No	The originally proposed design includes the desirable angle of intersection (90°). By changing the intersection to 70° as recommended by the VE Team, individual stream impacts will increase.
2	Realign the bridge over Bankhead Highway, CSX RR and SR 8 closer to a 90° skew	$438,000	Yes	This will be done.
6	Remove the cul-de-sac on Patrick Mill Road and create a right-in right-out intersection with the West Winder Bypass	Design Suggestion	No	This recommendation would add an undesirable point of access to the West Winder Bypass and increase the construction costs.
7	Move the cul-de-sac on Patrick Mill Road 500 ft south to provide access to the historic property	Design Suggestion	No	The cost savings of eliminating the demolition of 500 ft of pavement is negligible. If left undisturbed, this section of pavement would serve no practical use and would be an unnecessary maintenance issue. The historic property already has access to the retained portion of the pavement.

9	Modify the realignment of Tom Miller Road and Fair Long Way	$646,000	No	This recommendation reduces the distance between signalized intersections from 1,150 feet to 800 feet. Acquiring the access rights from the ramps to the new median opening for Tom Miller Road/Fair Long Way as proposed by the VE Team would reduce the potential VE savings.
12	Reduce the length of the ramps to and from SR 316 and the West Winder Bypass	$2,188,000	Yes	This will be done.
13	Use 11 ft wide inside lanes in lieu of 12 ft wide lanes	$509,000	Yes	This will be done.
14	Move the Burson Maddox Road intersection 300 ft south of the original design intersection with West Winder Bypass	$344,000	Yes	This will be done.
15	Revise the alignment of Matthews School Road to connect to SR 8 close to the existing intersection	$14,000	Yes, partially	To avoid additional ROW and construction costs, the "right in" portion of the VE recommendation will be eliminated, and the right turn movements will utilize the newly proposed intersection.
16	Reduce the concrete paved shoulder widths on the ramps to and from SR 316 and the new West Winder bypass	$310,000	Yes	This will be done.
17	Reduce the width of the median from 24 ft to 20 ft	$935,000	Yes	This will be done. A width of 24 ft will be provided at intersections to offset left turn lanes.
18	Use 4 ft wide outside paved shoulders in lieu of 6.5 ft wide outside paved shoulders	$418,000	Yes	This will be done.

19	Use vertical bridge abutments in lieu of slope paving	$1,219,000	No	The Office of Bridge Design indicates there would be a cost increase with the implementation of this alternative. There are also increased maintenance costs with MSE walls, and future expansion is limited. Due to the sequence of construction and coordination with subcontractors and equipment, bridge and wall costs are higher than the general bridge and wall costs for separate structures.
24	Use a partial cloverleaf interchange for the West Winder Bypass and SR 316 connection in lieu of a diamond interchange	$6,180,000	No	The proposed partial cloverleaf would have weaving operational issues between the two loop ramps.
25	Remove the middle pier on the bridge over Bankhead Highway, CSX RR and SR 8	$160,000	No	There is not sufficient information to determine which option is most efficient. Once the survey has been completed and the structure type and length are determined, the most economical span arrangements will be developed.
26	Use 10 ft wide shoulders on bridges in lieu of 12 ft wide shoulders	$323,000	Yes	This will be done.
28	Reduce the length of the bridge over Bankhead Highway, CSX RR and SR 8	$241,000	No	Recommendation No. 2 provides greater cost savings.
33	Use 4:1 slopes where 6:1 slopes are being used to save ROW acquisition	$1,718,000	Yes	This will be done.
34	Eliminate the traffic signal at the intersection of Bill Rutledge Road and Fred Kilcrease Road	$127,000	No	A traffic signal warrant analysis was performed and it shows the need for a signal based upon the build year traffic volumes.
35	Reduce turn lane storage lengths at the intersection of Carl Bethlehem Road and the West Winder Bypass	Proposed = $171,000 Actual = $130,000	Yes, partially	The reductions will apply to six of the eight storage bays. Based on analysis of traffic counts, all but the NB left turn lane on West Winder Bypass and the EB right turn lane on Carl Bethlehem Road will be shortened. This will result in a revised savings of $130,000.

The Office of Engineering Services concurs with the Project Manager's responses.

Approved: _____ **Date:** 7/16/10
Gerald M. Ross, PE, Chief Engineer

REW/LLM
Attachments
c: Ben Buchan
Bobby Hilliard/Michael Haithcock/Douglas Fadool
Paul Liles/Bill Duvall/Bill Ingalsbe
Larry Bowman
Randall Davis
Ken Werho
Lisa Myers
Matt Sanders

DEPARTMENT OF TRANSPORTATION
STATE OF GEORGIA

INTERDEPARTMENT CORRESPONDENCE

FILE: CSSTP-0006-00(327) Barrow County
P.I. No.: 0006327
West Winder Bypass

OFFICE: Program Delivery

DATE: July 15, 2010

FROM: Bobby K. Hilliard, PE, State Program Delivery Engineer BH

TO: Ronald E. Wishon, State Project Review Engineer
Attn.: Lisa Myers

SUBJECT: **RESPONSE TO VALUE ENGINEERING STUDY ALTERNATIVES**

Attached are the responses for the referenced Value Engineering Study. This office concurs with the responses.

If you have any questions, please contact Douglas Fadool, AVS, Project Manager at 404-308-1353.

MH

BKH:MAH:DF:sha
c: Ben Buchan

MorelandAltobelliAssociates,Inc

2211 Beaver Ruin Road, Suite 190 • Norcross, Georgia 30071 • 770/263-5945 • Fax: 770/263-0166 • ma@maai.net

Thomas D. Moreland, PE, President
Buddy Gratton, PE, Executive Vice President
George M. Byrd, PE, Senior Vice President
Vickie E. Moreland, Senior Vice President
J. Holly Moreland, Vice President
Henry E. Collins, Jr., Vice President
Richard C. Boullain, PE, Vice President
Bradley M. Hale, PE, Vice President
Albert J. Joyner Jr., Vice President

Value Engineering Responses

CSSTP-0006-00(327)
PI No. 0006327
Barrow County

1) **Alt. No. 1: Modify realignment of Fred Kilcrease Road to line up with a slight realignment of Bill Rutledge Road to the North.**
VE Team Savings = $298,000

No, will not implement. The proposed design includes the desirable angle for intersections, which is 90 degrees. By changing the intersection angle to 70 degrees, individual stream impacts will likely be greater and the skew is not desirable. The proposed truck percentage on the West Winder Bypass is 22%. The proposed VE savings will likely be reduced.

2) **Alt. No. 2: Realign West Winder Bypass bridge over Bankhead Highway, the CSX Railroad and SR 8 closer to a 90 degree skew.**
VE Team Savings = $438,000

Yes, will implement.

3) **Alt. No. 6: Remove cul-de-sac on exiting Patrick Mill Road and create a right-in/right-out connection to the West Winder Bypass.**
VE Team Savings = N/A

No, will not implement. This recommendation will slightly add to the overall construction cost and will add an undesirable point of access to the West Winder Bypass.

4) **Alt. No. 7: Move cul-de-sac on Patrick Mill Road South to provide access to the historic property.**
VE Team Savings = N/A

No, will not implement. The cost savings of preventing the demolition of 500 feet of pavement is negligible and could be offset in the event that the contractor would be able

to use this space as a paved staging area. The historic property already has access to the retained portion of the pavement. If left undisturbed, this section of pavement would serve no practical use and would simply be an additional unnecessary maintenance issue.

5) **Alt. No. 9 Modify the alignment of Tom Miller Road and Fair Long Way.**
VE Team Savings = $646,000

No, will not implement. The proposed VE recommendation reduces the distance between signalized intersections from 1,150 feet to 800 feet. As stated in the VE report, "it is recommended that limit of access rights be acquired from the ramps to the new median opening for Tom Miller Road/Fair Long Way because the desirable distance for the first median opening from the ramps is 1,000 feet". Reducing the intersection distance to less than 1000 feet between signalized intersections is highly undesirable and the recommendation to buy the limited access right for corner properties next to SR 316 will be costly and potentially litigious. The proposed VE savings will likely be reduced after taking into account the purchase of access rights.

6) **Alt. No. 12: Shorten the ramps to and from SR 316 to the new West Winder Bypass.**
VE Team Savings = $2,188,000

Yes, will implement.

7) **Alt. No. 13: Use an 11-ft. wide inside lane in lieu of a 12-ft.-wide lane.**
VE Team Savings = $509,000

Yes, will implement.

8) **Alt. No. 14: Move Burson Maddox Road 300 ft. South of as-designed intersection with the Bypass.**
VE Team Savings = $344,000

Yes, will implement.

9) **Alt. No. 15: Connect Mathews School Road directly to SR 8 close to the existing connection to SR 8.**
VE Team Savings = $14,000

Yes, partial implement. To avoid additional right of way and construction cost, the design team proposes to eliminate the "right in" portion of the recommendation and bring the right turn movement to the new proposed intersection resulting in a more conventional, less costly design.

10) **Alt. No. 16: Narrow the paved concrete shoulders on the ramps to and from SR 316 and the new West Winder Bypass.**
VE Team Savings = $310,000

Yes, will implement.

11) **Alt. No. 17: Narrow the median from 24-ft.-wide to 20-ft.-wide.**
VE Team Savings = $935,000

Yes, will implement. Will provide 24 feet at intersections to offset left turns.

12) **Alt. No. 18: Use 4-ft.-wide paved outside shoulders in lieu of 6.5-ft.-wide paved outside shoulders.**
VE Team Savings = $418,000

Yes, will implement.

13) **Alt. No. 19: Use vertical bridge abutments in lieu of ends with sloped paving.**
VE Team Savings = $1,219,000

No, will not implement. See attached memo dated 7-12-10 from Mr. Paul V. Liles.

14) **Alt. No. 24: Use a partial cloverleaf in lieu of a diamond interchange.**
VE Team Savings= $ 6,180,000

No, Will not implement. See Alt. No. 12. In addition, the design team prefers to maintain the diamond interchange since other nearby grade separations along SR 316 that under design are being proposed as diamond interchanges. The proposed partial cloverleaf would have weaving operational issues between the two loop ramps over the bridge in the am and pm peak hours, at a minimum. Also, there are ROW savings that

can be realized by moving the diamond ramps in tighter while maintaining the proposed signal spacing.

15) **Alt. No. 25: Delete the center pier for the West Winder Bypass bridge over Bankhead Highway, CSX Railroad and SR 8.**
VE Team Savings = $160,000

No, will not implement. See attached memo dated 7-12-10 from Mr. Paul V. Liles.

16) **Alt. No. 26: Use 10-ft.-wide shoulders on the bridge to match the roadway shoulders in lieu of 12-ft.-wide shoulders.**
VE Team Savings = $ 322,000

Yes, will implement the 10 ft. shoulder, truck percentage is 22%..

17) **Alt. No. 28: Shorten the West Winder Bridge over Bankhead Highway, CSX Railroad and SR 8 by 22 ft. 6 in.**
VE Team Savings = $ 241,000

N/A, will not implement. See Alt. No. 2. The implementation of Alt. No. 2 produces a greater cost savings.

18) **Alt. No. 33: Use 4:1 slopes in lieu of 6:1 slopes at the end of the shoulders and reduce the width of the right-of-way.**
VE Team Savings = $ 1,718,000

Yes, will implement.

19) **Alt. No. 34: Eliminate the traffic signal at the intersection of Bill Rutledge Road and Fred Kilcrease Road and the West Winder Bypass.**
VE Team Savings = $127,000

No, will not implement. A traffic signal warrant analysis was performed (see attached) that shows the need for a signal based upon the "build year" traffic volumes. The analysis includes 100% volume threshold and right turn reduction procedures (NCHRP 457).

20) **Alt. No. 35: Reduce turn lane storage lengths at the intersection of Carl Bethlehem Road and the West Winder Bypass.**
VE Team Savings = $171,000

Yes, will partially implement this proposal. The reductions will apply to six of the eight turn lane storage bays. The reductions are based on analysis of the traffic counts and apply to all but the northbound left turn lane on West Winder Bypass and the eastbound right turn lane on Carl Bethlehem Road. As a result of partial implementation, the realized VE Team Savings would be approximately $130,000.

Traffic Signal Warrant Analysis

West Winder Bypass at Bill Rutledge Rd
and Fred Kilcrease Rd

Signal Warrants - Summary

Major Street Approaches

Northbound: **West Winder Bypass**
Number of Lanes: **2**
Approach Speed: **45**
Total Approach Volume: **10,254**

Southbound: **West Winder Bypass**
Number of Lanes: **2**
Approach Speed: **45**
Total Approach Volume: **9,723**

Minor Street Approaches

Eastbound: **Fred Kilcrease Rd**
Number of Lanes: **2**
Total Approach Volume: **2,184**

Westbound: **Bill Rutledge Rd**
Number of Lanes: **2**
Total Approach Volume: **1,953**

Warrant Summary (Urban values apply.)

Warrant 1 - Eight Hour Vehicular Volumes ..... **Satisfied**

Warrant 1A - Minimum Vehicular Volume .....Not Satisfied
Required volumes reached for 2 hours, 8 are needed

Warrant 1B - Interruption of Continuous Traffic .....Satisfied
Required volumes reached for 13 hours, 8 are needed

Warrant 1 A&B - Combination of Warrants .....Not Satisfied
Required volumes reached for 3 hours, 8 are needed

Warrant 2 - Four Hour Volumes ..... **Satisfied**
Number of hours (7) volumes exceed minimum >= minimum required (4).

Warrant 3 - Peak Hour ..... Not Evaluated

Warrant 3A - Peak Hour Delay .....Not Evaluated

Warrant 3B - Peak Hour Volumes .....Not Evaluated

Warrant 4 - Pedestrian Volumes ..... Not Evaluated

Warrant 5 - School Crossing ..... Not Evaluated

Warrant 6 - Coordinated Signal System ..... Not Evaluated

Warrant 7 - Crash Experience ..... Not Evaluated

Warrant 8 - Roadway Network ..... Not Evaluated

Traffic Signal Warrant Analysis

West Winder Bypass at Bill Rutledge Rd
and Fred Kilcrease Rd

Signal Warrants - Summary

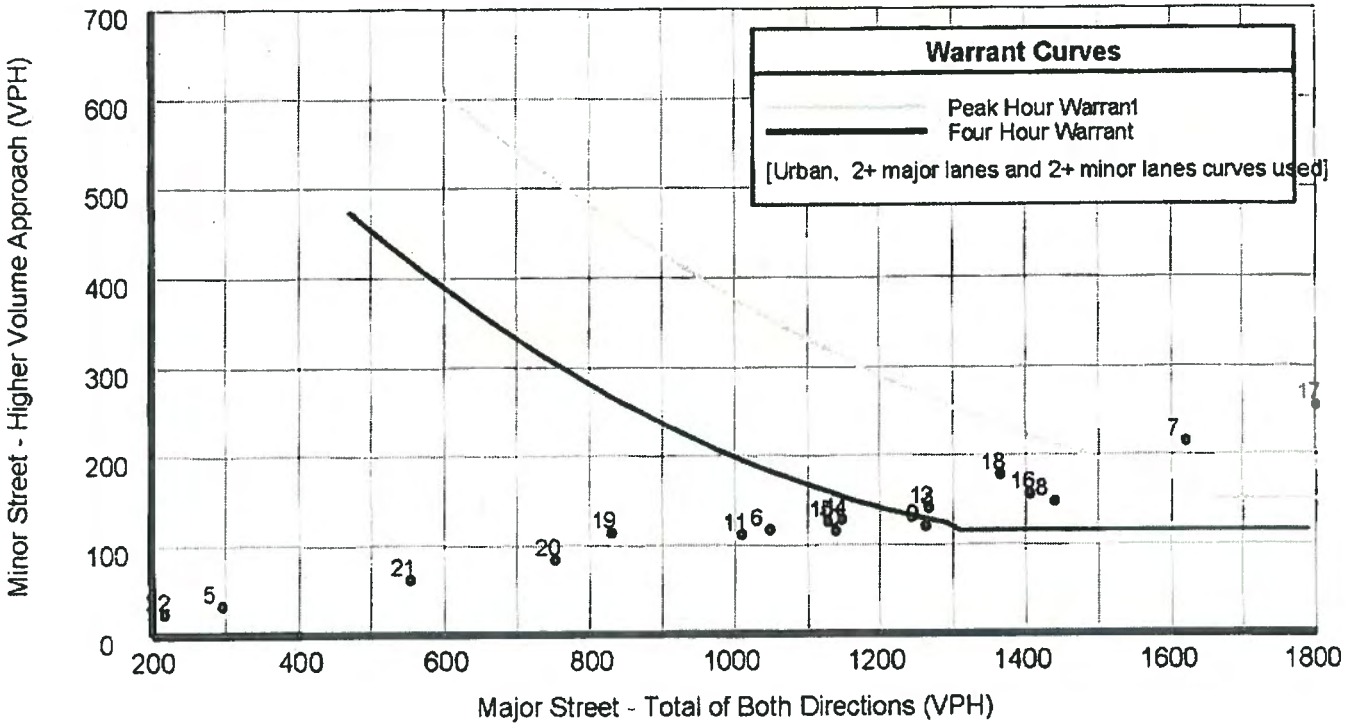

Analysis of 8-Hour Volume Warrants:

Hour	Major	Higher Minor		War-1A			War-1B			War-1A&B		
Begin	Total	Vol	Dir	Major Crit	Minor Crit	Meets?	Major Crit	Minor Crit	Meets?	Major Crit	Minor Crit	Meets?
00:00	58	6	EB	600-No	200-No	---	900-No	100-No	---	720-No	160-No	---
01:00	30	3	EB	600-No	200-No	---	900-No	100-No	---	720-No	160-No	---
02:00	30	3	EB	600-No	200-No	---	900-No	100-No	---	720-No	160-No	---
03:00	30	3	EB	600-No	200-No	---	900-No	100-No	---	720-No	160-No	---
04:00	79	9	EB	600-No	200-No	---	900-No	100-No	---	720-No	160-No	---
05:00	297	33	EB	600-No	200-No	---	900-No	100-No	---	720-No	160-No	---
06:00	1,049	117	EB	600-Yes	200-No	Major	900-Yes	100-Yes	Both	720-Yes	160-No	Major
07:00	1,620	215	WB	600-Yes	200-Yes	Both	900-Yes	100-Yes	Both	720-Yes	160-Yes	Both
08:00	1,440	148	WB	600-Yes	200-No	Major	900-Yes	100-Yes	Both	720-Yes	160-No	Major
09:00	1,263	120	EB	600-Yes	200-No	Major	900-Yes	100-Yes	Both	720-Yes	160-No	Major
10:00	1,139	115	EB	600-Yes	200-No	Major	900-Yes	100-Yes	Both	720-Yes	160-No	Major
11:00	1,010	112	EB	600-Yes	200-No	Major	900-Yes	100-Yes	Both	720-Yes	160-No	Major
12:00	1,267	141	EB	600-Yes	200-No	Major	900-Yes	100-Yes	Both	720-Yes	160-No	Major
13:00	1,267	141	EB	600-Yes	200-No	Major	900-Yes	100-Yes	Both	720-Yes	160-No	Major
14:00	1,148	128	EB	600-Yes	200-No	Major	900-Yes	100-Yes	Both	720-Yes	160-No	Major
15:00	1,128	125	EB	600-Yes	200-No	Major	900-Yes	100-Yes	Both	720-Yes	160-No	Major
16:00	1,406	156	EB	600-Yes	200-No	Major	900-Yes	100-Yes	Both	720-Yes	160-No	Major
17:00	1,895	255	EB	600-Yes	200-Yes	Both	900-Yes	100-Yes	Both	720-Yes	160-Yes	Both
18:00	1,366	178	EB	600-Yes	200-No	Major	900-Yes	100-Yes	Both	720-Yes	160-Yes	Both
19:00	831	114	WB	600-Yes	200-No	Major	900-No	100-Yes	Minor	720-Yes	160-No	Major
20:00	753	84	EB	600-Yes	200-No	Major	900-No	100-No	---	720-Yes	160-No	Major
21:00	554	62	EB	600-No	200-No	---	900-No	100-No	---	720-No	160-No	---
22:00	218	24	EB	600-No	200-No	---	900-No	100-No	---	720-No	160-No	---
23:00	99	11	EB	600-No	200-No	---	900-No	100-No	---	720-No	160-No	---

DEPARTMENT OF TRANSPORTATION
STATE OF GEORGIA

INTERDEPARTMENT CORRESPONDENCE

FILE CSSTP-0006-00(327) BARROW COUNTY
P.I No. 0006327

DATE July 12, 2010

FROM Paul V. Liles, Jr., P.E., State Bridge Engineer

TO Bobby Hilliard, P.E., State Program Delivery Engineer
Attn: Douglas Fadool

SUBJECT **BRIDGE DESIGN VALUE ENGINEERING RESPONSE**

The Value Engineering Study for the above referenced project dated April 29, 2010 contained five VE Alternatives requiring responses from the Bridge Office, VE Alternatives 2, 19, 25, 26 and 28. Below are our recommendations for these alternatives.

VE Alternative 2 – "Realign West Winder Bypass bridge over Bankhead Highway, the CSX Railroad and SR 8 closer to a 90 degree skew."

Recommendation: **Possible Implementation**. Structurally it is more efficient to construct the proposed bridge over Bankhead Highway, CSX Transportation and SR 8 with minimal skew. However, at this site other factors must be considered by the engineer of record to determine the most economical solution including alignment, profile, horizontal clearances, vertical clearances, ROW, drainage, etc.

VE Alternative 19 – "Use vertical bridge abutments in lieu of ends with sloped paving."

Recommendation: **Do Not Implement**. Based on our estimate there would be a cost increase to implement this alternative. In addition to cost, long term there are more maintenance issues with MSE walls and the approach roadway than there are with typical spill through abutments. MSE wall abutments limit the possibility of future expansion for both the road being carried as well as the facility beneath the structure. Due to sequence of construction, coordination with subcontractors and equipment, bridge costs and wall costs are higher than the general bridge and wall costs for separate structures.

JUL 13

VE Alternative 25 – "Delete the center pier for the West Winder Bypass bridge over Bankhead Highway, CSX Railroad and SR 8."

Recommendation: **Do Not Implement**. The project is currently in the concept phase; this alternative should have been a Design Suggestion. There is not sufficient information at this point in the design to determine which option is most efficient. Once the survey is completed and the structure type and length are determined then economical span arrangements will be developed.

VE Alternative 26 – "Use 10-ft.-wide shoulders on the bridge to match the roadway shoulders in lieu of 12-ft.-wide shoulders."

Recommendation: **Implement with Modifications**. In accordance with Policy 4265-9 (Geometric Design Guide for Bridges on Local Roads and Streets, Not Having State Route Numbers) the outside bridge shoulder width should be a minimum of 8 feet. The designer needs to determine if a wider shoulder is warranted for this project based on volume of truck traffic.

VE Alternative 28 – "Shorten the West Winder Bridge over Bankhead Highway, CSX Railroad and SR 8 by 22ft. 6 in."

Recommendation: **Do Not Implement**. The project is currently in the concept phase; this alternative should have been a Design Suggestion. Constructing an obstruction within the clear-zone is not desirable. There is not sufficient information at this point in the design to determine which option is most efficient. Once the survey is completed and the structure type and length are determined then economical span arrangements will be developed.

If you have any questions and/or comments, please contact Bill DuVall of the Bridge Design Office at (404) 631-1883 or at email address bduvall@dot.ga.gov.

PVL/WMD

cc: Ron Wishon, Engineering Services
Bill DuVall, Bridge Office

DEC 14 2007

NEIL
BILLY R
PROJECT FILE

Department of Transportation

GENA L. ABRAHAM
COMMISSIONER
(404) 656-5206

GERALD M. ROSS, P.E.
CHIEF ENGINEER
(404) 656-5277

State of Georgia
#2 Capitol Square, S.W.
Atlanta, Georgia 30334-1002

BUDDY GRATTON, P.E.
DEPUTY COMMISSIONER
(404) 656-5212

EARL L. MAHFUZ
TREASURER
(404) 656-5224

December 11, 2007

The Honorable Doug Garrison
Commission Chairman
233 East Broad Street
Winder, Georgia 30680

Dear Chairman Garrison:

I am returning for your files an executed agreement between the Georgia Department of Transportation and the Barrow County for the following project:

PROJECT#: CSSTP-0006-00(327) Barrow County, P.I. #0006327

We look forward to working with you on the successful completion of the joint project. Should you have any questions, please contact the Project Manager Eugene Hopkins at (404)656-5449.

Sincerely,

James T. Simpson

James T. Simpson,
Financial Management Administrator

JTS:rm
Enclosure
c: Bob Rogers
Russell McMurray – District 1
Jeff Baker – Utilities

ATTACHMENT "A"

Project Number: CSSTP-0006-00(327) – Barrow County

Project	Work	Preliminary Engineering		Right of Way		Construction		Utilities
(PI#, Project #Description)	Type	Funding	Design	Funding of Real Property	Acquisition & Administrative Cost by	Funding	Letting by	Relocation Costs by
0006327 CSSTP-0006-00(327) West Winder Bypass from Tom Miller Road to SR 316 including SR 316 Interchange	Roadway Project	100% by Locals	Barrow County	80% Federal 20% State L240	Barrow County	80% Federal 20% State L240	GDOT	100% GDOT

Note: 1. Maximum allowable GDOT reimbursible amount may be shown above in lieu of percentages when applicable. Local Government will only be reimbursed the percentage of the accured invoiced amounts up to but not to exceed the maximum amount indicated.

2. Cash participation limits may be shown above in lieu of percentages when applicable.

3. Barrow County will be responsible for Engineering, Environmental Permitting, Right of Way Acquisition except Real Estate costs, which will be reimbursed on a quartly basis, and Wetland and Stream Mitigation costs, up to and not to exceed $6,800,000.