ORIGINAL TO GENERAL FILES

DEPARTMENT OF TRANSPORTATION
STATE OF GEORGIA

OFFICE OF DESIGN POLICY & SUPPORT
INTERDEPARTMENTAL CORRESPONDENCE

FILE P.I. # 0010412

OFFICE Design Policy & Support

Jones County
GDOT District 3 - Thomaston
SR 49 @ Norfolk Southern Railroad
Bridge Replacement

DATE 5/28/2014

FROM for Brent Story, State Design Policy Engineer

TO SEE DISTRIBUTION

SUBJECT **APPROVED CONCEPT REPORT**

Attached is the approved Concept Report for the above subject project.

Attachment

DISTRIBUTION:

Glenn Bowman, Director of Engineering
Joe Carpenter, Director of P3/Program Delivery
Genetha Rice-Singleton, Assistant Director of P3/Program Delivery
Albert Shelby, State Program Delivery Engineer
Bobby Hilliard, Program Control Administrator
Cindy VanDyke, State Transportation Planning Administrator
Hiral Patel, State Environmental Administrator
Ben Rabun, State Bridge Engineer
Kathy Zahul, State Traffic Engineer
Angela Robinson, Financial Management Administrator
Lisa Myers, State Project Review Engineer
Charles "Chuck" Hasty, State Materials Engineer
Mike Bolden, State Utilities Engineer
Jeff Fletcher, Statewide Location Bureau Chief
Andy Casey, State Roadway Design Engineer
Attn: Jason Mobley, District Design Engineer
Thomas Howell, District Engineer
Dan Pass, District Preconstruction Engineer
Kerry Gore, District Utilities Engineer
Adam Smith, Project Manager
BOARD MEMBER - 8th Congressional District

DEPARTMENT OF TRANSPORTATION
STATE OF GEORGIA
PROJECT CONCEPT REPORT

Project Type: Bridge Replacement
P.I. Number: 0010412
GDOT District: District 3
County: Jones
Federal Route Number:
State Route Number: SR 49
Project Number:

Bridge replacement on SR 49/Old Garrison Rd @ Norfolk Southern RR 8.5 MI S of Gray, GA

Submitted for approval:

District Engineer — DATE 2/10/14

State Program Delivery Engineer — DATE 02-21-14

GDOT Project Manager — DATE 2/19/14

Recommendation for approval:

Program Control Administrator — DATE

State Environmental Administrator — DATE HIRAL PATEL*/EKP 3/7/2014

Project Review Engineer — DATE LISA MYERS*/EKP 3/19/2014

State Bridge Design Engineer — DATE BEN RABUN*/EKP 3/25/2014

FOR State Utilities Engineer — DATE JUN BIRNKAMMER*/EKP 3/17/2014

State Traffic Engineer — DATE

State Transportation Financial Management Administrator — DATE

The concept as presented herein and submitted for approval is consistent with that which is included in the Regional Transportation Plan (RTP) and/or the State Transportation Improvement Program (STIP).

State Transportation Planning Administrator — DATE CINDY VANDYKE*/EKP 3/14/2014

*- RECOMMENDATION ON FILE

PROJECT LOCATION

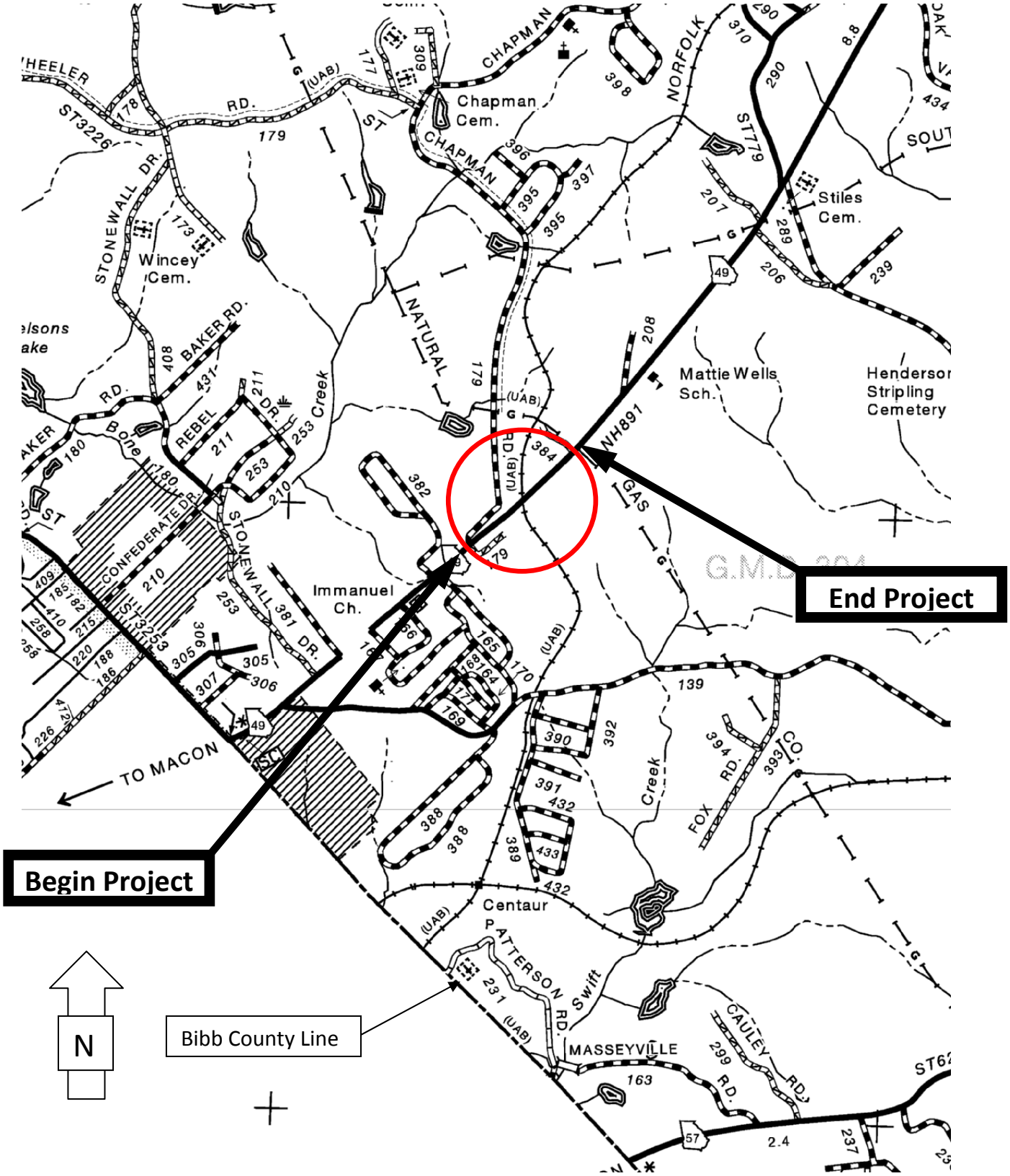

PLANNING & BACKGROUND

Project Justification Statement: Office of Bridge Design

This bridge (Structure ID 169-0016-0; SR 49 over Norfolk Southern Railroad) was built in 1960. The bridge consists of six spans of steel girders on concrete caps with concrete columns. The overall condition of this bridge would be classified as poor to satisfactory with a sufficiency rating of 51.57. The deck is in poor condition due to advanced concrete cracking and spalling. The superstructure is in satisfactory condition with some minor corrosion on some members. The substructure is in fair condition due to some minor concrete spalling and deterioration. Due to the structural integrity, based on the condition of the deck, replacement of this bridge is recommended.

Existing Conditions:

Currently, SR 49 consists of two travel lanes and one two-way left-turn lane north and south of the existing bridge. Two minor intersections occur within the proposed project limits: one at Chapman Rd and one at Kent Rd. There is an existing 306 ft long 4' x 6' culvert south of the bridge. A major gas pipeline crosses SR 49 north of the bridge between Kent Rd and Mattie Wells Drive. Other major utilities include overhead power, telephone, cable, water, and sewer. Currently, a driveway that goes across railroad property, under the existing bridge, and along the right of way ties in to Chapman Road providing access to three parcels.

Other projects in the area:

Project No.: STP00-0089-01(027)
PI No.: 332450
Description: Widening of SR 49 from Griswoldville Rd to SR 18
Impacts: This widening project is likely to come after the bridge replacement; therefore, no impacts will be anticipated. The permanent offset bridge will accommodate two lanes of this future widening. A second bridge, as part of the widening project, will be built on the current alignment to accommodate the remaining two lanes.

Description of the proposed project:

The proposed project consists of replacing the bridge on SR 49 over the Norfolk Southern Railroad, 8.5 miles south of Gray, GA. The new bridge will accommodate two lanes of travel and will replace the existing two lane substandard bridge. The project length is approximately 0.68 miles.

MPO: Macon - Bibb MPO MPO Project ID MCN-119

Regional Commission: Middle Georgia RC RC Project ID N/A

Congressional District(s): 8

Federal Oversight: ☐ Full Oversight ☒ Exempt ☐ State Funded ☐ Other

Projected Traffic: AADT

SR 49 (Mainline)
Current Year (2013): 10400 Open Year (2018): 11500 Design Year (2038): 15450
Traffic Projections Performed by: GDOT Office of Planning

Chapman Road (Side road)
Current Year: 1570
Traffic obtained from GDOT's Transportation Data Viewer application in 2013.
Traffic assignments attached.

Functional Classification:

SR 49: Urban Principal Arterial*
*SR 49 changes to a rural minor arterial at the north end of the bridge. It will be treated as urban due to the developing area.

Chapman Road: Urban Local Road

Complete Streets - Bicycle, Pedestrian, and/or Transit Warrants:

Warrants met: ☐ None ☒ Bicycle ☒ Pedestrian ☐ Transit

This project is within close proximity to Wells Elementary School and residential neighborhoods and therefore meets warrants for pedestrian and bicycle accommodation as expressed in section 9.4 of the GDOT Design Policy Manual. There is also a recreational area including baseball fields in the vicinity. Pedestrians will be accommodated with a sidewalk and bicycles will be accommodated on a paved shoulder. This section of SR 49 is currently not part of a designated bike route.

Is this a 3R (Resurfacing, Restoration, & Rehabilitation) Project? ☒ No ☐ Yes

Pavement Evaluation and Recommendations

Preliminary Pavement Evaluation Summary Report Required? ☒ No ☐ Yes
Preliminary Pavement Type Selection Report Required? ☒ No ☐ Yes
Feasible Pavement Alternatives: ☒ HMA ☐ PCC ☐ HMA & PCC

DESIGN AND STRUCTURAL

Description of proposed project: The proposed project consists of a bridge replacement on SR 49 @ Norfolk Southern Railroad 8.5 miles south of Gray, GA in Jones County. The new bridge will accommodate two lanes of travel and will replace the existing two lane structurally deficient bridge. The project length is approximately 0.68 miles.

Major Structures:

Structure	Existing	Proposed
Bridge ID# 169-0016-0	306' in length, 28' roadway width, 34.3' deck width, 2' curb/sidewalk width, 51.57 sufficiency rating	320' in length, (2) 12' travel lanes, 45' deck width, (2) 8' shoulder widths, (1) 5' sidewalk width
Structure	**Existing**	**Proposed**
Concrete Box Culvert	215' in length, 4' W X 6' H, 1.17% Slope	Remove or extend structure. Re-route stream.

Mainline Design Features: SR 49/Old Garrison Rd (Urban Principal Arterial)

Feature	Existing	Standard*	Proposed
Typical Section			
- Number of Lanes	**2**	**n/a**	**2**
- Lane Width(s)	**12'**	**12'**	**12'**
- Median Width & Type	**n/a**	**n/a**	**n/a**
- Outside Shoulder or Border Area Width	**varies**	**10'**	**10' RT, 18'-6" LT**
- Outside Shoulder Slope	**varies**	**6%**	**6%**
- Inside Shoulder Width	**n/a**	**n/a**	**n/a**
- Sidewalks	**none**	**5'**	**5'**
- Auxiliary Lanes	**n/a**	**n/a**	**n/a**
- Bike Lanes	**n/a**	**4'**	**4' ****
Posted Speed	**55 mph**		**55 mph**
Design Speed	**>55 mph**	**55 mph**	**55 mph**
Min Horizontal Curve Radius	**11000 ft**	**1060 ft**	**1060 ft**
Maximum Superelevation Rate	**n/a**	**6%**	**6%**
Maximum Grade	**5.1%**	**6%**	**6%**
Access Control	**By Permit**	**n/a**	**By Permit**
Design Vehicle	**unknown**	**WB-62**	**WB-62**
Pavement Type	**Asphalt**	**n/a**	**Asphalt**

*According to current GDOT design policy if applicable
**Bike lane will be provided via the paved shoulder.

Side Road Design Features: CR 179 Chapman Road/East Chapman Road (Urban Local Road)

Feature	Existing	Standard*	Proposed
Typical Section			
- **Number of Lanes**	**2**	**n/a**	**2**
- **Lane Width(s)**	**9-10'**	**11-12'**	**11'**
- **Median Width & Type**	**n/a**	**n/a**	**n/a**
- **Outside Shoulder or Border Area Width**	**varies**	**8'**	**8'**
- **Outside Shoulder Slope**	**varies**	**6%**	**6%**
- **Inside Shoulder Width**	**n/a**	**n/a**	**n/a**
- **Sidewalks**	**none**	**n/a**	**none**
- **Auxiliary Lanes**	**n/a**	**n/a**	**n/a**
- **Bike Lanes**	**n/a**	**n/a**	**n/a**
Posted Speed	**35 mph**		**35 mph**
Design Speed	**15 mph**	**35 mph**	**35 mph**
Min Horizontal Curve Radius	**60 ft**	**340 ft**	**340 ft**
Maximum Superelevation Rate	**n/a**	**6%**	**6%**
Maximum Grade	**3.1%**	**11%**	**11%**
Access Control	**By Permit**	**n/a**	**By Permit**
Design Vehicle	**unknown**	**SU**	**SU**
Pavement Type	**Asphalt**	**n/a**	**Asphalt**

*According to current GDOT design policy if applicable

Major Interchanges/Intersections: None

Lighting required: ☒ No ☐ Yes

Off-site Detours Anticipated: ☒ No ☐ Undetermined ☐ Yes

Transportation Management Plan [TMP] Required: ☐ No ☒ Yes
If Yes: Project classified as: ☒ Non-Significant ☐ Significant
TMP Components Anticipated: ☒ TTC ☐ TO ☐ PI

Highway Safety Manual Analysis: An HSM analysis is not included. The design and construction of the short approaches (less than 0.5 miles each) will meet all standards. In addition, given the relatively narrow scope of this project, an HSM analysis is considered unnecessary.

Design Exceptions to FHWA/AASHTO controlling criteria anticipated:

FHWA/AASHTO Controlling Criteria	No	Undeter -mined	Yes	Appvl Date (if applicable)
1. Design Speed	☒	☐	☐	
2. Lane Width	☒	☐	☐	
3. Shoulder Width	☒	☐	☐	
4. Bridge Width	☒	☐	☐	
5. Horizontal Alignment	☒	☐	☐	
6. Superelevation	☒	☐	☐	
7. Vertical Alignment	☒	☐	☐	
8. Grade	☒	☐	☐	
9. Stopping Sight Distance	☒	☐	☐	
10. Cross Slope	☒	☐	☐	
11. Vertical Clearance	☒	☐	☐	
12. Lateral Offset to Obstruction	☒	☐	☐	
13. Bridge Structural Capacity	☒	☐	☐	

Design Variances to GDOT Standard Criteria anticipated:

GDOT Standard Criteria	Reviewing Office	No	Undeter-mined	Yes	Appvl Date (if applicable)
1. Access Control/Median Openings	DP&S	☒	☐	☐	
2. Intersection Sight Distance	DP&S	☒	☐	☐	
3. Intersection Skew Angle	DP&S	☒	☐	☐	
4. Lateral Offset to Obstruction	DP&S	☒	☐	☐	
5. Rumble Strips	DP&S	☒	☐	☐	
6. Safety Edge	DP&S	☒	☐	☐	
7. Median Usage	DP&S	☒	☐	☐	
8. Roundabout Illumination Levels	DP&S	☒	☐	☐	
9. Complete Streets	DP&S	☒	☐	☐	
10. ADA & PROWAG	DP&S	☒	☐	☐	
11. GDOT Construction Standards	DP&S	☒	☐	☐	
12. GDOT Drainage Manual	DP&S	☒	☐	☐	
13. GDOT Bridge & Structural Manual	Bridges	☒	☐	☐	

VE Study anticipated: ☒ No ☐ Yes ☐ Completed – Date:

UTILITY AND PROPERTY

Temporary State Route needed: ☒ No ☐ Yes ☐ Undetermined

Railroad Involvement: This project will require railroad coordination. The proposed bridge crosses over a single railroad track owned by the Central of Georgia Railroad Company-Norfolk Southern and a right of way corridor owned by CSX Transportation Inc. The railroad has expressed the intent for an additional track to the west of the existing track alignment. Coordination is needed for a possible track

crossing to provide access to Chapman Road for three parcels. See attachment regarding the initial railroad coordination.

Utility Involvements: See the attached concept utility report.

SUE Required: ☐ No ☒ Yes

Public Interest Determination Policy and Procedure recommended (Utilities)? ☒ No ☐ Yes

Right-of-Way (ROW): Mainline Existing width: 130-325 ft Proposed width: 130-415 ft

Side Road Existing width: 78 ft Proposed width: 78 ft

Required Right-of-Way anticipated: ☐ No ☒ Yes ☐ Undetermined
Easements anticipated: ☐ None ☒ Temporary ☒ Permanent ☒ Utility ☐ Other

Anticipated total number of impacted parcels:		9
Displacements anticipated:	Businesses:	1
	Residences:	
	Other:	
	Total Displacements:	1

Location and Design approval: ☐ Not Required ☒ Required

CONTEXT SENSITIVE SOLUTIONS

Issues of Concern: None

Context Sensitive Solutions Proposed: N/A

ENVIRONMENTAL & PERMITS

Anticipated Environmental Document:

GEPA: ☐ **NEPA:** ☒ CE ☐ EA/FONSI ☐ EIS

MS4 Compliance – Is the project located in an MS4 area? ☐ No ☒ Yes

MS4 Calculations Attached. An enhanced swale is proposed in all four quadrants of the project.

Environmental Permits/Variances/Commitments/Coordination anticipated:

Permit/ Variance/ Commitment/ Coordination Anticipated	No	Yes	Remarks
1. U.S. Coast Guard Permit	☒	☐	
2. Forest Service/Corps Land	☒	☐	
3. CWA Section 404 Permit	☐	☒	
4. Tennessee Valley Authority Permit	☒	☐	
5. Buffer Variance	☐	☒	Maybe
6. Coastal Zone Management Coordination	☒	☐	
7. NPDES	☐	☒	
8. FEMA	☐	☒	
9. Cemetery Permit	☒	☐	
10. Other Permits	☒	☐	
11. Other Commitments	☐	☒	Maybe. Avoidance of sensitive resources.
12. Other Coordination	☐	☒	FHWA, USFWS, USACE

Is a PAR required? ☒ No ☐ Yes ☐ Completed – Date:

Environmental Comments and Information:

NEPA/GEPA: The environmental document has not been approved. Recreational areas are within the vicinity of the project. A CE would be the appropriate NEPA document for this project. No significant risks identified.

Ecology: The project outfalls are not within one mile of a biota impaired stream, nor do they discharge into one. An ecology report has not been prepared.

History: A desktop search of NAHRGIS found:

- Bridge not eligible
- Eligible railroad in APE
- Four properties dated, variously, 1958-1960 are APE (tax assessor site)
- No resources in NAHRGIS
- No NR listed resources

Archeology: An archaeology report has not been prepared.

Air Quality:

Is the project located in a PM 2.5 Non-attainment area? ☒ No ☐ Yes
Is the project located in an Ozone Non-attainment area? ☒ No ☐ Yes
Is a Carbon Monoxide hotspot analysis required? ☒ No ☐ Yes

Air studies have not been prepared.

Noise Effects: Noise studies have not been prepared.

Public Involvement: Jones County has requested a public meeting; therefore, a Public Information Open House (PIOH) will be conducted.

Major stakeholders: Jones County Board of Education, Jones County Board of Commissioners, Martin Marietta Aggregates, Central of Georgia Railroad Company-Norfolk Southern, CSX Transportation Inc., and A1 Pallet Recycling Inc.

CONSTRUCTION

Issues potentially affecting constructability/construction schedule: None

Early Completion Incentives recommended for consideration: ☒ No ☐ Yes

COORDINATION, ACTIVITIES, RESPONSIBILITIES, AND COSTS

Initial Concept Meeting: N/A

Concept Meeting: The concept team meeting was held on September 18, 2013. Issues discussed included potential utility conflicts and expenses, access to property adjacent to the railroad, and bridge barrier to protect pedestrians. The minutes are attached.

Other coordination to date: A PTIP Meeting was held on July 14, 2011 and a meeting with Jones County Commission was held on May 21, 2013. Responses to questions from Jones County regarding a pedestrian barrier on the bridge are attached. Using the FAA's online Notice Criteria Tool, it was determined that FAA coordination will not be necessary. The PTIP meetings are attached.

Project Activity	Party Responsible for Performing Task(s)
Concept Development	GDOT Roadway Design
Design	GDOT Roadway Design/GDOT Bridge Design
Right-of-Way Acquisition	GDOT Right of Way
Utility Relocation	Utility Owners
Letting to Contract	GDOT Bidding Administration
Construction Supervision	GDOT Construction
Providing Material Pits	Contractor
Providing Detours	N/A
Environmental Studies, Documents, and Permits	GDOT Environmental
Environmental Mitigation	GDOT Environmental
Construction Inspection & Materials Testing	GDOT Construction

Project Cost Estimate Summary and Funding Responsibilities:

	Breakdown of PE	ROW	Reimb. Utility	CST*	Reimb. Railroad Cost**	Env. Mitigation	Total Cost
By Whom	GDOT	GDOT	GDOT	GDOT	GDOT	GDOT	
$ Amount	295,000.00	655,000.00	160,000.00	3,982,287.73	151,000	0	5,244,488.47
Date of Estimate	4/9/2012	10/16/2013	8/15/2013	4/8/2014	9/20/2013	12/4/2013	

*CST Cost includes: Construction, Engineering and Inspection, and Liquid AC Cost Adjustment.
**See attached cost estimate.

ALTERNATIVES DISCUSSION

Alternative selection:

Preferred Alternative 1: The preferred alternative is a permanent offset bridge replacement to the northwest of the existing bridge.			
Estimated Property Impacts:	**9**	**Estimated Total Cost:**	**$5,244,488.47**
Estimated ROW Cost:	**$655,000.00**	**Estimated CST Time:**	**18 months**
Rationale: Community and economic impacts minimized. A temporary detour bridge will not be needed. This will also facilitate 2 of the proposed future four lanes. Provides two southbound lanes for future planned widening of SR 49.			

No-Build Alternative: Leave existing bridge in service, no new construction			
Estimated Property Impacts:	**0**	**Estimated Total Cost:**	**0**
Estimated ROW Cost:	**0**	**Estimated CST Time:**	**0**
Rationale: Does not meet project justification.			

Alternative 2: Offsite detour, bridge replacement in current alignment.			
Estimated Property Impacts:	**2**	**Estimated Total Cost:**	**$13,270,549.82**
Estimated ROW Cost:	**$164,000.00**	**Estimated CST Time:**	**12 months**
Rationale: Alternative 2 was not selected due to the high total cost which includes the road user cost associated with the detour. The detour would add 18.8 miles of travel and negatively impact the economy and community. Current connectivity between lower Jones County and the fire department and Mattie Wells School should be maintained.			

Alternative 3: Onsite detour, bridge replacement in current alignment.			
Estimated Property Impacts:	**4**	**Estimated Total Cost:**	**$5,535,294.87**
Estimated ROW Cost:	**$327,500.00**	**Estimated CST Time:**	**18 months**
Rationale: Alternative 3 was not selected due to the increase in construction costs that a temporary detour bridge would impose.			

Alternative 4: Permanent offset bridge replacement (southeast of existing bridge).			
Estimated Property Impacts:	**8**	**Estimated Total Cost:**	**$5,142,751.17**
Estimated ROW Cost:	**$600,000.00**	**Estimated CST Time:**	**18 months**
Rationale: Alternative 4 would have adverse impacts to public parks on the southeast of the existing bridge, and therefore is not being considered. Community and environmental impacts would be substantial.			

Comments:

LIST OF ATTACHMENTS/SUPPORTING DATA

1. Concept Layout
2. Typical sections
3. Cost Estimates:
   a. Construction including Engineering and Inspection
   b. Completed Fuel & Asphalt Price Adjustment forms
   c. Right-of-Way
   d. Utilities
   e. Environmental Mitigation (EPD, etc.)
   f. Railroad
4. Traffic assignments
5. Crash summaries
6. Bridge inventory
7. Preliminary Pavement Design
8. Minutes of Concept meetings
9. PTIP Meeting Minutes
10. Responses to Jones County
11. Railroad Coordination Email
12. MS4 Preliminary Hydrology Study Calculations
13. Concept Utility Report
14. Director of Engineering Email w/Attachment from Chief Engineer - Design Guidance

APPROVALS

Concur: Glen Bowman
Director of Engineering

Approve: Paul Mill
Chief Engineer

5/27/14
Date

DEPARTMENT OF TRANSPORTATION
STATE OF GEORGIA

CONCEPT LAYOUT - PERMANENT OFFSET LT

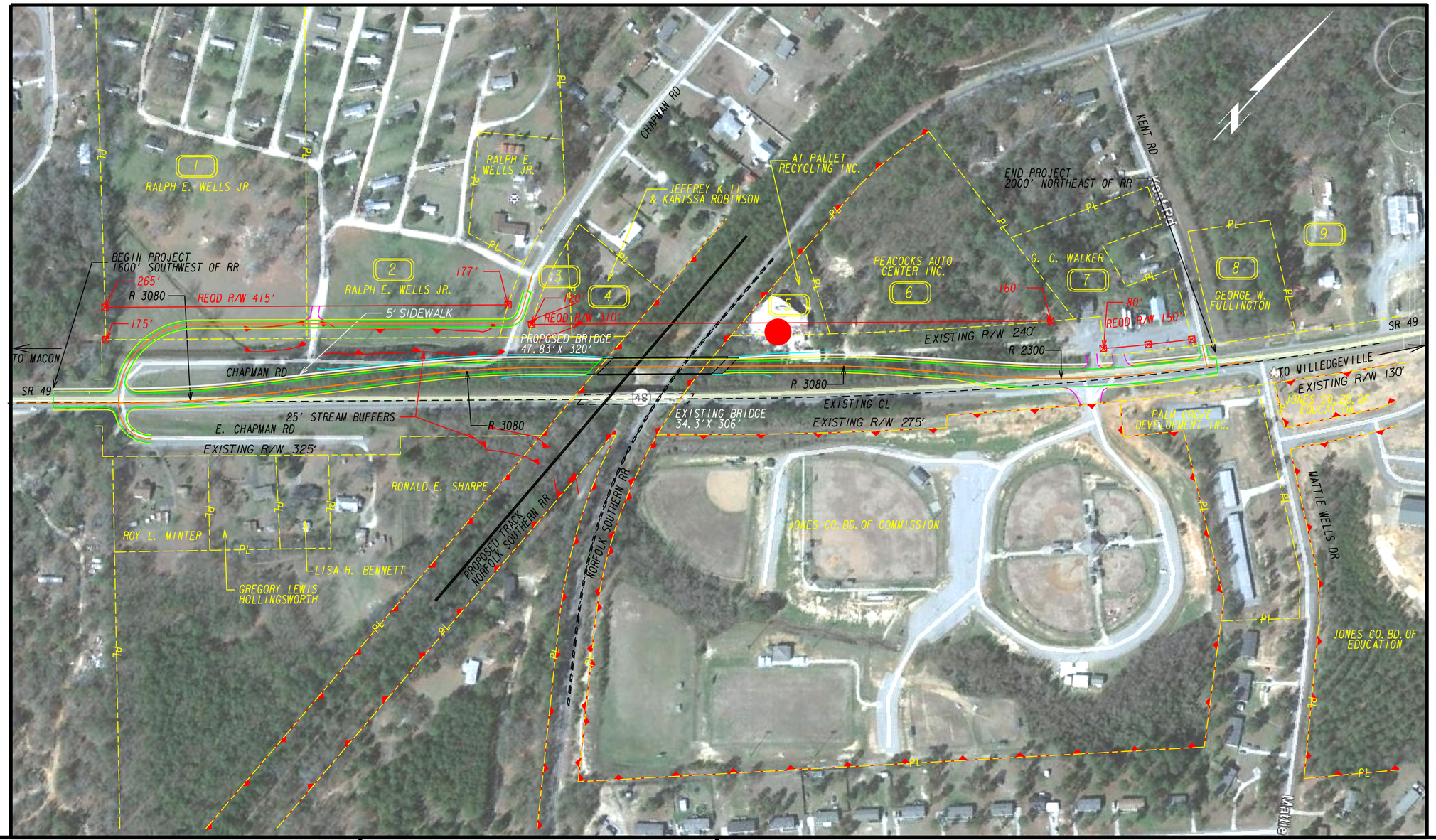

P.I. NO. 0010412
SR 49 @ NORFOLK SOUTHERN RR
8.5 MI SOUTH OF GRAY, GA

ESA - ENVIRONMENTALLY SENSITIVE AREA

DISPLACEMENT

PRELIMINARY CONCEPT
THE LOCATION AND TYPE OF ROADWAY WAY CHANGE.
PROPOSED RIGHT-OF-WAY WIDTHS ARE ESTIMATES.
CONCEPT DATE

SCALE IN FEET
0 300 600 1200

CONCEPT TYPICAL SECTIONS
P.I. No. 0010412
SR 49 AT NORFOLK SOUTHERN RR
8.5 MI SOUTH OF GRAY, GA

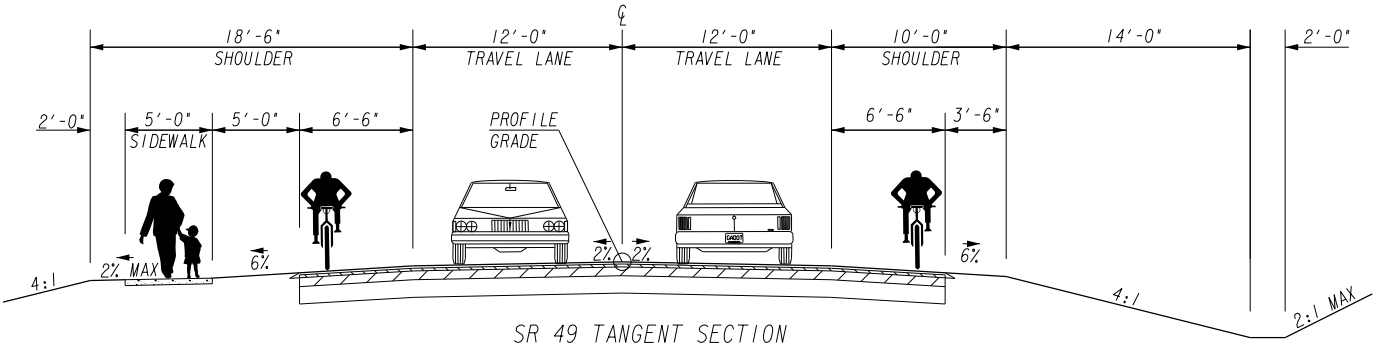

SR 49 TANGENT SECTION

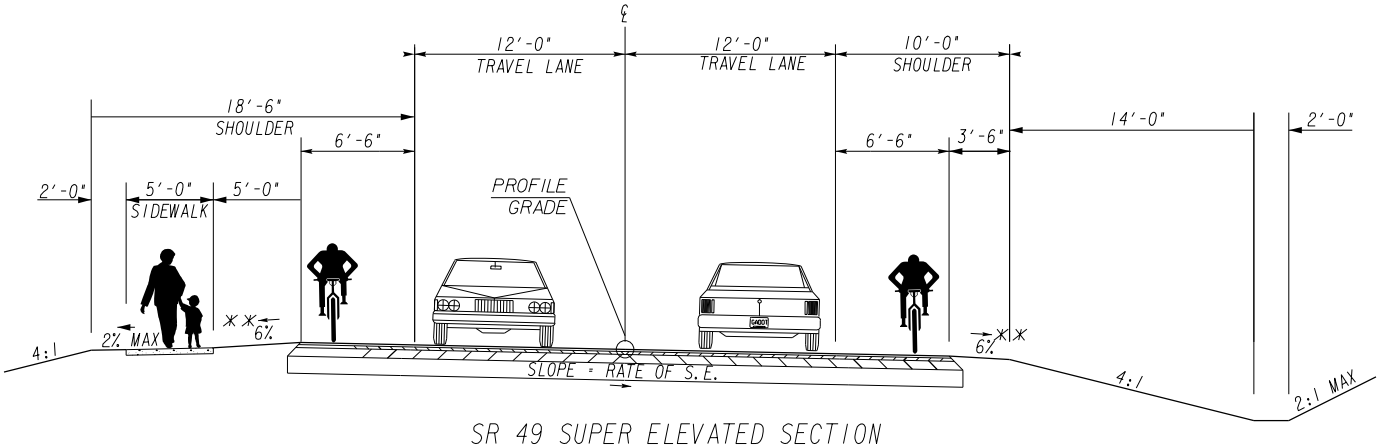

SR 49 SUPER ELEVATED SECTION

* SHOULDER TO SLOPE AT NORMAL RATE, HOWEVER, THE ALGEBRAIC DIFFERENCE IN PAVING SLOPE AND SHOULDER SLOPE SHALL NOT EXCEED 8%. MINIMUM SHOULDER SLOPE TO BE 2%.

** SHOULDER TO SLOPE AT NORMAL RATE OR SUPERELEVATION RATE, WHICHEVER IS GREATER.

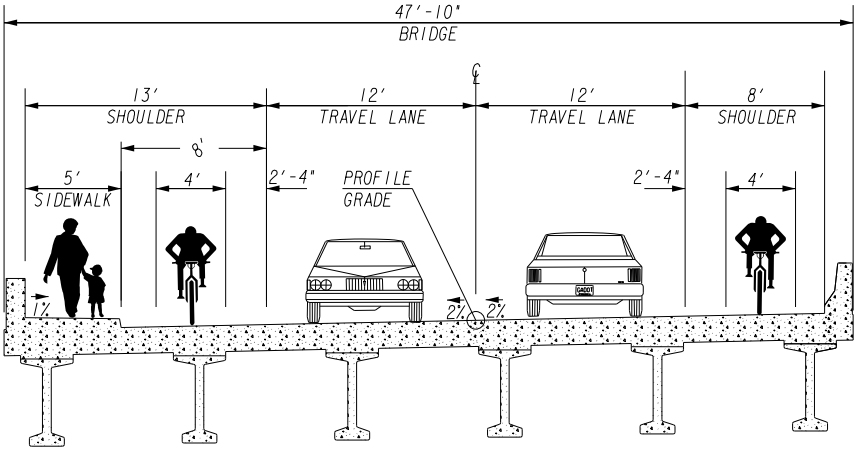

CONCEPT TYPICAL SECTIONS
P.I. No. 0010412
SR 49 AT NORFOLK SOUTHERN RR
8.5 MI SOUTH OF GRAY, GA

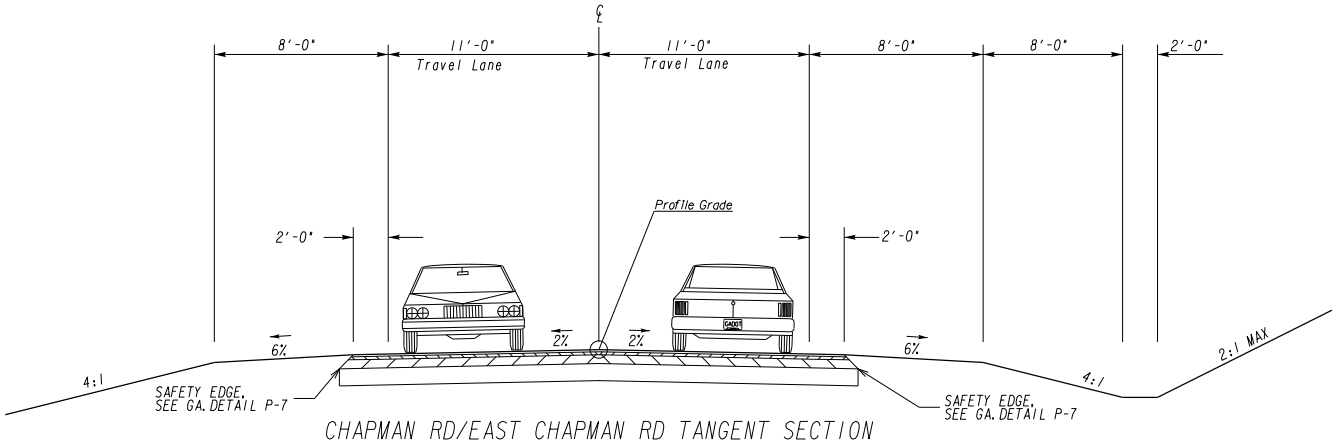

CHAPMAN RD/EAST CHAPMAN RD TANGENT SECTION

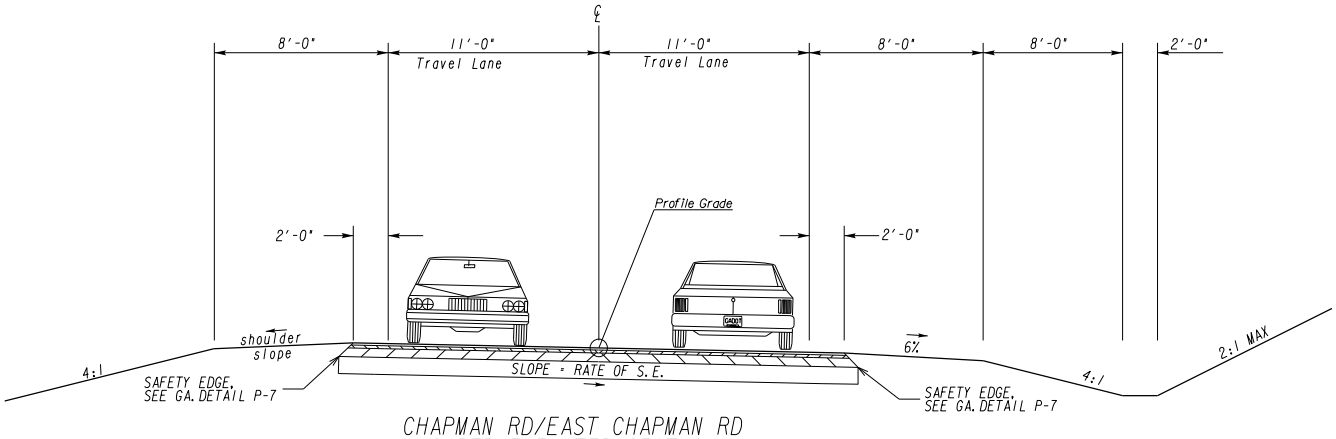

CHAPMAN RD/EAST CHAPMAN RD
SUPER ELEVATED SECTION

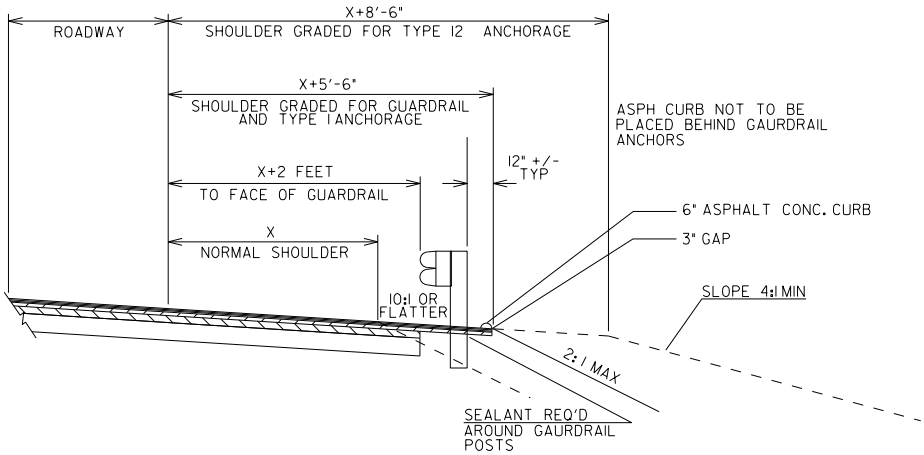

SHOULDER DETAIL FOR GUARDRAIL

NOT TO SCALE

CONCEPT TYPICAL SECTIONS
P.I. No. 0010412
SR 49 AT NORFOLK SOUTHERN RR
8.5 MI SOUTH OF GRAY, GA

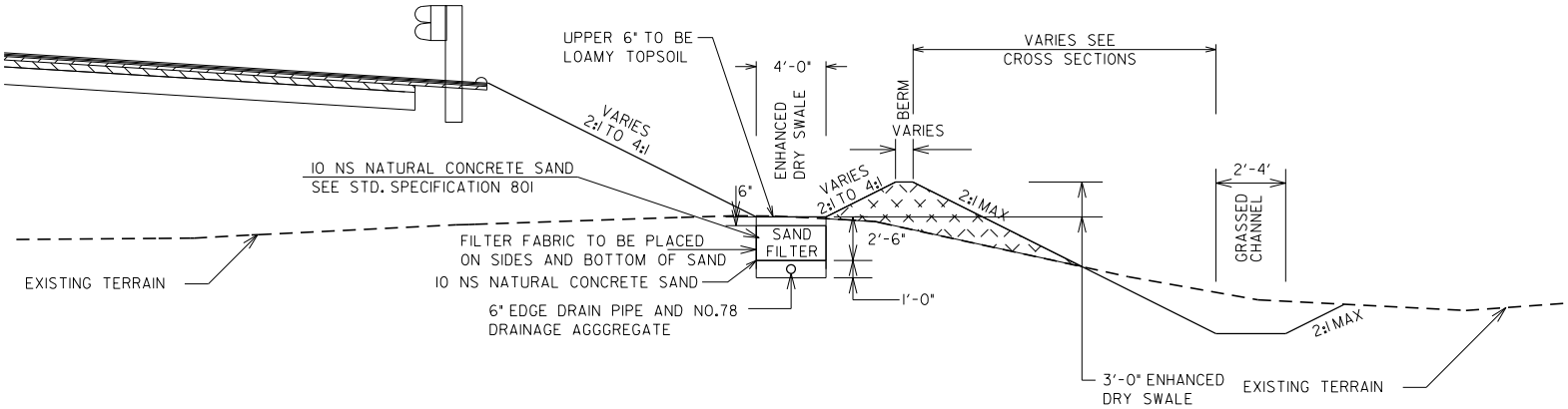

NOTE: INSTALL THE SAND FILTER AFTER THE FINAL GRADE HAS BEEN ESTABLISHED. MAT SIDE SLOPES IMMEDIATELY AFTER THE SAND FILTER HAS BEEN INSTALLED

ENHANCED DRY SWALE AND GRASSED CHANNEL DETAIL

NOT TO SCALE

DETAILED COST ESTIMATE

Job: 0010412

JOB NUMBER *0010412*

FED/STATE PROJECT NUMBER

Georgia Department of Transportation

SPEC YEAR: *01*

DESCRIPTION: *BRIDGE REPLACEMENT*

ITEMS FOR JOB 0010412

0010 - ROADWAY

ine Numb	ITEM	QUANTITY	UNITS	PRICE	DESCRIPTION	AMOUNT
0005	150-1000	1.000	LS	$30,000.00	TRAFFIC CONTROL - 0010412	$30,000.00
0009	153-1300	1.000	EA	$63,000.00	FIELD ENGINEERS OFFICE TP 3	$63,000.00
0080	210-0100	1.000	LS	$225,000.00	GRADING COMPLETE - 0010412	$225,000.00
0085	310-1101	15000.000	TN	$18.00	GR AGGR BASE CRS, INCL MATL	$270,000.00
0090	318-3000	1000.000	TN	$18.00	AGGR SURF CRS	$18,000.00
0370	402-1812	100.000	TN	$78.00	RECYL AC LEVELING,INC BM&HL	$7,800.00
0095	402-3121	5700.000	TN	$68.00	RECYL AC 25MM SP,GP1/2,BM&HL	$387,600.00
0440	402-3130	1700.000	TN	$72.00	RECYL AC 12.5MM SP,GP2,BM&HL	$122,400.00
0105	402-3190	2300.000	TN	$70.00	RECYL AC 19 MM SP,GP 1 OR 2 ,INC BM&HL	$161,000.00
0110	413-1000	2400.000	GL	$3.00	BITUM TACK COAT	$7,200.00
0115	432-5010	1100.000	SY	$8.00	MILL ASPH CONC PVMT,VARB DEPTH	$8,800.00
0120	433-1000	320.000	SY	$150.00	REINF CONC APPROACH SLAB	$48,000.00
0185	436-1000	500.000	LF	$11.00	ASPH CONC CURB - 200+25	$5,500.00
0445	441-0018	1000.000	SY	$38.00	DRIVEWAY CONCRETE, 8 IN TK	$38,000.00
0380	441-0104	2100.000	SY	$25.00	CONC SIDEWALK, 4 IN	$52,500.00
0450	441-0108	80.000	SY	$49.00	CONC SIDEWALK, 8 IN	$3,920.00
0195	441-0303	4.000	EA	$1,800.00	CONC SPILLWAY, TP 3	$7,200.00
0455	446-1100	200.000	LF	$9.00	PVMT REF FAB STRIPS, TP2,18 INCH WIDTH	$1,800.00
0460	456-2015	2.000	GLM	$1,500.00	INDENT. RUMB. STRIPS - GRND-IN-PL (SKIP)	$3,000.00
0200	500-0100	310.000	SY	$5.00	GROOVED CONCRETE	$1,550.00
0465	500-3101	500.000	CY	$400.00	CLASS A CONCRETE	$200,000.00
0390	500-3200	20.000	CY	$415.00	CL B CONC	$8,300.00
0395	511-1000	38000.000	LB	$0.75	BAR REINF STEEL	$28,500.00
0470	550-1241	800.000	LF	$23.14	STM DR PIPE 24",H 10-15	$18,511.51
0475	550-2240	300.000	LF	$27.39	SIDE DR PIPE 24",H 1-10	$8,216.69
0480	550-3324	3.000	EA	$927.48	SAFETY END SECTION 24",STD,4:1	$2,782.43
0485	550-3424	5.000	EA	$560.03	SAFETY END SECTION 24",SD,4:1	$2,800.13
0490	550-3524	3.000	EA	$844.26	SAFETY END SECTION 24",STD,6:1	$2,532.77
0495	550-3624	5.000	EA	$636.24	SAFETY END SECTION 24",SD,6:1	$3,181.22
0500	600-0001	500.000	CY	$153.50	FLOWABLE FILL	$76,752.34
0230	634-1200	10.000	EA	$115.00	RIGHT OF WAY MARKERS	$1,150.00
0235	641-1100	84.000	LF	$63.00	GUARDRAIL, TP T	$5,292.00
0240	641-1200	800.000	LF	$17.00	GUARDRAIL, TP W	$13,600.00
0245	641-5001	2.000	EA	$650.00	GUARDRAIL ANCHORAGE, TP 1	$1,300.00
0250	641-5012	2.000	EA	$1,860.00	GUARDRAIL ANCHORAGE, TP 12	$3,720.00
0255	643-8200	3000.000	LF	$1.25	BARRIER FENCE (ORANGE), 4 FT	$3,750.00
					SUBTOTAL FOR ROADWAY:	**$1,842,659.09**

CONFIDENTIALITY NOTICE: This document may contain confidential and/or privileged information. Any unauthorized duplication, disclosure, distribution/ retransmission or taking of any action in reliance upon the material in this document is strictly forbidden.

DETAILED COST ESTIMATE

Job: 0010412

0020 - EROSION CONTROL

ine Numb	ITEM	QUANTITY	UNITS	PRICE	DESCRIPTION	AMOUNT
0010	163-0232	8.000	AC	$600.00	TEMPORARY GRASSING	$4,800.00
0015	163-0240	500.000	TN	$175.00	MULCH	$87,500.00
0020	163-0300	4.000	EA	$1,200.00	CONSTRUCTION EXIT	$4,800.00
0030	163-0520	500.000	LF	$15.00	CONSTR AND REMOVE TEMP PIPE SLOPE DRAIN	$7,500.00
0035	163-0527	30.000	EA	$240.00	CNST/REM RIP RAP CKDM,STN P RIPRAP/SN BG	$7,200.00
0040	163-0528	1600.000	LF	$3.75	CONSTR AND REM FAB CK DAM -TP C SLT FN	$6,000.00
0045	163-0529	1000.000	LF	$3.25	CNST/REM TEMP SED BAR OR BLD STRW CK DM	$3,250.00
0025	163-0539	16.000	EA	$325.08	CONST AND REM RETROFIT-SL BD DM/W STN FL	$5,201.23
0049	163-0541	4.000	EA	$360.00	CONSTR & REM ROCK FILTER DAMS	$1,440.00
0075	165-0030	7000.000	LF	$1.00	MAINT OF TEMP SILT FENCE, TP C	$7,000.00
0265	165-0041	1100.000	LF	$2.50	MAINT OF CHECK DAMS - ALL TYPES	$2,750.00
0050	165-0071	500.000	LF	$1.00	MAINT OF SEDIMENT BARRIER - BALED STRAW	$500.00
0270	165-0096	16.000	EA	$114.83	MAINT OF RETROFIT-SLOT BD DAM/W ST FLT	$1,837.35
0055	165-0101	4.000	EA	$700.00	MAINT OF CONST EXIT	$2,800.00
0435	165-0110	4.000	EA	$150.00	MAINT OF ROCK FILTER DAM	$600.00
0060	167-1000	2.000	EA	$500.00	WATER QUALITY MONITORING AND SAMPLING	$1,000.00
0065	167-1500	18.000	MO	$500.00	WATER QUALITY INSPECTIONS	$9,000.00
0070	171-0030	14000.000	LF	$3.00	TEMPORARY SILT FENCE, TYPE C	$42,000.00
0275	603-2024	1200.000	SY	$40.00	STN DUMPED RIP RAP, TP 1, 24"	$48,000.00
0280	603-2182	800.000	SY	$36.00	STN DUMPED RIP RAP, TP 3, 24"	$28,800.00
0285	603-7000	2000.000	SY	$3.50	PLASTIC FILTER FABRIC	$7,000.00
0260	700-6910	21.000	AC	$1,000.00	PERMANENT GRASSING	$21,000.00
0295	700-7000	63.000	TN	$65.00	AGRICULTURAL LIME	$4,095.00
0300	700-8000	11.000	TN	$450.00	FERTILIZER MIXED GRADE	$4,950.00
0305	700-8100	750.000	LB	$2.30	FERTILIZER NITROGEN CONTENT	$1,725.00
0310	716-1000	1500.000	SY	$1.40	EROSION CONTROL MATS,WATERWAYS	$2,100.00
0315	716-2000	5000.000	SY	$1.24	EROSION CONTROL MATS, SLOPES	$6,200.00
					SUBTOTAL FOR EROSION CONTROL:	**$319,048.58**

0030 - STRUCTURAL

ine Numb	ITEM	QUANTITY	UNITS	PRICE	DESCRIPTION	AMOUNT
0410	211-0200	250.000	CY	$29.00	BR EXCAV, GRADE SEPARATION	$7,250.00
0165	540-1102	1.000	LS	$168,000.00	REM OF EX BR, BR NO - 1	$168,000.00
0320	543-9000	1.000	LS	$1,278,400.00	CONSTR OF BRIDGE COMPLETE - 1	$1,278,400.00
					SUBTOTAL FOR STRUCTURAL:	**$1,453,650.00**

CONFIDENTIALITY NOTICE: This document may contain confidential and/or privileged information. Any unauthorized duplication, disclosure, distribution/ retransmission or taking of any action in reliance upon the material in this document is strictly forbidden.

DETAILED COST ESTIMATE

Job: 0010412

0040 - SIGNAL SIGNING AND MARKING

ine Numb	ITEM	QUANTITY	UNITS	PRICE	DESCRIPTION	AMOUNT
0325	636-1020	72.000	SF	$17.00	HWY SGN,TP1MAT,REFL SH TP3	$1,224.00
0330	636-1033	50.000	SF	$22.00	HWY SIGNS, TP1MAT,REFL SH TP 9	$1,100.00
0335	636-2070	200.000	LF	$8.00	GALV STEEL POSTS, TP 7	$1,600.00
0340	636-5010	48.000	EA	$26.00	DELINEATOR, TP 1	$1,248.00
0405	652-9002	18.000	SY	$3.00	TRAFFIC STRIPE, YELLOW	$54.01
0430	653-0120	2.000	EA	$75.00	THERM PVMT MARK, ARROW, TP 2	$150.00
0345	653-2501	2.000	LM	$1,600.00	THERMO SOLID TRAF ST, 5 IN, WH	$3,200.00
0350	653-2502	2.000	LM	$1,600.00	THERMO SOLID TRAF ST, 5 IN YE	$3,200.00
0355	654-1001	100.000	EA	$3.00	RAISED PVMT MARKERS TP 1	$300.00
0425	654-1003	30.000	EA	$3.50	RAISED PVMT MARKERS TP 3	$105.00
0420	654-1010	10.000	EA	$32.00	RAISED PVMT MARKERS TP 10	$320.00
0415	657-1085	320.000	LF	$6.00	PRF PL SD PVT MKG,8",B/W,TP PB	$1,920.00
0409	657-6085	320.000	LF	$6.00	PRF PL SD PVMT MKG,8",B/Y,TPPB	$1,920.00
					SUBTOTAL FOR SIGNAL SIGNING AND MARKING:	**$16,341.01**

TOTALS FOR JOB 0010412

ITEMS COST:	**$3,631,698.68**
COST GROUP COST:	**$0.00**
ESTIMATED COST:	**$3,631,698.68**
CONTINGENCY PERCENT:	**0.00**
ENGINEERING AND INSPECTION:	**0.00**
ESTIMATED COST WITH CONTINGENCY AND E&I:	**$3,631,698.68**

CONFIDENTIALITY NOTICE: This document may contain confidential and/or privileged information. Any unauthorized duplication, disclosure, distribution/ retransmission or taking of any action in reliance upon the material in this document is strictly forbidden.

PROJ. NO.	0010412	CALL NO.
P.I. NO.	0010412	
DATE	4/8/2013	

INDEX (TYPE)	**DATE**	**INDEX**
REG. UNLEADED	Apr-14	$ 3.455
DIESEL		$ 3.930
LIQUID AC		$ 563.00

Link to Fuel and AC Index:
http://www.dot.ga.gov/doingbusiness/Materials/Pages/asphaltcementindex.aspx

LIQUID AC ADJUSTMENTS

PA=[((APM-APL)/APL)]xTMTxAPL

Asphalt

Price Adjustment (PA)				**165522**	**$**	**165,522.00**
Monthly Asphalt Cement Price month placed (APM)	Max. Cap	60%	$	900.80		
Monthly Asphalt Cement Price month project let (APL)			$	563.00		
Total Monthly Tonnage of asphalt cement (TMT)				490		

ASPHALT	**Tons**	**%AC**	**AC ton**
Leveling	100	5.0%	5
12.5 OGFC		5.0%	0
12.5 mm	1700	5.0%	85
9.5 mm SP		5.0%	0
25 mm SP	5700	5.0%	285
19 mm SP	2300	5.0%	115
	9800		**490**

BITUMINOUS TACK COAT

Price Adjustment (PA)			**$**	**3,482.12**	**$**	**3,482.12**
Monthly Asphalt Cement Price month placed (APM)	Max. Cap	60%	$	900.80		
Monthly Asphalt Cement Price month project let (APL)			$	563.00		
Total Monthly Tonnage of asphalt cement (TMT)				10.30824221		

Bitum Tack Gals	gals/ton	tons
2400	232.8234	10.3082422

PROJ. NO.	0010412	CALL NO.	
P.I. NO.	0010412		
DATE	4/8/2013		

BITUMINOUS TACK COAT (surface treatment)

Price Adjustment (PA)				**0**	**$ -**
Monthly Asphalt Cement Price month placed (APM)	Max. Cap	60%	$	900.80	
Monthly Asphalt Cement Price month project let (APL)			$	563.00	
Total Monthly Tonnage of asphalt cement (TMT)				0	

Bitum Tack	SY	Gals/SY	Gals	gals/ton	tons
Single Surf. Trmt.		0.20	0	232.8234	0
Double Surf.Trmt.		0.44	0	232.8234	0
Triple Surf. Trmt		0.71	0	232.8234	0
					0

TOTAL LIQUID AC ADJUSTMENT	**$**	**169,004.12**

GEORGIA DEPARTMENT OF TRANSPORTATION
PRELIMINARY ROW COST ESTIMATE SUMMARY

Date: 10/16/2013 Project: 0010412
Revised: County: Jones
PI: 0010412

Description: S.R. 49 @ Norfolk Southern
Project Termini: S.R. 49 @ Norfolk Southern

Existing ROW: Varies
Parcels: 9 Required ROW: Varies

Land and Improvements		$422,250.00
Proximity Damage	*$4,500.00*	
Consequential Damage	*$0.00*	
Cost to Cures	*$0.00*	
Trade Fixtures	*$0.00*	
Improvements	*$170,000.00*	
Valuation Services		$12,500.00
Legal Services		$81,075.00
Relocation		$33,000.00
Demolition		$25,000.00
Administrative		$80,500.00
TOTAL ESTIMATED COSTS		$654,325.00
TOTAL ESTIMATED COSTS (ROUNDED)		***$655,000.00***

Preparation Credits	Hours	Signature

Prepared By: Lashone Alexander CG#: 286999 10/16/2013 (DATE)
Approved By: Lashone Alexander CG#: 286999 10/16/2013 (DATE)

NOTE: No Market Appreciation is included in this Preliminary Cost Estimate

allsop

DEPARTMENT OF TRANSPORTATION
STATE OF GEORGIA

INTERDEPARTMENT CORRESPONDENCE

FILE **N/A, Jones County, P.I. # 0010412**
SR 49 @ Norfolk-Southern RR, 8.5 mi S of Gray

OFFICE Thomaston

DATE August 15, 2013

FROM Kerry Gore, District Utilities Engineer

TO Adam Smith, Project Manager

SUBJECT **PRELIMINARY UTILITY COST (ESTIMATE)**

As requested by your office, we are furnishing you with a Preliminary Utility Cost estimate for each utility with facilities potentially located within the project limits.

FACILITY OWNER	NON-REIMBURSABLE	REIMBURSABLE
Atlanta Gas Light	167,000	
BellSouth d/b/a AT&T	20,000	60,000
Cox Communications	36,386	
Georgia Power (distribution)		100,000
Jones County Water	90,000	
Southern Natural Gas	492,014	
Windstream	13,824	
TOTALS	**$ 819,224**	**$ 160,000**

Total Preliminary Utility Cost Estimate **979,224**.

If you have any questions, please contact Tyler Peek at 706-646-7605.

KG/TP

cc: Mike Bolden, State Utilities Engineer *(via: e-mail)*
Angela Robinson, Office of Financial Management *(via: e-mail)*
Kraig Collins, Area Engineer *(via: e-mail)*

DEPARTMENT OF TRANSPORTATION
STATE OF GEORGIA

INTERDEPARTMENT CORRESPONDENCE

FILE P.I. No. 0010412, Jones County

OFFICE Environmental Services

DATE December 4, 2013

Glenn Bowman/lw

FROM Glenn Bowman, P.E., State Environmental Administrator

TO Adam Smith, Project Manager

SUBJECT Preliminary Mitigation Cost Estimate

As requested by your office, we are furnishing you with a preliminary cost estimate for the subject project. This project will construct a new bridge crossing on SR 49 over the Norfolk Southern Railroad approximately 8.5 miles south of Gray, Georgia. After reviewing the information provided and comparing that to NWI mapping and soil mapping, the proposed project would not impact any waters of the U.S. Therefore no mitigation would be required.

DISCLAIMER: This information is based solely on a desktop review of the information available. Only after a field reconnaissance, can a more detailed and accurate cost be estimated.

If you have any questions or need additional information, please contact Lisa Westberry (404) 631-1772 of our office.

GB/HDC/lmw

cc: Joshua Waddell
General File

DEPARTMENT OF TRANSPORTATION
STATE OF GEORGIA

INTERDEPARTMENT CORRESPONDENCE

FILE: **PI #0010412, Jones County** **OFFICE: State Utilities Office**

FROM: Jill L Franks for: Michael J. Bolden, State Utility Engineer **DATE: September 20, 2013**

TO: Genetha Rice-Singleton, State Program Delivery Engineer
Attn: Adam Smith, Project Manager

SUBJECT: **PRELIMINARY RAILROAD COST FOR SURFACE WORK (CONCEPT ESTIMATE)**

A review of railroads located within the project limits on the above referenced project has been conducted based on the proposed concept report provided. Listed below is a breakdown of the estimated railroad costs:

FACILITY OWNER	NON-REIMBURSABLE	REIMBURSABLE
NS & CSX – PE for bridge over railroad	**$0.00**	**$54,000.00**
NS & CSX – CE for bridge over railroad	**$0.00**	**$97,000.00**
Total Reimbursement Cost:	**$0.00**	**$151,000.00**

Total railroad surface work reimbursable cost for the above project is estimated to be:
$151,000.00.

Please note that this amount does not include other reimbursable utility and railroad warning device costs that may be associated with this project. Please keep the railroad costs separate from other utilities in your designer's cost estimate.

If you have any questions, please contact Jill Franks, (404) 631-1370, jfranks@dot.ga.gov.

MJB:jlf

cc: Jun Birnkammer, State Utilities Preconstruction Engineer
Angela Robinson, State Financial Management Administrator
Kerry Gore, District 3 Utilities Engineer

NO BUILD = BUILD
Department of Transportation
State of Georgia

INTERDEPARTMENT CORRESPONDENCE

FILE Jones County
P.I. # 0010412

OFFICE Planning

DATE April 11, 2013

FROM Cynthia L. VanDyke, State Transportation Planning Administrator

TO Genetha Rice-Singleton, State Program Delivery Engineer
Attention: Adam Smith

SUBJECT **Traffic Assignments** for SR 49 @ NORFOLK SOUTHERN RR 8.5 MI S OF GRAY.

We are furnishing estimated Traffic Assignments for the above project as follows:

2013 AADT	10400
2018 AADT	11500
2038 AADT	15450
2013 DHV	1100
2018 DHV	1215
2038 DHV	1635
D	60%
K	10.5%
T	7%
S.U.	4.5%
COMB.	2.5%
24 HR. T.	10%
S.U.	5%
COMB.	5%

If you have any questions concerning this information please contact Rhonda Niles at (404) 631-1924.

CLV/RFN

Traffic Projections/Forecasting Summary Sheet

P.I. # 0010412

Jones County

CS 49 @ NORFOLK SOUTHERN RR 8.5 MI S OF GRAY

Year the counts were taken 2013

Growth Factors

Build	**No Build**
Growth for Build	***Growth for No Build***
Existing Year to Base Year 2%	Existing to Base Year 2%
Base Year to Design Year 1.5%	Base to Design Year 1.5%
K = 10.5%	K = 10.5%
D = 60%	D = 60%

Assumptions

- Looked at 10 year trend and census data for growth rates.

Rhonda Niles
4/2013

Jones 0010412 Crash Summaries

Accident No. 0902-1052

Date and Time: 02/11/2009 5:16 pm

Description: The driver of a single-unit vehicle traveling southbound on SR 49 and turning left at E. Chapman Rd pulled into the path of and struck a single-unit vehicle traveling northbound on SR 49.

Accident No. 1112-10858

Date and Time: 12/23/2011 1215 pm

Description: A single-unit vehicle traveling southbound on SR 49 at its intersection with Chapman Road was hit by a deer on the passenger side.

Accident No. 1304-2523

Date and Time: 04/01/2013 7:11 pm

Description: The driver of a single-unit vehicle going northbound on SR 49 and making a right turn onto E. Chapman Road changed course to go west on Chapman Road and struck a northbound vehicle on SR 49 in the back passenger side door and wheel.

Processed Date:6/12/2013

Parameters: Bridge Serial Num

Bridge Inventory Data Listing

Structure ID:169-0016-0 **Jones** **SUFF. RATING:** 51.57

Location & Geography

Structure ID:	169-0016-0
200 Brdge Information:	06
*6A Feature Int:	NS RAILROAD
*6B Critical Bridge:	0
*7A Route No Carried:	SR00049
*7B Facility Carried:	SR 49
9 Location:	8.5 MI S OF GRAY
2 Dot District:	3
207 Year Photo:	2012
*91 Inspection Frequency:	24 Date: 02/01/2012
92A Fract Crit Insp Freq:	0 Date: 02/01/1901
92B Underwater Insp Freq:	0 Date: 02/01/1901
92C Other Spc. Insp Freq:	0 Date: 02/01/1901
* 4 Place Code:	00000
*5 Inventory Route(O/U):	1
Type:	3
Designation:	1
Number:	00049
Direction:	0
*16 Latitude:	32 - 53.1475 HMMS Prefix:SR
*17 Longtitude:	83 -32.4217 HMMS Suffix:00 MP:1.48
98 Border Bridge:	000%Shared:00
99 ID Number:	000000000000000
*100 STRAHNET:	2
12 Base Highway Network:	1
13A LRS Inventory Route:	1691004900
13B Sub Inventory Route:	2
101 parellel Structure:	N
*102 Direction of Traffic:	2
*264 Road Inventory Mile Post:	002.80
*208 Inspection Area:	3 Initials: EFP
Engineer's Initials:	sgm
* Location ID No:	169-00049D-001.48N

*104 Highway System:	1
*26 Functional Classification:	06
*204 Federal Route Type:	F No: 00891
105 Federal Lands Highway:	0
*110 Truck Route:	0
2006 School Bus Route:	1
217 Benchmark Elevation:	0282.00
218 Datum:	2
*19 Bypass Length:	04
*20 Toll:	3
*21 Maintanance:	01
*22 Owner:	01
*31 Design Load:	5
37 Historical Significance:	5
205 Congressional District:	08
27 Year Constructed:	1960
106 Year Reconsrtucted:	0000
33 Bridge Medium:	0
34 Skew:	35
35 Structure Flared:	0
38 Navigation Control:	N
213 Special Steel Design:	0
267 Type of Paint:	2
*42 Type of Service On:	1
Type of Service Under:	2
214 Movable Bridge:	0
203 Type Bridge:	A
259 Pile Encasement	3
*43 Structure Type Main:	3 02
45 No.Spans Main:	006
44 Structure Type Appr:	0 00
46 No Spans Appr:	0000
226 Bridge Curve Horz	0 Vert: 1
111 pier Protection	0
107 Deck Structure Type:	1
108 Wearing Structure Type:	1
Membrane Type:	8
Deck Protection:	8

Signs & Attachments

225 Expansion Joint Type:	02
242 Deck Drains:	1
243 Parapet Location:	0
Height:	0
Width:	0
238 Curb Height:	1
Curb Material:	1
239 Handrail	1 1
*240 Medium Barrier Rail:	0
241 Bridge Median Height:	0
* Bridge Median Width:	0
230 Guardrail Loc. Dir. Rear:	3
Fwrd:	3
Oppo. Dir. Rear:	0
Oppo. Fwrd:	0
244 Aproach Slab	3
224 Retaining Wall:	0
233Posted Speed Limit:	55
236 Warning Sign:	0.00
234 Delineator:	1.00
235 Hazzard Boards:	1
237 Utilities Gas:	00
Water:	00
Electric:	00
Telephone:	22
Sewer:	00
247 Lighting Street:	0
Navigation:	0
Aerial:	0
*248 County Continuity No.:	00

"The Information contained in this File/Report is the property of GDOT and may not be released to any other party without the written consent of the Data Custodian. Please dispose of this information by shredding or other confidential method."

Bridge Inventory Data Listing

Structure ID:169-0016-0

Programming Data

201 Project No:	FFG-089-1 (2)
202 Plans Available:	4
249 Prop Proj No:	0010412
250 Approval Status:	0000
251 PI Number:	0010412
252 Contract Date:	02/01/1901
260 Seismic No:	00000
75 Type Work:	34 1
94 Bridge Imp: Cost:	$1,196
95 Roadway Imp. Cost:	120
96 Total Imp Cost:	1793
76 Imp Length:	001626
97 Imp Year:	2013
114Furure ADT:	014145 Year:2030

Hydralic Data

215Waterway Data:	
High Water Elev:	0000.0 Year:1900
Flood Elev:	0000.0 Freq:00
Avg Streambed Elev:	0000.0
Drainage Area:	00000
Area of Opening:	000000
113 Scour Critical	N
216Water Depth:	00.0 Br.Height:00.0
222Slope Protection:	0
221Slope Protection	0 Fwd:0
219Fender System	0
220Dolphin:	0
223Current Cover:	000
Type:	0
No. Barrels:	0
* Width:	0.00 Height:0.00
* Length:	0 Apron:0
265 U/W Insp. Area	0 Diver:ZZZ
Location ID No:	169-00049D-001.48N

Measurements:

*29ADT	009430 Year:2010
109%Trucks:	15
* 28 Lanes On:	02 Under:00
210 No. Tracks On:	00 Under:01
* 48 Max. Span Length	0053
* 49 Structure Length:	306
51 Br. Rwdy. Width	28.00
52 Deck Width:	34.30
* 47 Tot. Horiz. Cl:	28
50 Curb / Sidewalk Width	2.00 / 2.00
32 Approach Rdwy. Width	030
*229 Shoulder Width:	
Rear Lt:	3.00 Type:2 Rt:2.70
Fwd. Lt:	3.00 Type:2 Rt:2.70
Permanent Width:	
Rear:	24.00 Type:2
	24.00 Type:2
Intersaction Rear:	1 Fwd: 1
36Safety Features Br. Rail:	2
Transition:	2
App. G. Rail:	2
App. Rail End:	2
53 Minimum Cl. Over:	99' 99 "
Under:	
*228 Minimum Vertical Cl	
Act. Odm Dir::	99' 99"
Oppo. Dir:	99' 99"
Posted Odm. Dir:	00' 00"
Oppo. Dir:	00' 00"
55 Lateral Undercl. Rt:	R 12 12
56 Lateral Undercl. Lt:	0.00
*10 Max Min Vert Cl:	99' 99" Dir:0
39 Nav Vert Cl:	000 Horiz:0000
116 Nav Vert Cl Closed:	000
245 Deck Thickness Main	7.00
Deck Thick Approach:	0.00
246 Overlay Thickness:	0.00
212 Year Last Painted:	Sup:1989Sub:0000

65 Inventory Rating Mathod:	1
63 Operating Rating Method:	1
66 Inventory Type:	2 Rating: 28
64 Operating Type:	2 Rating: 28
231Calculated Loads:	
H-Modified:	21 0
HS-Modified:	29 0
Type 3:	27 0
Type 3s2:	36 0
Timber:	32 0
Piggyback:	40 0
261 H Inventory Rating:	25
262 H Operating Rating	43
67 Structural Evaluation:	5
58 Deck Condition:	4
59 Superstructure Condition:	6
* 227 Collision Damage:	0
60A Substructure Condition:	5
60B Scour Condition:	N
60C Underwater Condition	N
71 Waterway Adequacy:	N
61 Channel Protection Cond.:	N
68 Deck Geometry:	4
69 UnderClr. Horz/Vert:	5
72 Appr. Alignment:	8
62 Culvert:	N

Posting Data

70 Bridge Posting Required	5
41 Struct Open, Posted, CL:	A
* 103 Temporary Structure:	0
232 Posted Loads	
H-Modified:	00
HS-Modified:	00
Type 3:	00
Type 3s2:	00
Timber:	00
Piggyback	00
253 Notification Date:	02/01/1901
258 Fed Notify Date:	2/1/1901 12:00:00AM

"The Information contained in this File/Report is the property of GDOT and may not be released to any other party without the written consent of the Data Custodian. Please dispose of this information by shredding or other confidential method."

Flexible Pavement Design Analysis

PI Number	0010412	**County(s)**	Jones
Project Number	0010412	**Design Name**	SR 49 Full Depth Pavement
Project Description	SR 49 Bridge Replacement over Norfolk Southern Railroad 8.5 miles South of Gray		

Traffic Data (AADTs are one-way)						**Miscellaneous Data**	
Initial Design Year	2018	**Initial AADT, VPD**	5,750	**24 Hour Truck %**	10.00	**Lanes in one direction**	1
Final Design Year	2038	**Final AADT, VPD**	7,725	**SU Truck %**	5.00	**Curb & Gutter/Barrier**	No
		Mean AADT, VPD	6,738	**MU Truck %**	5.00		

Design Data					
Lane Distribution Factor (%)	100.00	**Soil Support Value**	2.50	**Single Unit ESAL**	0.40
Terminal Serviceability Index	2.50	**Regional Factor**	1.60	**Multiple Unit ESAL**	1.50
		User Defined 18-KIP ESAL	0.00	**Calculated 18-KIP ESAL**	0.95
Non-Standard Value Comment					

Design Loading (Calculated 18-KIP ESAL)					
Mean AADT, VPD	**LDF (%)**	**Vehicle Type**	**Volume (%)**	**ESAL Factor**	**Daily ESAL**
6,738	100.00	Single Unit Truck	5.00	0.40	135
		Multi Unit Truck	5.00	1.50	506
				Total Daily ESALs	641
				Total Design Period ESALs	4,679,300

Proposed Flexible Full Depth Pavement Structure				
Course	**Material**	**Thickness (inches)**	**Structural Coefficient**	**Structural Value**
Course 1	12.5 mm Superpave	1.50	0.4400	0.66
Course 2	19 mm Superpave	2.00	0.4400	0.88
Course 3	25 mm Superpave	1.00	0.4400	0.44
		4.00	0.3000	1.20
Course 4	Graded Aggregate Base	12.00	0.1600	1.92

Required SN	5.65	**Proposed pavement is 9.74% Underdesigned**	**Proposed SN**	5.10

Design Remarks	

Prepared By 6/5/2013 1:32 PM

William Boyd, Design Engineer 3 **Date**

Recommended By

District Engineer **Date**

Approved By

State Pavement Engineer **Date**

Filename: C:\Documents and Settings\wboyd\Desktop\0010412 Pavement Design.xlsm

GDOT Pavement Design Tool - Version 1.0 August 21, 2012

Concept Team Meeting Minutes

Jones 0010412, SR49 @ Norfolk Southern Railroad
September 18, 2013
Thomaston District Office – 9:00a.m.

Name	Organization	Email
Jason Mobley	GDOT – D3 Design	jmobley@dot.ga.gov
Joshua Waddell	GDOT – D3 Design	jowaddell@dot.ga.gov
William Boyd	GDOT – D3 Design	wboyd@dot.ga.gov
Greg Smith	GDOT – D3 Location	grsmith@dot.ga.gov
Tyler Peek	GDOT – D3 Utilities	tpeek@dot.ga.gov
Jeremy Daniel	GDOT – Engineering Services	jedaniel@dot.ga.gov
Bob Rychel	Middle Georgia Regional Commission	rrychel@mg-rc.org
Bob O'Rourke	GDOT – D3 Right of Way	borourke@dot.ga.gov
Daylon Martin	Jones County	daylon.martin@jonescountyga.org
Kraig Collins	GDOT – D3 Construction	krcollins@dot.ga.gov
Michael Presley	GDOT – D3 Traffic Operations	mpresley@dot.ga.gov
Ken Robinson	GDOT – D3 Construction	krobinson@dot.ga.gov
Thomas Howell	GDOT – D3 District Engineer	thowell@dot.ga.gov
Adam Smith*	GDOT – Program Delivery	adsmith@dot.ga.gov
Leisa Jones*	GDOT – Utilities	leijones@dot.ga.gov
Jill Franks*	GDOT – Utilities/Railroad	jfranks@dot.ga.gov
Lyn Clements*	GDOT – Bridge Design	lclements@dot.ga.gov
Iris Hernandez*	GDOT – Environmental Services	ihernandez@dot.ga.gov
Cathy Pollard	GDOT – D3 Design	cpollard@dot.ga.gov
Kerry Gore	GDOT – D3 Utilities	kgore@dot.ga.gov

**Via video conference*

- Adam Smith called the meeting to order and asked everyone to introduce themselves.
- Jason Mobley provided an overview of the project and layout. He noted a few items outstanding in the design data table.
- Tyler Peek reported from Utilities.
    - He listed the utility owners.
    - He stated that AT&T had facilities attached to the existing bridge and that they would coordinate with Bridge Design and Norfolk Southern to attach facilities to the proposed bridge.
    - He stated that Southern Natural Gas had a line at the northern end of the project and recommended avoiding working and purchasing right of way in the area due to the expense of upgrading the line.
    - He recommended avoiding purchasing right of way near a pump house in the northwest quadrant.
    - He stated that Bell South had a slick site on the east side of the project and that there was a back-flow preventer on that side as well.
    - He stated SUE would be performed on the project.
    - He stated that the utility cost estimate had been provided and should be included in the concept report.
    - He mentioned lights near Mattie Wells drive could be in conflict.
    - Kerry Gore mentioned that a concept utility report had been provided and should be attached to the concept report.
- Jason Mobley described an access concern with a road under the existing bridge servicing several residences. The road appeared to cross Norfolk Southern right of way, but it was

unclear if an agreement was in place for the access. Adam Smith stated that deed research was taking place. Commissioner Martin stated that it looked like a private road.

- Iris Hernandez reported from Environmental Services.
    - She stated that a Categorical Exclusion would be required.
    - She stated that a 404 permit could be required if streams were impacted. Jason Mobley stated that there was water flowing off the western project limits across Chapman Road and that it might be designated as a stream. He also mentioned that it would probably need to be relocated with the project.
    - Iris stated that public involvement would not be required if the school was not impacted. Commissioner Martin requested that a public meeting be considered due to the high interest in the corridor. Adam Smith stated that a public meeting would be held.
    - Jason Mobley requested information to complete the remaining environmental sections of the concept report. Adam Smith reported that task orders were being obtained for this environmental work.
- Jason Mobley stated that MS4 would require an enhanced swale. He stated this would be shown on the typical sections and described in the appropriate section of the concept report.
- Commissioner Martin stated that the pallet mill would be a major stakeholder. He also mentioned the Wells family was highly interested in the impacts to Chapman Road.
- Commissioner Martin requested a barrier be considered on the bridge between the travel lanes and the sidewalk. Lyn Clements stated that this was not desirable due to constructability concerns. Jason Mobley stated that this would be investigated further and that a detailed response would be provided.

Keith Posey emailed the following comments on behalf of the Office of Design Policy and Support:

Concerning the report:

- Signature Page – needs Bridge Design Engineer & District Engineer signature lines.
- Functional Classification (page 3) – changes at the RR. Urban Principal Arterial SW, Rural Minor Arterial NE. Recommend listing the Functional Classification of Chapman Road, since part of it is being relocated and design data is listed in the report.
- Design & Structural Data for SR 49 (page 4): According to attached typical section, wouldn't the proposed shoulder vary from 10' – 0" to 18' – 6"?
- MS4 (page 7) marked yes and the attachment section of the report says MS4 calculations are attached. Recommend stating the calculations are attached in this section as well.
- Project Cost Estimate and Funding Responsibilities table (page 9) – GDOT Project Financial Report and Preconstruction Status Report show $295,000 of PE was Authorized on 4/9/2012. Make sure all costs and estimate dates in table match the attached cost estimates.
- Alternatives Discussion (page 10) – Include the cost information (ROW Cost and Total Cost) for the alternatives.
- Attachments (page 10-11) – make sure this section matches what is attached to the report.

Concerning the attachments:

- Concept Layout appears to be 24" x 36". Recommend resizing this to 11"x17" in the adobe pdf file.
- Attached approved ROW and Utility cost estimates
- Attached documents should match the Attachments section listing in the report.

Scoping Meeting Minutes
0010412 Jones, 0010414 Meriwether, & 0010415 Pulaski
July 14, 2011 10:30 a.m.

Attendees

- Sue Anne Decker, GDOT Project Manager
- Ben Rabun, GDOT Bridge Office
- Andy Casey, GDOT Roadway Design
- Dave Peters, GDOT Design Policy and Support
- Michael Murdoch, GDOT Office of Environmental Services
- Jason Mobley, GDOT District 3 Design
- Greg Smith, GDOT District 3 Location
- Bill DuVall, GDOT Bridge Office

Sue Anne opened the meeting and brought layouts for the team to look at. Introductions were made.

0010415 Pulaski

- (Ben Rabun) – This project needs to be deleted. This work is included in 0007050 Pulaski. (Managed by Clinton Ford.)

0010412 Jones

- Bridge Information - This road has approximately 10,000 vpd. The bypass length is 4 miles. This road services lots of local traffic (residential). A nearby quarry has worn out the bridge deck. There is an unpaved access road underneath the bridge as well as the RR.
    - Is Jones County part of the Macon MPO?
    - Will this roadway be widened in the next 75 years?
        - If it will, then we could build a parallel bridge and remove the kink in the roadway when it is widened. If not, we should consider another alternative.
- Alternates Discussed
    - Off-site Detour
    - Parallel Bridge
        - Approximate cost = $500,000.00 plus staging
    - On-site Detour
    - Staged construction
- Bridge Closure
    - The bridge would be close about a year for construction.
- Utilities
    - There is one utility attached to the bridge.
- Funding
    - PE cannot be authorized until the STIP is approved, which may be in September this year.
- GDOT's In-house availability
    - D3 Location can easily take this on. They normally provide 1000' on each side of the bridge and 300' to 500' long the RR track, which includes DTM and top of rail.
    - Andy's staff has availability to do this work.
        - D3 may do the design.
        - Dave Peters' group will do the concept report.
    - Ben's staff has availability to do this work.

0010414 Meriwether

- Bridge Information - This road has approximately 4,000 vpd. The bypass length is 6 miles.
- Alternates Discussed
  - Off-site Detour – recommended by the Bridge Office
  - On-site Detour
- Environmental
  - Please verify that the detour route can hold the traffic. This will help with the comments from FHWA.
  - If programmatic approval is given, the environmental document can be accelerated by showing that impacts were minimized.
  - We could not get a PCE with an off-site detour. However, all we need is to do is hold a detour meeting.
- Hydraulics
  - Bridge and Roadway need to coordinate on the hydraulic information.
  - Location is aware that there is a dam and a bridge upstream. They will provide hydraulic information up to the dam.
- Funding
  - PE cannot be authorized until the STIP is approved, which may be in September this year.
- GDOT's In-house availability
  - D3 Location can easily take this on.
  - Andy's staff has availability to do this work.
    - D3 may do the design.
    - Dave Peters' group will do the concept report.
  - Ben's staff has availability to do this work.

Action Items

- GDOT PM
  - 0010415 Pulaski
    - Request to delete project from the Construction Work Program.
  - 0010412 Jones
    - Contact RR about plans for a second track and where they want it, and the number of trains per day on the track.
    - Send request to Andy Casey for design and concept work.
    - Send request to Ken Thompson for survey.
    - Submit 1625 for PE once the STIP is approved.
  - 0010414 Meriwether
    - Coordinate hydraulics with road and bridge offices.
    - Send request to Andy Casey for design and concept work.
    - Send request to Ken Thompson for survey.
    - Submit 1625 for PE once the STIP is approved.

Keith Golden, P.E., Commissioner

GEORGIA DEPARTMENT OF TRANSPORTATION

One Georgia Center, 600 West Peachtree Street, NW
Atlanta, Georgia 30308
Telephone: (404) 631-1000

January 15, 2014

J. Preston Hawkins, Chairman
Jones County Board of Commissioners
P. O. Box 1359
Government Center, Industrial Boulevard
Gray, GA 31032

RE: Pedestrian Accommodation Options, SR49 over Norfolk Southern Railroad, GDOT PI No. 0010412

Dear Chairman Hawkins:

Our current design for this bridge replacement accommodates pedestrians with a sidewalk eight (8) feet from the travel lanes. At meetings on May 21, 2013 and September 18, 2013, you requested we consider a barrier to separate and protect pedestrians from vehicles.

Our current design meets state and federal guidelines, so there is an expectation of safety for all users. However, if Jones County is interested in providing additional separation between the travelling public and pedestrians, this could best be provided by a pedestrian bridge adjacent to the roadway bridge.

If Jones County is interested in funding the design and construction of a separate pedestrian bridge, the Department is willing to consider issuing an encroachment permit to allow Jones County to construct a pedestrian bridge adjacent to the proposed roadway bridge within the GDOT right of way.

Should you have any questions in this matter, please do not hesitate to contact Adam Smith, Project Manager, at (706) 621-9704.

Sincerely,

Genetha Rice-Singleton
State Program Delivery Engineer

GRS:BWS:ags

C: Russell McMurry, Chief Engineer
Thomas Howell, District Engineer
Daniel Pass, District Preconstruction Engineer

From:	Jackson, Ernest L
To:	Franks, Jill L.
Cc:	Chandler, Raymond; George Zimmerman (George.Zimmerman@stvinc.com)
Subject:	RE: Request for FUTURE TRACT REQUIREMENTS for PI 0010412, Jones County
Date:	Wednesday, March 13, 2013 12:38:54 PM
Attachments:	image003.jpg

Jill,

One additional track to the west of the existing track will be sufficient for this line classified as "Tactical."

E. Leon Jackson
Engineer Public Improvements

AL, FL, GA, LA, MS, & SC
(404) 529-1251

From: Franks, Jill L. [mailto:jfranks@dot.ga.gov]
Sent: Friday, March 08, 2013 11:42 AM
To: Jackson, Ernest L
Cc: Chandler, Raymond; George Zimmerman (George.Zimmerman@stvinc.com)
Subject: Request for FUTURE TRACT REQUIREMENTS for PI 0010412, Jones County

PI 0010412, Jones County
Near Macon, Georgia
SR 49 @ Norfolk Southern RR, 8.5 Miles South of Gray
FUTURE TRACT REQUIREMENTS

Leon,

Attached is a Concept Drawing in the areas of RR involvement for your information. We would like to request the future track requirements and to which side of the existing you would like the future track(s). I believe the **RR INV No. is 733420E.**

Thanks,

Jill L. Franks, P.E.
Railroad Liaison Engineer
Georgia Department of Transportation
Office of Utilities – One Georgia Center
600 W. Peachtree Street NW, 10th Floor
Atlanta, GA 30308
Phone: (404) 631-1370, Fax: (404) 631-1934
Email: jfranks@dot.ga.gov

Municipal Separate Storm Sewer System (MS4) Evaluation Form

P.I. No.:	**0010412**		
County:	**Jones**		
Description:	**SR49 @ Norfolk Southern RR**		
		Yes	**No**
1. Does the project lie in a Phase I or Phase II MS4 County/Municipality?		x	
2. Does the project lie on a State Route facility?		x	
3. Does Project disturb less than 1 acre?			x
4. Does the project discharge water soley as sheet flow?			x
5. Does the area of impervious surface decrease or remain unchanged?			x
6. Was the environmental document approved prior to June 30, 2012?			x
7. Were the R/W plans approved prior to June 30, 2012?			x

Water Quality: The following preliminary hydrology study indicates approximately 0.6 acre-feet is needed for 80% reduction in total suspended solids (TSS).

Channel Protection: As shown, differences in pre-construction and post-construction flow rates are insignificant (<1cfs). Additional stormwater BMP's are not anticipated.

Overbank Protection: As shown, differences in pre-construction and post-construction flow rates are insignificant (<1cfs). Additional stormwater BMP's are not anticipated.

Extreme Flood Protection: As shown, differences in pre-construction and post-construction flow rates are insignificant (<1cfs). Additional stormwater BMP's are not anticipated.

Description	Symbol	Storm	Pre-developed	Post-developed
Water Quality Volume (acre-feet)	**WQ_V**			**0.575**
Volumetric Runoff Coefficient	R_V			0.23
Percent Impervious Cover (percent)	I		18	20
Area (acres)	A		25	25
Impervious Area (acres)			4.5	5
Cover Description	CN			
woods, good cover	55		17%	16%
open space	61		32%	31%
Impervious	98		18.00%	20.00%
residential, 1/2 acre	70		33%	33%
Composite Curve Number	CN		69.61	70.41
Rainfall Distribution (Type I, IA, II, or III)			II	II
Time of Concentration (minutes)	T_c		10	10
Time of Concentration (hours)	T_c		0.166666667	0.166666667
24-Hour Rainfall (inches)	P	(1-Year)	3.5	3.5
		(25-Year)	7	7
		(100-Year)	9	9
Initial Abstraction (inches)	I_a		0.857	0.857
I_a/P	I_a/P	(1-Year)	0.244857143	0.244857143
		(25-Year)	0.122428571	0.122428571
		(100-Year)	0.095222222	0.095222222
Unit Peak Discharge (csm/in)	q_u	(1-Year)	800	800
		(25-Year)	850	850
		(100-Year)	860	860
Pond and Swamp Adjustment	F_P		1	1
Potential Maximum Retention after Runoff Begins (inches)	S		4.365752047	4.20252805
Runoff (inches)	Q	(1-Year)	0.986805645	1.030732626
		(25-Year)	3.577595643	3.661386699
		(100-Year)	5.286783825	5.385635645
Area (square miles)	A_m		0.0390625	0.0390625
Peak Discharge (cfs)	q_p	(1-Year)	30.83767642	32.21039457
		(25-Year)	118.7873553	121.5694803
		(100-Year)	177.6028941	180.9236975
Detention Time (usually 24 hours)	T		24	24
Ratio of Peak Outflow to Peak Inflow	q_o/q_i	(1-Year)	0.025	0.025
		(25-Year)	0.022	0.021
		(100-Year)	0.02	0.02
Ratio of Required Storage Volume to Runoff Volume	V_S/V_R	(1-Year)	0.647262438	0.647262438
		(25-Year)	0.651325199	0.652685794
		(100-Year)	0.654049568	0.654049568
Runoff (inches)	$V_R = Q$	(1-Year)	0.986805645	1.030732626
		(25-Year)	3.577595643	3.661386699
		(100-Year)	5.286783825	5.385635645
Channel Protection Storage (acre-feet)	**$Cp_v = V_S$**	**(1-Year)**	**1.330671307**	**1.389905233**
		(25-Year)	4.854537905	4.978614762
		(100-Year)	7.20378891	7.338484723
Peak Inflow Rate (cfs) = Peak Discharge (cfs)	$Q_{in} = q_p$	(1-Year)	30.83767642	32.21039457
		(25-Year)	118.7873553	121.5694803
		(100-Year)	177.6028941	180.9236975
Allowable Outflow Rate = Pre-developed Peak Flow (cfs)	$Q_{out} = q_p$	(1-Year)		30.83767642
		(25-Year)		118.7873553
		(100-Year)		177.6028941
Total Runoff Volume (acre-feet)	V_R	(1-Year)		2.147359638
		(25-Year)		7.627888957
		(100-Year)		11.22007426
Ratio of Allowable Outflow Rate to Peak Inflow Rate	Q_{out}/Q_{in}	(1-Year)		0.957382759
		(25-Year)		0.97711494
		(100-Year)		0.981645283
Ratio of Required Storage Volume to Allowable Runoff Volume	V_S/V_R	(1-Year)		0.1
		(25-Year)		0.1
		(100-Year)		0.1
Required Overbank Protection Volume (acre-feet)	**Q_p**	(1-Year)		0.214735964
		(25-Year)		**0.762788896**
		(100-Year)		**1.122007426**

Original Version: May 24, 2013

Concept Utility Report

Project Number: N/A

District: 3

County: Jones

Prepared by: Tyler Peek

P.I. # 0010412

Date: September 18, 2013

Project Description: Bridge Replacement - SR 49 @ Norfolk-Southern RR, 8.5. miles S of Gray

The information provided herein has been gathered from Georgia811and/or field visits and serves as an estimate. Nothing contained in this report is to be used as a substitute for 1st Submission or SUE.

Are SUE services recommended? Yes Level: ☐ A ☒ B ☐ C ☐ D

Public Interest Determination (PID): ☐ Automatic ☐ Mandatory ☐ Consideration ☒ No Use ☐ Exempt

Is a separate utility funding phase recommended? No

Existing Facilities: AGL, BellSouth, Cox Communications, Georgia Power (distribution), Jones County Water, Southern Natural Gas, Windstream

Potential Project (Schedule/Budget) Impacts:

- Southern Natural Gas pipeline that crosses SR 49 at the northern terminus of the project. Depending on the proposed profile, cross section, and earthwork at this location, a relocation of the pipeline may be required. We advise avoiding additional R/W in this area. This would be a substantial reimbursable cost if impacted.
- BellSouth has a SLIC site that is approximately 100' from the EOP along SR 49 (Right) - preferred alignment would avoid this conflict.
- Jones County Water has a backflow preventer that is approximately 100' from the EOP along SR 49 (Right) - preferred alignment would avoid this conflict. Jones County Water also has a pumphouse that is located just off existing R/W along SR 49 (Left) north of Kent Rd - we advise avoiding additional R/W in this area. This would be a substantial reimbursbale cost if impacted.

Capital Improvement Projects (Utilities) Anticipated in the Area: _____

Project Specific Recommendations for Avoidance/Mitigation: Shorten the northern project limits or reduce earthwork required so as to avoid impacts to the gas pipeline and pumphouse.

Right of Way Coordination:

- Ensure that easements are purchased with the right to place utilities.
- Avoid purchase of R/W where gas pipeline crosses SR 49. This would cause pipeline that may not be in conflict to be cased within additional R/W limits.
- Avoid purchase of R/W in vicinity of pumphouse along SR 49.

Environmental Coordination: Ensure that environmental studies factor in relocation of utilities. ESAs within the required R/W may be subject to placement of utilities.

Additional Remarks:

- BellSouth has conduit attached to the existing bridge and will be requesting to attach to the new bridge. This will be coordinated with Bridge Design; however BellSouth will be responsible for obtaining a permit from the RR for attachment to the new bridge.
- There are three lights along SR 49 (right) near Mattie Wells Drive - one is for the self-storage unit, the other two are on either side of Mattie Wells Drive at its intersection with SR 49. We are unsure of the ownership of these lights.

The following utilities have facilities within the project limits. Utilities have been located using Georgia811 and/or field visits.

Existing Facilties/Appurtenances	Approximate Limits (Station/Offset)	Reimbursable cost (est.)	Non-reimbursable cost (est.)	Facilities to Avoid (Station/Offset)	Facility Retention Recommended	Comments
Atlanta Gas Light: 1 1/4", 2", & 4" gas main	SR 49 (Right): extends from south of Mattie Wells Dr to north of Mattie Wells Dr - longitudinal, approx 50' from EOP		**$167,000.00**			
BellSouth: aerial fiber optic (on GPC poles) and underground copper cable, attachment to existing bridge	Entire project	**$60,000.00**	**$20,000.00**	SLIC site along SR 49 (Right) north of recreation complex drive - approx 100' from EOP		Bridge attachment will be coordinated with Bridge Design. Utility responsible for permit with RR for attachment to new bridge.
Cox Communications: aerial on GPC poles	Entire project		**$36,386.00**			
Georgia Power: aerial distribution	Entire project. Most poles approx 30'-40' from EOP	**$100,000.00**		Poles outside existing R/W, especially along county roads		
Jones County Water: water/sewer mains and services, valves, meters, backflow preventer, pumphouse	Entire project		**$90,000.00**	Pumphouse along SR 49 (Left) north of Kent Rd - off existing R/W; backflow preventer along SR 49 (Right) north of recreation complex - approx 100' from EOP		avoid purchase of additional R/W on pumphouse side of SR 49 to avoid substantial relocation costs
Southern Natural Gas: gas pipeline	90° crossing SR 49 between Kent Rd and Mattie Wells Dr		**$492,014.00**	Gas pipeline crossing SR 49 between Kent Rd and Mattie Wells Dr		avoid purchase of additional R/W within easement of pipeline as this could necessitate additional casings
Windstream: aerial on GPC poles	Entire project		**$13,824.00**			

From:	Bowman, Glenn
To:	Simpson, Jim; Smith, Adam
Cc:	Story, Brent; Taylor, Walter; Peters, Dave; Posey, Keith
Subject:	RE: PI 0010412 Jones concept
Date:	Tuesday, May 27, 2014 5:35:24 PM
Attachments:	Scanned from a Xerox multifunction device.pdf

Jim, he approved it as is! I will bring it up to you now. Thanks for the follow through.

His main concern was the detail of the transition area and so I've attached a sketch of what I heard him say would be fine. Mainly it's carrying curb and gutter to beyond the width transition area.

Adam, please ensure this get followed through in design. Thanks!

Glenn Bowman, P.E.
Director of Engineering
Georgia Department of Transportation
600 West Peachtree Street, NW - 25th Floor
Atlanta, Georgia 30308
Office: 404-631-1519 Mobile: 404-326-5871

-----Original Message-----
From: Bowman, Glenn
Sent: Monday, May 26, 2014 10:10 PM
To: Simpson, Jim
Cc: Story, Brent; Taylor, Walter; Peters, Dave; Posey, Keith
Subject: RE: PI 0010412 Jones concept

I believe he does still have the report on his desk.

So it sounds like curbs are no longer prohibited within 12 feet of high speed EOPs. Since the Green Book says, "A flush roadway shoulder should not be interrupted by a raised walkway on a bridge" it makes me think the proposed typical (8' shoulder plus sidewalk) is good enough. Chief may still think different and I will talk to him tomorrow and let you know.

Glenn Bowman, P.E.
Director of Engineering
Georgia Department of Transportation
600 West Peachtree Street, NW - 25th Floor Atlanta, Georgia 30308
Office: 404-631-1519 Mobile: 404-326-5871

-----Original Message-----
From: Simpson, Jim
Sent: Friday, May 23, 2014 2:57 PM
To: Bowman, Glenn
Cc: Story, Brent; Taylor, Walter; Peters, Dave; Posey, Keith
Subject: RE: PI 0010412 Jones concept

Glenn,
Does the Chief still have this concept report? We have not been able to find any definitive guidance on having sidewalk or not on a bridge with a 55 mph speed design. Ideally it would be best to provide barrier separation between traffic and the bike lane and sidewalk, but it adds significant cost and then you have to deal with ending/beginning the barrier terminals and the obstacles they would create themselves. Other than that, separation could be provided by flexible pylons or reflectorized RPM's adjacent to the bike lane, which would then be adjacent to a raised sidewalk with normal curb height. Please let us know if you'd like to discuss further on how to proceed.

Thanks,
Jim Simpson
Assistant State Design Policy Engineer
Georgia Department of Transportation
Office of Design Policy and Support
One Georgia Center, 26th Floor
(404)631-1605 - Office
(404)895-4999 - BlackBerry

----Original Message-----
From: Simpson, Jim
Sent: Thursday, May 08, 2014 9:55 AM
To: Bowman, Glenn
Cc: Peters, Dave; Posey, Keith
Subject: RE: PI 0010412 Jones concept

Hey Glenn,
This area is just outside Macon. Right along SR 49 near the bridge, there are several neighborhoods, parks and schools, so it looks like they were trying to accommodate bicycle and pedestrian traffic from one side of the bridge to the other. There are no such accommodations now on the existing bridge. It is 55 mph, but they are proposing to offset the sidewalk 11.5 feet from the edge of travel lane (rural shoulder, no C&G) on the approaches up to the bridge. Then it transitions onto a raised sidewalk onto the narrower bridge shoulder. On some of the higher speed SRTS projects, we have seen RPM's or rumble strips added to delineate separation between sidewalk and travelway or shoulder, but most of those didn't have much separation (maybe 4' or 5' in some cases) at all since all work has to be done within existing ROW on those projects. Ideally though, with a rural condition like this, we'd want the sidewalk behind the ditch or outside of the clear zone.
Jim Simpson
Assistant State Design Policy Engineer
Georgia Department of Transportation
Office of Design Policy and Support
One Georgia Center, 26th Floor
(404)631-1605 - Office
(404)895-4999 - BlackBerry

-----Original Message-----
From: Bowman, Glenn
Sent: Thursday, May 08, 2014 8:46 AM
To: Simpson, Jim
Subject: FW: PI 0010412 Jones concept

Please look into. I don't understand what he is saying. Why would we or could we even put sidewalk on a bridge with 55 mph speed design? If we are uncomfortable with a flush shoulder shouldn't we go to barrier separated peds and vehicles?

Glenn Bowman, P.E.
Director of Engineering
Georgia Department of Transportation
600 West Peachtree Street, NW - 25th Floor Atlanta, Georgia 30308
Office: 404-631-1519 Mobile: 404-326-5871

-----Original Message-----
From: McMurry, Russell
Sent: Wednesday, May 07, 2014 5:34 PM
To: Bowman, Glenn
Subject: PI 0010412 Jones concept

I just noticed that design speed is 55mph. So disregard previous email.

My question now is where the sidewalk has to be raised across the bridge. Curb and gutter must be

used on either end of bridge somehow. Maybe just add striped delineation and tp 10 RPM's to separate shoulder and side walk location.

Thoughts?

Russell McMurry
Georgia Department of Transportation
Sent from my mobile

The Georgia DOT Teens in the Driver Seat initiative is a peer-to-peer program that educates teens and parents on the dangers of distracted driving, delivers safe driving messages, and helps prevent teens from becoming a statistic. Car crashes are the number one killer of teenagers in America. Almost 6,000 teens die every year in preventable car crashes, which means a teenage driver dies every 15 minutes. Help to drive down these numbers. Visit http://www.t-driver.com/whatyoucando/get-started/gainfo/ to get more information on teen driving; visit us at http://www.dot.ga.gov; or follow us on http://www.facebook.com/GeorgiaDOT and http://twitter.com/gadeptoftrans.

The Georgia DOT Teens in the Driver Seat initiative is a peer-to-peer program that educates teens and parents on the dangers of distracted driving, delivers safe driving messages, and helps prevent teens from becoming a statistic. Car crashes are the number one killer of teenagers in America. Almost 6,000 teens die every year in preventable car crashes, which means a teenage driver dies every 90 minutes. Help to drive down these numbers. Visit http://www.t-driver.com/whatyoucando/get-started/gainfo/ to get more information on teen driving; visit us at http://www.dot.ga.gov; or follow us on http://www.facebook.com/GeorgiaDOT and http://twitter.com/gadeptoftrans.

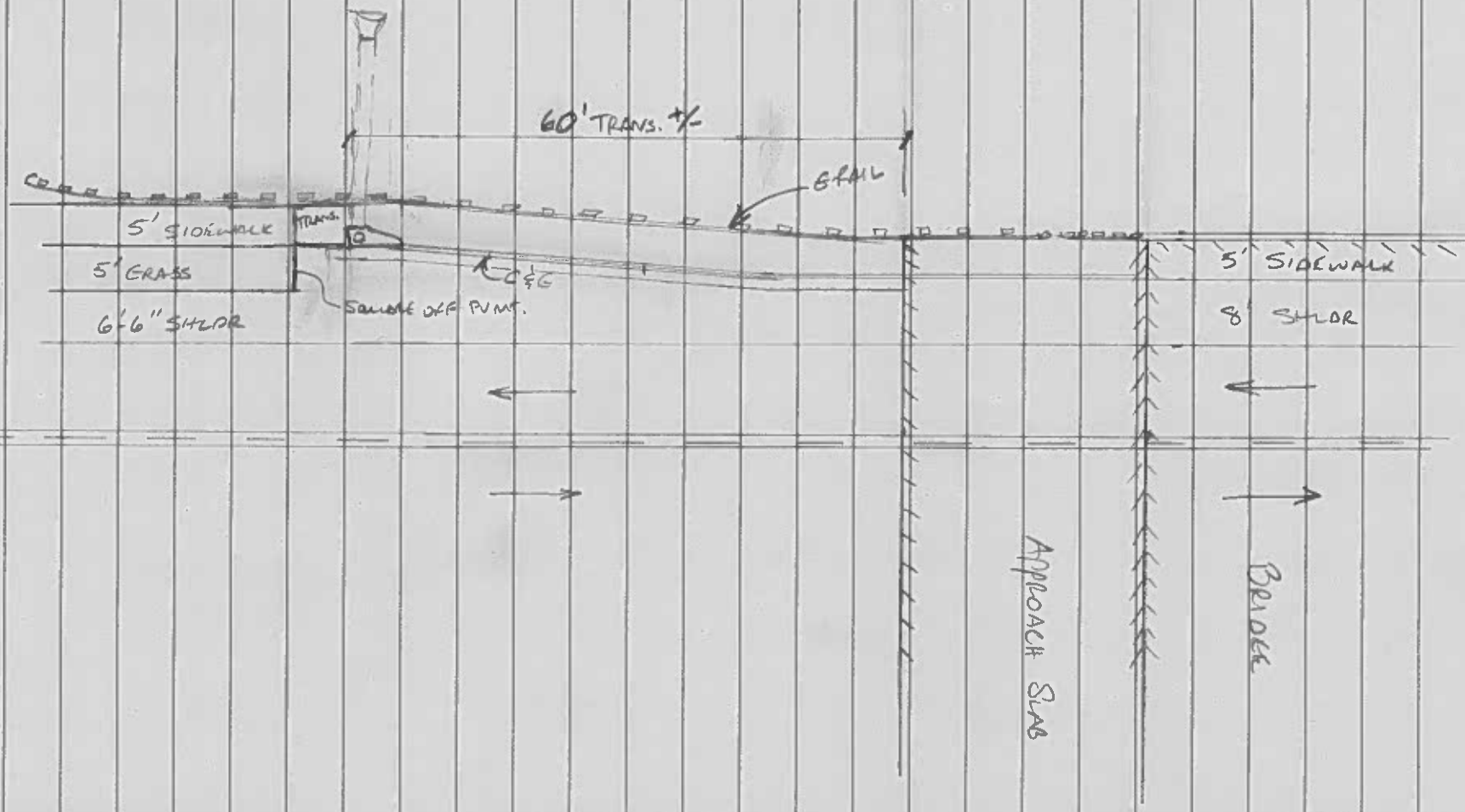
60' TRANS. +/-
RAIL
5' SIDEWALK
TRANS.
5' GRASS
6'-6" SHLDR
C&G
SALVAGE OFF PUMP.
5' SIDEWALK
8' SHLDR
APPROACH SLAB
BRIDGE