ORIGINAL TO GENERAL FILES

DEPARTMENT OF TRANSPORTATION
STATE OF GEORGIA

OFFICE OF DESIGN POLICY & SUPPORT
INTERDEPARTMENTAL CORRESPONDENCE

FILE P.I. # 0008613
CSNHS-0008-00(613)
Effingham County
GDOT District 5 - Jesup
I-16 at CR 310 Interchange Widening

OFFICE Design Policy & Support

DATE October 1, 2012

FROM for Brent Story, State Design Policy Engineer

TO SEE DISTRIBUTION

SUBJECT **APPROVED CONCEPT REPORT**

Attached is the approved Concept Report for the above subject project.

Attachment

DISTRIBUTION:

Bobby Hilliard, Program Control Administrator
Genetha Rice-Singleton, State Program Delivery Engineer
Glenn Bowman, State Environmental Administrator
Cindy VanDyke, State Transportation Planning Administrator
Ben Rabun, State Bridge Engineer
Kathy Zahul, State Traffic Engineer
Angela Robinson, Financial Management Administrator
Lisa Myers, State Project Review Engineer
Charles "Chuck" Hasty, State Materials Engineer
Jeff Baker, State Utilities Engineer
Ken Thompson, Statewide Location Bureau Chief
Karon Ivery, District Engineer
Brad Saxon, District Preconstruction Engineer
Stephen Thomas, District Utilities Engineer
Michelle Wright, Project Manager
BOARD MEMBER - 12th Cong. District

DEPARTMENT OF TRANSPORTATION
STATE OF GEORGIA
PROJECT CONCEPT REPORT

Project Type:	Exempt	P.I. Number:	0008613
GDOT District:	District 5	County:	Effingham
Federal Route Number:	I-16	State Route Number:	404

Interchange Improvements at Interstate 16 (SR 404) and Old River Road (CR310) in Effingham County

Submitted for approval: *(email to "Concept Reports"; delete any inapplicable signature lines)*

William H. Morelund Allbell:	3/21/2012
Consultant Designer & Firm or GDOT Concept/Design Phase Office Head & Office	DATE
	3/21/2012
Local Government *(if applicable)*	DATE
Bobby Hilliard	3-26-2012
Office Head *(GDOT Project Manager's Office)*	DATE
Michelle Wright	3-21-12
GDOT Project Manager	DATE

Recommendation for approval:

Program Control Administrator	DATE
* GLENN BOWMAN	5/11/2012
State Environmental Administrator *(recommendation required)*	DATE
* KATHY ZAHUL	5/8/2012
State Traffic Engineer *(recommendation required for roundabout projects)*	DATE
* LISA MYERS	5/8/2012
Project Review Engineer	DATE
* PATRICK ALLEN	5/11/2012
for State Utilities Engineer	DATE
District Engineer *(projects not originating in District Office)*	DATE
* BEN RABUN	5/31/2012
State Bridge Design Engineer *(if applicable)*	DATE
State Transportation Financial Management Administrator	DATE

The concept as presented herein and submitted for approval is consistent with that which is included in the Regional Transportation Plan (RTP) and/or the State Transportation Improvement Program (STIP).

* CINTHIA L. VANDYKE	5/8/2012
State Transportation Planning Administrator *(recommendation required)*	DATE

PROJECT LOCATION

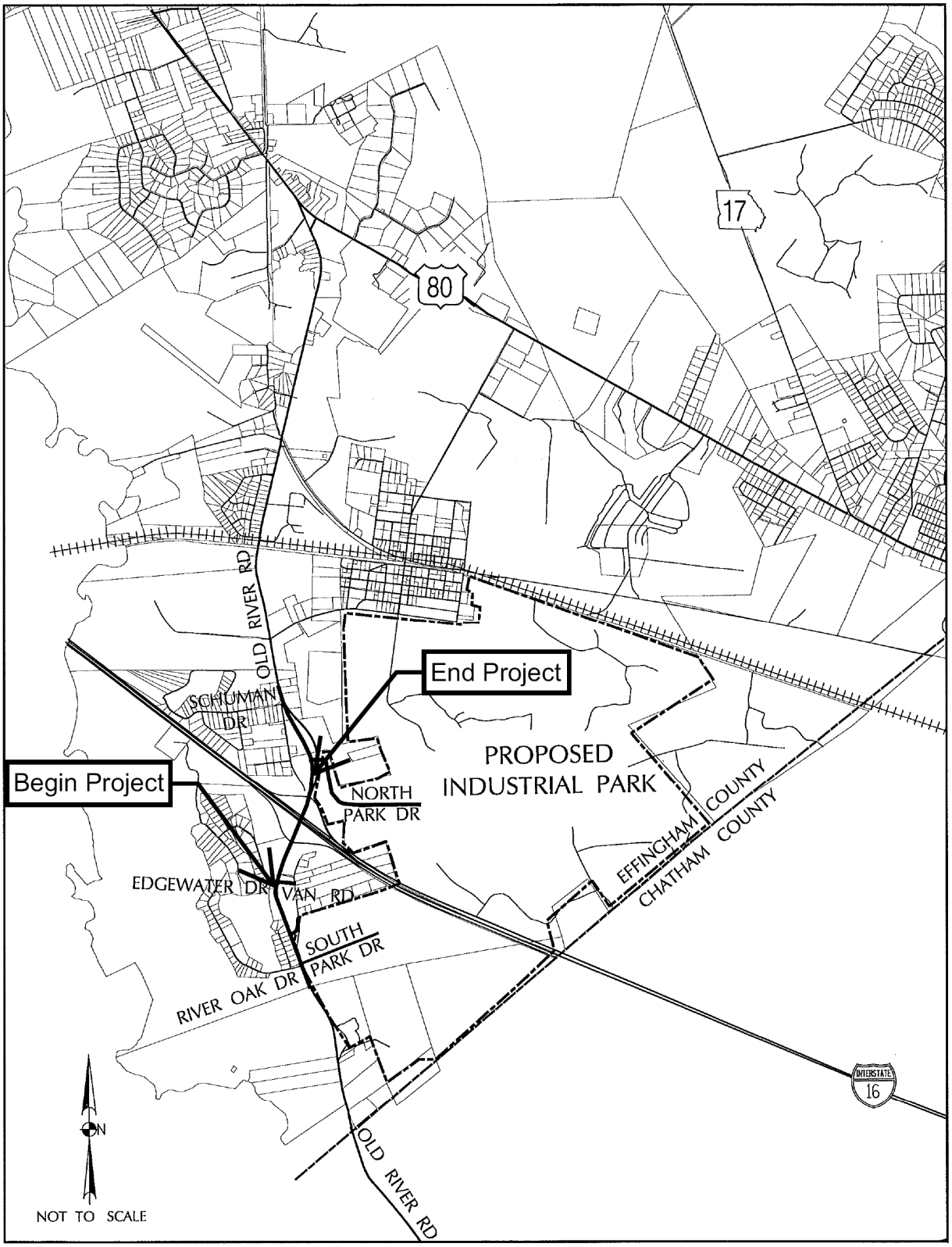

PLANNING & BACKGROUND DATA

Project Justification Statement:

As it crosses over Interstate 16, Old River Road in Effingham County is a two-lane road with an existing full movement interchange at the Interstate. While not listed on any major GDOT programs (such as GRIP or State Bike route), this road serves a growing area of the region. Specifically, there are two planned industrial/warehouse type sites planned along Old River Road on either side of the interchange.

In the year 2005, land located in the northeast and southeast quadrants of the interchange of Old River Road at I-16 was evaluated as a possible development site for industries that would be supportive of the Port of Savannah and other new industries of Effingham County. The Effingham County Development Authority began to develop a master plan for the land. A Development of Regional Impact (DRI) application and additional information were submitted to the Coastal Georgia Regional Development Center (RDC) on January 25, 2006.

The proposed industrial park development is anticipated to increase traffic on Old River Road at the I-16 interchange. Therefore, proposed improvements to the I-16/Old River Road interchange were studied to accommodate the projected year 2040 traffic volumes.

The year 2009 traffic volume on Old River Road at the I-16 interchange was 4,125 AADT; because of expected development, this value is projected to 21,575 in the year 2040. These volumes translate into level-of-service “D” and “F”, respectively. Truck percentages on Old River Road are 14% of all traffic volume over an average 24 hour period; this value is expected to increase by 20% by the year 2040.

Operationally, the I-16 at Old River Road ramp intersection conditions are currently acceptable (level-of-service “A” in the morning and “B” in the afternoon peak). Future year 2040 conditions are projected to be LOS “F” at several ramp intersections in the afternoon peak.

On Old River Road in the area of the interchange, crash analysis for the last three years of complete data available (years 2006, 2007 and 2008) showed that the crash and injury rates are both above the respective statewide averages.

This project proposes to make improvements to the Old River Road interchange with I-16 to reduce crash frequency and improve future year operational deficiencies. In addition, due to the anticipated increase in truck volumes, the project will improve the operational mobility for increasing volumes of truck traffic.

Description of the proposed project: The proposed project would widen and improve the interchange of I-16/Old River Road. The project proposes to widen the existing two-lane roadway and bridge on Old River Road to a four-lane divided highway with a 20-foot raised median. Left-turn lanes and right-turn lanes (12-foot wide) would be provided at major intersections and major commercial drives. The roadway would have 10-foot rural shoulders on both sides (6-1/2-foot paved with a 2-foot rumble strip adjacent to the edge of travel lane).

The interchange at I-16 would remain a diamond interchange; however, the ramps would be reconstructed with concrete. The concrete ramps would be reconstructed to meet the geometric design speed of 45 mph. The reconstructed 16-foot wide off-ramps would be widened to provide two 12-foot left-turn lanes and one 12-foot right-turn lane on the eastbound ramp approach to Old River Road. The

westbound ramp approach to Old River Road would have two 12-foot left-turn lanes and two 12-foot right-turn lanes. The total length of the project would be approximately 0.27 miles.

Federal Oversight: ☐ Full Oversight ☒ Exempt ☐ State Funded ☐ Other

MPO: ☒ N/A ☐ MPO -
MPO Project TIP #

Regional Commission: ☐ N/A ☒ RC – COASTAL GA
RC Project ID #

Congressional District(s): 12

Projected Traffic:
I-16
Current Year (2009): 35700 Open Year (2020): 57200 Design Year (2040): 66450

Old River Road
Current Year (2009): 4700 Open Year (2020): 24700 Design Year (2040): 25250

Functional Classification (Mainline): Rural Interstate Principal Arterial

Functional Classification (Old River Road): Rural Major Collector

Is this project on a designated bike route? ☒ No ☐ YES

Is this project located on a pedestrian plan? ☒ No ☐ YES

Is this project located on or part of a transit network? ☒ No ☐ YES

CONTEXT SENSITIVE SOLUTIONS

Issues of Concern: *N/A*

Context Sensitive Solutions: *N/A*

DESIGN AND STRUCTURAL DATA

Mainline Design Features: Interstate 16

Feature	Existing	Standard*	Proposed
Typical Section			
- **Number of Lanes**	**6**	**N/A**	****N/A**
- **Lane Width(s)**	**12'**	**12'**	****N/A**
- **Median Width & Type**	**40' depressed median**	**52-64' depressed median**	****N/A**
- **Outside Shoulder Width & Type**	**10' paved, 2' grass**	**12' paved, 2' grass**	****N/A**
- **Outside Shoulder Slope**	**6%**	**6%**	****N/A**
- **Inside Shoulder Width & Type**	**10' Paved**	**2' paved, 4'grass**	****N/A**
- **Sidewalks**	**None**	**N/A**	****N/A**
- **Auxiliary Lanes**	**None**	**N/A**	****N/A**
- **Bike Lanes**	**None**	**N/A**	****N/A**
Posted Speed	**70**	**N/A**	****N/A**
Design Speed	**70**		****N/A**
Min Horizontal Curve Radius	**1432'**	**N/A**	****N/A**
Superelevation Rate	**8%**	**8%**	****N/A**
Grade	**4%**	**3%**	****N/A**
Access Control	**Full Control of Access**	**Full Control of Access**	****N/A**
Right-of-Way Width	**330' – 1440'**		**330'-1440'*****
Maximum Grade – Crossroad	**6%**		****N/A**
Design Vehicle	**WB-67**	**WB-67**	****N/A**

**No changes are proposed to Interstate 16 mainline under this project.
***No Right of Way Acquisition is anticipated.

Mainline Design Features: Interstate 16 On/Off Ramps

Feature	Existing	Standard*	Proposed	
Typical Section				
- **Number of Lanes**	**1**	**1**	**1**	
- **Lane Width(s)**	**16'**	**16'**	**16'**	
- **Median Width & Type**	**None**	**N/A**	**None**	
- **Outside Shoulder Width & Type**	**10' paved, 4' grass**	**4' paved, 4' grass**	**10' paved, 2' grass**	
- **Outside Shoulder Slope**	**6%**	**6%**	**6%**	
- **Inside Shoulder Width & Type**	**1' paved, 4' grass**	**4' paved, 4' grass**	**4' paved, 4' grass**	
- **Sidewalks**	**None**		**None**	
- **Auxiliary Lanes**	**Separate 12' left & right turn lanes**	**N/A**	**Separate 12' left & right turn lanes**	
- **Bike Lanes**	**N/A**	**N/A**	**N/A**	
Posted Speed	**45**	**N/A**	**45**	
Design Speed	**45**	**45**	**45**	
Min Horizontal Curve Radius	**1800'**	**587'**	**587'**	
Superelevation Rate	**8%**	**8%**	**8%**	
Grade	**6%**	**6%**	**6%**	
Access Control	**Full Control of Access**	**Full Control of Access**	**Full Control of Access**	
Right-of-Way Width	**330' – 1440'**		**330' – 1440'***	**330'-1**
Maximum Grade – Crossroad	**6%**	**N/A**	**6%**	
Design Vehicle	**WB-67**	**WB-67**	**WB-67**	

*No Right of Way Acquisition is anticipated. Right of Way width for ramps matches I-16.

Crossroad Design Features: Old River Road – County Road 310

Feature	Existing	Standard*	Proposed
Typical Section			
- **Number of Lanes**	**2**	**4**	**4**
- **Lane Width(s)**	**12'**	**11-12'**	**12'**
- **Median Width & Type**	**None**	**20' Raised**	**20' Raised**
- **Outside Shoulder Width & Type**	**5' Grass**	**10' (6.5' Paved)**	**10' (6.5' paved)**
- **Outside Shoulder Slope**	**6%**	**6%**	**6%**
- **Inside Shoulder Width & Type**	**N/A**	**N/A**	**N/A**
- **Sidewalks**	**None**	**N/A**	**None**
- **Auxiliary Lanes**	**N/A**	**N/A**	**Left and right turn lanes at the interstate ramps**
- **Bike Lanes**	**N/A**	**N/A**	**N/A**
Posted Speed	**50**	**45**	**45**
Design Speed	**Could not be determined**	**45**	**45**
Min Horizontal Curve Radius	**1432'**	**643'**	**643'**
Superelevation Rate	**>8%**	**6%**	**6%**
Grade	**6%**	**7%**	**6%**
Access Control	**by permit**	**by permit**	**by permit**
Right-of-Way Width	**100' to 220'**	**150'**	**100' to 220'**
Maximum Grade – Crossroad	**4%**	**4%**	**4%**
Design Vehicle	**WB-67**	**SU**	**WB-67**

Major Structures: Existing 214' x 30.4' Steel Bridge over Interstate 16

Structure	Existing	Proposed
ID # 103-0034-0	The existing bridge is 214' long with one lane in each direction and total width of 30.4'. The sufficiency rating is 53.29.	The proposed bridge will be 242' long and will provide five 12' lanes(one being a center turn lane in the median) with a 20' raised concrete median. The total bridge width will be 87.25' out to out. See Attachment 2 for a typical section.

Major Interchanges/Intersections: Major intersections include Old River Road at the I-16 eastbound and westbound ramps. The interchanges along I-16 that are closest to the Old River Road Interchange is the US280/SR30 interchange, which is 5.82 miles west of the Old River Road Interchange and the SR 17/Bloomingdale Road Interchange, which is 4.12 miles east of the Old River Road interchange.

Utility Involvements: Communications -- ATT, Power Georgia Power

Public Interest Determination Policy and Procedure recommended (Utilities)? ☐ YES ☒ NO

SUE Required: ☐ Yes ☒ No

Railroad Involvement: *N/A*

Right-of-Way:
Required Right-of-Way anticipated: ☐ YES ☒ NO ☐ Undetermined
Easements anticipated: ☐ Temporary ☐ Permanent ☐ Utility ☐ Other

Anticipated number of impacted parcels: 0
Anticipated number of displacements (Total): 0
Businesses: 0
Residences: 0
Other: 0

Location and Design approval: ☒ Not Required ☐ Required

Off-site Detours Anticipated: ☒ No ☐ Yes ☐ Undetermined

Transportation Management Plan Anticipated: ☒ YES ☐ NO

Design Exceptions to FHWA/AASHTO controlling criteria anticipated:

FHWA/AASHTO Controlling Criteria	YES	Appvl Date (if applicable)	NO	Undetermined
1. Design Speed	☐	Click here to enter a date.	☒	☐
2. Lane Width	☐	Click here to enter a date.	☒	☐
3. Shoulder Width	☐	Click here to enter a date.	☒	☐
4. Bridge Width	☐	Click here to enter a date.	☒	☐
5. Horizontal Alignment	☐	Click here to enter a date.	☒	☐
6. Superelevation	☐	Click here to enter a date.	☒	☐
7. Vertical Alignment	☐	Click here to enter a date.	☒	☐
8. Grade	☐	Click here to enter a date.	☒	☐
9. Stopping Sight Distance	☐	Click here to enter a date.	☒	☐
10. Cross Slope	☐	Click here to enter a date.	☒	☐
11. Vertical Clearance	☐	Click here to enter a date.	☒	☐
12. Lateral Offset to Obstruction	☐	Click here to enter a date.	☒	☐
13. Bridge Structural Capacity	☐	Click here to enter a date.	☒	☐

Design Variances to GDOT standard criteria anticipated:

GDOT Standard Criteria	Reviewing Office	YES	Appvl Date (if applicable)	NO	Undetermined
1. Access Control - *Median Opening Spacing*	DP&S	☐	Click here to enter a date.	☒	☐
2. Median Usage & Width	DP&S	☐	Click here to enter a date.	☒	☐
3. Intersection Skew Angle	DP&S	☐	Click here to enter a date.	☒	☐
4. Lateral Offset to Obstruction	DP&S	☐	Click here to enter a date.	☒	☐
5. Intersection Sight Distance	DP&S	☐	Click here to enter a date.	☒	☐
6. Bike & Pedestrian Accommodations	DP&S	☐	Click here to enter a date.	☒	☐
7. GDOT Drainage Manual	DP&S	☐	Click here to enter a date.	☒	☐
8. Georgia Standard Drawings	DP&S	☐	Click here to enter a date.	☒	☐
9. GDOT Bridge & Structural Manual	Bridge Design	☐	Click here to enter a date.	☒	☐
10. Roundabout Illumination - *(if applicable)*	DP&S	☐	Click here to enter a date.	☒	☐
11. Rumble Strips/Safety Edge	DP&S	☐	Click here to enter a date.	☒	☐

VE Study anticipated: ☐ No ☒ Yes ☐ Completed – Date:

ENVIRONMENTAL DATA

Anticipated Environmental Document:

GEPA: ☐ **NEPA:** ☒ Categorical Exclusion ☐ EA/FONSI ☐ EIS

Air Quality:

Is the project located in a PM 2.5 Non-attainment area? ☒ No ☐ Yes
Is the project located in an Ozone Non-attainment area? ☒ No ☐ Yes

Environmental Permits/Variances/Commitments/Coordination anticipated:

Permit/ Variance/ Commitment/ Coordination Anticipated	YES	NO	Remarks
1. U.S. Coast Guard Permit	☐	☒	
2. Forest Service/Corps Land	☐	☒	
3. CWA Section 404 Permit	☐	☒	
4. Tennessee Valley Authority Permit	☐	☒	
5. Buffer Variance	☐	☒	
6. Coastal Zone Management Coordination	☐	☒	

7. NPDES	☒	☐	
8. FEMA	☐	☒	
9. Cemetery Permit	☐	☒	
10. Other Permits	☐	☒	
11. Other Commitments	☐	☒	
12. Other Coordination	☐	☒	

Is a PAR required? ☒ No ☐ Yes ☐ Completed – Date: Click here to enter a date.

NEPA/GEPA: *Process has not been started.*

Ecology: *Wetlands have been located. No threatened or endangered species were found.*

History: *No historical properties have been identified in the project corridor.*

Archeology: *None*

Air & Noise: *A full air and noise study will be required. No mitigation is anticipated.*

Public Involvement: *Public Information meeting*

Major stakeholders: *Traveling Public, Effingham County Industrial Development Authority*

CONSTRUCTION

Issues potentially affecting constructability/construction schedule: *None*

Early Completion Incentives recommended for consideration: ☒ No ☐ Yes

PROJECT RESPONSIBILITIES

Project Activities:

Project Activity	Party Responsible for Performing Task(s)
Concept Development	Effingham County
Design	Effingham County
Right-of-Way Acquisition	Effingham County (if required)
Utility Relocation	Utility Companies
Letting to Contract	Georgia DOT
Construction Supervision	Georgia DOT
Providing Material Pits	Contractor (if required)
Providing Detours	Contractor (if required)
Environmental Studies, Documents, and Permits	Effingham County
Environmental Mitigation	Effingham County
Construction Inspection & Materials Testing	Georgia DOT

Lighting required: ☒ No ☐ Yes

Initial Concept Meeting: *N/A*

Concept Meeting: *Held February 16, 2012 (notes attached)*

Other projects in the area:
IM000-0016-01(110) I-16 WIDEN 10 BRIDGES @ MP 138.3| 145.9| 146.6| 146.8| 147.2
STP00-0218-01(001) JIMMY DELOACH PARKWAY EXTENSION FM I-16 TO SR 26/US 80
CSNHS-M003-00(511) I-16 WB & I-95 SB @ TRUCK WEIGH STATIONS - PHASE I
CSNHS-M003-00(514) I-16 @ EB TRUCK WEIGH STATION IN BRYAN - PHASE II

Other coordination to date: *N/A*

Project Cost Estimate and Funding Responsibilities:

	Breakdown of PE	ROW	Utility	CST*	Environmental Mitigation	Total Cost
By Whom	Local	Local	Local	Local/GDOT	Local	
$ Amount	$500,000	$0	$104,000	~~$8,649,445~~ $8,750,244.00	$35,000	~~$9,288,445~~ $9,389,245
Date of Estimate	8/5/2011	8/5/2011	5/25/12	5/~~18/12~~ 9/21/12	5/18/12	

*CST Cost includes: Construction, Engineering and Inspection, and Liquid AC Cost Adjustment.

ALTERNATIVES DISCUSSION

Alternative selection:

Preferred Alternative: *Reconstruct the bridge and ramps with additional capacity*			
Estimated Property Impacts:	**0**	**Estimated Total Cost:**	**$9,500.000**
Estimated ROW Cost:	**0**	**Estimated CST Time:**	**24 months**
Rationale: *This alternative increases the capacity of the interchange without impacting property owners or environmentally sensitive areas.*			

No-Build Alternative:			
Estimated Property Impacts:	**0**	**Estimated Total Cost:**	**0**
Estimated ROW Cost:	**0**	**Estimated CST Time:**	**0**
Rationale: *The no-build alternative was rejected due to the anticipated increase in traffic along the corridor.*			

Alternative 1: *Partial realignment of Old River Road to correct superelevation*			
Estimated Property Impacts:	**5**	**Estimated Total Cost:**	**$11,500,000**
Estimated ROW Cost:	**$150,000**	**Estimated CST Time:**	**24 months**
Rationale: Alternative 1 utilizes a curve with a lower superelevation rate on the large curve on Old River Road north of I-16 dictating a curve with a larger radius. This alternative had a greater impact on right of way, displacements, and wetlands.			

Comments: None.

Attachments:

1. Concept Layout
2. Typical sections
3. Detailed Cost Estimates:
    a. Construction including Engineering and Inspection
    b. Completed Fuel & Asphalt Price Adjustment forms
    c. Utilities
    d. Environmental Mitigation
4. Cost Benefit
5. Traffic Forecasting and Crash summaries
6. Traffic diagrams
7. Capacity analysis summary (tabular format)
8. Signal Warrant Analysis and Roundabout Analysis
9. Bridge inventory
10. Concept Team Meeting Notes

APPROVALS

Concur: _____
Director of Engineering

Approve: _____ 9/24/2012
Chief Engineer Date

Attachment 1
Concept Layout

COUNTY	PROJECT NUMBER	SHEET NO.	TOTAL SHEETS
EFFINGHAM	CSNHS-0008-00(613)		

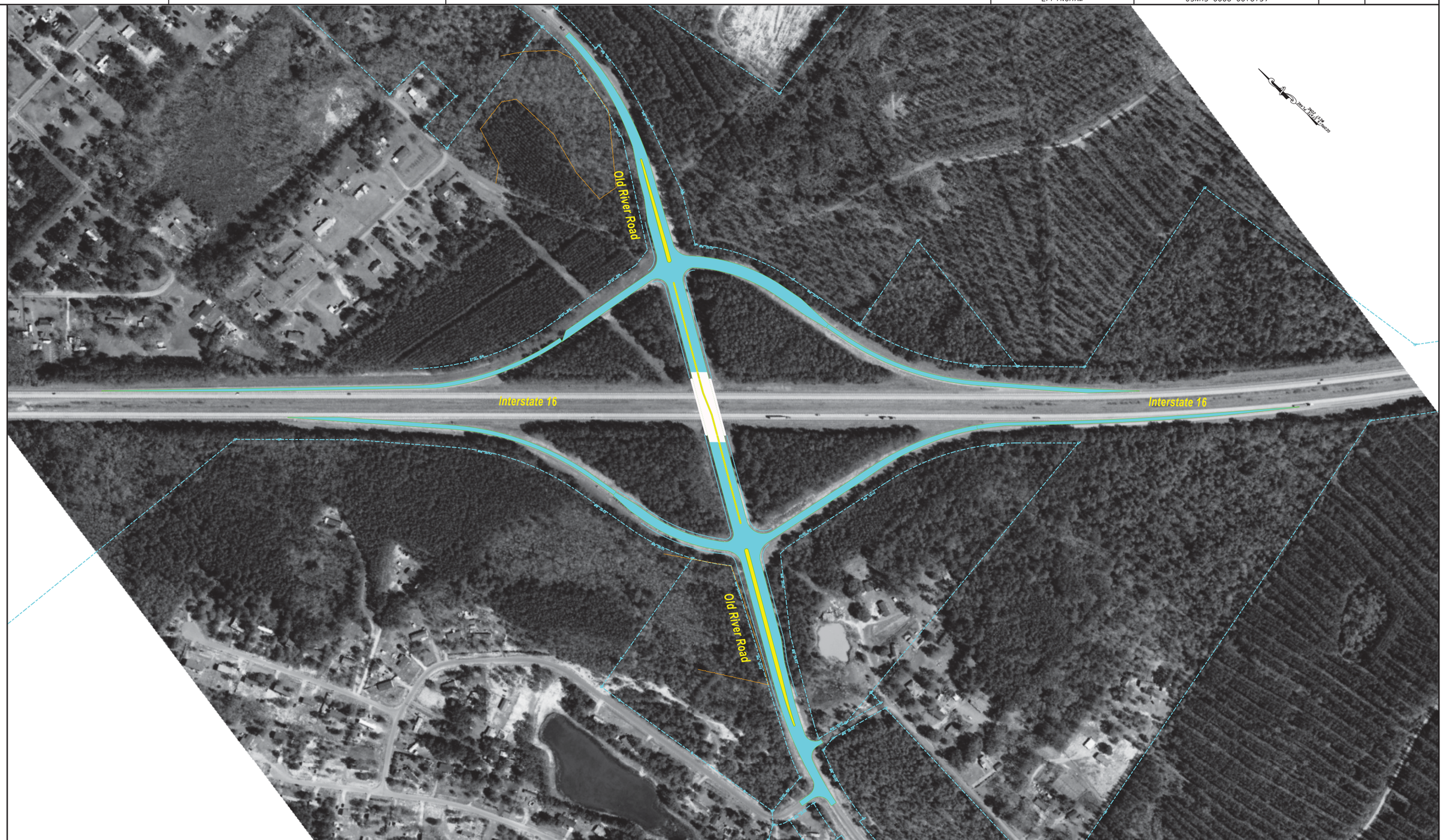

PROPERTY AND EXISTING R/W LINE
REQUIRED R/W LINE
CONSTRUCTION LIMITS
EASEMENT FOR CONSTR & MAINTENANCE OF SLOPES
EASEMENT FOR CONSTR OF SLOPES
EASEMENT FOR CONSTR OF DRIVES

MORELAND-ALTOBELLI ASSOC., INC.
(912) 963-1112

DESIGNED BY:	
DRAWN BY:	
CHECKED BY:	
SUPERVISED BY:	WILLIAM DIAL P.E.

SCALE IN FEET
0 200 400 800

REVISION DATES

STATE OF GEORGIA
DEPARTMENT OF TRANSPORTATION

OFFICE:

MAINLINE PLAN
OLD RIVER ROAD @ I-16

CSNHS-0008-00(613) 03-14-12

DRAWING No. 13-001

Attachment 2
Typical Sections

COUNTY	PROJECT NUMBER	SHEET NO.	TOTAL SHEETS
$COUNTY$	$PROJECT NUMBER$		

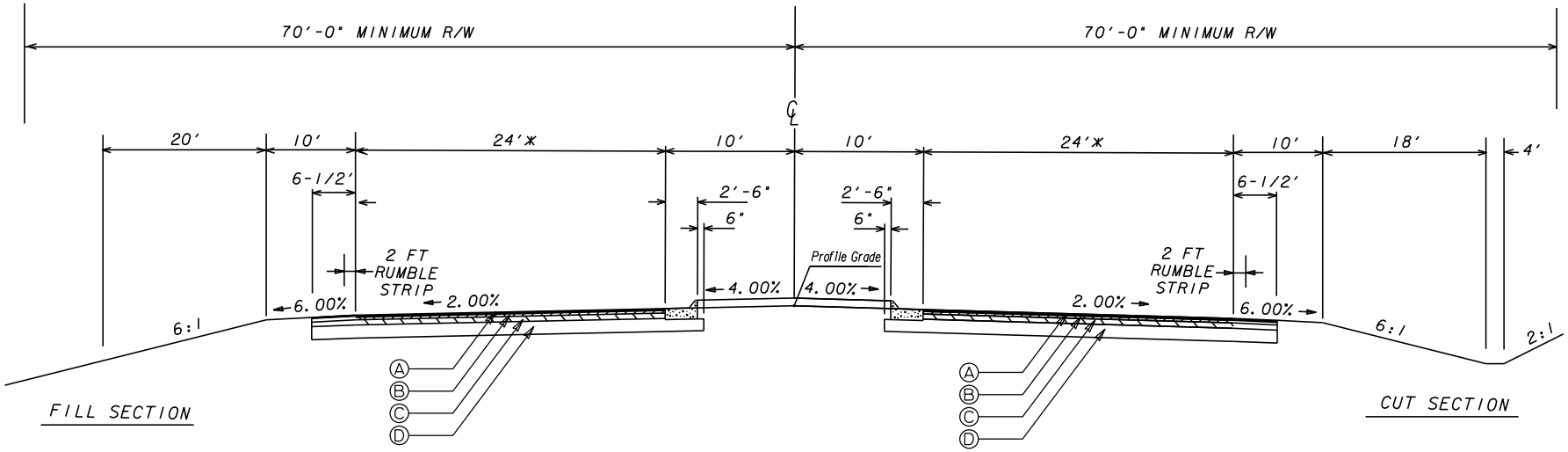

TYPICAL SECTION

NOT TO SCALE

* ADDITIONAL 12' LANES WHERE REQUIRED.

PROPOSED PAVEMENT

Ⓐ ASPHALTIC CONC. 12.5 mm SUPERPAVE (165 lbs/SY)
Ⓑ ASPHALTIC CONC. 19 mm SUPERPAVE (220 lbs/SY)
Ⓒ ASPHALTIC CONC. 25 mm SUPERPAVE (550 lbs/SY)
Ⓓ GRADED AGGREGATE BASE (12")

OLD RIVER ROAD

MORELAND-ALTOBELLI ASSOC., INC.
(912) 963-1112

DESIGNED BY:	
DRAWN BY:	
CHECKED BY:	
SUPERVISED BY:	WILLIAM DIAL P.E.

REVISION DATES

STATE OF GEORGIA
DEPARTMENT OF TRANSPORTATION

OFFICE:

TYPICAL SECTIONS

DRAWING No. 5-01

COUNTY	PROJECT NUMBER	SHEET NO.	TOTAL SHEETS
$COUNTY$	$PROJECT NUMBER$		

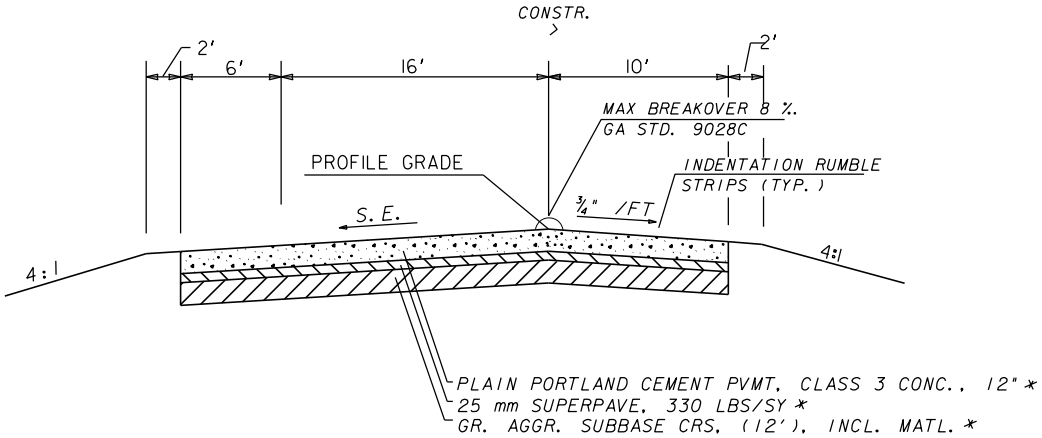

*PAVEMENT SECTION FOR ESTIMATION PURPOSES ONLY

SUPER ELEVATION SECTION

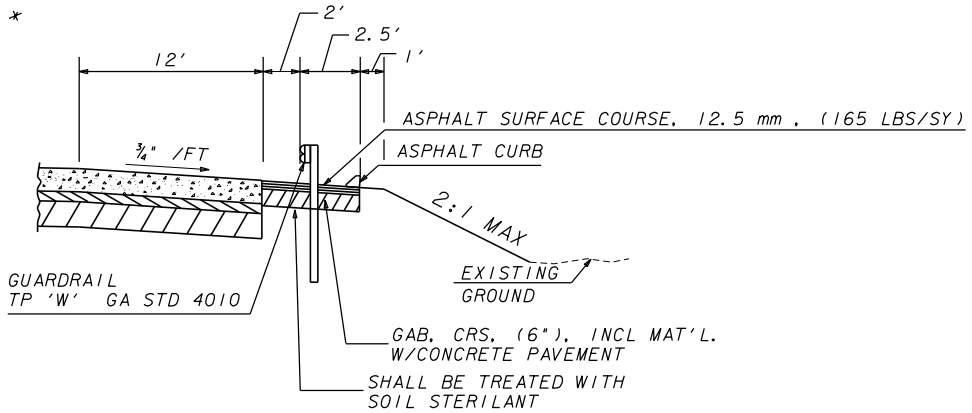

SHOULDER DETAIL FOR GUARDRAIL W/CONCRETE PAVEMENT

(SEE PLANS FOR LOCATION)
(SEE GA. STD. 4051 FOR DETAILS)
N.T.S.

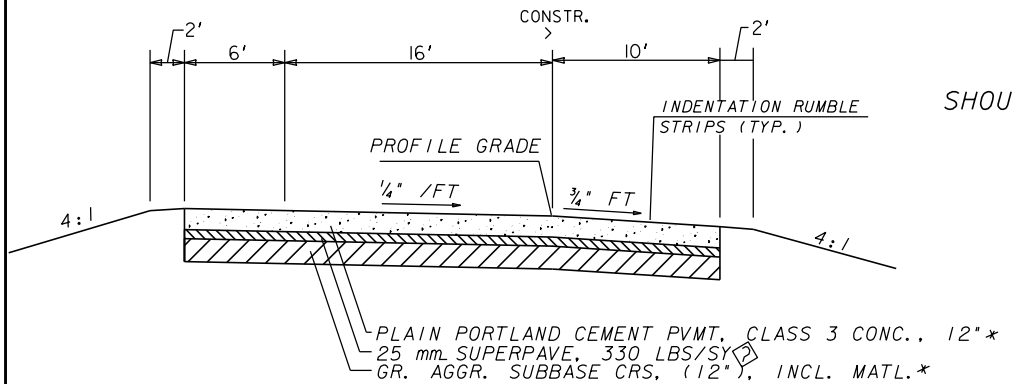

*PAVEMENT SECTION FOR ESTIMATION PURPOSES ONLY

NORMAL CROWN SECTION

TYPICAL SECTION

NOT TO SCALE

I-16 RAMPS	MORELAND-ALTOBELLI ASSOC., INC. (912) 963-1112	REVISION DATES	STATE OF GEORGIA DEPARTMENT OF TRANSPORTATION
	DESIGNED BY:		OFFICE:
	DRAWN BY:		TYPICAL SECTIONS
	CHECKED BY:		DRAWING No. 5-02
	SUPERVISED BY: WILLIAM DIAL P.E.		

COUNTY	PROJECT NUMBER	SHEET NO.	TOTAL SHEETS
$COUNTY$	$PROJECT NUMBER$		

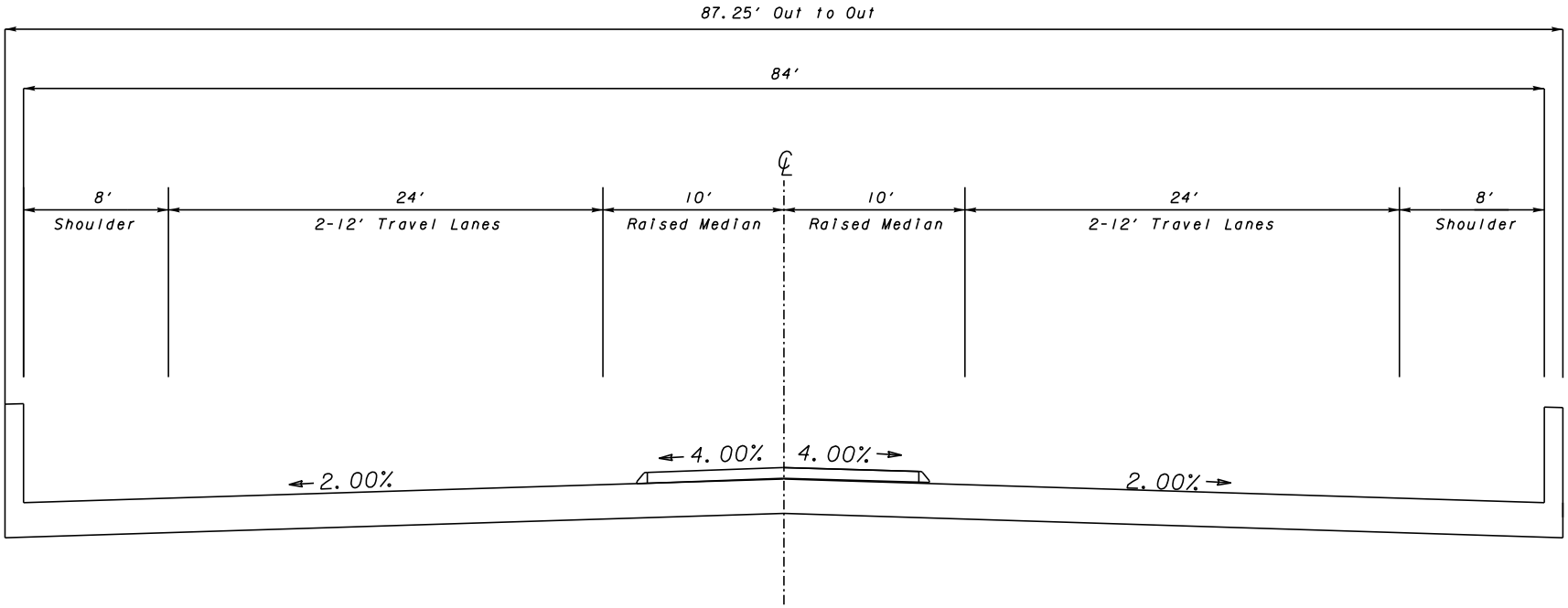

TYPICAL SECTION

NOT TO SCALE

OLD RIVER ROAD BRIDGE

MORELAND-ALTOBELLI ASSOC., INC.
(912) 963-1112

DESIGNED BY:		
DRAWN BY:		
CHECKED BY:		
SUPERVISED BY:	WILLIAM DIAL P.E.	

REVISION DATES		

STATE OF GEORGIA
DEPARTMENT OF TRANSPORTATION

OFFICE:

TYPICAL SECTIONS

DRAWING No.
5-03

Attachment 3
Detailed Cost Estimate

Section Roadway

Item Number	Item Description	Units	Quantity	Unit Price	Cost
150-1000	TRAFFIC CONTROL - CSNHS-0008-00 (613)	Lump Sum	1	$100,000.00	$100,000
201-1500	CLEARING & GRUBBING - CSNHS-0008-00 (613)	Lump Sum	1	$150,000.00	$150,000
206-0002	BORROW EXCAV, INCL MATL	CY	66,156	$3.61	$238,823
610-5060	GR AGGR BASE CRS, 6 INCH, INCL MATL	SY	960	$6.08	$5,837
310-5120	GR AGGR BASE CRS, 12 INCH, INCL MATL	SY	58,915	$12.16	$716,406
318-3000	AGGR SURF CRS	TN	300	$15.71	$4,713
402-3121	RECYCLED ASPH CONC 25 MM SUPERPAVE, GP 1 OR 2, INCL BITUM MATL & H LIME	TN	12,609	$80.00	$1,008,720
402-3141	RECYCLED ASPH CONC 12.5 MM SUPERPAVE, GP 1 OR 2, INCL BITUM MATL	TN	2,246	$80.00	$179,680
402-3190	RECYCLED ASPH CONC 19 MM SUPERPAVE, GP 1 OR 2,INCL BITUM MATL & H LIME	TN	2,889	$80.00	$231,120
413-1000	BITUM TACK COAT	GL	2,728	$1.99	$5,429
433-1000	REINF CONC APPROACH SLAB	SY	470	$139.45	$65,542
436-1000	ASPHALTIC CONCRETE CURB - 6 IN	LF	4,659	$7.23	$33,685
439-0026	PLAIN PC CONC PVMT, CL 3 CONC, 12 INCH THK	SY	32,652	$66.94	$2,185,725
441-0754	CONCRETE MEDIAN, 7 1/2 IN	SY	2,127	$38.86	$82,655
456-2012	INDENTATION RUMBLE STRIPS - GROUND IN PLACE (CONTINUOUS)	GLM	2	$206.67	$413
634-1200	RIGHT OF WAY MARKERS	EA	50	$98.50	$4,925
641-1100	GUARDRAIL, TP T	LF	84	$47.47	$3,987
641-1200	GUARDRAIL, TP W	LF	4,575	$14.86	$67,985
641-5001	GUARDRAIL ANCHORAGE, TP 1	EA	6	$596.30	$3,578
641-5012	GUARDRAIL ANCHORAGE, TP 12	EA	6	$1,751.80	$10,511
	Section Sub Total				$5,099,733

Major Structures

Item Number	Item Description	Units	Quantity	Unit Price	Cost
999-0000	BRIDGE CONSTRUCTION	SF	21,140	$100.00	$2,114,000
540-1101	REMOVAL OF EXISTING BRIDGE	LS	1	$150,000.00	$150,000
	Section Sub Total				$2,264,000

Section Drainage

Item Number	Item Description	Units	Quantity	Unit Price	Cost
441-0301	CONC SPILLWAY, TP 1	EA	4	$1,509.25	$6,037
550-4218	FLARED END SECTION 18 IN, STORM DRAIN	EA	3	$443.31	$1,330
576-1018	SLOPE DRAIN PIPE, 18 IN	LF	180	$24.91	$4,484
	Section Sub Total				$11,851

Section Erosion Control

Item Number	Item Description	Units	Quantity	Unit Price	Cost
163-0232	TEMPORARY GRASSING	AC	10	$165.37	$1,654
163-0240	MULCH	TN	170	$165.06	$28,060
163-0300	CONSTRUCTION EXIT	EA	2	$992.45	$1,985
163-0527	CONSTRUCT AND REMOVE RIP RAP CHECK DAMS, STONE PLAIN RIP RAP/SAND BAGS	EA	15	$151.75	$2,276
165-0101	MAINTENANCE OF CONSTRUCTION EXIT	EA	2	$477.88	$956
165-0030	MAINTENANCE OF TEMPORARY SILT FENCE, TP C	LF	6,543	$0.66	$4,318
167-1000	WATER QUALITY MONITORING AND SAMPLING	EA	2	$450.46	$901
167-1500	WATER QUALITY INSPECTIONS	MO	24	$637.58	$15,302
171-0030	TEMPORARY SILT FENCE, TYPE C	LF	13,086	$2.88	$37,688
700-6910	PERMANENT GRASSING	AC	19	$614.21	$11,670
700-7000	AGRICULTURAL LIME	TN	57	$48.18	$2,746
700-8000	FERTILIZER MIXED GRADE	TN	14	$360.57	$5,048
700-8100	FERTILIZER NITROGEN CONTENT	LB	950	$2.30	$2,185
716-2000	EROSION CONTROL MATS, SLOPES	SY	30,000	$0.87	$26,100
	Section Sub Total				$140,889

Section Signing and Marking

Item Number	Item Description	Units	Quantity	Unit Price	Cost
636-1020	HIGHWAY SIGNS, TP 1 MATL, REFL SHEETING, TP 3	SF	250	$12.68	$3,170
636-1033	HIGHWAY SIGNS, TP 1 MATL, REFL SHEETING, TP 9	SF	600	$17.20	$10,320
636-2070	GALV STEEL POSTS, TP 7	LF	150	$6.38	$957
636-2080	GALV STEEL POSTS, TP 8	LF	1200	$9.49	$11,388
653-0110	THERMOPLASTIC PVMT MARKING, ARROW, TP 1	EA	2	$70.41	$141
653-0120	THERMOPLASTIC PVMT MARKING, ARROW, TP 2	EA	8	$70.03	$560
653-1501	THERMOPLASTIC SOLID TRAF STRIPE, 5 IN, WHITE	LF	6375	$0.38	$2,423
653-1502	THERMOPLASTIC SOLID TRAF STRIPE, 5 IN, YELLOW	LF	11900	$0.39	$4,641
653-1704	THERMOPLASTIC SOLID TRAF STRIPE, 24 IN, WHITE	LF	175	$3.56	$623
653-3501	THERMOPLASTIC SKIP TRAF STRIPE, 5 IN, WHITE	GLF	400	$0.31	$124
653-6004	THERMOPLASTIC TRAF STRIPING, WHITE	SY	150	$2.60	$390
653-6006	THERMOPLASTIC TRAF STRIPING, YELLOW	SY	450	$2.56	$1,152
654-1001	RAISED PVMT MARKERS TP 1	EA	40	$2.88	$115
654-1003	RAISED PVMT MARKERS TP 3	EA	100	$3.49	$349
657-1085	PREFORMED PLASTIC SOLID PVMT MKG, 8 IN, CONTRAST (BLACK-WHITE), TP PB	LF	22,106	$5.15	$113,846
657-1244	PREFORMED PLASTIC SOLID PVMT MKG, 24 IN, WHITE, TP PB	LF	90	$16.76	$1,508
657-3085	PREFORMED PLASTIC SKIP PVMT MKG, 8 IN, CONTRAST (BLACK-WHITE), TP PB	GLF	1,200	$2.85	$3,420
657-5001	PREFORMED PLASTIC PAVEMENT MARKING, WHITE, TP PB	SY	40	$19.88	$795
657-5016	PREFORMED PLASTIC PVMT MKG, WORDS AND/OR SYM, ARROW TP 1, WHITE, TP PB	EA	5	$355.94	$1,780
657-5017	PREFORMED PLASTIC PVMT MKG, WORDS AND/OR SYM, ARROW TP 2, WHITE, TP PB	EA	40	$541.35	$21,654
657-6085	PREFORMED PLASTIC SOLID PVMT MKG, 8 IN, CONTRAST (BLACK-YELLOW), TP PB	LF	600	$5.17	$3,102
	Section Sub Total				$182,458

Section Traffic Signal

Item Number	Item Description	Units	Quantity	Unit Price	Cost
639-4004	STRAIN POLE, TP IV	EA	8	$5,833.22	$46,666
647-1000	TRAFFIC SIGNAL INSTALLATION NO - 1	Lump Sum	1	$125,000.00	$125,000
647-1000	TRAFFIC SIGNAL INSTALLATION NO - 2	Lump Sum	1	$125,000.00	$125,000
	Section Sub Total				$296,666

Subtotal of Construction Cost	$7,995,597
E&I (5%)	$399,780
Grand Total	$8,395,376

PROJ. NO.	CSNHS-0008-00 (613)	CALL NO.
P.I. NO.	0008613	
DATE	11/7/2011	

INDEX (TYPE)	DATE	INDEX
REG. UNLEADED	Nov-11	$ 3.353
DIESEL		$ 3.847
LIQUID AC		$ 558.00

Link to Fuel and AC Index:
http://www.dot.ga.gov/doingbusiness/Materials/Pages/asphaltcementindex.aspx

LIQUID AC ADJUSTMENTS

PA=[((APM-APL)/APL)]xTMTxAPL

Asphalt

Price Adjustment (PA)				**250145.82**	**$**	**250,145.82**
Monthly Asphalt Cement Price month placed (APM)	Max. Cap	60%	$	892.80		
Monthly Asphalt Cement Price month project let (APL)			$	558.00		
Total Monthly Tonnage of asphalt cement (TMT)				747.15		

ASPHALT	Tons	%AC	AC ton
Leveling		5.0%	0
12.5 OGFC		5.0%	0
12.5 mm	2246	5.0%	112.3
9.5 mm SP		5.0%	0
25 mm SP	9808	5.0%	490.4
19 mm SP	2889	5.0%	144.45
	14943		**747.15**

BITUMINOUS TACK COAT

Price Adjustment (PA)			**$**	**3,922.86**	**$**	**3,922.86**
Monthly Asphalt Cement Price month placed (APM)	Max. Cap	60%	$	892.80		
Monthly Asphalt Cement Price month project let (APL)			$	558.00		
Total Monthly Tonnage of asphalt cement (TMT)				11.71703532		

Bitum Tack Gals	gals/ton	tons
2728	232.8234	11.7170353

PROJ. NO.	CSNHS-0008-00 (613)	CALL NO.	
P.I. NO.	0008613		
DATE	11/7/2011		

BITUMINOUS TACK COAT (surface treatment)

Price Adjustment (PA)				**0**	**$ -**
Monthly Asphalt Cement Price month placed (APM)	Max. Cap	60%	$	892.80	
Monthly Asphalt Cement Price month project let (APL)			$	558.00	
Total Monthly Tonnage of asphalt cement (TMT)				0	

Bitum Tack	SY	Gals/SY	Gals	gals/ton	tons
Single Surf. Trmt.		0.20	0	232.8234	0
Double Surf.Trmt.		0.44	0	232.8234	0
Triple Surf. Trmt		0.71	0	232.8234	0
					0

TOTAL LIQUID AC ADJUSTMENT	**$**	**254,068.68**

D.O.T. 66

DEPARTMENT OF TRANSPORTATION
STATE OF GEORGIA

INTERDEPARTMENTAL CORRESPONDENCE

FILE: PI # 0008613 EFFINGHAM OFFICE: Utilities

DATE: May 22, 2012

FROM: Stephen Thomas, District Utilities Engineer

TO: Michelle Wright; Project Manager

ATTENTION: William Dial; Moreland Altobelli

SUBJECT: Utility Cost Estimate- Interchange Improvements @I-16 & Old River Road

Per a request received May 17, 2012, a review of the preliminary plans and phone calls to utility owners in the area was made by this office and the following utilities were found to be located within the project limits:

Telephone	**AT&T**
Power	**Georgia Power Company-Distribution**

This project consists of widening the existing bridges on CR 310 Effingham County over I-16 with improvements to existing ramps.

All existing facilities that will be affected appear to be on existing R/W.

This estimate is based upon reviewing preliminary plans dated 3-24-11.

TELEPHONE

The existing telecommunication facilities that may be in conflict belong to **AT&T.**

AT&T has facilities at the following locations;

From the beginning of the project south of I-16 to the south end of the existing bridge over I-16, **AT&T** has 1,700 LF of buried phone cable on the west side of Old River Road, if these need to be relocated. The estimated cost to **AT&T** is $34,000.00.

These are the known facilities belonging to **AT&T**, the estimated non-reimbursable cost amounts to $34,000.00.

Continued……

POWER

The existing power facilities that may be in conflict on this project belong to **Georgia Power Company-Distribution**

Georgia Power Company-Distribution facilities at the following locations;

From the beginning of the project south of I-16 to the pole north of I-16 mainline, **GPC-D** has 2,160 LF of 3 phase aerial distribution with 7 poles, appears to be on existing right of way and is not reimbursable to them.

The estimated cost to **GPC-D** is $70,000.00.

These are the known facilities belonging to **GPC-D** in this project; the estimated non-reimbursable cost is $70,000.00.

The total estimated non-reimbursable cost for this project is $104,000.00.

The total estimated reimbursable cost for this project is $0.00.

The total estimated non-reimbursable and reimbursable cost for this project is $104,000.00.

If there are any questions please contact Teresa Scott at tscott@dot.ga.gov or (912) 427-5754.

Copy:

Angie Robinson, Office of Financial Management (via e-mail)
Patrick Allen, Utilities Preconstruction Engineer (via e-mail)
Vahid Munshi, Utilities Preconstruction Engineer (via e-mail)
District Office files
Utility Office Files

Moreland Altobelli Associates, Inc.
67 Brampton Road
Garden City, Georgia 31408
Phone: 912-963-1112 Fax: 912-963-1120

Preliminary Mitigation Cost Estimate

Project:	**Interchange Improvements at Interstate 16 and Old River Road in Effingham County**	Date	05/18/12
	CSNHS-0008-00(613), PI No. 0008613	MA Project No.	EFF017
Prepared By:	Matt Chamblee	CC: Project File	
Prepared On:	05/18/12		

As requested for the concept cost estimate of the subject project, a preliminary mitigation cost estimate has been prepared as detailed below. The cost estimate is based on an anticipated cost of $3,500 per wetland credit and $45 per stream credit. This estimate was prepared as part of the PAR process.

Wetlands Credits	Cost	Stream Credits	Cost
10	$35,000	0	$0
Total Cost	$237,873		

Attachment 4
Cost Benefit Analysis

GDOT Benefit-Cost Calculator

enter information in green cells

Project Information

ID	0008613
Description	I-16 Old River Road interchange

Cost Estimate

Date of estimate		3/16/12
PE cost	$	500,000
ROW cost	$	-
UTILITY cost	$	100,000
CST cost	$	8,883,770
Total	$	9,483,770

Traffic in 2040

Source of traffic data	Design Consultant provided traffic data. GDOT Planning approved traffic.
Without project (nobuild)	
Annual VMT	8,386,787
Annual VHT	246,884
Average speed (mph)	34
With project (build)	
Annual VMT	8,386,787
Annual VHT	175,246
Average speed (mph)	48

Parameters	Default	Override	Used
Analysis year	2035	2040	2040
Discount rate	4.0%		4%
Design life (years)	25	20	20
Base year of cost estimate	N/A	2011	2011
Current CST program year	N/A	2020	2020
Fuel price ($/gallon)	3.22		3.22
Fuel economy (mpg)	18.03		18.03
Value of auto travel ($/hr)	13.75		13.75
Value of truck travel ($/hr)	72.65		72.65
Percent trucks	12%	30%	30%
Include GSP benefits	No		No

Costs		
Total cost	$	9,483,770
Annualized cost	**$**	**573,975**
Auto Delay Costs		
Nobuild	$	2,376,259
Build	$	1,686,743
Auto delay savings	**$**	**689,516**
Truck Delay Costs		
Nobuild	$	5,380,837
Build	$	3,819,487
Truck delay savings	**$**	**1,561,350**
Fuel Costs		
Nobuild	$	1,497,807
Build	$	1,497,807
Fuel cost savings	**$**	**-**
Change in GSP		NA
Auto delay cost adjustment		NA
Truck delay cost adjustment		NA
Fuel cost adjustment		NA
Total benefit adjustment		**NA**
Benefits in 2040	**$**	**2,250,866**
Benefit-Cost Ratio		**3.92**

Notes

Attachment 5
Traffic Forecasting and Crash Summaries

Department of Transportation
State of Georgia

INTERDEPARTMENT CORRESPONDENCE

FILE CSNHS-0008-00(613), Effingham County
P.I. # 0008613

OFFICE Planning

DATE March 12, 2010

FROM Angela T. Alexander, State Transp. Planning Administrator

TO Bobby K. Hilliard, P.E., State Program Delivery and Consultant Design Engineer

SUBJECT **Reviewed** Design Traffic for I-16 @ C.R. 310/Old River Road-Interchange; Inc. Widening Old River.

As per your request, we reviewed the consultant's Design Traffic for the above project.

The Design Traffic is approved based on the information furnished. If you have any questions concerning this information please contact Abby Ebodaghe at (404) 631-1923.

ATA/AFE

Traffic Forecasting Methodology for the I-16/Old River Road Interchange

Existing turning movement counts and 24-hour traffic counts were taken in October of 2005 on Old River Road, the I-16 on/off ramps and the I-16 mainline. Truck classification counts were also taken to determine truck percentages on Old River Road and I-16. The raw traffic data is attached.

The year 2005 raw traffic counts were comparable to the 2008 GDOT STARS ADT volumes. In some cases the 2008 volumes were lower than 2005 raw counts; therefore, 2005 raw traffic counts were adjusted to obtain appropriate or reasonable 2009 existing traffic volumes.

Historical traffic data for the area was obtained from GDOT from 1990 to 2008. From this data, an average growth rate of 2% was calculated for I-16 and Old River Road. However from 2003 to 2008, there was negative growth rate on Old River Road that would account for a 1% reduction in the growth rate. Therefore to determine the 2020 background traffic on Old River Road 2020, the calculated 1% growth rate was applied to the 2009 traffic. I-16 traffic data did not show negative growth from 1990 to 2008, therefore 2% was used from 2009 to 2020 on I-16.

Traffic growth is not anticipated to be sustained at 1% (Old River Rd) or 2% (I-16) from 2020 to 2040, therefore, 0.5% (Old River Road) and 1% (I-16) growth rate was applied to the 2020 traffic for 20 years to obtain the 2040 background traffic volumes. The traffic generated by the industrial park north and south of the interchange was added to the background traffic to obtain the projected 2020 build and 2040 design traffic.

The traffic generated by the industrial development was calculated with trip generation rates in the *Trip Generation Manual, 7th Edition* published by the Institute of Transportation Engineers. A summary of the trip generation of the developments are shown in the Table 1.

Table 1: Trip Generation

Land Use	Size	AM Peak Hour			PM Peak Hour			Weekday
		Total	Enter	Exit	Total	Enter	Exit	
Industrial Park (north)	3,426,232 SF	2,880	2,360	520	2,945	620	2,325	23,800
25% reduction *		2,160	1,770	390	2,209	465	1,744	
10% reduction **		1,872	1,534	338	1,914	403	1,511	21,420
Industrial Park (south)	1,948,224 SF	1,635	1,340	295	1,675	260	1,415	13,500
25% reduction*		1,226	1,005	221	1,256	195	1,061	
10% reduction**		1,063	871	192	1,089	169	920	12,150

*In large industrial parks it is common to have employees work in shifts that create peaks at other hours of the day than the typical 7:00-9:00 a.m. and 4:00-6:00 p.m. Therefore, traffic was reduced by 25% to account for flexible hours and shift changes.

**The industrial traffic was reduced an additional 10% from the total trip generation to account for the predominate use of warehouse space in the industrial park. Warehouse space has fewer employees per square-foot of building then general industrial park buildings.

The traffic generated from the industrial park north and south of the I-16 interchange was distributed according to the following percentages:

- 40% to and from the east on I-16
- 25% to and from the west on I-16
- 20% to and from the north on Old River Road
- 15% to and from the south on Old River Road

Attachment 6
Traffic Diagrams

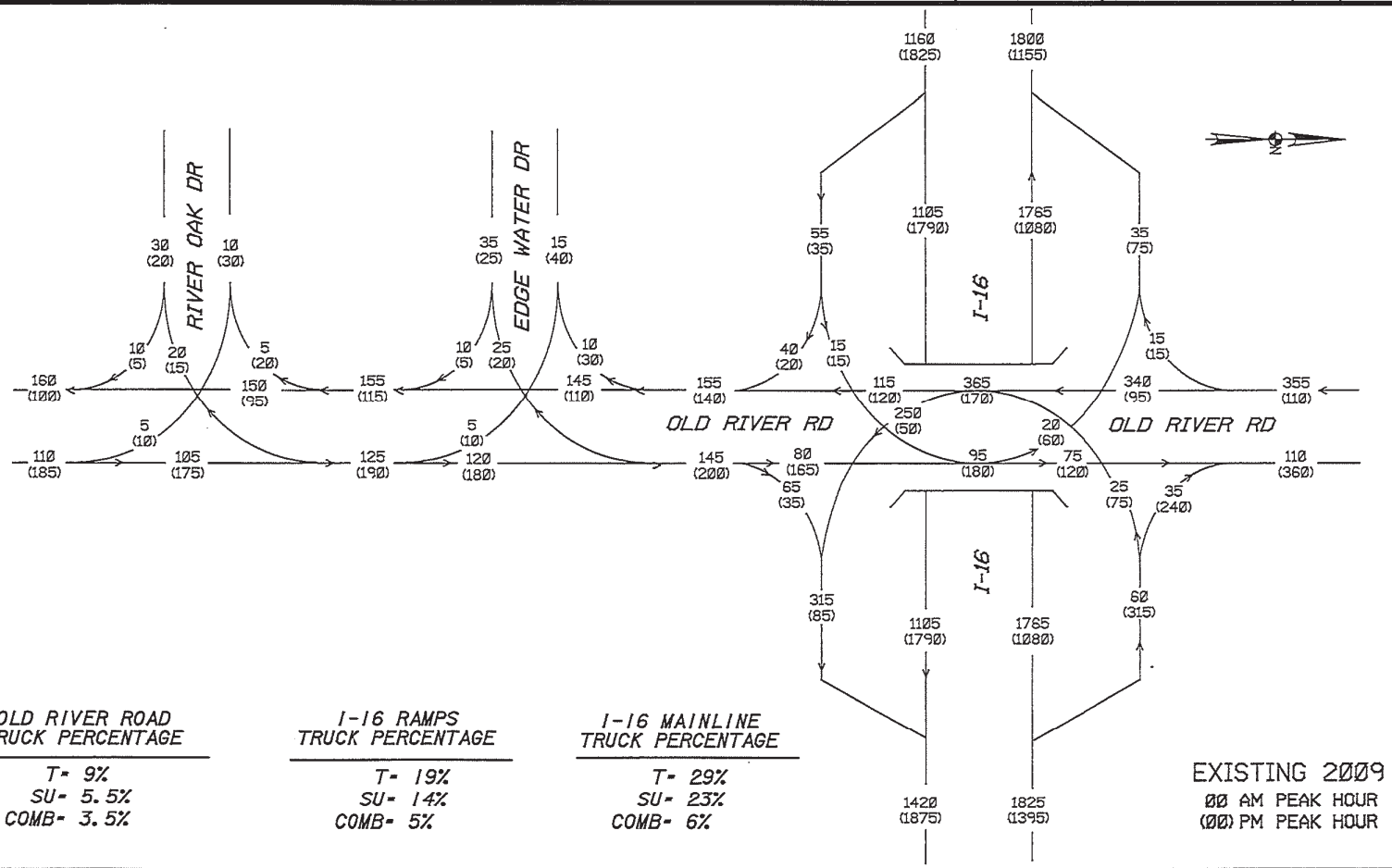

OLD RIVER ROAD TRUCK PERCENTAGE	I-16 RAMPS TRUCK PERCENTAGE	I-16 MAINLINE TRUCK PERCENTAGE
T- 9%	T- 19%	T- 29%
SU- 5.5%	SU- 14%	SU- 23%
COMB- 3.5%	COMB- 5%	COMB- 6%

EXISTING 2009
00 AM PEAK HOUR
(00) PM PEAK HOUR

MORELAND-ALTOBELLI ASSOC., INC.
(770) 263-3945

DESIGN BY:
DRAWN BY:
CHECKED BY:
SUPERVISED BY: W. J. SHEEHAN P.E.

EFFINGHAM COUNTY, GEORGIA

REVISION DATES

STATE OF GEORGIA
DEPARTMENT OF TRANSPORTATION
OFFICE: DISTRICT 5

I-16/OLD RIVER ROAD INTERCHANGE
CSNHS-0008-00 (613), PI NO. 0008613
EXISTING YEAR 2009
PEAK HOUR TRAFFIC

DRAWING NO. 10-01

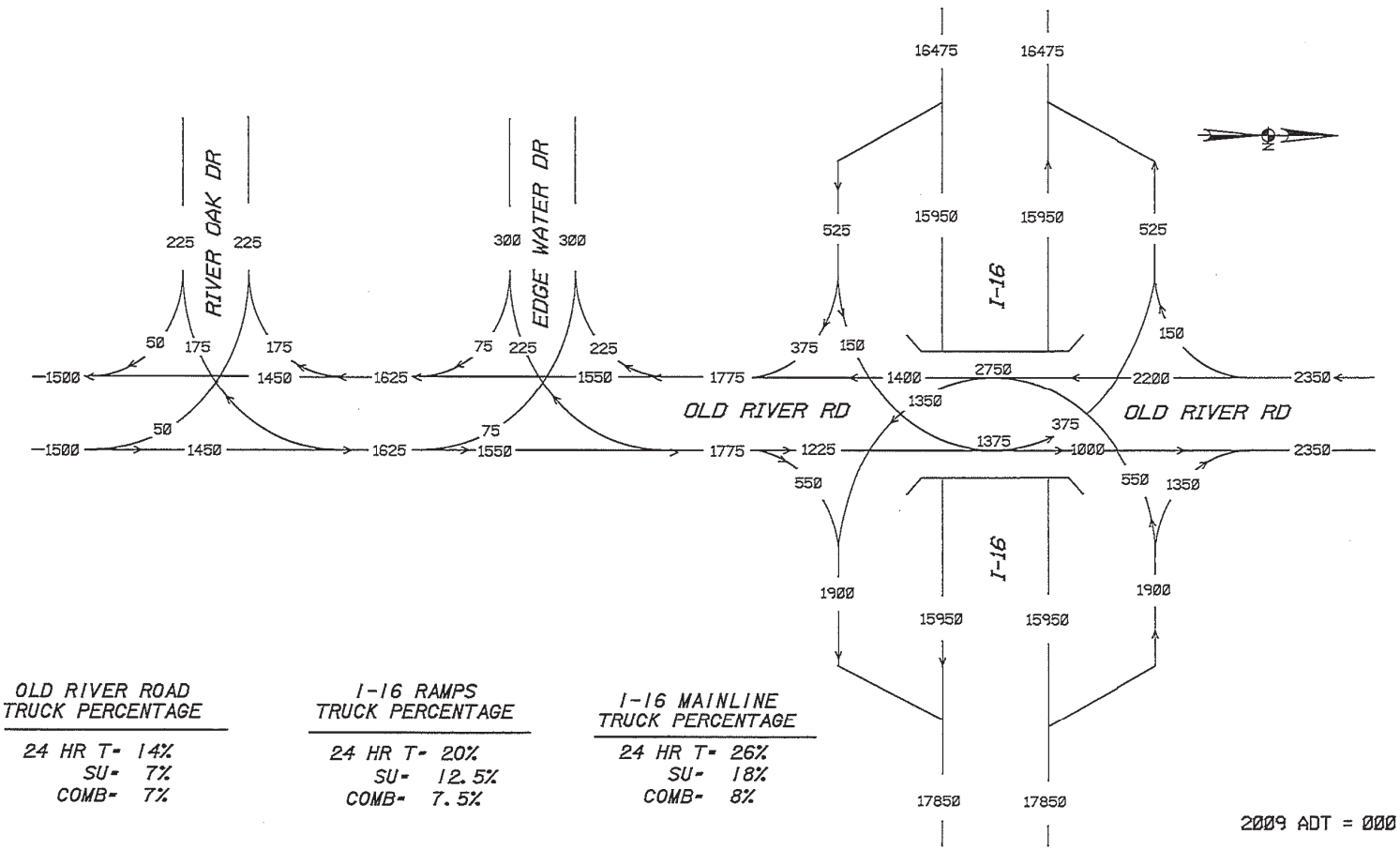

OLD RIVER ROAD TRUCK PERCENTAGE	I-16 RAMPS TRUCK PERCENTAGE	I-16 MAINLINE TRUCK PERCENTAGE
24 HR T- 14%	24 HR T- 20%	24 HR T- 26%
SU- 7%	SU- 12.5%	SU- 18%
COMB- 7%	COMB- 7.5%	COMB- 8%

2009 ADT = 000

MORELAND-ALTOBELLI ASSOC., INC.
(770) 263-5945

DESIGN BY:
DRAWN BY:
CHECKED BY:
SUPERVISED BY: M. J. SHEEHAN P.E.

EFFINGHAM COUNTY, GEORGIA

REVISION DATES

STATE OF GEORGIA
DEPARTMENT OF TRANSPORTATION
OFFICE: DISTRICT 5

I-16/OLD RIVER ROAD INTERCHANGE
CSNHS-0008-00 (613), PI NO. 0008613
EXISTING YEAR 2009
AVERAGE DAILY TRAFFIC

DRAWING NO. 10-02

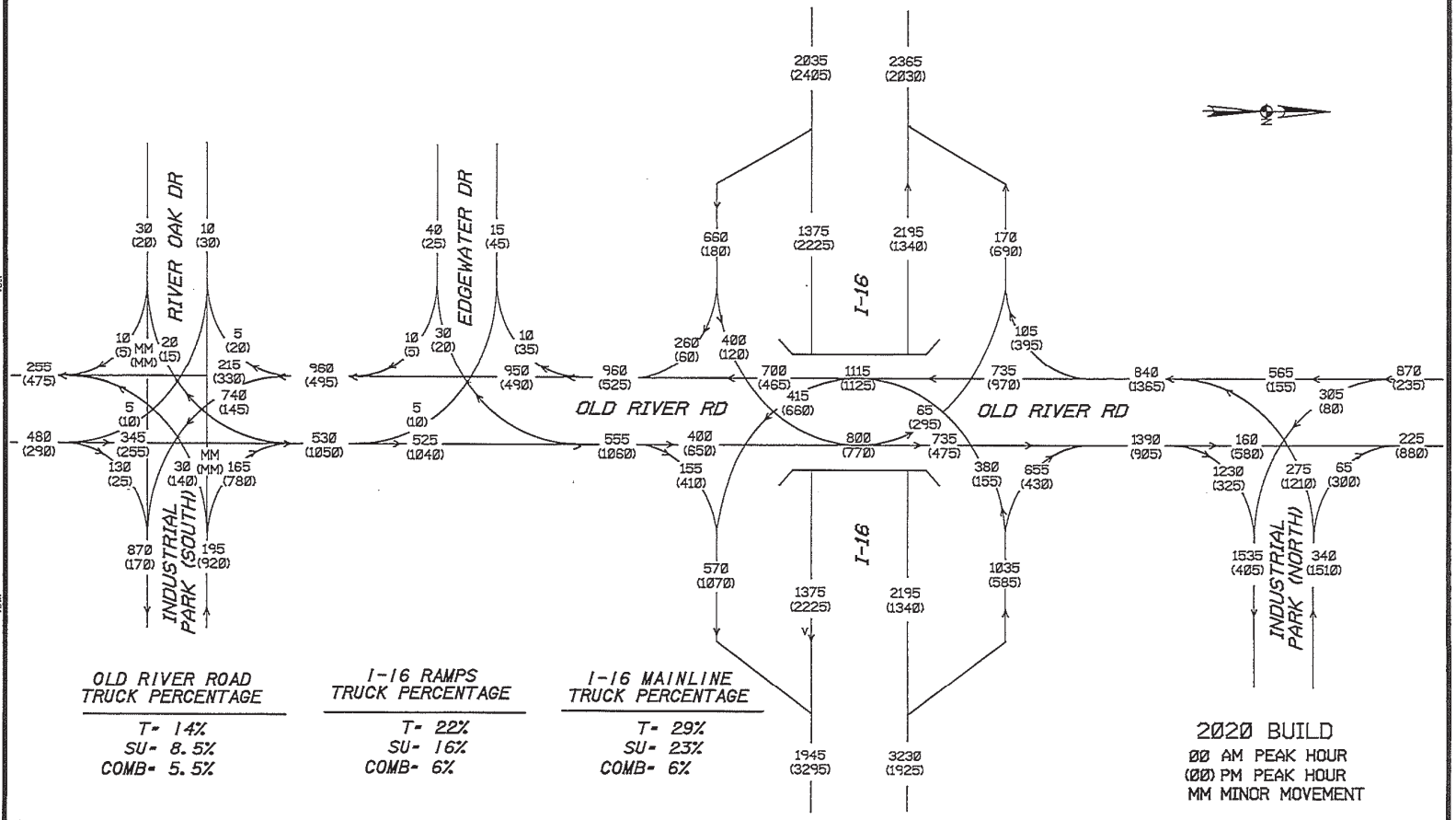

COUNTY	PROJECT NUMBER	SHEET NO.	TOTAL SHEETS		

MORELAND-ALTOBELLI ASSOC., INC.
(770) 253-5945

DESIGN BY:
DRAWN BY:
CHECKED BY:
SUPERVISED BY: M.J. SHEEHAN P.E.

EFFINGHAM COUNTY, GEORGIA

REVISION DATES

STATE OF GEORGIA
DEPARTMENT OF TRANSPORTATION
OFFICE: DISTRICT 5

I-16/OLD RIVER ROAD INTERCHANGE
CSNHS-0008-00 (613), PI NO. 0008613
2020 BUILD PEAK
HOUR DESIGN TRAFFIC

DRAWING NO. 10-03

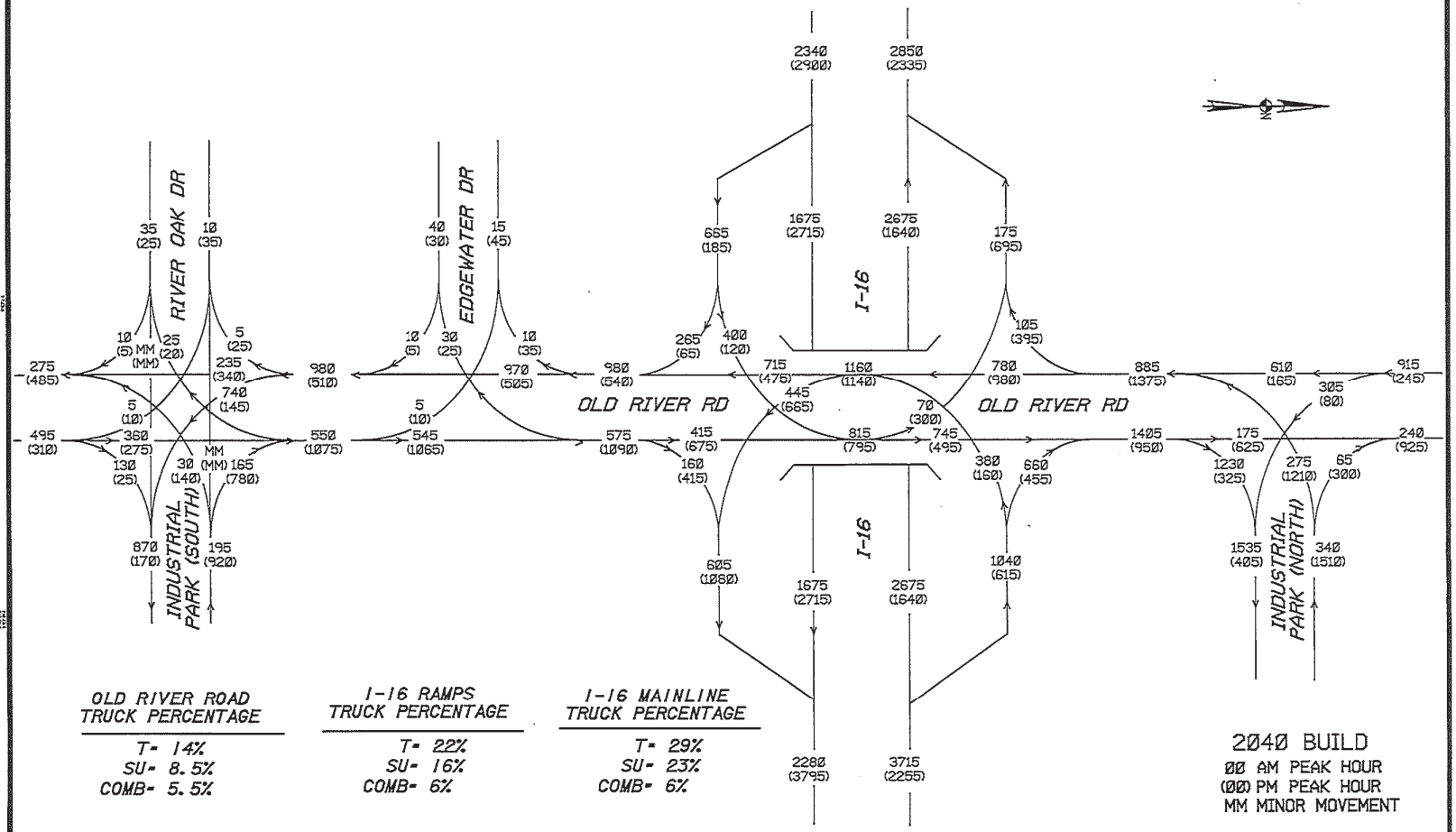

DATE/TIME	FILE	SCALE	DGN	COUNTY	PROJECT NUMBER	SHEET NO.	TOTAL SHEETS
USER							

MORELAND-ALTOBELLI ASSOC., INC.
(770) 263-5945

DESIGN BY:
DRAWN BY:
CHECKED BY:
SUPERVISED BY: W. J. SHEEHAN P.E.

EFFINGHAM COUNTY, GEORGIA

REVISION DATES

STATE OF GEORGIA
DEPARTMENT OF TRANSPORTATION
OFFICE: DISTRICT 5

I-16/OLD RIVER ROAD INTERCHANGE
CSNHS-0008-00 (613), PI NO. 0008613
2040 BUILD PEAK
HOUR DESIGN TRAFFIC

DRAWING NO. 10-04

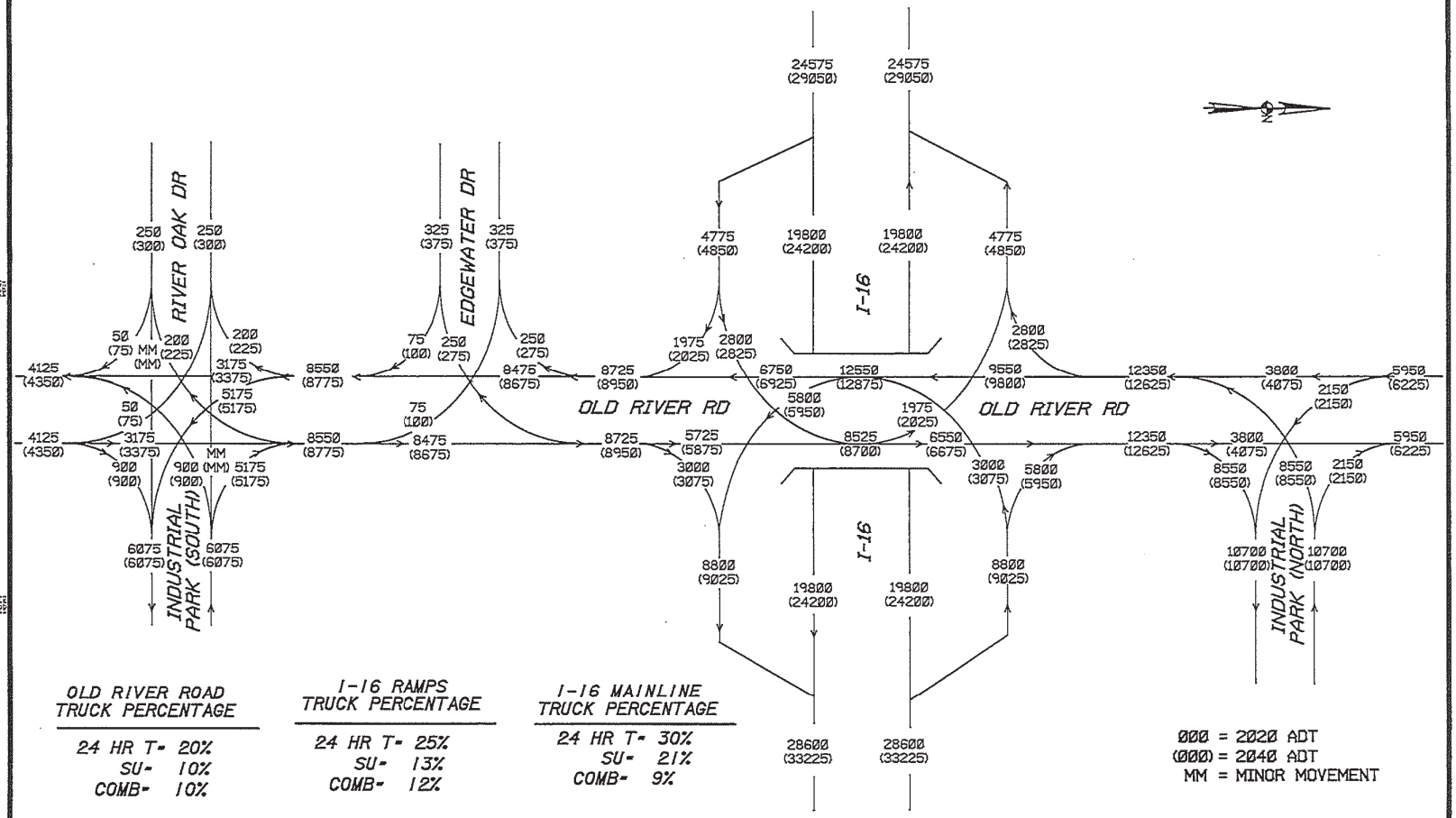

OLD RIVER ROAD TRUCK PERCENTAGE

24 HR T- 20%
SU- 10%
COMB- 10%

I-16 RAMPS TRUCK PERCENTAGE

24 HR T- 25%
SU- 13%
COMB- 12%

I-16 MAINLINE TRUCK PERCENTAGE

24 HR T- 30%
SU- 21%
COMB- 9%

COUNTY	PROJECT NUMBER	SHEET NO.	TOTAL SHEETS

MORELAND-ALTOBELLI ASSOC., INC.
(770) 263-5945

DESIGN BY:
DRAWN BY:
CHECKED BY:
SUPERVISED BY: M. J. SHEEHAN P.E.

EFFINGHAM COUNTY, GEORGIA

REVISION DATES

STATE OF GEORGIA
DEPARTMENT OF TRANSPORTATION
OFFICE: DISTRICT 5

I-16/OLD RIVER ROAD INTERCHANGE
CSNHS-0008-00 (613), PI NO. 0008613
2020/2040 BUILD
AVERAGE DAILY TRAFFIC

DRAWING NO. 10-05

Attachment 7
Capacity analysis summary (tabular format)

Traffic Analysis

Summary of Level of Service Analysis Results

Ref No	Intersection	Existing		No-Build		Build		No-Build		Design Year	
		2009		Year 2020		Year 2020		Year-2040		Year-2040	
		AM	PM	AM	PM	AM	PM	AM	PM	AM	PM
1	Old River Road at I-16 Eastbound Ramps	*B	*B	*F	*F	C	D	*F	*F	C	D
2	Old River Road at I-16 Westbound Ramps	*B	*B	*F	*F	C	C	*F	*F	C	C
3	Old River Road at Industrial Park (North)	NA	NA	*F	*F	A	B	*F	*F	A	B
4	Old River Road at Industrial Park (South)/ River Oak Drive	*A	*A	*F	*F	C	C	*F	*F	C	C
5	Old River Road at Edgewater Drive	*A	*B	*D	*D	*D	*C	*E	*E	*D	*C

For unsignalized intersections, LOS is given for worst case minor street lane.

Attachment 8
Signal Warrant Analysis and Roundabout Analysis

Moreland Altobelli Associates, Inc.

Signal Warrants - Summary

Major Street Approaches

Northbound: **Old River Road**
Number of Lanes: **2**
Approach Speed: **45**
Total Approach Volume: **8,725**

Southbound: **Old River Road**
Number of Lanes: **2**
Approach Speed: **45**
Total Approach Volume: **21,550**

Minor Street Approaches

Eastbound: **I-16 EB Off**
Number of Lanes: **2**

Total Approach Volume: **4,776**

Warrant Summary **(Rural values apply.)**

Warrant 1 - Eight Hour Vehicular Volumes ..... **Satisfied**

Warrant 1A - Minimum Vehicular Volume ..... **Satisfied**
Required volumes reached for 14 hours, 8 are needed

Warrant 1B - Interruption of Continuous Traffic ..... **Satisfied**
Required volumes reached for 14 hours, 8 are needed

Warrant 1 A&B - Combination of Warrants ..... **Satisfied**
Required volumes reached for 13 hours, 8 are needed

Warrant 2 - Four Hour Volumes ..... **Satisfied**
Number of hours (13) volumes exceed minimum >= minimum required (4).

Warrant 3 - Peak Hour ..... **Satisfied**

Warrant 3A - Peak Hour Delay ..... **Not Satisfied**
Total approach volumes and delays on minor street do not exceed minimums for any hour.

Warrant 3B - Peak Hour Volumes ..... **Satisfied**
Volumes exceed minimums for at least one hour.

Warrant 4 - Pedestrian Volumes ..... **Not Satisfied**
Required 4 Hr pedestrian volume reached for 0 hour(s) and the single hour volume for 0 hour(s)

Warrant 5 - School Crossing ..... **Not Satisfied**
Number of gaps > .0 seconds (0) exceeds the number of minutes in the crossing period (0).

Warrant 6 - Coordinated Signal System ..... **Not Satisfied**
No adjacent coordinated signals are present

Warrant 7 - Crash Experience ..... **Not Satisfied**
Number of accidents (0) is less than minimum (5). Volume minimums are met.

Warrant 8 - Roadway Network ..... **Not Satisfied**
Major Route conditions not met. One or more volume requirement met.

Moreland Altobelli Associates, Inc.

Signal Warrants - Summary

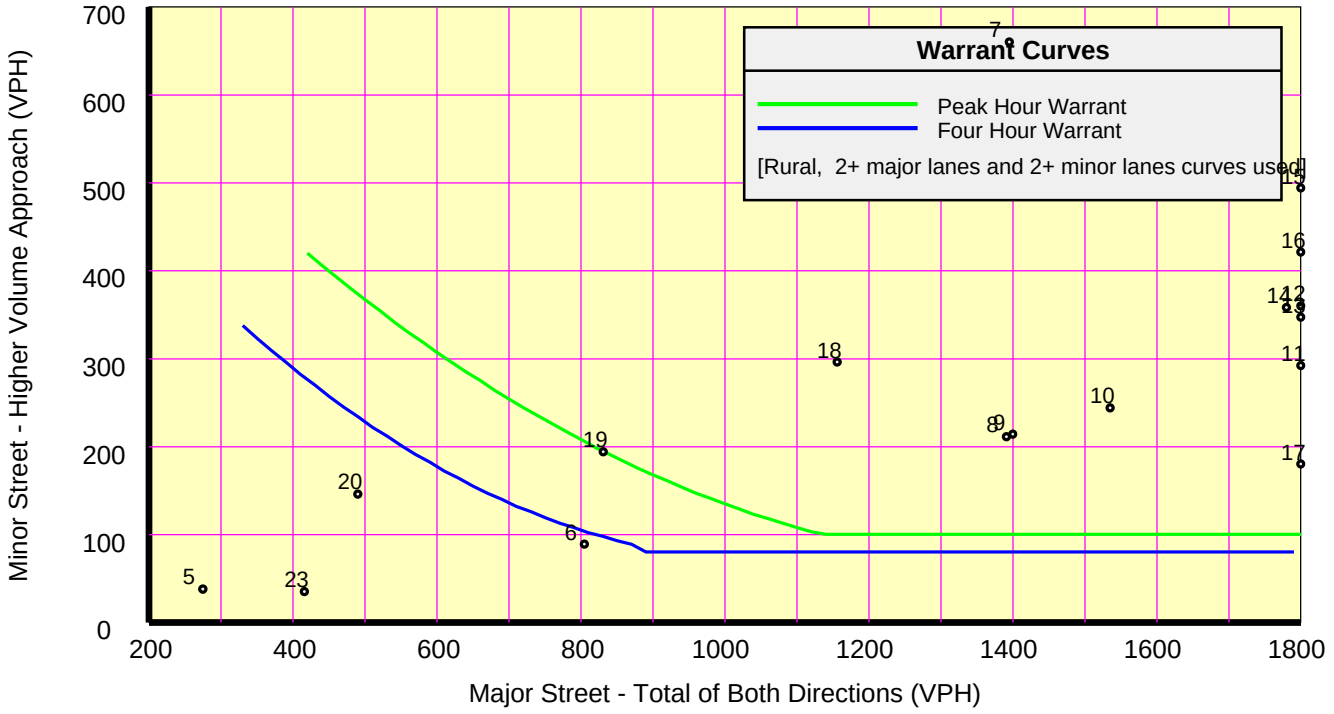

Analysis of 8-Hour Volume Warrants:

Hour	Major	Higher Minor		War-1A			War-1B			War-1A&B		
Begin	Total	Vol	Dir	Major Crit	Minor Crit	Meets?	Major Crit	Minor Crit	Meets?	Major Crit	Minor Crit	Meets?
00:00	26	12	EB	420-No	140-No	---	630-No	70-No	---	504-No	112-No	---
01:00	128	7	EB	420-No	140-No	---	630-No	70-No	---	504-No	112-No	---
02:00	0	6	EB	420-No	140-No	---	630-No	70-No	---	504-No	112-No	---
03:00	47	5	EB	420-No	140-No	---	630-No	70-No	---	504-No	112-No	---
04:00	76	11	EB	420-No	140-No	---	630-No	70-No	---	504-No	112-No	---
05:00	275	38	EB	420-No	140-No	---	630-No	70-No	---	504-No	112-No	---
06:00	805	89	EB	420-Yes	140-No	Major	630-Yes	70-Yes	Both	504-Yes	112-No	Major
07:00	1,395	660	EB	420-Yes	140-Yes	Both	630-Yes	70-Yes	Both	504-Yes	112-Yes	Both
08:00	1,391	211	EB	420-Yes	140-Yes	Both	630-Yes	70-Yes	Both	504-Yes	112-Yes	Both
09:00	1,400	214	EB	420-Yes	140-Yes	Both	630-Yes	70-Yes	Both	504-Yes	112-Yes	Both
10:00	1,535	244	EB	420-Yes	140-Yes	Both	630-Yes	70-Yes	Both	504-Yes	112-Yes	Both
11:00	2,669	292	EB	420-Yes	140-Yes	Both	630-Yes	70-Yes	Both	504-Yes	112-Yes	Both
12:00	3,156	360	EB	420-Yes	140-Yes	Both	630-Yes	70-Yes	Both	504-Yes	112-Yes	Both
13:00	2,069	347	EB	420-Yes	140-Yes	Both	630-Yes	70-Yes	Both	504-Yes	112-Yes	Both
14:00	1,780	358	EB	420-Yes	140-Yes	Both	630-Yes	70-Yes	Both	504-Yes	112-Yes	Both
15:00	4,146	494	EB	420-Yes	140-Yes	Both	630-Yes	70-Yes	Both	504-Yes	112-Yes	Both
16:00	3,824	421	EB	420-Yes	140-Yes	Both	630-Yes	70-Yes	Both	504-Yes	112-Yes	Both
17:00	2,425	180	EB	420-Yes	140-Yes	Both	630-Yes	70-Yes	Both	504-Yes	112-Yes	Both
18:00	1,156	296	EB	420-Yes	140-Yes	Both	630-Yes	70-Yes	Both	504-Yes	112-Yes	Both
19:00	831	194	EB	420-Yes	140-Yes	Both	630-Yes	70-Yes	Both	504-Yes	112-Yes	Both
20:00	490	146	EB	420-Yes	140-Yes	Both	630-No	70-Yes	Minor	504-No	112-Yes	Minor
21:00	78	111	EB	420-No	140-No	---	630-No	70-Yes	Minor	504-No	112-No	---
22:00	157	45	EB	420-No	140-No	---	630-No	70-No	---	504-No	112-No	---
23:00	416	35	EB	420-No	140-No	---	630-No	70-No	---	504-No	112-No	---

Moreland Altobelli Associates, Inc.

Signal Warrants - Summary

Major Street Approaches

Northbound: **Old River Road**
Number of Lanes: **2**
Approach Speed: **45**
Total Approach Volume: **8,725**

Southbound: **Old River Road**
Number of Lanes: **2**
Approach Speed: **45**
Total Approach Volume: **12,350**

Minor Street Approaches

Westbound: **I-16 WB Off**
Number of Lanes: **2**

Total Approach Volume: **8,799**

Warrant Summary **(Rural values apply.)**

Warrant 1 - Eight Hour Vehicular Volumes ..... **Satisfied**

Warrant 1A - Minimum Vehicular Volume ..... **Satisfied**
Required volumes reached for 14 hours, 8 are needed

Warrant 1B - Interruption of Continuous Traffic ..... **Satisfied**
Required volumes reached for 12 hours, 8 are needed

Warrant 1 A&B - Combination of Warrants ..... **Satisfied**
Required volumes reached for 14 hours, 8 are needed

Warrant 2 - Four Hour Volumes ..... **Satisfied**
Number of hours (14) volumes exceed minimum >= minimum required (4).

Warrant 3 - Peak Hour ..... **Satisfied**

Warrant 3A - Peak Hour Delay ..... **Not Satisfied**
Total approach volumes and delays on minor street do not exceed minimums for any hour.

Warrant 3B - Peak Hour Volumes ..... **Satisfied**
Volumes exceed minimums for at least one hour.

Warrant 4 - Pedestrian Volumes ..... **Not Satisfied**
Required 4 Hr pedestrian volume reached for 0 hour(s) and the single hour volume for 0 hour(s)

Warrant 5 - School Crossing ..... **Not Satisfied**
Number of gaps > .0 seconds (0) exceeds the number of minutes in the crossing period (0).

Warrant 6 - Coordinated Signal System ..... **Not Satisfied**
No adjacent coordinated signals are present

Warrant 7 - Crash Experience ..... **Not Satisfied**
Number of accidents (0) is less than minimum (5). Volume minimums are met.

Warrant 8 - Roadway Network ..... **Not Satisfied**
Major Route conditions not met. One or more volume requirement met.

Moreland Altobelli Associates, Inc.

Signal Warrants - Summary

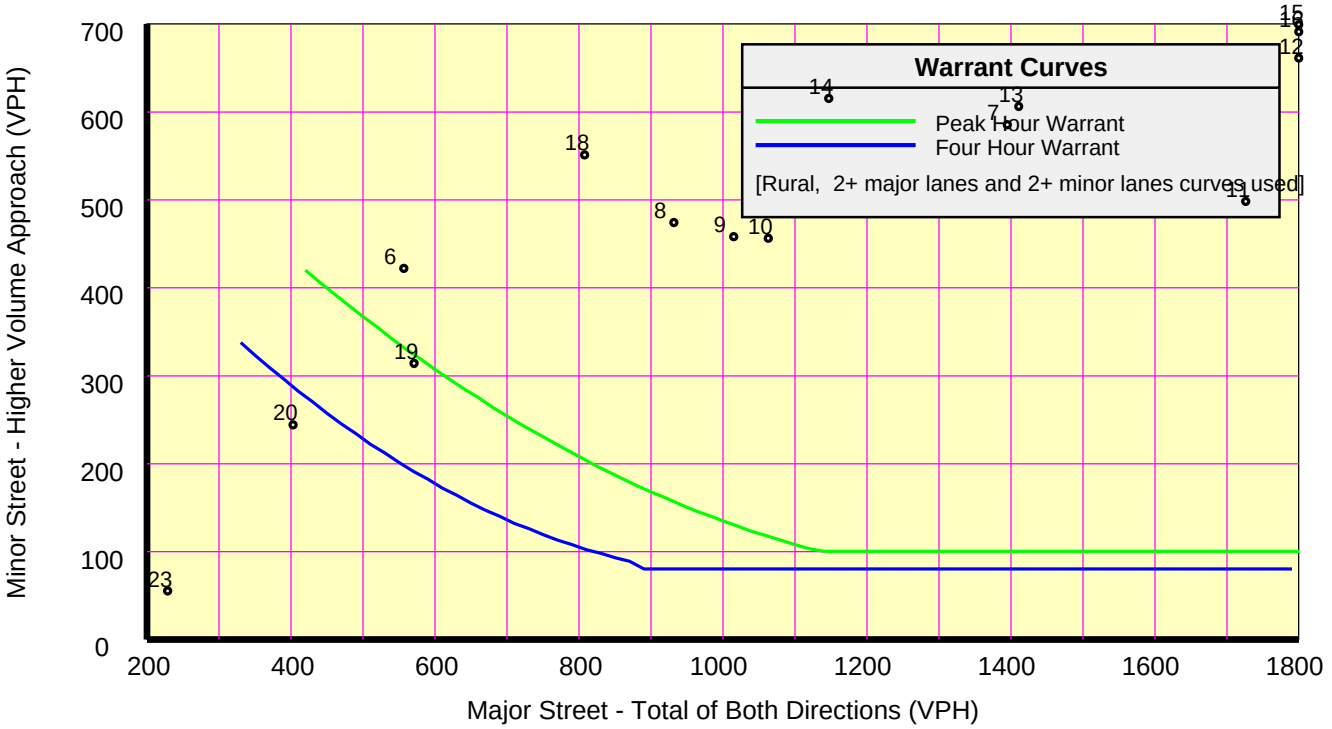

Analysis of 8-Hour Volume Warrants:

Hour	Major	Higher Minor		War-1A			War-1B			War-1A&B		
Begin	Total	Vol	Dir	Major Crit	Minor Crit	Meets?	Major Crit	Minor Crit	Meets?	Major Crit	Minor Crit	Meets?
00:00	14	29	WB	420-No	140-No	---	630-No	70-No	---	504-No	112-No	---
01:00	79	13	WB	420-No	140-No	---	630-No	70-No	---	504-No	112-No	---
02:00	0	6	WB	420-No	140-No	---	630-No	70-No	---	504-No	112-No	---
03:00	47	11	WB	420-No	140-No	---	630-No	70-No	---	504-No	112-No	---
04:00	51	19	WB	420-No	140-No	---	630-No	70-No	---	504-No	112-No	---
05:00	200	103	WB	420-No	140-No	---	630-No	70-Yes	Minor	504-No	112-No	---
06:00	557	422	WB	420-Yes	140-Yes	Both	630-No	70-Yes	Minor	504-Yes	112-Yes	Both
07:00	1,395	585	WB	420-Yes	140-Yes	Both	630-Yes	70-Yes	Both	504-Yes	112-Yes	Both
08:00	932	474	WB	420-Yes	140-Yes	Both	630-Yes	70-Yes	Both	504-Yes	112-Yes	Both
09:00	1,015	458	WB	420-Yes	140-Yes	Both	630-Yes	70-Yes	Both	504-Yes	112-Yes	Both
10:00	1,063	456	WB	420-Yes	140-Yes	Both	630-Yes	70-Yes	Both	504-Yes	112-Yes	Both
11:00	1,726	498	WB	420-Yes	140-Yes	Both	630-Yes	70-Yes	Both	504-Yes	112-Yes	Both
12:00	2,026	661	WB	420-Yes	140-Yes	Both	630-Yes	70-Yes	Both	504-Yes	112-Yes	Both
13:00	1,411	606	WB	420-Yes	140-Yes	Both	630-Yes	70-Yes	Both	504-Yes	112-Yes	Both
14:00	1,147	615	WB	420-Yes	140-Yes	Both	630-Yes	70-Yes	Both	504-Yes	112-Yes	Both
15:00	2,432	699	WB	420-Yes	140-Yes	Both	630-Yes	70-Yes	Both	504-Yes	112-Yes	Both
16:00	2,421	691	WB	420-Yes	140-Yes	Both	630-Yes	70-Yes	Both	504-Yes	112-Yes	Both
17:00	2,425	1,035	WB	420-Yes	140-Yes	Both	630-Yes	70-Yes	Both	504-Yes	112-Yes	Both
18:00	808	551	WB	420-Yes	140-Yes	Both	630-Yes	70-Yes	Both	504-Yes	112-Yes	Both
19:00	571	314	WB	420-Yes	140-Yes	Both	630-No	70-Yes	Minor	504-Yes	112-Yes	Both
20:00	403	244	WB	420-No	140-Yes	Minor	630-No	70-Yes	Minor	504-No	112-Yes	Minor
21:00	41	181	WB	420-No	140-Yes	Minor	630-No	70-Yes	Minor	504-No	112-Yes	Minor
22:00	82	73	WB	420-No	140-No	---	630-No	70-Yes	Minor	504-No	112-No	---
23:00	229	55	WB	420-No	140-No	---	630-No	70-No	---	504-No	112-No	---

I-16 at Old River Road Traffic Signal and Roundabouts Analysis

Traffic Signals

Traffic signal warrant analyses were conducted for the I-16 at Old River Road northbound and southbound ramp terminals, for the open year 2020, based on projected hourly traffic volumes. Both northbound and southbound ramp terminals satisfy Warrants 1a, 1b, 1c, 2, and 3. Other Warrants were not evaluated. See the attached reports.

2040 AM Roundabout Analysis

A planning level roundabout analysis was conducted to evaluate the utility of a roundabout at these two intersections. Traffic volumes for the design year 2040 were used.

Both AM and PM show failing levels of service in the design year.

Results: Approach Measures of Effectiveness								
HCM 2010 Model	**N**		**E**		**S**		**W**	
Lane Designations	*Lane 1*	*Lane 2*	*Lane 1*	*Lane 2*	*Lane 1*	*Lane 2*	*Lane 1*	*Lane 2*
Entry Capacity, veh/h	306	329	632	651	421	443	437	461
Entry Flow Rates, veh/h	408	320	484	480	228	907	172	455
V/C ratio	**1.33**	**0.97**	**0.77**	**0.74**	**0.54**	**2.04**	**0.39**	**0.99**
Control Delay, s/veh	**204.4**	**78.7**	**25.7**	**23.2**	**21.0**	**498.5**	**15.4**	**68.7**
LOS	F	F	D	C	C	F	C	F
95th % Queue (ft)	**618**	**259**	**202**	**162**	**96**	**1582**	**52**	**317**
Approach Delay	149.2		24.4		402.4		54.2	
Approach LOS	F		C		F		F	

Source: Moreland Altobelli Associates, Inc.

2040 PM Roundabout Analysis

Results: Approach Measures of Effectiveness								
HCM 2010 Model	**N**		**E**		**S**		**W**	
Lane Designations	*Lane 1*	*Lane 2*	*Lane 1*	*Lane 2*	*Lane 1*	*Lane 2*	*Lane 1*	*Lane 2*
Entry Capacity, veh/h	316	339	635	654	436	459	470	494
Entry Flow Rates, veh/h	121	85	734	763	136	537	434	753
V/C ratio	**0.38**	**0.25**	**1.16**	**1.17**	**0.31**	**1.17**	**0.92**	**1.52**
Control Delay, s/veh	**20.2**	**15.4**	**110.4**	**113.7**	**13.5**	**125.9**	**53.7**	**267.4**
LOS	C	C	F	F	B	F	F	F
95th % Queue (ft)	**53**	**24**	**681**	**627**	**40**	**497**	**304**	**988**
Approach Delay	18.2		112.1		103.2		189.3	
Approach LOS	C		F		F		F	

Source: Moreland Altobelli Associates, Inc.

Recommendations

- Install traffic signals at both northbound and southbound off ramps

Attachment 9
Bridge Inventory

BRIDGE INVENTORY DATA LISTING GEORGIA DEPARTMENT OF TRANSPORTATION

Structure ID: 103-0034-0 **Effingham** SUFF. RATING 53.29

Location & Geography

*		Structure I.D.No:	103-0034-0
	200	Bridge Information	06
*	6A	Feature Int:	I-16 (SR 404)
*	6B	Critical Bridge:	0
*	7A	Route Number Carried:	CR00310
*	7B	Facility Carried:	OLD RIVER ROAD
*	9	Location:	15 MI S OF GUYTON
	2	DOT District:	5
	207	Year Photo:	2012
*	91	Inspection Frequency:	24 Date: 04/02/2012
	92A	Fract Crit Insp Freq:	00 Date: 02/01/1901
	92B	Underwater Insp Freq:	00 Date: 02/01/1901
	92C	Other Spc. Insp Freq:	00 Date: 02/01/1901
*	4	Place Code:	00000
*	5	Inventory Route (O/U):	1
		Type:	4
		Designation:	1
		Number:	01868
		Direction:	0
*	16	Latitude: 32-07.4872	MMS Prefix:
*	17	Longitude: 81-23.2225	MMS Suffix: MP: 0.00
	98	Border Bridge: 000	%Shared: 00
	99	ID Number: 000000000000000	
*	100	STRAHNET: 0	
	12	Base Highway Network:	1
	13A	LRS Inventory Route:	1032031000
	13B	Sub Inventory Route:	0
*	101	Parallel Structure:	N
*	102	Direction of Traffic:	2
*	264	Road Inventory Mile Post:	001.39
*	208	Inspection Area: 05	Initials: KAS
		Engineer's Initial: eep	

* Location I.D. No.: 103-01868F-001.42N

*	104	Highway System:	0
*	26	Functional Classification:	07
*	204	Federal Route Type:	S No.: 01868
	105	Federal Lands Highway:	0
*	110	Truck Route:	0
	206	School Bus Route:	1
	217	Benchmark Elevation:	0054.61
	218	Datum:	2
*	19	Bypass Length:	19
*	20	Toll:	3
*	21	Maintenance:	01
*	22	Owner:	01
*	31	Design Load:	2
	37	Historical Significance:	5
	205	Congressional District:	12
	27	Year Constructed:	1966
	106	Year Reconstructed:	0000
	33	Bridge Median:	0
	34	Skew:	15
	35	Structure Flared:	0
	38	Navigation Control:	N
	213	Special Steel Design:	0
	267	Type of Paint:	5
*	42	Type of Service on:	1
			1
	214	Movable Bridge:	0
	203	Type Bridge:	D-O-M-O
	259	Pile Encasement:	3
*	43	Structure Type Main:	4 02
	45	No. Spans Main:	004
	44	Structure Type Appr:	0 00
	46	No. Spans Appr:	0000
	226	Bridge Curve Horz:	0 Vert: 0
	111	Pier Protection:	0
	107	Deck Structure Type:	1
	108	Wearing Surface Type:	1
		Me	8
		F	8

Signs & Attachments

	225	Expansion Joint Type:	02
	242	Deck Drains:	1
	243	Parapet Location:	0
		Height:	0.00
		Width:	0.00
	238	Curb:	1.20 1
	239	Handrail:	1 1
*	240	Median Barrier Rail:	0
	241	Bridge Median Height:	0.00
		Width:	0.00
*	230	Guardrail Loc Dir Rear:	3
		Fwrd:	3
		Oppo Dir Rear:	0
		Fwrd:	0
	244	Approach Slab:	3
	224	Retaining Wall:	0
	233	Posted Speed Limit:	45
	236	Warning Sign:	0
	234	Delineator:	1
	235	Hazard Boards:	1
	237	Utilities Gas:	00
		W	00
		Ele	00
		Telephone:	21
		Se	00
	247	Lighting Street:	0
		Naviagtion:	0
		Aerial:	0
*	248	County Continuity No.:	00

BRIDGE INVENTORY DATA LISTING GEORGIA DEPARTMENT OF TRANSPORTATION

Structure ID: 103-0034-0 **Effingham** SUFF. RATING 53.29

Programming Data

201 Project No.: I-16-1 (15) 142 CT.2
202 Plans Available: 4
249 Prop. Proj. No. 0000000000000000
250 Approval Status: 0000
251 P.I. No.: 0000000
252 Contract Date: 02/01/1901
260 Seismic No.: 00000
75 Type Work: 34 1
94 Bridge Imp. Cost: $ 226
95 Roadway Imp. Cost: $ 52
96 Total Imp Cost: $ 376
76 Imp. Length: 000425
97 Imp. Year: 1990
114 Future ADT: 005715 Year: 3930

Hydraulic Data

215 Waterway Data
Highwater Elev.: 0000.0 Year: 1900
Avg. Streambed Elev.: 0000.0 Freq.: 000
Drainage Area: 00000
Area Of Opening: 000000
113 Scour Critical: N
216 Water Depth: 00.0 Br. Height: 00.0
222 Slope Protection: 4
221 Spur Dikes Rear: 0 Fwrd: 0
219 Fender System: 0
220 Dolphin: 0
223 Culvert Cover: 000
Type: 0
No. Barrels: 0
Width: 0.00 Height: 0.00
Length: 0 Apron: 0
* 265 U/W Insp. Area: 0 Diver: ZZZ

* Location I.D. No.: 103-01868F-001.42N

Measurements

* 29 ADT: 003810 Year: 3910
109 % Trucks: 0
* 28 Lanes On: 02 Under: 04
210 No. Tracks On: 00 Under: 00
* 48 Max. Span Length: 0072
* 49 Structure Length: 214
51 Br. Rwdy. Width: 23.90
52 Deck Width: 30.40
* 47 Tot. Horz. Cl: 23.90
50 Curb/Sdewlk Width: 2.00/2.00
32 Approach Rdwy Width: 026
* 229 Shoulder Width:
Rear Lt: 3.00 Type: 2 Rt: 2.40
Fwrd Lt: 2.00 Type: 2 Rt: 3.20
Pavement Width:
Rear: 20.50 Type: 2
Fwrd: 20.50 Type: 2
Intersection Rear: 0 Fwrd: 0
36 Safety Features Br. Rail: 2
Transition: 2
App. G. Rail: 2
App. Rail End: 2
53 Minimum Cl.Over: 99 ' 99 "
Under: H 17 ' 02 "
* 228 Min. Vertical Cl
Act. Odm Dir: 99 ' 99 "
Oppo. Dir: 99 ' 99 "
Posted Odm. Dir: 00 ' 00 "
Oppo. Dir: 00 ' 00 "
55 Lateral Undercl. Rt: H 12.50
56 Lateral Undercl. Lt: 31.00
* 10 Max Min Vert Cl: 99 ' 99 " Dir: 0
39 Nav Vert Cl: 000 Horz: 0000
116 Nav Vert Cl Closed: 000
245 Deck Thickness Main: 7.00
Deck Thick Approach: 0.00
246 Overlay Thickness: 0.00
212 Year Last Painted: Sup: 1995 Sub: 0000

Ratings

65 Inventory Rating Method: 1
63 Inventory Rating Method: 1
66 Inventory Type: 2 Rating: 22
64 Operating Type: 2 Rating: 37
231 Calculated Loads
H-Modified: 21 0
HS-Modified: 23 0
Type 3: 21 0
Type 3s2: 28 0
Timber: 24 0
Piggyback: 33 0
261 H Inventory Rating: 18
262 H Operating Rating: 31
67 Structural Evaluation: 5
58 Deck Condition: 7
59 Superstructure Condition: 8
* 227 Collision Damage: 0
60A Substructure Condition: 7
60B Scour Condition: N
60C Underwater Condition: N
71 Waterway Adequacy: N
61 Channel Protection Cond: N
68 Deck Geometry: 2
69 UnderClr. Horz/Vert: 9
72 Appr. Alignment: 8
62 Culvert: N

Posting Data

70 Bridge Posting Required: 5
41 Struct Open, Posted, Cl: A
* 103 Temporary Structure: 0
232 Posted Loads H-Modified: 00
HS-Modified: 00
Type 3: 00
Type3s2: 00
Timber: 00
Piggyback: 00
253 Notification Date 02/01/1901
253 Fed Notify Date: 02/01/1901 0

Attachment 10
Concept Team Meeting Notes

DEPARTMENT OF TRANSPORTATION
STATE OF GEORGIA
CONCEPT TEAM MEETING NOTES

Project Type:	Exempt	P.I. Number:	0008613
GDOT District:	District 5	County:	Effingham
Federal Route Number:	I-16	State Route Number:	404

Date: February 16, 2012

Attendees:

Name	Phone Number	Title
Michelle Wright	912-271-7562	GDOT Program Delivery Project PM
David Crawley	912-754-8190	Effingham County Administrator
Toss Allen	912-754-8060	Effingham County Engineer
C.R. Jackson	912-871-1103	GDOT District 5 Statesboro Area Engineer
Steve Price	912-427-5756	GDOT District 5 Environmentalist
Brad Saxon	912-427-5715	GDOT District 5 Pre-Construction Engineer
Kaycee Mertz	404-377-0245	GDOT Planning
Jerry Brinson	478-552-6779	Moreland Altobelli
William Dial	912-349-4963	Moreland Altobelli Project PM

1. Michelle Wright opened the meeting and introductions were made.
2. William Dial presented the project and presented a project history, project justification and logical termini were discussed.
3. All items on the attached agenda were discussed. The following items were discussed in detail:
    a. The project currently has right of way acquisition programmed for FY2017. A revised schedule will be submitted to complete the environmental document to comply with the right of way acquisition date. <u>William Dial will modify the schedule.</u>
    b. The current concept shows partial ramp reconstruction with PCC replacing the existing asphalt. Brad Saxon requested that the ramps be completely replaced with PCC all the way to the beginning of the ramp.
    c. Brad Saxon asked if an IMR (Interchange Modification Report) will be required if the ramps are replaced all the way to the Interstate. The consensus opinion was that no IMR would be required. <u>Kaycee Mertz will confirm this. (No IMR is required)</u>
    d. William Dial asked if access rights should be acquired for 1000 feet on each side of the ramp intersections. <u>Kaycee Mertz will confirm this. (Per Brad Saxon, access rights were acquired on each side of the interchange when it was constructed therefore no additional acquisition is required under this project. The exact limits will be determined and added to the construction plans)</u>
    e. The county has no interest in lighting at the proposed intersections.
    f. William Dial will modify the concept report to reflect the 70 MPH speed limit and design speed on I-16.

g. William Dial will setup a meeting with Stephen Thomas, the District 5 Utility Engineer, to discuss the Public Interest Determination. William Dial discussed the project scope and limits with Stephan Thomas and Mr. Thomas determined that a PID is not applicable to this project. E-mail confirmation will be attached to the concept report.
h. All meeting participants were in agreement with not holding a separate CTM. This meeting will serve as the CTM.

DEPARTMENT OF TRANSPORTATION
STATE OF GEORGIA
CONCEPT TEAM MEETING AGENDA

Project Type:	Exempt	P.I. Number:	0008613
GDOT District:	District 5	County:	Effingham
Federal Route Number:	I-16	State Route Number:	404

1. Michelle Wright -- Open the meeting.
2. William Dial (Moreland Altobelli Project Manager) – Present Alternatives
3. Participants will discuss the following aspects of the project:
    - Project Justification
    - Logical Termini
    - Project Background
    - Location of Environmental Resources:
        - Wetland, open waters, streams and all buffers
        - Park Lands
        - Historic Properties
        - Cemeteries
        - Potential Hazardous Waste Sites
        - UST's
        - Threatened and Endangered Species
    - Public Involvement
    - Alternatives considered to date
    - Proposed Design Criteria
    - Horizontal and Vertical Alignment criteria
    - Typical Sections
    - IMR report requirements
    - Access Control
    - Intersection control additions that require permitting (signals)
    - Practical Alternatives Report
    - Type of environmental document anticipated
    - Environmental Permits Required.
    - Project Framework Agreement
    - Right of Way Requirements
        - Potential number of parcels
        - Number of Relocates
        - Estimated Right of Way Cost
        - Who will be responsible for purchasing the right of way
    - Preliminary Bridge Assessments
    - Accident history
    - Potential Soil Conditions Along the project
    - Construction Limits
    - Maintenance of Traffic
    - Existing Maintenance Problems

- Preliminary Capacity Analysis
- Constructability
- Workzone Safety and Mobility Requirements
- Preliminary Cost Estimates
- Project Assignments
- Project Schedule
- ITS Concept of Operations
- Maintenance issues with ITS system
- Utilities
    i. Public Interest Determination
    ii. SUE requirements