ORIGINAL TO GENERAL FILES

DEPARTMENT OF TRANSPORTATION
STATE OF GEORGIA

INTERDEPARTMENT CORRESPONDENCE

FILE P.I. No. 0008301, Taliaferro County
CSSTP-0008-00(301)
CR 82/Bethany Church Road over North Fork Ogeechee River
Bridge Replacement

OFFICE: Program Control

DATE: October 9, 2009

FROM Genetha Rice-Singleton, Program Control Administrator

TO SEE DISTRIBUTION

SUBJECT APPROVED REVISED PROJECT CONCEPT REPORT

Attached for your files is the approval for subject project.

Attachment

DISTRIBUTION:

Ron Wishon
Glenn Bowman
Ken Thompson
Michael Henry
Keith Golden
Anthony Collins
Paul Liles
George Brewer
Alan Smith
BOARD MEMBER

D.O.T. 66

RECEIVED SEP 25 2009

DEPARTMENT OF TRANSPORTATION
STATE OF GEORGIA

INTERDEPARTMENT CORRESPONDENCE

FILE CSSTP-0008-00(301) Taliaferro County
Bridge Replacement at North Fork Ogeechee River
~~over~~ AT CR 82/Bethany Church Road
P.I. 0008301

OFFICE Tennille

DATE 09-11-09

FROM Douglas Alan Smith, District Design Engineer

TO Johnny Quarles, Project Concept Engineer

SUBJECT **REVISED CONCEPT REPORT**

Attached is the original copy of the Revised Concept Report for your further handling for approval in accordance with the Plan Development Process (PDP).

The above mentioned project will consist of the replacement of the structurally deficient bridge on CR 82 over the North Fork Ogeechee River southwest of the City of Crawfordville. The project begins at MP 4.289 on CR 82/Bethany Church Road and ends at MP 4.590. The approaches will consist of two, 11-ft asphalt travel lanes and 5-ft rural shoulders in order to minimize the required right of way. The existing roadway will be closed during construction.

The revised concept as presented herein and submitted for approval is consistent with that which is included in the Regional Transportation Improvement Program (RTP) and/or the State Transportation Improvement Program (STIP).

DATE 9/24/09

Angela T. Alexander
State Transportation Planning Administrator

If any further assistance is needed, please contact me at (478) 552-4642.

DAS:RD

cc: Ron Wishon, Project Review Engineer
Glenn Bowman, State Environment/Location Engineer
Keith Golden, State Traffic Safety and Design Engineer
Angela T. Alexander, State Transportation Planning Administrator
Angela Whitworth, State Transportation Financial Management Administrator

REVISED PROJECT CONCEPT REPORT

Need and Purpose: *The Department of Transportation uses the sufficiency rating to determine if and when a bridge should be replaced. This number reflects the function ability and the structural integrity of the bridge. Once this number falls below 50.00 the bridge is evaluated for replacement. This bridge has a sufficiency rating of 40.77 as of 9-2-07 and is currently load limited which indicates it is structurally deficient and is being considered for replacement.*

The Functional Classification of CR 82 is a Local Road. It is comprised of 1 11-ft travel lane in each direction with 5-ft. grassed shoulders on each side. The horizontal alignment has an approximate 1146-ft. radius curve on the west approach to the bridge and a tangent section on the eastern approach. The vertical grades vary from 1% to 7% with the bridge located in a flat sag section of roadway. This route is traveled by local commuters to and from work, school, and other daily functions.

The logical termini for this project are solely based on the need to replace the bridge. This project does not propose to improve the capacity of the route and will only improve the function ability of the bridge and approaches. Therefore, the logical termini should only be the length of roadway needed in order to improve these items.

Project Location: *This project is located on CR 82/Bethany Church Rd southwest of the City of Crawfordville at North Fork Ogeechee River.*

Description of the approved concept: *This project is the replacement of the structurally deficient bridge on CR 82/Bethany Church Road at North Fork Ogeechee River southwest of the City of Crawfordville. The proposed roadway is 1 12-ft. lane in each direct with 10-ft. grassed shoulders. The proposed design speed on the mainline is 55 MPH, and the proposed maximum grade on the mainline is 7%. The proposed minimum radius of curve is 1060-ft.*

PDP Classification: Major: ☐ Minor: ☒

Federal Oversight: Full Oversight ☐ Exempt ☒ SF ☐ Other ☐

Functional Classification: *Local Road*

U. S. Route Number(s): *None* **State Route Number(s):** *None*
County Road Number(s): *82*

Traffic (AADT) as shown in the approved concept:

Current Year: *2015 (250)* Design Year: *2035 (300)*

Proposed features to be revised:

- *Lane Width*
- *Shoulder Width*

Describe the revised feature(s) to be approved:

Lane Width: This office is requesting to revise the project lane width from 2 12-ft. lanes to 2 11-ft. lanes to match the existing conditions and minimize the purchase of additional right of way. A Design Variance will be required.

Shoulder Width: This office also requests a change in the current approved shoulder width from 10-ft. grassed to 5-ft. grassed. The proposed 5-ft. grassed shoulders meet the Green Book standard for low volume roads and would allow the tie-ins to be closer to the existing right of way.

Updated traffic data (AADT):

Current Year: *2015 (275)* Design Year: *2035 (325)*

Programmed/Schedule:

P.E.: *2007* R/W: *2010* Construction: *LR*

VE Study Required: Yes ☐ No ☒

Revised cost estimates:

1. Construction cost: *$ 1,475,793.58*
2. Right-of-way: *$ 57,000.00*
3. Utilities: *$ 0.00*

Is the project located in a Non-attainment area? ☐ **Yes** ☒ **No**

Recommendation: *The District recommends that the proposed revision to the concept be approved for implementation.*

Concur: _____ for Director
Director of Preconstruction

Approve: _____
Chief Engineer

Attachments:

1. Sketch Map
2. Typical Section
3. Revised Cost Estimates
4. Updated Traffic Counts

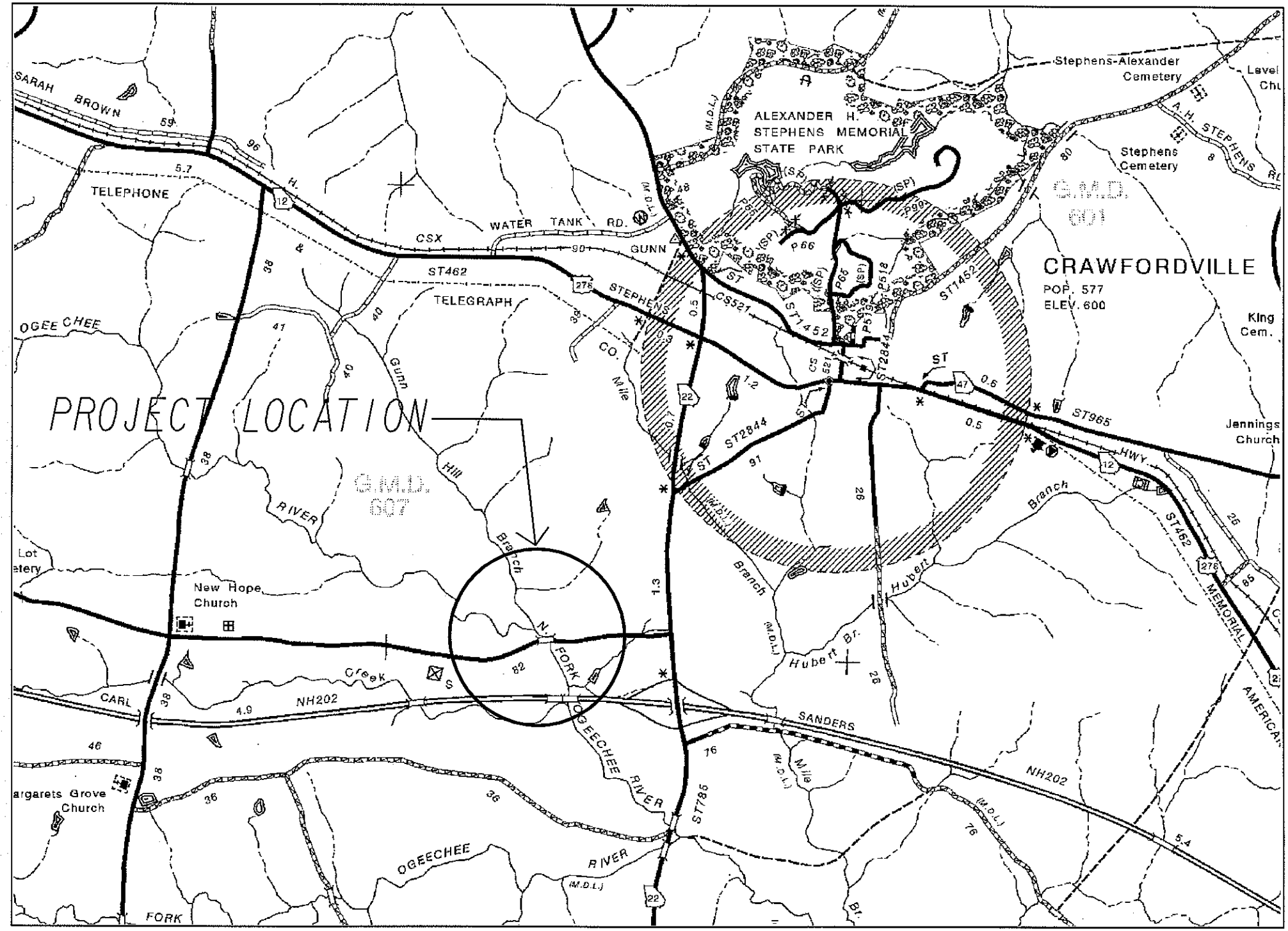

PROJECT LOCATION
CRAWFORDVILLE
POP. 577
ELEV. 600
ALEXANDER H. STEPHENS MEMORIAL STATE PARK
Stephens-Alexander Cemetery
Stephens Cemetery
King Cem.
Jennings Church
G.M.D. 601
G.M.D. 607
SARAH BROWN
TELEPHONE
WATER TANK RD.
GUNN
CSX
ST462
TELEGRAPH
STEPHENS
CS521
ST1452
ST2844
ST965
HWY
ST462
MEMORIAL
AMERICAN
OGEE CHEE
RIVER
Gunn
Hill
Branch
Mile
CO.
New Hope Church
N. FORK
OGEECHEE RIVER
Creek
CARL
NH202
SANDERS
Hubert Br.
Hubert
Branch
Mile
ST785
OGEECHEE
RIVER
FORK
argarets Grove Church
Lot
etery

DATETIME$$$	TIME$$$	PRF	DGN	COUNTY	PROJECT NUMBER
$USER$		$$PENTABLE$$		TALIAFERRO	CSBRG-0008-00 (301)

*** STANDARD CROSS - SLOPE MAY BE VARIED - AS DIRECTED BY THE ENGINEER - TO BEST FIT THE EXISTING ROADWAY AS PER SECTION 149 OF THE STANDARD SPECIFICATIONS. SEE "ALLOWABLE RANGES TABLE" BELOW.

ALLOWABLE RANGES TABLE

FOR THIS PROJECT, CROSS SLOPES THAT ARE ADJUSTED TO "BEST FIT" EXISTING PAVEMENT SLOPES ARE SUBJECT TO THE FOLLOWING LIMITS:

A: NORMAL CROWN

SECTION WITH GRADES 0.5% OR GREATER	SECTION WITH GRADES 0.5% OR LESS
0.0150 FT/FT - MINIMUM	0.0156 FT/FT - MINIMUM
0.0208 FT/FT - DESIRABLE	0.0208 FT/FT - DESIRABLE
0.0250 FT/FT - MAXIMUM	0.0300 FT/FT - MAXIMUM

B: SUPERELEVATION RATE

S.E. RATE SHOWN ON PLANS OR S.E. RATE EXISTING IN FIELD (WHICHEVER IS GREATER)

C: SUPERELEVATION TRANSITION LENGTH (LENGTH FROM FLAT TO FULL S.E.)

	RATE OF CHANGE	CORRESPONDING DIFFERENCE IN GRADE BETWEEN PIVOT POINT AND EDGE OF PAVEMENT
MINIMUM	1:150	0.67%
DESIRABLE	1:200	0.50%
MAXIMUM	1:300	0.33%

*LENGTH SHALL BE SET TO AVOID CREATING A FLAT GUTTER GRADE ON LOW SIDE AND TO AVOID FLAT CROSS - SLOPES AT OR NEAR THE LOW POINT OF VERTICAL CURVES.

D: POSITIONING OF SUPERELEVATION TRANSITION LENGTH ON SIMPLE CURVES

50% OF TRANSITION INSIDE CURVE - MAXIMUM
33% OF TRANSITION INSIDE CURVE - DESIRABLE
20% OF TRANSITION INSIDE CURVE - MINIMUM

NOTE: CROWN WIPE OUT SHALL BE AT THE SAME RATE AS THE S.E. TRANSITION.

E: SMOOTHING OF BREAKS IN EDGE PROFILE AT BEGIN AND END OF TRANSITION SHALL BE ACCOMPLISHED BY VERTICAL CURVE WITH A MINIMUM LENGTH (IN FEET) EQUAL TO THE SPEED DESIGN (IN MPH).

SLOPE CONTROLS#		
SLOPE	CUT	FILL
4:1	0-6'	0-10'
2:1	OVER 6'	OVER 10'

GUARDRAIL REQUIRED ON FILL SECTIONS WITH SLOPES STEEPER THAN 4:1

A	135 LBS/SQ. YD. REC. ASPH. CONC. 9.5mm, SUPERPAVE TP 1, GP 1 BLEND 1, INCL. BITUM. MATERIAL & H LIME
B	220 LBS/SQ. YD. REC. ASPH. CONC. 19mm, SUPERPAVE, GP 1 OR 2, INCL. BITUM. MATERIAL & H LIME
C	770 LBS/SQ. YD. RECYCLED ASH. CONC. 25mm, SUPERPAVE
D	10" GRADED AGGREGATE BASE
E	REC. ASPH. CONC. LEVELING, INCL. BITUM. MATERIAL

△ SLOPE 6.00% OR RATE OF S.E. WHICHEVER IS GREATER
□ SLOPE AS FOLLOWS:
S.E. RATE OF 2% OR LESS USE 6%
S.E. RATE OF 3%, USE 5%
S.E. RATE OF 4%, USE 4%
S.E. RATE OF 5%, USE 3%
S.E. RATE OF 7%, USE 1%
ALGEBRAIC DIFFERENCE IN PAVING & SHOULDER SLOPES NOT TO EXCEED 8%

TS #1 - TANGENT SECTION

THIS SECTION APPLIES FROM:

STATION 101+00.00 TO STATION 101+50.00
STATION 117+00.00 TO STATION 117+75.00

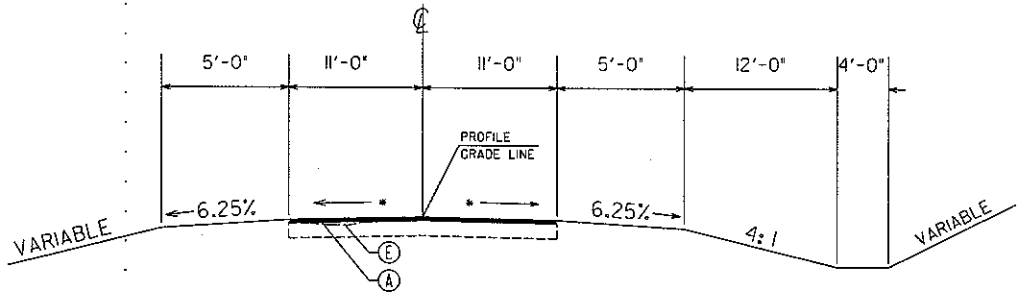

* SEE ALLOWABLE RANGES TABLE

TS #2 - TANGENT SECTION

THIS SECTION APPLIES FROM:

STATION 101+50.00 TO STATION 104+02.81
STATION 108+16.80 TO STATION 117+00.00

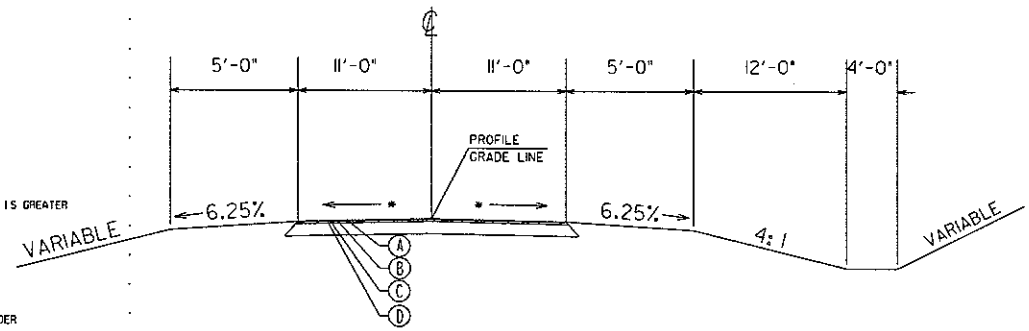

* SEE ALLOWABLE RANGES TABLE

GEORGIA
DEPARTMENT OF TRANSPORTATION

NO SCALE

REVISION DATES

STATE OF GEORGIA
DEPARTMENT OF TRANSPORTATION
OFFICE: DISTRICT 2-TENNILLE
TYPICAL SECTIONS

CSBRG-0008-00 (301)
TALIAFERRO CO.

DRAWING No. 5-1

DATETIME$$$	TIME$$$	PRF	DGN	COUNTY	PROJECT NUMBER
$USER$		$$PENTABLE$$		TALIAFERRO	CSBRG-0008-00 (301)

SLOPE CONTROLS#		
SLOPE	CUT	FILL
4:1	0-6'	0-10'
2:1	OVER 6'	OVER 10'

GUARDRAIL REQUIRED ON FILL SECTIONS WITH SLOPES STEEPER THAN 4:1

SEE DETAIL 38-1 FOR ALL SUPERELEVATION INFORMATION.

TS #3 - SUPERLEVATED SECTION

THIS SECTION APPLIES FROM:

STATION 104+02.81 TO STATION 108+16.80

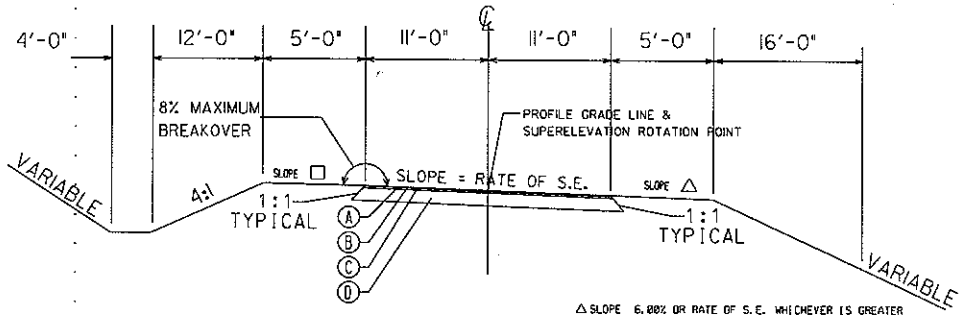

△ SLOPE 6.00% OR RATE OF S.E. WHICHEVER IS GREATER

□ SLOPE AS FOLLOWS:

S.E. RATE OF 2% OR LESS USE 6%
S.E. RATE OF 3%, USE 5%
S.E. RATE OF 4%, USE 4%
S.E. RATE OF 5%, USE 3%
S.E. RATE OF 7%, USE 1%

ALGEBRAIC DIFFERENCE IN PAVING & SHOULDER SLOPES NOT TO EXCEED 8%

DRIVEWAY TYPICAL SECTION

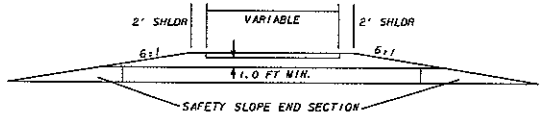

RESIDENTIAL DRIVEWAYS
ASPHALT DRIVES WILL BE PAVED WITH THE FOLLOWING:
135 lbs/yd² RECYC. ASPH. CONC. 9.5 mm SUPERPAVE
220 lbs/yd² RECYC. ASPH. CONC. 19 mm SUPERPAVE

COMMERCIAL DRIVEWAYS
ASPHALT DRIVES WILL BE PAVED WITH THE FOLLOWING:
135 lbs/yd² RECYC. ASPH. CONC. 9.5 mm SUPERPAVE
440 lbs/yd² RECYC. ASPH. CONC. 19 mm SUPERPAVE

CONCRETE DRIVEWAYS
COMMERCIAL DRIVES - 8" CONCRETE
RESIDENTIAL DRIVES - 6" CONCRETE

NOTE: ALL DRIVES SHALL BE PAVED TO THE RIGHT OF WAY OR TO THE TIE-IN POINT, WHICHEVER IS GREATER.

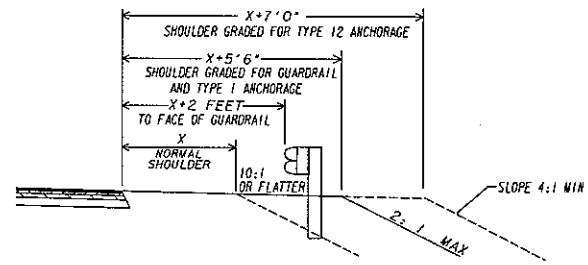

SHOULDER DETAIL FOR GUARDRAIL

SEE PLAN FOR LOCATION

A	135 LBS/SQ. YD. REC. ASPH. CONC. 9.5mm, SUPERPAVE TP 1, GP 1 BLEND 1, INCL. BITUM. MATERIAL & H LIME
B	220 LBS/SQ. YD. REC. ASPH. CONC. 19mm, SUPERPAVE, GP 1 OR 2, INCL. BITUM. MATERIAL & H LIME
C	770 LBS/SQ. YD. RECYCLED ASH. CONC. 25mm, SUPERPAVE
D	10" GRADED AGGREGATE BASE
E	REC. ASPH. CONC. LEVELING, INCL. BITUM. MATERIAL

GEORGIA
DEPARTMENT OF TRANSPORTATION

NO SCALE

REVISION DATES

STATE OF GEORGIA
DEPARTMENT OF TRANSPORTATION
OFFICE: DISTRICT 2-TENNILLE
TYPICAL SECTIONS
CSBRG-0008-00 (301)
TALIAFERRO CO.

DRAWING NO. 5-2

Estimate Report for file "0008301_2009-09-03"

Section ROADWAY

Item Number	Quantity	Units	Unit Price	Item Description	Cost
150-1000	1	LS	25000.00	TRAFFIC CONTROL - CSBRG-0008-00 (301)	25000.00
201-1500	1	LS	25000.00	CLEARING & GRUBBING - CSBRG-0008-00 (301)	25000.00
205-0001	2300	CY	2.47	UNCLASS EXCAV	5681.00
206-0002	33403	CY	2.98	BORROW EXCAV, INCL MATL	99540.94
310-1101	2084	TN	17.04	GR AGGR BASE CRS, INCL MATL	35511.36
318-3000	350	TN	21.39	AGGR SURF CRS	7486.50
402-1812	12	TN	66.70	RECYCLED ASPH CONC LEVELING, INCL BITUM MATL & H LIME	800.40
402-3100	277	TN	68.90	RECYCLED ASPH CONC 9.5 MM SUPERPAVE, TYPE I, GP 1 OR BLEND 1, INCL BITUM MATL & H LIME	19085.30
402-3121	1459	TN	59.47	RECYCLED ASPH CONC 25 MM SUPERPAVE, GP 1 OR 2, INCL BITUM MATL & H LIME	86766.73
402-3190	417	TN	67.77	RECYCLED ASPH CONC 19 MM SUPERPAVE, GP 1 OR 2,INCL BITUM MATL & H LIME	28260.09
413-1000	330	GL	2.00	BITUM TACK COAT	660.00
433-1200	230	SY	160.24	REINF CONC APPROACH SLAB, INCL SLOPED EDGE	36855.20
441-0301	2	EA	2038.55	CONC SPILLWAY, TP 1	4077.10
500-3101	1	CY	238.02	CLASS A CONCRETE	238.02
550-2180	88	LF	33.24	SIDE DRAIN PIPE, 18 IN, H 1-10	2925.12
550-3618	4	EA	507.64	SAFETY END SECTION 18 IN, SIDE DRAIN, 6:1 SLOPE	2030.56
576-1018	40	LF	32.32	SLOPE DRAIN PIPE, 18 IN	1292.80
634-1200	5	EA	93.93	RIGHT OF WAY MARKERS	469.65
641-1100	84	LF	52.35	GUARDRAIL, TP T	4397.40
641-1200	684	LF	17.89	GUARDRAIL, TP W	12236.76
641-5001	2	EA	673.15	GUARDRAIL ANCHORAGE, TP 1	1346.30
641-5012	2	EA	1762.58	GUARDRAIL ANCHORAGE, TP 12	3525.16
643-8200	375	LF	2.21	BARRIER FENCE (ORANGE), 4 FT	828.75
				Section Sub Total:	**$404,015.14**

Section EROSION CONTROL

Item Number	Quantity	Units	Unit Price	Item Description	Cost
603-2181	1100	SY	34.43	STN DUMPED RIP RAP, TP 3, 18 IN	37873.00
603-7000	1100	SY	3.80	PLASTIC FILTER FABRIC	4180.00
700-6910	5	AC	674.07	PERMANENT GRASSING	3370.35
700-7000	5	TN	60.51	AGRICULTURAL LIME	302.55
700-7010	12	GL	20.53	LIQUID LIME	246.36
700-8000	5	TN	409.57	FERTILIZER MIXED GRADE	2047.85
700-8100	229	LB	2.30	FERTILIZER NITROGEN CONTENT	526.70
710-9000	1225	SY	1.99	PERMANENT SOIL REINFORCING MAT	2437.75
716-2000	4100	SY	0.95	EROSION CONTROL MATS, SLOPES	3895.00
				Section Sub Total:	**$54,879.56**

Section TEMPORARY EROSION CONTROL

Item Number	Quantity	Units	Unit Price	Item Description	Cost
163-0232	3	AC	283.37	TEMPORARY GRASSING	850.11
163-0240	69	TN	129.90	MULCH	8963.10
163-0300	2	EA	1148.70	CONSTRUCTION EXIT	2297.40
163-0502	470	EA	399.64	CONSTRUCT AND REMOVE SILT CONTROL GATE, TP 2	187830.80
163-0503	29	EA	442.20	CONSTRUCT AND REMOVE SILT CONTROL GATE, TP 3	12823.80
163-0530	500	LF	2.42	CONSTRUCT AND REMOVE BALED STRAW	1210.00

				EROSION CHECK	
165-0030	1350	LF	0.66	MAINTENANCE OF TEMPORARY SILT FENCE, TP C	891.00
165-0040	29	EA	56.18	MAINTENANCE OF EROSION CONTROL CHECKDAMS/DITCH CHECKS	1629.22
165-0050	280	LF	2.45	MAINTENANCE OF SILT RETENTION BARRIER	686.00
165-0070	250	LF	2.83	MAINTENANCE OF BALED STRAW EROSION CHECK	707.50
165-0101	2	EA	481.34	MAINTENANCE OF CONSTRUCTION EXIT	962.68
167-1000	2	EA	460.30	WATER QUALITY MONITORING AND SAMPLING	920.60
167-1500	9	MO	685.80	WATER QUALITY INSPECTIONS	6172.20
170-2000	560	LF	8.24	STAKED SILT RETENTION BARRIER	4614.40
171-0030	2700	LF	2.95	TEMPORARY SILT FENCE, TYPE C	7965.00
				Section Sub Total:	**$238,523.81**

Section TRAFFIC SIGNS AND MARKING

Item Number	Quantity	Units	Unit Price	Item Description	Cost
636-1020	14	SF	16.67	HIGHWAY SIGNS, TP 1 MATL, REFL SHEETING, TP 3	233.38
636-1033	25	SF	20.24	HIGHWAY SIGNS, TP 1 MATL, REFL SHEETING, TP 9	506.00
636-2070	83	LF	8.71	GALV STEEL POSTS, TP 7	722.93
652-5451	3078	LF	0.20	SOLID TRAFFIC STRIPE, 5 IN, WHITE	615.60
652-5452	3078	LF	0.15	SOLID TRAFFIC STRIPE, 5 IN, YELLOW	461.70
657-1054	272	LF	3.63	PREFORMED PLASTIC SOLID PVMT MKG, 5 IN, WHITE, TP PB	987.36
657-6054	272	LF	3.58	PREFORMED PLASTIC SOLID PVMT MKG, 5 IN, YELLOW, TP PB	973.76
				Section Sub Total:	**$4,500.73**

Section BRIDGE

Item Number	Quantity	Units	Unit Price	Item Description	Cost
540-1101	1	LS	179520.00	REMOVAL OF EXISTING BRIDGE (136FT-24FT-55)	179520.00
543-1001	1	Lump Sum	342720.00	CONSTRUCTION OF BRIDGE (136FT-28FT-90.00)	342720.00
603-2024	250	SY	45.91	STN DUMPED RIP RAP, TP 1, 24 IN	11477.50
603-7000	250	SY	3.80	PLASTIC FILTER FABRIC	950.00
				Section Sub Total:	**$534,667.50**

Total Estimated Cost: $1,236,586.74

Subtotal Construction Cost	**$1,236,586.74**
Engineering & Inspection 5 %	$61,829.34
Construction Contingency 4%	$49,463.47
Fuel Price Adjustment	$127,914.03
Total Construction Cost	**$1,475793.58**
Right Of Way	$0.00
ReImb. Utilities	$0.00
Grand Total Project Cost	**$1,475,793.58**

DEPARTMENT OF TRANSPORTATION
STATE OF GEORGIA

INTERDEPARTMENT CORRESPONDENCE

FILE CSBRG-0008-00 (301) Taliaferro County
P.I. No. 0008301

OFFICE Tennille

DATE September 11, 2009

FROM Jack D. Cooper, Jr.
District Utilities Engineer

TO George Brewer, District Preconstruction Engineer
ATTN Renee Decker

SUBJECT PRELIMINARY UTILITY COST (ESTIMATE)

As requested by your office, we are furnishing you with a Preliminary Utility Cost estimates for each utility with facilities potentially located within the project limits.

FACILITY OWNER	NON-REIMBURSABLE	REIMBURSABLE
Rayle EMC	$ .00	$ .00
Wilkes Telephone Co.	$ .00	$ .00
Total	$ .00	$ .00
30% Utilities Contingency:	$ .00	$ .00
Total Non/Reimbursement Cost:	$ .00	$ .00

Total Non/Reimbursable cost for the above project is $.00

If you have any questions, please contact Jeanie Wheeler at 478-552-4638.

JDC/JEW

C: Jeff Baker, State Utilities Engineer;
Jamie Simpson, Office of Financial Management;
Bryan Gibbs, Area Engineer

Preliminary Right of Way Cost Estimate

Phil Copeland
Right of Way Administrator
By: LaShone Alexander

Date: July 9, 2009
Project: CRBG-0008-00(301) Taliaferro County **P.I. Number:** 0008301
Existing/Required R/W: Varies/Varies **No. Parcels: 8**
Project Termini : Bridge Replacement
Project Description: Bridge Replacement CR 82 over North Fork Ogeechee River

Land:	Required Residential/Agricultural RW 0.452 acres @ $30,000/acre	$	13,560.00
	Permanent Easement 0.295 acres @ $ 30,000/acre x50%	$	4,425.00
		$	**17,985.00**
Improvements :	landscaping, misc. site improvements	$	5,000.00
Relocation:	Commercial (0) Residential (0)	$	0.00
Damage :	Proximity (0)	$	0.00
	Net Cost	$	22,985.00

Net Cost		$	22,985.00
Scheduling Contingency	55 %		12,641.00
Adm/Court Cost	60 %		21,376.00
		$	**57,002.00**

Total Cost $57,000.00

Note: The Market Appreciation (40%) is not included in the updated Preliminary Cost Estimate.

Department of Transportation
State of Georgia

INTERDEPARTMENT CORRESPONDENCE

FILE CSBRG-0008-00(301)
Taliaferro County
P.I. # 0008301

OFFICE Environment/Location

DATE January 25, 2007

FROM Harvey D. Keepler, State Environmental/Location Engineer

TO Michael L. Thomas, P.E., District Engineer
Attn. Alan Smith

SUBJECT Traffic Assignments for C.R. 82/Bethany Church Road @ North Fork Ogeechee River.

We are furnishing estimated traffic assignments for the above project is attached:

TC 0167
2006 AADT = 200
2015 AADT = 250
2035 AADT = 300
K = 11%
D = 60%
T = 8%
24 HOUR T = 10%
S.U. = 7%
COMB. = 3 %

If you have any questions concerning this information please contact Shelley Nweke at (404) 699-4458.

HDK/NSN