ORIGINAL TO GENERAL FILES

DEPARTMENT OF TRANSPORTATION
STATE OF GEORGIA

OFFICE OF DESIGN POLICY & SUPPORT
INTERDEPARTMENTAL CORRESPONDENCE

FILE P.I. # 0007174
CSBRG-0007-00(174)
Fulton County
GDOT District 7 - Metro Atlanta
SR 3 @ Peachtree Creek
Bridge Replacement

OFFICE Design Policy & Support

DATE 3/20/2015

FROM for Brent Story, State Design Policy Engineer

TO SEE DISTRIBUTION

SUBJECT **APPROVED CONCEPT REPORT**

Attached is the approved Concept Report for the above subject project.

Attachment

DISTRIBUTION:

Glenn Bowman, Director of Engineering
Joe Carpenter, Director of P3/Program Delivery
Genetha Rice-Singleton, Assistant Director of P3/Program Delivery
Albert Shelby, State Program Delivery Engineer
Bobby Hilliard, Program Control Administrator
Cindy VanDyke, State Transportation Planning Administrator
Hiral Patel, State Environmental Administrator
Ben Rabun, State Bridge Engineer
Andrew Heath, State Traffic Engineer
Angela Robinson, Financial Management Administrator
Lisa Myers, State Project Review Engineer
Charles "Chuck" Hasty, State Materials Engineer
Mike Bolden, State Utilities Engineer
Richard Cobb, Statewide Location Bureau Chief
Andy Casey, State Roadway Design Engineer
Attn: Chris Sheahan, Design Group Manager
Kathy Zahul, District Engineer
Scott Lee, District Preconstruction Engineer
Patrick Allen, District Utilities Engineer
Carlton Fisher, Project Manager
BOARD MEMBER - 5th Congressional District

DEPARTMENT OF TRANSPORTATION
STATE OF GEORGIA
PROJECT CONCEPT REPORT

Project Type:	Bridge Replacement	P.I. Number:	0007174
GDOT District:	7	County:	Fulton
Federal Route Number:	41	State Route Number:	3
		Project Number:	CSBRG-0007-00(174)

State Route 3 Bridge Replacement over Peachtree Creek

Submitted for approval:

C. Andy Carr — 12/19/14
State Roadway Design Engineer — DATE

Albert V. Shelby III — 1-5-15
State Program Delivery Engineer — DATE

[illegible] — 12-29-14
GDOT Project Manager — DATE

* Recommendation on file.

Recommendation for approval:

Program Control Administrator — DATE

* Hiral Patel / KLP — 1-15-15
State Environmental Administrator — DATE

* Kathy Zahul / KLP — 1-7-15
State Traffic Engineer — DATE

* Lisa Myers / KLP — 1-8-15
Project Review Engineer — DATE

* for Yulonda Pride-Foster / KLP — 1-6-15
State Utilities Engineer — DATE

* Rachel Brown / KLP — 1-13-15
District 7 Engineer — DATE

* Ben Rabun / KLP — 1-8-15
State Bridge Design Engineer — DATE

State Transportation Financial Management Administrator — DATE

The concept as presented herein and submitted for approval is consistent with that which is included in the Regional Transportation Plan (RTP) and/or the State Transportation Improvement Program (STIP).

Cynthia L. Vanadore — 1-7-15
State Transportation Planning Administrator — DATE

PROJECT LOCATION

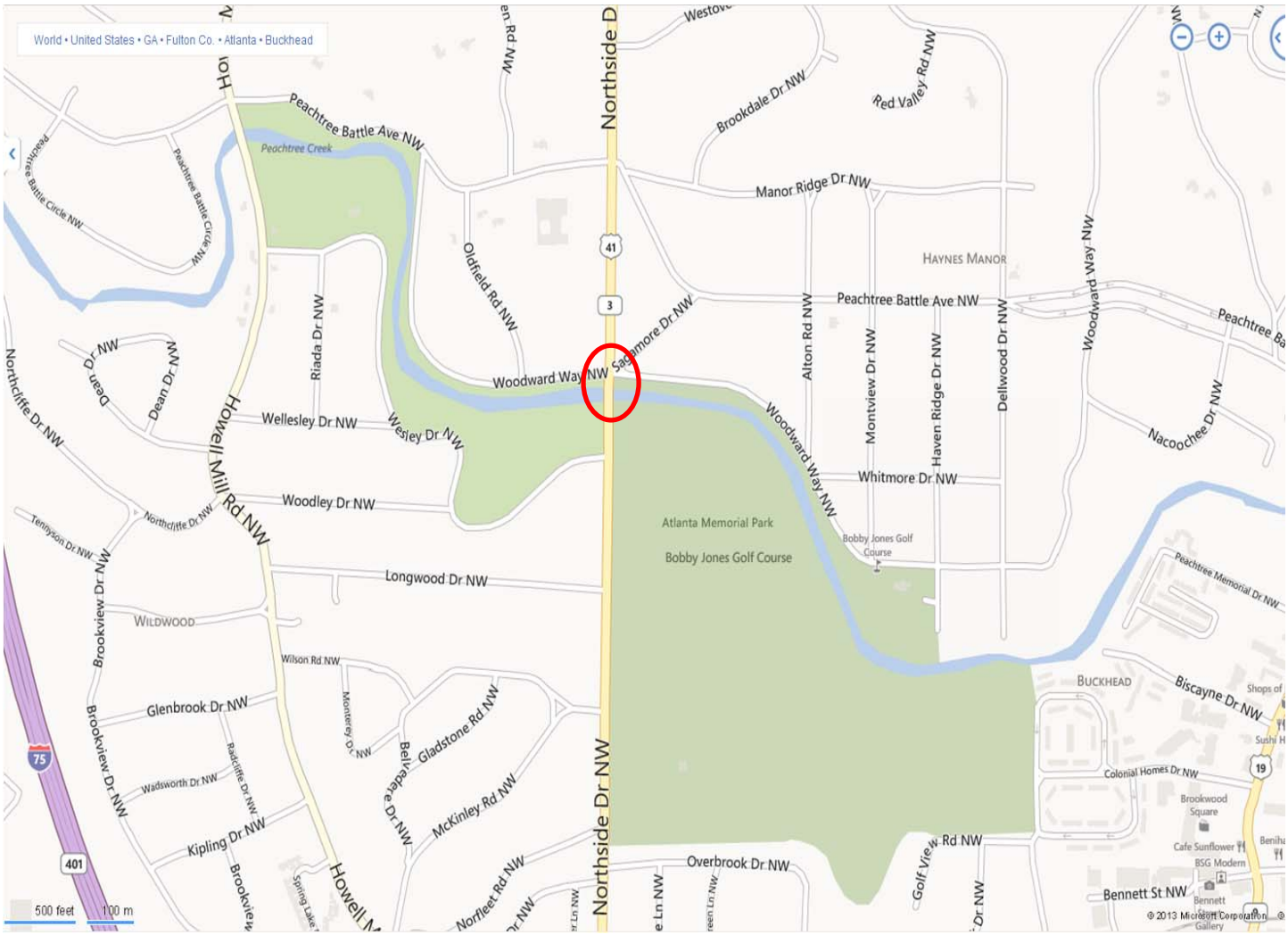

Location Map

Project: CSBRG-0007-00(174), Fulton County **PI No.:** 0007174

Description: SR 3 Bridge Replacement over Peachtree Creek

PLANNING & BACKGROUND DATA

Project Justification Statement: This bridge (Structure ID 121-0013-0; SR 3 over Peachtree Creek) was built in 1926. The bridge consists of three spans of steel girders on vertical concrete walls. The design vehicle used for this bridge is below the current standards. The overall condition of this bridge would be classified as fair to satisfactory. The deck is in fair condition due to concrete cracking and efflorescence which is observed on the bottom of the deck. The deck is currently overlaid with five inches of asphalt. The superstructure is in fair condition with minor section loss on the steel beams. The substructure is in fair condition with minor concrete cracking and minor scour. In addition, this structure has an unknown foundation. Due to the structural integrity of the bridge and the unknown foundation, replacement is recommended by the Bridge Maintenance Office.

Description of the proposed project: CSBRG-0007-00(174), located along US 41/SR 3 over Peachtree Creek in Fulton County, is proposed as a bridge replacement over Peachtree Creek. The existing bridge consists of two 10-foot lanes with a 10-foot left-turn lane, and a 5-foot barrier separated sidewalk on the western side. The existing approach consists of two 10-foot lanes with granite curb and a 10-foot two-way left turn lane (TWLTL). The proposed approach section consists of two 10-foot lanes separated by a 10-foot TWLTL, with a 10-foot shoulder. The proposed bridge section consists of three 10-foot lanes, a 2-foot shoulder, a 4-foot bike lane and a 5½-foot sidewalk on the western side, and a 1-foot shoulder, a 4-foot bike lane, and a 10-foot multi-use path on the eastern side of the bridge. These paths will connect the existing path at Atlanta Memorial Park and the proposed multi-use path along Bobby Jones Golf Course. A temporary bridge will be constructed with a reduced speed limit. The design and posted speed is 35 mph, and the total length of the project will be 0.17 miles.

Federal Oversight: ☐ Full Oversight ☒ Exempt ☐ State Funded ☐ Other

MPO: Atlanta Regional Commission (ARC) MPO Project ID: AT - 228

Regional Commission: Atlanta Regional Commission RC Project ID:

Congressional District(s): 5

Projected Traffic: ADT

Current Year (2013): 15,900 Open Year (2018): 16,800 Design Year (2038): 20,400
Traffic Projections Performed by: GDOT Office of Planning

Functional Classification (Mainline): Urban Minor Arterial Street

Is this a 3R (Resurfacing, Restoration, & Rehabilitation) Project? ☒ No ☐ Yes

Is this project on a designated Bike Route, Pedestrian Plan, or Transit Network?
☐ None ☐ Bike Route ☒ Pedestrian Plan ☒ Transit Network

CONTEXT SENSITIVE SOLUTIONS

Issues of Concern: This project is located in a community with many historic resources and parks. Specifically Atlanta Memorial Park is directly on the west side of the existing bridge and Haynes Manor Park is located east of SR 3 after the intersection with Woodward Way. Historic Bobby Jones Golf Course, an 18-hole public course, is located on the eastern side of SR 3. In addition to the park and golf course attendees, the project should balance concerns of the residences to the north of the bridge and the regular commuters that use this bridge on a daily basis. This bridge will need to accommodate high pedestrian and bike traffic both during and after construction. Peachtree Creek Trail connects Atlanta Memorial Park on the south side of the bridge with a residential area to the north of the bridge. Along this corridor, North Atlanta High School is 0.8 miles north of the existing bridge. This corridor may also be used by emergency vehicles to access Piedmont Hospital, located 1.50 miles southeast of the project, and fire stations, located 1.75 miles northwest and 1.90 miles southwest of the existing bridge.

Context Sensitive Solutions: The design of the bridge and its construction will attempt to limit the impacts to the historic golf course, historic districts, and parks as much as possible while accommodating the heavy commuter traffic as well as the expected bike and pedestrian traffic. Access to the corridor will be maintained throughout construction for schools and emergency vehicles. The temporary bridge is proposed to be constructed to the west of the existing bridge, minimizing the impacts to the golf course. It will be designed with sufficient width to include a barrier separated area for temporary use by bike and pedestrian traffic. Context-sensitive solutions include maintaining the existing roadway lane width, connecting to existing paths, and continuing connectivity with the proposed multi-use path under PI 0004166.

Crash History:

Year	No. Crashes	No. Vehicles	No. Injuries	No. Fatalities
2006	15	29	4	0
2007	8	16	3	0
2008	8	17	4	0
2009	10	21	4	0
All Years Total	41	83	15	0

*Crash data includes the intersection to the north of existing bridge.

DESIGN AND STRUCTURAL DATA

Mainline Design Features: ***US 41/SR 3 Northside Drive***

Feature	Existing	Standard*	Proposed
Typical Section			
- **Number of Lanes**	**2**	**2**	**2**
- **Lane Width(s)**	**10’**	**11’-12’**	**10’**
- **Median Width & Type**	**10’ TWLTL**	**N/A**	**10’ TWLTL**
- **Outside Shoulder or Border Width ****	**10’**	**10’**	**10’**

- Outside Shoulder Slope	N/A	2%	2%
- Inside Shoulder Width	N/A	N/A	N/A
- Sidewalks	None	5'	** None
- Auxiliary Lanes	N/A	N/A	N/A
- Bike Lanes	None	4'	None
Posted Speed	35		35
Design Speed	35	35	35
Min Horizontal Curve Radius	N/A	371	371
Max Superelevation Rate	N/A	4%	4%
Max Allowable Grade	6%	6%	6%
Access Control	By Permit	By Permit	By Permit
Right-of-Way Width	50 ft	N/A	80 ft
Maximum Grade – Crossroad	N/A	9%	9%
Design Vehicle	Unknown	WB-40	WB-40

*According to current GDOT design policy if applicable

**The roadway currently does not have a standard urban shoulder. This project will replace the existing granite curb to match the existing conditions and to limit impacts to environmental resources. Pedestrian access will be provided on both sides of SR 3 by connecting to the existing path on Atlanta Memorial Park to the west and the proposed multi-use path to the east.

Bridge Section Design Features: ***US 41/SR 3 Northside Drive bridge over Peachtree Creek***

Feature	Existing	Standard*	Proposed
Typical Section			
- Number of Lanes	3	3	3
- Lane Width(s)	10'	11'-12'	10'
- Median Width & Type	N/A	N/A	N/A
- Outside Shoulder or Border Area Width	N/A	N/A	2' Paved – Border
- Outside Shoulder Slope	N/A	N/A	N/A
- Inside Shoulder Width	N/A	N/A	N/A
- Sidewalks	5'	5'	5.5'
- Auxiliary Lanes	N/A	N/A	N/A
- Bike Lanes	None	4'	4'
Posted Speed	35		35
Design Speed	35	35	35
Min Horizontal Curve Radius	N/A	371	371
Max Superelevation Rate	N/A	4%	4%
Max Allowable Grade	1%	6%	6%
Access Control	By Permit	By Permit	By Permit
Right-of-Way Width	50 ft	N/A	80 ft
Maximum Grade – Crossroad	N/A	N/A	N/A
Design Vehicle	Unknown	WB-40	WB-40

*According to current GDOT design policy if applicable

Major Structures:

Structure	Existing	Proposed
Structure ID: 121-0013-0 - Bridge	The existing bridge is 125-ft long and 32.5-ft wide. The sufficiency rating is 41.38.	The proposed structure is 210-ft long and 59-ft wide. This includes 3 – 10' lanes, 4' bike lanes, a 2' offset and 5.5' sidewalk on the western side, and a 1' offset and 10' multi-use path on the eastern side. The bike lanes will be placed on each side of the bridge for future use.
Retaining wall	1 – Retaining wall connecting to the north side on existing bridge.	Retaining wall will be retained.

Major Interchanges/Intersections: To the north of the existing bridge is a five-legged intersection. Woodward Way runs west-east, intersects with SR 3, and continues east. Sagamore Drive intersects perpendicularly with Woodward Way 80 ft to the east of SR 3. This intersection will be reconstructed because of the grade change.

Highway Safety Calculations: GDOT Office of Roadway Design policy directs that Highway Safety Manual (HSM) analysis is not accomplished for bridge replacement projects with 0.5-mile or less of roadway construction on each bridge approach. This project has less than 0.25-mile of roadway construction proposed. A HSM analysis is not included.

Utility Involvements: Atlanta Gas Light Company, AT&T, Time Warner Telecommunications, Georgia Power, Comcast, Verizon Business, Zayo, and Atlanta Bureau of Watershed Mgmt.

Public Interest Determination Policy and Procedure recommended (Utilities)? ☒ No ☐ Yes

SUE Required: ☐ No ☒ Yes

Complete Streets - Bicycle, Pedestrian, and/or Transit Warrants:

Warrants met: ☐ None ☒ Bicycle ☒ Pedestrian ☒ Transit

Because of the urban setting and its proximity to city parks, this project warrants bicycle, pedestrian, and transit accommodations. Bike lanes will be added to the bridge only for future use.

Right-of-Way:

Required Right-of-Way anticipated: ☐ No ☒ Yes ☐ Undetermined

Easements anticipated: ☐ None ☐ Temporary ☒ Permanent ☒ Utility ☐ Other

Anticipated number of impacted parcels:		24
Displacements anticipated:	Total:	0
	Businesses:	0
	Residences:	0
	Other:	0

Location and Design approval: ☐ Not Required ☒ Required
Off-site Detours Anticipated: ☐ No ☐ Undetermined ☒ Yes
Off-site detours will be required for the side roads as a result of raising the roadway profile.
Transportation Management Plan [TMP] Required: ☐ No ☒ Yes
If Yes: Project classified as: ☒ Non-Significant ☐ Significant
TMP Components Anticipated: ☒ TTC ☐ TO ☐ PI

Design Exceptions to FHWA/AASHTO controlling criteria anticipated:

FHWA/AASHTO Controlling Criteria	No	Undeter-mined	Yes	Appvl Date (if applicable)
1. Design Speed	☒	☐	☐	
2. Lane Width	☒	☐	☐	
3. Shoulder Width	☒	☐	☐	
4. Bridge Width	☒	☐	☐	
5. Horizontal Alignment	☒	☐	☐	
6. Superelevation	☒	☐	☐	
7. Vertical Alignment	☒	☐	☐	
8. Grade	☒	☐	☐	
9. Stopping Sight Distance	☒	☐	☐	
10. Cross Slope	☒	☐	☐	
11. Vertical Clearance	☒	☐	☐	
12. Lateral Offset to Obstruction	☒	☐	☐	
13. Bridge Structural Capacity	☒	☐	☐	

Design Variances to GDOT Standard Criteria anticipated:

GDOT Standard Criteria	Reviewing Office	No	Undeter--mined	Yes	Appvl Date (if applicable)
1. Access Control/Median Opening	DP&S	☒	☐	☐	
2. Intersection Sight Distance	DP&S	☒	☐	☐	
3. Intersection Skew Angle	DP&S	☒	☐	☐	
4. Lateral Offset to Obstruction	DP&S	☒	☐	☐	
5. Rumble Strips	DP&S	☒	☐	☐	
6. Safety Edge	DP&S	☒	☐	☐	
7. Median Usage*	DP&S	☐	☐	☒	
8. Roundabout Illumination Levels	DP&S	☒	☐	☐	
9. Complete Streets	DP&S	☒	☐	☐	
10. ADA & PROWAG	DP&S	☒	☐	☐	
11. GDOT Construction Standards	DP&S	☒	☐	☐	
12. GDOT Drainage Manual	DP&S	☒	☐	☐	
13. GDOT Bridge & Structural Manual	Bridges	☒	☐	☐	

*A design variance will be required for the proposed reduced median width to limit the impacts on right of way and historical resources.

VE Study anticipated: ☒ No ☐ Yes ☐ Completed – Date:

ENVIRONMENTAL DATA

Anticipated Environmental Document:
GEPA: ☐ **NEPA:** ☒ CE ☐ EA/FONSI ☐ EIS

Project Air Quality:
Is the project located in a PM 2.5 Non-attainment area? ☐ No ☒ Yes
Is the project located in an Ozone Non-attainment area? ☐ No ☒ Yes
Is a Carbon Monoxide hotspot analysis required? ☐ No ☒ Yes
Project is exempt because no additional lanes will be added to the bridge.

MS4 Compliance – Is the project located in an MS4 area? ☐ No ☒ Yes

Environmental Permits/Variances/Commitments/Coordination anticipated:

Permit/ Variance/ Commitment/ Coordination Anticipated	No	Yes	Remarks
1. U.S. Coast Guard Permit	☒	☐	
2. Forest Service/Corps Land	☒	☐	
3. CWA Section 404 Permit	☐	☒	
4. Tennessee Valley Authority Permit	☒	☐	
5. Buffer Variance	☐	☒	
6. Coastal Zone Management Coordination	☒	☐	
7. NPDES	☒	☐	
8. FEMA	☒	☐	
9. Cemetery Permit	☒	☐	
10. Other Permits	☒	☐	
11. Other Commitments	☒	☐	
12. Other Coordination	☒	☐	

Is a PAR required? ☒ No ☐ Yes ☐ Completed – Date:

NEPA/GEPA: 4(f) Resources are present in the area of this project, including Atlanta Memorial Park, Bobby Jones Golf Course, Woodfield, Springlake, Collier Heights, and Haynes Manor Historic Districts. This project may impact these areas.

Ecology: Aside from Peachtree Creek, more resources will be identified with additional ecological survey.

History: Historical resources exist in the area of the bridge. The roadway, SR 3, Bobby Jones Golf Course, and Atlanta Memorial Park are historical resources. Historic residential neighborhoods are located to the north and the south of the existing bridge.

Archeology: There are no cemeteries along the project. More information will be gathered with additional ecological survey.

Air & Noise: Because the project is in a residential area, an air & noise study will be conducted.

Public Involvement: A Public Information Open House (PIOH) will be scheduled for spring 2016. A Public Hearing Open House (PHOH) may be required.

Major stakeholders: The major stakeholders for this project are Bobby Jones Golf Course, Atlanta Office of Parks, Atlanta Bureau of Watershed Management, PATH Foundation, Atlanta Memorial Park Conservancy, the traveling public, and adjacent property owners.

CONSTRUCTION

Issues potentially affecting constructability/construction schedule: There are several major utilities located both on the existing bridge and within the footprint of construction. Utility relocation must be addressed prior to construction. In addition, because of the offset of the proposed temporary bridge from the current intersection, a temporary signal will be required to maintain traffic thru the intersection north of the bridge during construction.

Early Completion Incentives recommended for consideration: ☒ No ☐ Yes

PROJECT RESPONSIBILITIES

Project Activities:

Project Activity	Party Responsible for Performing Task(s)
Concept Development	GDOT Office of Roadway Design
Design	GDOT Office of Roadway Design
Right-of-Way Acquisition	GDOT / District 7 RW Team
Utility Relocation	Individual Utility Companies
Letting to Contract	GDOT / Construction Bidding
Construction Supervision	GDOT / District 7 Construction
Providing Material Pits	Contractor
Providing Detours	N/A
Environmental Studies, Documents, and Permits	GDOT / Environmental Services
Environmental Mitigation	GDOT / Environmental Services
Construction Inspection & Materials Testing	GDOT / District 7 Construction

Lighting required: ☐ No ☒ Yes

- The corridor has existing street lighting.

Concept Meeting: The concept meeting was held on May 2, 2013. See attachments for minutes.

Other coordination to date:

- Initial Roadway Design/Bridge Design Meeting – February 13, 2013 (See attachments for minutes)
- A discussion was held with Pete Pellegrini from the PATH Foundation in regards to the multi-use path that will be constructed under PI 0004166. They are currently modeling a proposed pedestrian bridge over Peachtree Creek as a continuation of the multi-use path and would like to incorporate the design with this project. Continued coordination will occur with the PATH Foundation during preliminary design.

Other projects in the area:

STP00-0004-00(166) PI0004166 Let Date: 2/21/2014

This project proposes roadway and waterline improvements along SR 3/Northside Drive from I-75 to the Northside Parkway intersection. The existing reversible lane will be converted to a TWLTL. Signal equipment and pedestrian accommodations will be upgraded at several intersections.

Project Cost Estimate and Funding Responsibilities:

	Breakdown of PE	ROW	Reimbursable Utility	CST*	Environmental Mitigation	Total Cost
By Whom	GDOT	GDOT	GDOT	GDOT	GDOT	
$ Amount	$ 795,738.92	$ 1,954,000.00	$ 153,000.00	$ 3,571,856.55	$ 0.00	$ 6,474,595.47
Date of Estimate	7/25/2006	12/16/2014	11/12/2014	2/19/2015		

*CST Cost includes: Construction, Engineering and Inspection, Contingencies, and Liquid AC Cost Adjustment.

ALTERNATIVES DISCUSSION

Alternative selection:

Preferred Alternative: Temporary bridge to the west of the existing bridge.			
Estimated Property Impacts:	**24**	**Estimated CST Cost:**	**$ 3,571,856.55**
Estimated ROW Cost:	**$1,954,000.00**	**Estimated CST Time:**	**24 months**

Rationale: This alternative would build a temporary bridge 50 feet to the left of the existing bridge centerline, toward Memorial Park. The clearance between the existing bridge and the detour bridge would be 10 feet. In an attempt to minimize the amount of right of way necessary, and because the posted speed limit will be reduced to 25 mph during construction, the shifting taper onto the temporary bridge will be reduced from the MUTCD recommended amount, as is shown on the concept layout. Sagamore Drive and Woodward Way will have to be detoured because the proposed roadway profile will be raised. Residents will use Peachtree Battle Ave, adding up to 1.95 miles of travel to obtain access to Sagamore Drive and Woodward Way. It is anticipated that this alternative would cause the least amount of impact to the surrounding property owners and traveling public and is therefore recommended for implementation.

Alternative 1: Close roadway and detour traffic offsite.			
Estimated Property Impacts:	**24**	**Estimated CST Cost:**	**$ 2,164,530.55**
Estimated ROW Cost:	**$ 1,835,967.50**	**Estimated CST Time:**	**18 months**

Rationale: This alternative would close the bridge to traffic and provide an off-site detour during construction. The proposed detour would reroute traffic from SR 3 along Collier Rd NW to Peachtree Rd NE, continue to Peachtree Battle Ave NW, and use Peachtree Battle Ave to reach SR 3. The proposed detour route would be 3.05 miles in length. While this alternative would require the least amount of construction time and costs, the impacts to the residential areas and the traveling public are expected to be extremely high. Those affected by this detour include several neighborhood associations in the area, Piedmont Hospital, which is located on corner of Collier Rd and Peachtree Rd, and E Rivers Elementary School, which is located on corner of Peachtree Battle Ave and Peachtree Rd. Because of the larger number of anticipated impacts, this alternative is not recommended for implementation.

Alternative 2: Temporary bridge to the East of existing bridge			
Estimated Property Impacts:	**24**	**Estimated CST Cost:**	**$ 3,280,044.61**
Estimated ROW Cost:	**$ 2,065,277.00**	**Estimated CST Time:**	**30 months**

Rationale: This alternative would build a temporary bridge to the east of the existing bridge, toward the golf course. A large box culvert is located to the east of the existing bridge and would interfere with the placement of a detour bridge in this location. In addition, this alternative is anticipated to cause major impacts to the adjacent golf course which would result in higher right of way costs. The utility relocation for this alternative would also increase costs and construction time. As a result, this alternative is not recommended for implementation.

Alternative 3: Extend bridge over Woodward Way			
Estimated Property Impacts:	**9**	**Estimated CST Cost:**	**$ 3,758,640.14**
Estimated ROW Cost:	**$ 2,009,000.00**	**Estimated CST Time:**	**30 months**

Rationale: This alternative would raise the grade of existing SR 3 and extend the bridge to span Peachtree Creek and Woodward Way. The width of Woodward Way would be reduced and Sagamore Drive would be re-aligned to intersect with Woodward Way. Retaining walls would be constructed on both sides of the roadway to reduce the impacts on the area. A temporary bridge, constructed to the west of the existing bridge, would be implemented during construction. The impacts to pedestrians and the residential area are expected to be extremely high. Because of the impact to the area and the high construction costs, this alternative is not recommended for implementation.

Comments: The alternative studied considered the preliminary results of the hydraulic study.

Attachments:

1. Concept Layout
2. Typical sections
3. Detailed Cost Estimates:
    a. Construction including Engineering and Inspection and Contingencies
    b. Completed Fuel & Asphalt Price Adjustment forms
    c. Right-of-Way
    d. Utility Cost Estimate
4. Crash Report Summary
5. Traffic Projections
6. Bridge Inventory Data
7. Minutes of Concept Team Meeting
8. Minutes of Roadway Design/Bridge Design Initial Meeting

APPROVALS

Concur: Glen Bowman
Director of Engineering

Approve: Margaret B. Pickel 3.16.15
Chief Engineer Date

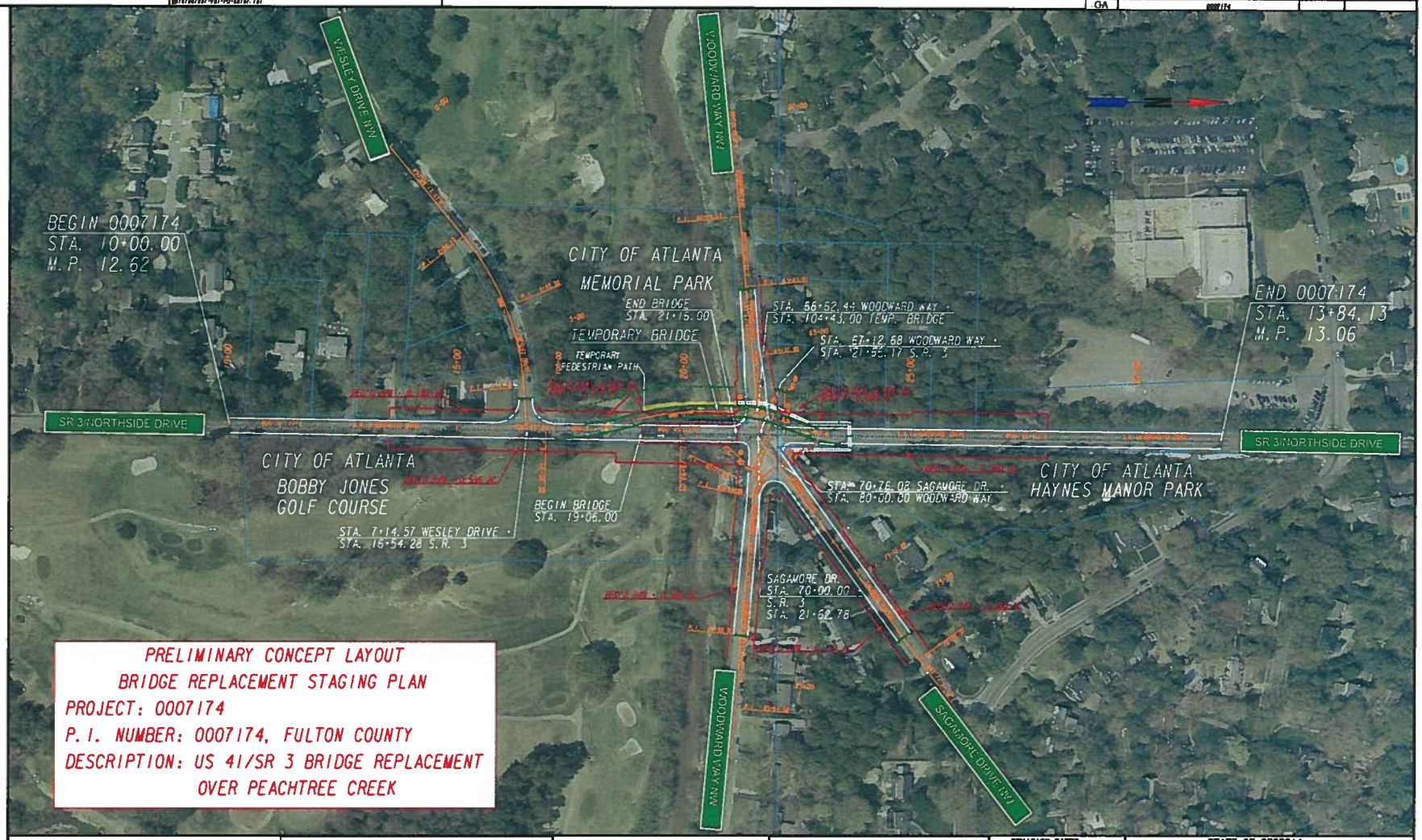

PRELIMINARY CONCEPT LAYOUT
BRIDGE REPLACEMENT STAGING PLAN
PROJECT: 0007174
P.I. NUMBER: 0007174, FULTON COUNTY
DESCRIPTION: US 41/SR 3 BRIDGE REPLACEMENT
OVER PEACHTREE CREEK

PROPERTY AND EXISTING R/W LINE	
REQUIRED R/W LINE	
EASEMENT FOR CONSTR OF SLOPES	
STAGED TRAFFIC FLOW	
TEMPORARY POLE FOR SIGNAL	

GEORGIA
DEPARTMENT
OF
TRANSPORTATION

SCALE IN FEET
0 100 200 400

REVISION DATES

STATE OF GEORGIA
DEPARTMENT OF TRANSPORTATION
OFFICE: ROADWAY DESIGN
CONCEPT LAYOUT

PRELIMINARY LAYOUT
FULTON COUNTY

DRAWING No.

TYPICAL SECTION
U.S. 41 / S.R. 3

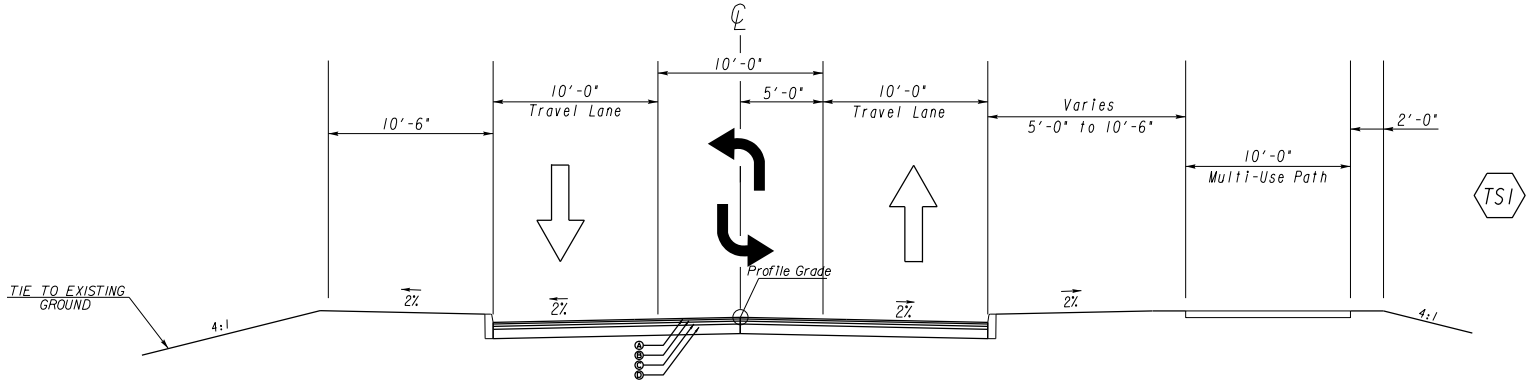

SECTION APPLIES TO AREA SOUTH OF BRIDGE

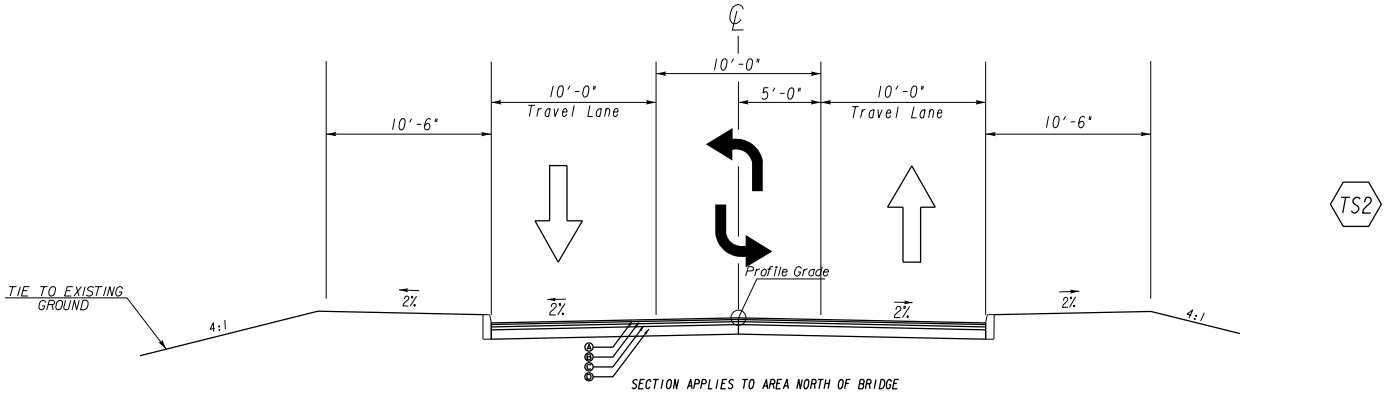

SECTION APPLIES TO AREA NORTH OF BRIDGE

GEORGIA
DEPARTMENT OF TRANSPORTATION

REVISION DATES

STATE OF GEORGIA
DEPARTMENT OF TRANSPORTATION
OFFICE: ROADWAY DESIGN

TYPICAL SECTIONS

CSBRG-0007-00(174)
FULTON COUNTY

DRAWING No. 05-001

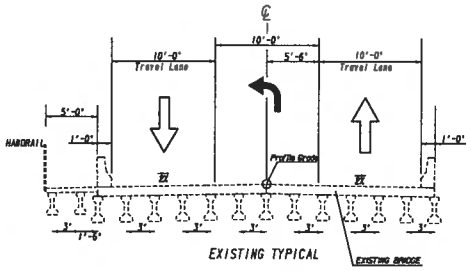

EXISTING TYPICAL

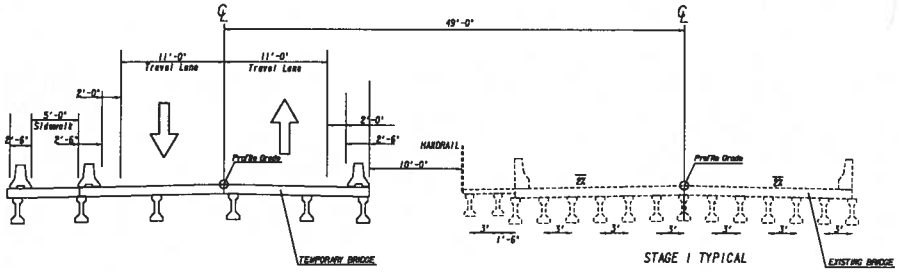

STAGE 1 TYPICAL

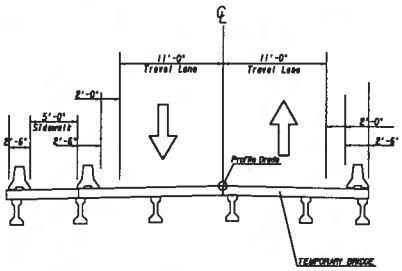

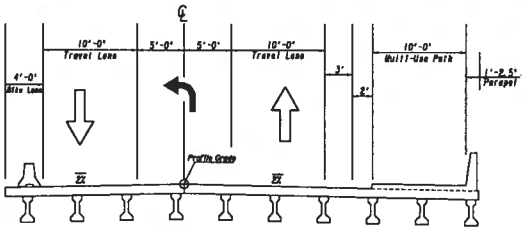

STAGE 2 TYPICAL

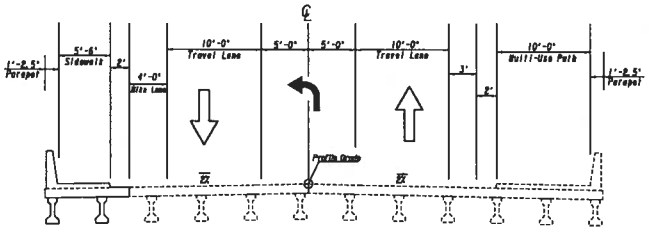

STAGE 3 TYPICAL

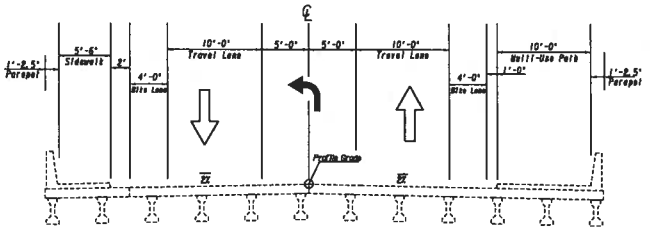

FINAL BRIDGE TYPICAL

STATE OF GEORGIA
DEPARTMENT OF TRANSPORTATION
OFFICE: ROADWAY DESIGN

TYPICAL SECTIONS

CSBRG-0007-001(74)
FULTON COUNTY

DRAWING No. 05-002

REVISION DATES

GEORGIA
DEPARTMENT OF TRANSPORTATION

STATE GA

PROJECT NUMBER 0007174

SHEET NO.

TOTAL SHEETS

0007174_05.dgn

2:42:32 PM

GPK07-48

(pwilmerson-PW3-PO.1b)

10/08/2014

WSDot/Wetlands

CONTINGENCY SUMMARY

A.	CONSTRUCTION COST ESTIMATE:	$ 2,990,173.49	Base Estimate From CES		
B.	ENGINEERING AND INSPECTION (E & I):	$ 149,508.67	Base Estimate (A) x	5	%
C.	CONTINGENCY:	$ 376,761.86	Base Estimate (A) + E & I (B) x See % Table in "Risk Based Cost Estimation" Memo	12	%
D.	TOTAL LIQUID AC ADJUSTMENT:	$ 55,412.53	Total From Liquid AC Spreadsheet		
E.	CONSTRUCTION TOTAL:	$ **3,571,856.55**	(A + B + C + D = E)		

REIMBURSABLE UTILTY COSTS

UTILITY OWNER	REIMBURSABLE COST
Georgia Power Distribution	$ 153,000.00
TOTAL	**$ 153,000.00**

ATTACHMENTS:

Detailed Cost Estimate Printout From TRAQS
Liquid AC Adjustment Spreadsheet

DETAILED COST ESTIMATE

Georgia Department of Transportation

Job: 0007174

JOB NUMBER *0007174* **FED/STATE PROJECT NUMBER**

SPEC YEAR: *01*

DESCRIPTION: *SR 3 AT PEACHTREE CREEK*

ITEMS FOR JOB 0007174

010 - ROADWAY ITEMS

Line Number	ITEM	QUANTITY	UNITS	PRICE	DESCRIPTION	AMOUNT
0005	150-1000	1.000	LS	$70,000.00000	TRAFFIC CONTROL - 0007174	$70,000.00
0240	150-5010	2.000	EA	$11,260.34600	TRAF CTRL,PORTABLE IMPACT ATTN	$22,520.69
0220	205-0001	3905.000	CY	$12.39038	UNCLASS EXCAV	$48,384.43
0225	206-0002	33774.000	CY	$6.75266	BORROW EXCAV, INCL MATL	$228,064.34
0185	310-5100	11794.000	SY	$20.17293	GR AGGR BS CRS 10IN INCL MATL	$237,919.54
0050	402-3121	1946.000	TN	$64.31284	RECYL AC 25MM SP,GP1/2,BM&HL	$125,152.79
0055	402-3130	973.000	TN	$71.42553	RECYL AC 12.5MM SP,GP2,BM&HL	$69,497.04
0060	402-3190	1297.000	TN	$65.97521	RECYL AC 19 MM SP,GP 1 OR 2 ,INC BM&HL	$85,569.85
0065	413-1000	1003.000	GL	$2.39436	BITUM TACK COAT	$2,401.54
0070	433-1000	208.000	SY	$144.95589	REINF CONC APPROACH SLAB	$30,150.83
0195	437-1571	5390.000	LF	$29.43746	ST GRANITE CURB,5" X 17",TP A	$158,667.91
0190	441-0108	185.000	SY	$54.46681	CONC SIDEWALK, 8 IN	$10,076.36
0085	620-0200	910.000	LF	$56.65621	TEMP BARRIER, METHOD NO. 2	$51,557.15
0090	632-0003	5.000	EA	$13,133.94872	CHANGEABLE MESS SIGN,PORT,TP 3	$65,669.74
0230	634-1200	17.000	EA	$105.60853	RIGHT OF WAY MARKERS	$1,795.35
0098	641-1100	84.000	LF	$56.17742	GUARDRAIL, TP T	$4,718.90
0099	641-1200	200.000	LF	$20.46442	GUARDRAIL, TP W	$4,092.88
0245	641-5001	1.000	EA	$656.28566	GUARDRAIL ANCHORAGE, TP 1	$656.29
0095	641-5012	2.000	EA	$1,797.39437	GUARDRAIL ANCHORAGE, TP 12	$3,594.79
0100	647-0220	1.000	LS	$60,000.00000	TRAF SIGNAL INSTALLATION, TEMP	$60,000.00
					SUBTOTAL FOR ROADWAY ITEMS:	**$1,280,490.42**

020 - EROSION CONTROL ITEMS

Line Number	ITEM	QUANTITY	UNITS	PRICE	DESCRIPTION	AMOUNT
0015	163-0300	2.000	EA	$1,594.49224	CONSTRUCTION EXIT	$3,188.98
0019	163-0528	450.000	LF	$3.72189	CONSTR AND REM FAB CK DAM -TP C SLT FN	$1,674.85
0020	165-0030	500.000	LF	$1.04112	MAINT OF TEMP SILT FENCE, TP C	$520.56
0024	165-0041	225.000	LF	$1.43956	MAINT OF CHECK DAMS - ALL TYPES	$323.90
0025	165-0101	4.000	EA	$436.86515	MAINT OF CONST EXIT	$1,747.46
0030	170-1000	250.000	LF	$12.44318	FLOAT SILT RETENTION BARRIER	$3,110.80
0035	171-0030	1000.000	LF	$3.32596	TEMPORARY SILT FENCE, TYPE C	$3,325.96
0125	643-8200	200.000	LF	$2.44876	BARRIER FENCE (ORANGE), 4 FT	$489.75
0140	716-2000	250.000	SY	$1.09915	EROSION CONTROL MATS, SLOPES	$274.79
					SUBTOTAL FOR EROSION CONTROL ITEMS:	**$14,657.05**

CONFIDENTIALITY NOTICE: This document may contain confidential and/or privileged information. Any unauthorized duplication, disclosure, distribution/ retransmission or taking of any action in reliance upon the material in this document is strictly forbidden.

DETAILED COST ESTIMATE

Georgia Department of Transportation

Job: 0007174

030 - SIGNING AND MARKING ITEMS

Line Number	ITEM	QUANTITY	UNITS	PRICE	DESCRIPTION	AMOUNT
0250	647-1000	1.000	LS	$85,000.00000	TRAF SIGNAL INSTALLATION NO - 0007174	$85,000.00
0145	653-0120	8.000	EA	$68.37167	THERM PVMT MARK, ARROW, TP 2	$546.97
0105	653-1704	100.000	LF	$3.49759	THERM SOLID TRAF STRIPE,24",WH	$349.76
0150	653-1804	180.000	LF	$2.03674	THERM SOLID TRAF STRIPE, 8",WH	$366.61
0110	653-2501	1.000	LM	$1,344.96493	THERMO SOLID TRAF ST, 5 IN, WH	$1,344.96
0115	653-2502	1.000	LM	$1,332.98790	THERMO SOLID TRAF ST, 5 IN YE	$1,332.99
0120	653-3502	2000.000	GLF	$0.30199	THERMO SKIP TRAF ST, 5 IN, YEL	$603.98
0255	657-1085	270.000	LF	$6.72045	PRF PL SD PVT MKG,8",B/W,TP PB	$1,814.52
0260	657-6085	270.000	LF	$7.37361	PRF PL SD PVMT MKG,8",B/Y,TPPB	$1,990.87
					SUBTOTAL FOR SIGNING AND MARKING ITEMS:	**$93,350.66**

040 - BRIDGE ITEMS

Line Number	ITEM	QUANTITY	UNITS	PRICE	DESCRIPTION	AMOUNT
0075	540-1102	1.000	LS	$125,000.00000	REM OF EX BR, BR NO - BRIDGE 1	$125,000.00
0155	541-0001	1.000	LS	$299,700.00000	DETOUR BRIDGE - BRIDGE 2	$299,700.00
0080	543-9000	1.000	LS	$1,067,850.00000	CONSTR OF BRIDGE COMPLETE - BRIDGE 1	$1,067,850.00
					SUBTOTAL FOR BRIDGE ITEMS:	**$1,492,550.00**

050 - DRAINAGE ITEMS

Line Number	ITEM	QUANTITY	UNITS	PRICE	DESCRIPTION	AMOUNT
0160	441-0303	4.000	EA	$1,788.15203	CONC SPILLWAY, TP 3	$7,152.61
0130	550-1180	500.000	LF	$34.81089	STM DR PIPE 18",H 1-10	$17,405.45
0175	576-1015	50.000	LF	$29.52905	SLOPE DRAIN PIPE, 15 IN	$1,476.45
0170	603-2180	150.000	SY	$32.99541	STN DUMPED RIP RAP, TP 3, 12"	$4,949.31
0235	603-7000	150.000	SY	$4.17773	PLASTIC FILTER FABRIC	$626.66
0135	668-1100	10.000	EA	$2,275.43775	CATCH BASIN, GP 1	$22,754.38
					SUBTOTAL FOR DRAINAGE ITEMS:	**$54,364.86**

060 - TEMPORARY PAVING

Line Number	ITEM	QUANTITY	UNITS	PRICE	DESCRIPTION	AMOUNT
0200	310-5080	1774.000	SY	$15.76742	GR AGGR BS CRS 8IN INCL MATL	$27,971.40
0205	402-3130	146.000	TN	$80.72034	RECYL AC 12.5MM SP,GP2,BM&HL	$11,785.17
0210	402-3190	195.000	TN	$75.55963	RECYL AC 19 MM SP,GP 1 OR 2 ,INC BM&HL	$14,734.13
0215	413-1000	89.000	GL	$3.03147	BITUM TACK COAT	$269.80
					SUBTOTAL FOR TEMPORARY PAVING:	**$54,760.50**

TOTALS FOR JOB 0007174

ITEMS COST:	**$2,990,173.49**
COST GROUP COST:	**$0.00**
ESTIMATED COST:	**$2,990,173.49**
CONTINGENCY PERCENT:	**0.00**
ENGINEERING AND INSPECTION:	**0.00**
ESTIMATED COST WITH CONTINGENCY AND E&I:	**$2,990,173.49**

CONFIDENTIALITY NOTICE: This document may contain confidential and/or privileged information. Any unauthorized duplication, disclosure, distribution/ retransmission or taking of any action in reliance upon the material in this document is strictly forbidden.

PROJ. NO.	CSBRG-000700(174) - Bridge Replacement	CALL NO.
P.I. NO.	0007174	
DATE	2/19/2015	

INDEX (TYPE)	**DATE**	**INDEX**
REG. UNLEADED	Feb-15	$ 1.998
DIESEL		$ 2.777
LIQUID AC		$ 534.00

Link to Fuel and AC Index:
http://www.dot.ga.gov/doingbusiness/Materials/Pages/asphaltcementindex.aspx

LIQUID AC ADJUSTMENTS

PA=[((APM-APL)/APL)]xTMTxAPL

Asphalt

Price Adjustment (PA)				**54032.256**	**$**	**54,032.26**
Monthly Asphalt Cement Price month placed (APM)	Max. Cap	60%	$	854.40		
Monthly Asphalt Cement Price month project let (APL)			$	534.00		
Total Monthly Tonnage of asphalt cement (TMT)				168.64		

ASPHALT	**Tons**	**%AC**	**AC ton**
Leveling		4.0%	0
12.5 mm SMA		4.0%	0
12.5 mm PEM		4.0%	0
12.5 mm SP	973	4.0%	38.92
25 mm SP	1946	4.0%	77.84
19 mm SP	1297	4.0%	51.88
	4216		**168.64**

BITUMINOUS TACK COAT

Price Adjustment (PA)			**$**	**1,380.28**	**$**	**1,380.28**
Monthly Asphalt Cement Price month placed (APM)	Max. Cap	60%	$	854.40		
Monthly Asphalt Cement Price month project let (APL)			$	534.00		
Total Monthly Tonnage of asphalt cement (TMT)				4.307986225		

Bitum Tack Gals	gals/ton	tons
1003	232.8234	4.30798622

PROJ. NO.	CSBRG-000700(174) - Bridge Replacement	CALL NO.	
P.I. NO.	0007174		
DATE	2/19/2015		

BITUMINOUS TACK COAT (surface treatment)

Price Adjustment (PA)				**0**	**$ -**
Monthly Asphalt Cement Price month placed (APM)	Max. Cap	60%	$	854.40	
Monthly Asphalt Cement Price month project let (APL)			$	534.00	
Total Monthly Tonnage of asphalt cement (TMT)				0	

Bitum Tack	SY	Gals/SY	Gals	gals/ton	tons
Single Surf. Trmt.		0.20	0	232.8234	0
Double Surf.Trmt.		0.44	0	232.8234	0
Triple Surf. Trmt		0.71	0	232.8234	0
					0

TOTAL LIQUID AC ADJUSTMENT	**$**	**55,412.53**

GEORGIA DEPARTMENT OF TRANSPORTATION
PRELIMINARY ROW COST ESTIMATE SUMMARY

Date: 12/16/2014 Project: 0007174 Preferred
Revised: County: Fulton County
PI: 0007174
Description: US 41/SR 3 Bridge Replacement Over Peachtree Creek
Project Termini: US 41/SR 3 Bridge Replacement Over Peachtree Creek
Existing ROW: Varies
Parcels: 24 Required ROW: Varies

Land and Improvements	$1,409,561.25
Proximity Damage	*$60,000.00*
Consequential Damage	*$40,000.00*
Cost to Cures	*$115,000.00*
Trade Fixtures	*$0.00*
Improvements	*$250,000.00*
Valuation Services	$126,250.00
Legal Services	$166,200.00
Relocation	$48,000.00
Demolition	$0.00
Administrative	$203,000.00
TOTAL ESTIMATED COSTS	$1,953,011.25
TOTAL ESTIMATED COSTS (ROUNDED)	***$1,954,000.00***

Preparation Credits	Hours	Signature

Prepared By: Dashone Alexander CG#: 286999 12/16/2014 (DATE)
Approved By: Dashone Alexander CG#: 286999 12/16/2014 (DATE)

NOTE: No Market Appreciation is included in this Preliminary Cost Estimate

DEPARTMENT OF TRANSPORTATION
STATE OF GEORGIA

INTERDEPARTMENT CORRESPONDENCE

FILE SR 3 @ Peachtree Creek
P.I. No. 0007174 – Fulton County

OFFICE District 7
Chamblee

DATE November 12, 2014

FROM Patrick Allen, P.E.
District Utilities Engineer

TO Courtney Lovelace, Roadway Design

SUBJECT PRELIMINARY UTILITY COST (ESTIMATE)

As requested by your office, we are furnishing you with a Preliminary Utility Cost estimate for each utility with facilities potentially located within the project limits.

FACILITY OWNER	NON-REIMBURSABLE	REIMBURSABLE	GRAND TOTAL
Atlanta Gas Light Company	$ 157,590.00	$ 0.00	
AT&T Formerly BellSouth	$ 328,838.00	$ 0.00	
Time Warner Telecom	$ 78,795.00	$ 0.00	
Georgia Power Distribution	$ 131,325.00	$ 153,000.00	
Georgia Power Transmission	$ 0.00	$ 0.00	
Comcast	$ 68,289.00	$ 0.00	
Verizon Business	$ 81,947.00	$ 0.00	
Zayo	$ 57,783.00	$ 0.00	
Atlanta Bureau of Watershed Mgmt.	$ 499,035.00	$ 0.00	
Totals	**$ 1,403,602.00**	**$ 153,000.00**	**$1,556,602.00**

If you have any questions, please contact Clyde Cunningham at (770)986-1117.

RSB/PA/CAC

C: Mike Bolden., State Utilities Engineer
Angela Robinson, Office of Financial Management
Sebastian Nesbitt, Area Engineer

ACCIDENT RATE CALCULATION for year(s) 2006,2007,2008,2009

Year	County	Rt Type	Route Num	Low Milelog	High Milelog	ADT	Distance	Vehicle Miles
2006	Fulton	1	000300	12.77	12.88	13,010	0.11	1,431

Total Vehicle Miles: 1,431	Total Accidents: 15	Accident Rate: 2,872
Average ADT: 13,010	Total Injuries: 4	Injury Rate: 766
Length in Miles: 0.11	Total Fatalities: 0	Fatality Rate: 0.00

NOTE: Rates are per 100 Million Vehicle Miles

Year	County	Rt Type	Route Num	Low Milelog	High Milelog	ADT	Distance	Vehicle Miles
2007	Fulton	1	000300	12.77	12.88	9,540	0.11	1,049

Total Vehicle Miles: 1,049	Total Accidents: 8	Accident Rate: 2,089
Average ADT: 9,540	Total Injuries: 3	Injury Rate: 783
Length in Miles: 0.11	Total Fatalities: 0	Fatality Rate: 0.00

NOTE: Rates are per 100 Million Vehicle Miles

Year	County	Rt Type	Route Num	Low Milelog	High Milelog	ADT	Distance	Vehicle Miles
2008	Fulton	1	000300	12.77	12.88	9,540	0.11	1,049

Total Vehicle Miles: 1,049	Total Accidents: 8	Accident Rate: 2,089
Average ADT: 9,540	Total Injuries: 4	Injury Rate: 1,044
Length in Miles: 0.11	Total Fatalities: 0	Fatality Rate: 0.00

NOTE: Rates are per 100 Million Vehicle Miles

Year	County	Rt Type	Route Num	Low Milelog	High Milelog	ADT	Distance	Vehicle Miles
2009	Fulton	1	000300	12.77	12.88	9,254	0.11	1,018

Total Vehicle Miles: 1,018	Total Accidents: 10	Accident Rate: 2,691
Average ADT: 9,254	Total Injuries: 4	Injury Rate: 1,077
Length in Miles: 0.11	Total Fatalities: 0	Fatality Rate: 0.00

NOTE: Rates are per 100 Million Vehicle Miles

SHEET 1 OF 3

FULTON COUNTY
BUILD
24 HR T = 2.50%
S.U. = 2.50%
COMB. = 0.00%

GEORGIA DEPARTMENT OF TRANSPORTATION
OFFICE OF PLANNING

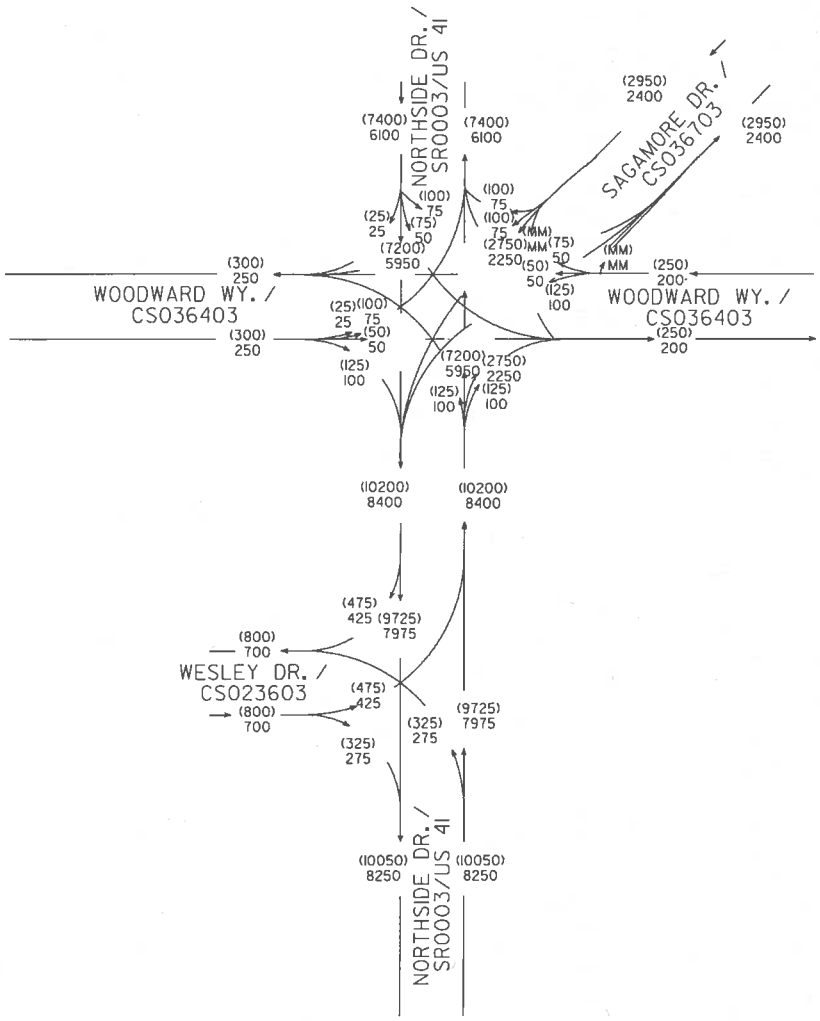

N

CSBRG-0007-00(174)
P.I.# 0007174
FULTON COUNTY
SR 3@
PEACHTREE CREEK

2038 ADT = (000)
2018 ADT = 000

AMW
05/13

SHEET 2 OF 3

FULTON COUNTY
BUILD

T = 1.50%
S.U. = 1.50%
COMB. = 0.00%

GEORGIA DEPARTMENT OF TRANSPORTATION
OFFICE OF PLANNING

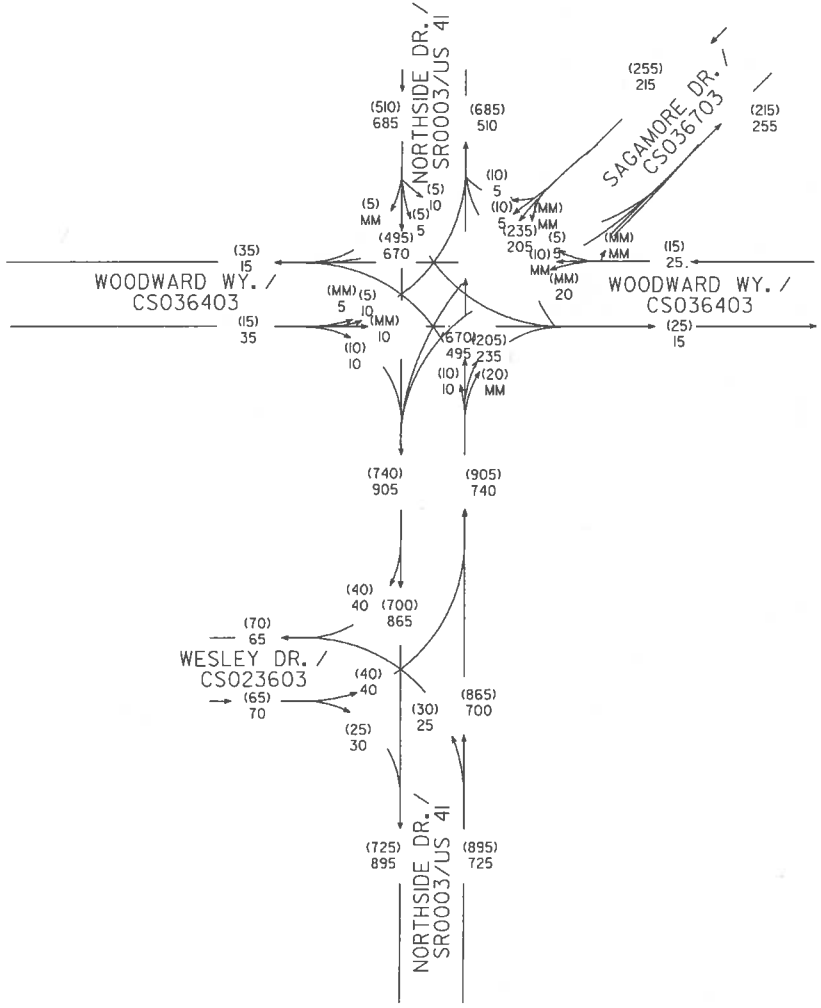

N

CSBRG-0007-00(174)
P.I.# 0007174
FULTON COUNTY
SR 3@
PEACHTREE CREEK

2018 PM DHV = (000)
2018 AM DHV = 000

AMW
05/13

SHEET 3 OF 3

FULTON COUNTY
BUILD

T = 1.50%
S.U. = 1.50%
COMB. = 0.00%

GEORGIA DEPARTMENT OF TRANSPORTATION
OFFICE OF PLANNING

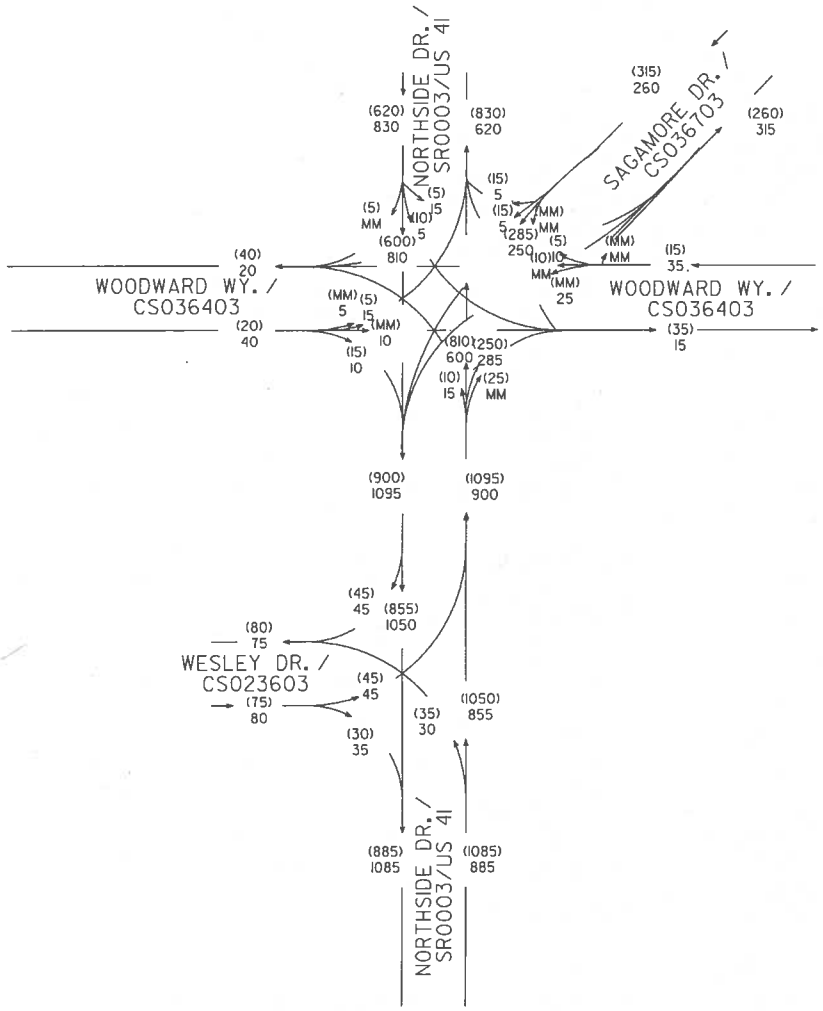

N

CSBRG-0007-00(174)
P.I.# 0007174
FULTON COUNTY
SR 3@
PEACHTREE CREEK

2038 PM DHV = (000)
2038 AM DHV = 000

AWW
05/13

BRIDGE INVENTORY DATA LISTING GEORGIA DEPARTMENT OF TRANSPORTATION

Structure ID: 121-0013-0 **Fulton Area 7** SUFF. RATING 41.38

Location & Geography

*	Structure I.D.No:	121-0013-0	
200	Bridge Information	07	
* 6A	Feature Int:	PEACHTREE CREEK	
* 6B	Critical Bridge:	0	
* 7A	Route Number Carried:	SR00003	
* 7B	Facility Carried:	NORTHSIDE DRIVE	
* 9	Location:	IN NORTH ATLANTA	
2	DOT District:	7	
207	Year Photo:	2011	
* 91	Inspection Frequency:	24	Date: 05/17/2011
92A	Fract Crit Insp Freq:	00	Date: 02/01/1901
92B	Underwater Insp Freq:	00	Date: 02/01/1901
92C	Other Spc. Insp Freq:	00	Date: 02/01/1901
* 4	Place Code:	04000	
* 5	Inventory Route (O/U):	1	
	Type:	2	
	Designation:	1	
	Number:	00041	
	Direction:	0	
* 16	Latitude: 33-49.2205	MMS Prefix: SR	
* 17	Longitude: 84-24.4562	MMS Suffix: 03	MP: 12.85
98	Border Bridge: 000	%Shared: 00	
99	ID Number:	000000000000000	
* 100	STRAHNET:	0	
12	Base Highway Network:	1	
13A	LRS Inventory Route:	1211000300	
13B	Sub Inventory Route:	0	
* 101	Parallel Structure:	N	
* 102	Direction of Traffic:	2	
* 264	Road Inventory Mile Post:	012.95	
* 208	Inspection Area:	07	Initials: JPD
	Engineer's Initial:	sgm	

* Location I.D. No.: 121-00003D-012.85N

* 104	Highway System:	0	
* 26	Functional Classification:	16	
* 204	Federal Route Type:	F	No.: 00015
105	Federal Lands Highway:	0	
* 110	Truck Route:	0	
206	School Bus Route:	1	
217	Benchmark Elevation:	0000.00	
218	Datum:	0	
* 19	Bypass Length:	03	
* 20	Toll:	3	
* 21	Maintenance:	01	
* 22	Owner:	01	
* 31	Design Load:	2	
37	Historical Significance:	5	
205	Congressional District:	05	
27	Year Constructed:	1926	
106	Year Reconstructed:	0000	
33	Bridge Median:	0	
34	Skew:	00	
35	Structure Flared:	0	
38	Navigation Control:	0	
213	Special Steel Design:	0	
267	Type of Paint:	1	
* 42	Type of Service on:	5	
		5	
214	Movable Bridge:	0	
203	Type Bridge:	A-O-M-O	
259	Pile Encasement:	3	
* 43	Structure Type Main:	3	02
45	No. Spans Main:	003	
44	Structure Type Appr:	0	00
46	No. Spans Appr:	0000	
226	Bridge Curve Horz:	0	Vert: 0
111	Pier Protection:	0	
107	Deck Structure Type:	1	
108	Wearing Surface Type:	6	
	Me	1	
	F	0	

Signs & Attachments

225	Expansion Joint Type:	02	
242	Deck Drains:	1	
243	Parapet Location:	0	
	Height:		0.00
	Width:		0.00
238	Curb:		0.20 1
239	Handrail:	1	1
* 240	Median Barrier Rail:	0	
241	Bridge Median Height:		0.00
	Width:		0.00
* 230	Guardrail Loc Dir Rear:	0	
	Fwrd:	0	
	Oppo Dir Rear:	0	
	Fwrd:	0	
244	Approach Slab:	0	
224	Retaining Wall:	1	
233	Posted Speed Limit:	35	
236	Warning Sign:	0	
234	Delineator:	0	
235	Hazard Boards:	1	
237	Utilities Gas:	00	
	W	21	
	Ele	00	
	Telephone:	00	
	Se	22	
247	Lighting Street:	0	
	Naviagtion:	0	
	Aerial:	0	
* 248	County Continuity No.:	13	

BRIDGE INVENTORY DATA LISTING GEORGIA DEPARTMENT OF TRANSPORTATION

Structure ID: 121-0013-0 **Fulton Area 7** SUFF. RATING 41.38

Programming Data

201 Project No.: UNKNOWN
202 Plans Available: 0
249 Prop. Proj. No. CSBRG-0007-00(17
250 Approval Status: 0000
251 P.I. No.: 0007174
252 Contract Date: 02/01/1901
260 Seismic No.: 00000
75 Type Work: 31 1
94 Bridge Imp. Cost: $ 622
95 Roadway Imp. Cost: $ 62
96 Total Imp Cost: $ 932
76 Imp. Length: 000398
97 Imp. Year: 2013
114 Future ADT: 019875 Year: 2030

Hydraulic Data

215 Waterway Data
Highwater Elev.: 0000.0 Year: 1900
Avg. Streambed Elev.: 0000.0 Freq.: 000
Drainage Area: 00000
Area Of Opening: 000000
113 Scour Critical: U
216 Water Depth: 4.2 Br. Height: 20.7
222 Slope Protection: 0
221 Spur Dikes Rear: 0 Fwrd: 0
219 Fender System: 0
220 Dolphin: 0
223 Culvert Cover: 000
Type: 0
No. Barrels: 0
Width: 0.00 Height: 0.00
Length: 0 Apron: 0
* 265 U/W Insp. Area: 0 Diver: ZZZ

* Location I.D. No.: 121-00003D-012.85N

Measurements

* 29 ADT: 013250 Year: 2010
109 % Trucks: 0
* 28 Lanes On: 03 Under: 00
210 No. Tracks On: 00 Under: 00
* 48 Max. Span Length: 0043
* 49 Structure Length: 125
51 Br. Rwdy. Width: 32.50
52 Deck Width: 40.00
* 47 Tot. Horz. Cl: 32.50
50 Curb/Sdewlk Width: 0.00/5.00
32 Approach Rdwy Width: 032
* 229 Shoulder Width:
Rear Lt: 0.00 Type: 7 Rt: 0.00
Fwrd Lt: 0.00 Type: 7 Rt: 0.00
Pavement Width:
Rear: 32.00 Type: 2
Fwrd: 32.00 Type: 2
Intersection Rear: 1 Fwrd: 1
36 Safety Features Br. Rail: 2
Transition: 0
App. G. Rail: 0
App. Rail End: 0
53 Minimum Cl.Over: 99 ' 99 "
Under: N 00 ' 00 "
* 228 Min. Vertical Cl
Act. Odm Dir: 99 ' 99 "
Oppo. Dir: 99 ' 99 "
Posted Odm. Dir: 00 ' 00 "
Oppo. Dir: 00 ' 00 "
55 Lateral Undercl. Rt: N 0.00
56 Lateral Undercl. Lt: 0.00
* 10 Max Min Vert Cl: 99 ' 99 " Dir: 0
39 Nav Vert Cl: 000 Horz: 0000
116 Nav Vert Cl Closed: 000
245 Deck Thickness Main: 9.00
Deck Thick Approach: 0.00
246 Overlay Thickness: 5.00
212 Year Last Painted: Sup: 1989 Sub: 0000

Ratings

65 Inventory Rating Method: 2
63 Inventory Rating Method: 2
66 Inventory Type: 2 Rating: 21
64 Operating Type: 2 Rating: 36
231 Calculated Loads
H-Modified: 20 0
HS-Modified: 25 0
Type 3: 26 0
Type 3s2: 39 0
Timber: 36 0
Piggyback: 40 0
261 H Inventory Rating: 15
262 H Operating Rating: 21
67 Structural Evaluation: 4
58 Deck Condition: 5
59 Superstructure Condition: 5
* 227 Collision Damage: 0
60A Substructure Condition: 5
60B Scour Condition: 6
60C Underwater Condition: N
71 Waterway Adequacy: 2
61 Channel Protection Cond: 3
68 Deck Geometry: 2
69 UnderClr. Horz/Vert: N
72 Appr. Alignment: 7
62 Culvert: N

Posting Data

70 Bridge Posting Required: 5
41 Struct Open, Posted, Cl: A
* 103 Temporary Structure: 0
232 Posted Loads H-Modified: 00
HS-Modified: 00
Type 3: 00
Type3s2: 00
Timber: 00
Piggyback: 00
253 Notification Date 02/01/1901
253 Fed Notify Date: 02/01/1901 0

AGENDA
CONCEPT TEAM MEETING MINUTES
CSBRG-0007-00(174), Fulton, P.I. No. 0007174
Monday August 25, 2014
One Georgia Center
2:00 p.m.

LOCATION: **One Georgia Centre**
600 W Peachtree Center, 4th Floor Conf Rm 409
Atlanta, GA 30308

Attendees:

Name	Title	Company	Phone	Email
Tamaya Huff	Project Manager	GDOT	404-631-1546	thuff@dot.ga.gov
Mike Lobdell	Asst Dist Eng	GDOT	770-986-1765	mlobdell@dot.ga.gov
Adrienne Wise	Dist 7 ROW Team Leader	GDOT	770-986-1551	awise@dot.ga.gov
Susan Beck	Bridge Design Group Leader	GDOT	404-631-1862	sbeck@dot.ga.gov
Mac Cranford	D7 Designe Engineer	GDOT	770-986-1260	maccranford@dot.ga.gov
Lyn Clements	Asst.State Bridge Engineer	GDOT	404-631-1849	lclements@dot.ga.gov
Kevin Gober	Georgia Power	Ga Power	404-506-6601	jkgober@dot.ga.gov
Hannah Pruett	Ecology	GDOT	404-631-1321	hpruett@dot.ga.gov
Sharilyn Myers	Ecology	GDOT	404-631-1594	smeyers@dot.ga.gov
Tim Evans	District 7 Construction	GDOT	404-326-5093	tievans@dot.ga.gov
Raymond Chandler	Utilities- SUE	GDOT	404-631-1360	rchandler@dot.ga.gov
Reginald Crayton	Civil Engineer	City of Atlanta	404-546-1285	rcrayton@atlantaga.gov
Joseph Carpenter	Project Mgr- DWM	City of Atlanta	404-414-9042	jcarpenter@atlantaga.gov
Derek Anderson	Historian	GDOT	404-631-1060	Deanderson@dot.ga.gov
Christina Clay	City of Atlanta	City of Atlanta	404-546-3318	clay@atlantaga.gov
David Borchardt	NEPA	City of Atlanta		dborchardt@dot.ga.gov
Andy Casey	Roadway Design	GDOT	404-631-1700	acasey@dot.ga.gov
Courtney Lovelace	Roadway Design	GDOT	404-631-1640	clovelace@dot.ga.gov
Chris Shean	Roadway Design	GDOT	404-631-1661	csheahan@dot.ga.gov
Billy Lunsford	Construction Project Manager	City of Atlanta	404-750-1021	blunsford@atlantaga.gov
Harris T Dugger	Project Manager	City of Atlanta	770-560-5184	hdugger@atlantaga.gov
John Wisehart	Engineer	Georgia Power	404-938-0292	jwisehar@southernco.com
Rick Ohara	OES	GDOT	404-631-1169	rohara@dot.ga.gov
Miles Kemp	OES Air Noise	GDOT	404-631-1127	mkemp@dot.ga.gov

I. INTRODUCTION

A. INTRODUCTION DESIGN PERSONNEL PRESENT
B. HAVE OTHERS INTRODUCE THEMSELVES
C. REVIEW PROJECT PHOTOS IF NEEDED

II. DESCRIBE PROJECT

The Project Manager described the project as a proposed bridge replacement over Peachtree Creek in Fulton County.

A. REVIEW LAYOUT

The layout was provided for viewing and discussion. No comments were provided on the project layout by those in attendance.

B. EXISTING AVAILABLE INFORMATION

Environmental Impacts

The project is bounded by environmental resources such as Atlanta Memorial Park and Bobby Jones Golf course. The Office of Environmental Services initiated special studies for this project in the Summer of 2013. Studies will be finalized upon the approval of the project concept, and draft hydraulic study.

Stakeholder Meetings

Stakeholder meetings were held with GDOT Project Team staff and the following stakeholders: PATH Foundations, City of Atlanta, Atlanta Memorial Conservancy and Peachtree Battle Neighborhood Alliance to discuss the preliminary concept in October 2013. Additional, stakeholder meetings are planned for this project beginning from October 2014 to November 2014. These meetings will include discussions of the draft project concept and alternatives with stakeholders.

III. COMMENTS FROM EACH OFFICE

A. DESIGN

Initial Concept Overview and History

A draft hydraulic study was completed by Bridge Design. Roadway shared that the draft hydraulic study determined the bridge only needed to be raised 2.7 feet. To the north of the existing bridge is a five legged intersection composed of City of Atlanta local roads. These roads are Woodward Way, which runs east-west and intersects with State Route 3, and Sagamore Drive which intersects perpendicular with Woodward Way, 80 feet to the east of SR 3. The preferred alternative would impact this intersection, but it was noted to be minimum in nature. The project manager requested that any impacts to the intersection should be considered as part of the construction estimate. Design noted this had not been considered and agreed to include this information as discussed.

Alternates Considered

(1) *Preferred: Temporary Bridge 50 feet to the left of the existing bridge centerline, toward Memorial Park.* This alternative was studied to be of the least impact to the surrounding property owners and traveling public. Pedestrian and travelling public would be able to continue travel during construction at reduced speeds for vehicles.

(2) *No Build: No replacement.* Due to the substandard design of the bridge, this alternative was not recommended.

(3) *Close Roadway and Detour Traffic Offsite during construction.* Those affected by the detour include several neighborhood associations in the area, Piedmont Hospital, which is located on Collier Road and Peachtree Road, and E Rivers Elementary School, which is located on corner of Peachtree Battle Ave and Peachtree Road. The volume of impacts to the neighborhood, Emergency Services, and Schools, posed challenges to

implementation of this alternative. While construction time and costs may be reduced, significant impacts to traveling and residential public would be high.

(4) *Temporary Bridge to the East of existing bridge, toward the golf course.* Currently, a large box culvert exists to the east of the existing bridge and would pose challenges to constructing a temporary bridge at this location.

(5) *Close Roadway to turning movements and detour some traffic offsite.* Traffic would be detoured onto local roads Peachtree Battle, Woodward Way, and Sagamore Drive. Due to impacts to the residents in the area, this alternative was not recommended.

(6) *Extend Bridge over Woodward Way.* This would raise the bridge over Woodward Way and realign Sagamore Drive to intersect with Woodward Way. Retaining walls would be required for construction and a temporary bridge to the west of the existing would be implemented. The impacts to residents and pedestrians were determined to be extremely high as well as the cost to construct.

Alternate Chosen

Preferred: Temporary Bridge to the left of the existing bridge centerline, toward Memorial Park.

Supporting Engineering data / decisions

Based on current traffic levels, alternatives 2 to 6 were determined to impose significant traffic impacts to the surrounding neighborhood and traveling public.

Preliminary Traffic Data

Traffic diagrams were not available at the time of the initial concept team meeting held on May 2, 2013. Traffic diagrams have been incorporated into the current report.

Proposed Design Criteria / Speed Design

The preferred alternative will reduce the posted speed limit to 25 mph during construction.

Maintenance of Traffic / Staging / Traffic Control

A representative from the Office of Construction was present for the meeting but unable to provide information on maintenance of traffic, staging, or traffic control during the concept team meeting.

B. BRIDGE

Cost Estimates for Structural Items / Concurrence

Office of Bridges and Structures reviewed the cost estimate and requested additional cost items be added in CES:

- Removal of Existing Bridge
- Detour Bridge

- Construction of Bridge Complete

Time Saving Construction Methods to Minimize Road Closure

The concept report selects the preferred option, which will not require an on-site detour be in place during construction. The Office of Construction did not have a representative prepared to discuss this item during the meeting. The Office of Construction did not have a representative prepared to discuss this item during the meeting.

C. ENVIRONMENTAL

Anticipated Type of Document

The document is presently a Categorical Exclusion document seeking a de minimis finding for Section 4F. The preferred design will require coordination with the City of Atlanta concerning potential impacts to Atlanta Memorial Park as part of project's design, in an effort to maintain a de minimis finding.

Anticipated Public Involvement

Stakeholder meetings are planned for October 2014 to November 2014. A PIOH is planned early 2015, pending the completion of special studies.

History

Survey was completed 12.3.2013. The project footprint contains Bobby Jones Park, and Atlanta Memorial Park as potential resources. There are no issues with current schedule.

Potential for Archeology

Survey is complete. There are no issues with current schedule.

Neighborhoods

Peachtree Battle Alliance

Special Interest Groups

Atlanta Memorial Conservancy

Buckhead Alliance

Context Sensitive Design

Not discussed during the meeting.

Cemeteries

None.

Parks and Recreation

Atlanta Memorial Park

Bobby Jones Golf Course

Need for a Practical Alternatives Report

None.

Wetlands, Streams, Open Waters, Buffers, Floodplains

Streams. There is a stream that currently exists parallel to Northside Drive. Preliminary plans development anticipated in February/March 2015. Ecology will need to review plans as design progresses to determine if impacts exist.

Floodplain. This project is currently located within a floodplain.

Threatened / Endangered Species

None

Erosion and Sedimentation Control

There were no comments shared during the meeting on erosion and sedimentation control.

Air Quality

Type III study is anticipated for this project.

Noise Impacts

A Type III study is anticipated for this project pending the receipt of profiles and project elevations.

Potential Permits – USACOE 404, TVA, USCG, SBV. The current schedule assumes permits will be required but a final determination will occur pending approval of concept.

D. UTILITIES

Preliminary Existing Utilities – Any located on Bridge

There were no representatives present for District 7 Utilities. There are significant utilities are located on the bridge. A meeting is planned with District 7 Utilities and the corresponding utility companies in October 2014 to discuss potential relocation options. Coordination with District 7 on this is requested by end of September 2014.

Discuss Utility Cost Estimate

There were no representatives present from District 7 Utilities to discuss the Utility Cost Estimate.

Lead discussion on Public Interest Determination / Utility Risk Management Plan – develop plan

There were no representatives present from District 7 Utilities to discuss the Utility Risk Management Plan. A meeting is planned October 2014 to discuss Utility Risks.

E. RIGHT OF WAY

Existing ROW

Initial Parcel Count – Land Owners

There are a total of 9 parcels associated with the preferred alternative.

Any Relocatees?

None at this time for preferred alternative.

Discuss Initial ROW Cost Estimate

A revised ROW cost estimate will be needed for this project.

F. TRAFFIC OPERATIONS

Potential Concerns

Ensuring pedestrian accommodation is maintained during construction.

G. CONSTRUCTION

There were no representatives from the Office of Construction prepared to discuss the project during the meeting.

Constructability of project

Construction limits adequate

Location for staging materials, crane setup

Ability to set beams / adequate room

H. MAINTENANCE

Any known existing maintenance issues

There were no representatives present from the Office of Maintenance at the meeting.

I. LOCATION

Status of Field Surveys and Database

The survey for this project was completed June 2013, with minor revisions completed in July 2014.

J. DISTRICT ENGINEER / AREA OFFICE

Existing Maintenance Issues – Drainage/Pavement/Bridge/Erosion

No comments were shared during the meeting.

District Public Official / Contacts and Concerns

The project manager noted concerns shared by the City for any design that significantly redistributes traffic.

Other Items

K. DISTRICT PRECONSTRUCTION

Other Potential Nearby Projects

The District Design Engineer was present to discuss concerns held on behalf of the District Preconstruction Engineer. It was noted that the construction estimate required additional items not originally considered by the Office of Roadway Design. The District Design Engineer chose to contact Roadway Design following the meeting to discuss.

L. PROGRAM DELIVERY

Proposed Project Schedule – Concurrence/Comments

Roadway Design noted the schedule accounted for a high level of risk and likely Roadway would be able to deliver in advance of what was originally anticipated.

Ecology noted that the current schedule does not account for the recent policy that allows PFPR to be held at the completion of special studies. The project manager noted that deliverables can be submitted in advance of the proposed baseline and is encouraged if risks are minimized as project development progresses. However, a number of risks have not yet been minimized, these include if the Section 4F de minimis action is not achievable, and if the environmental document evolves from a CE a more stringent document type.

Keep tasks updated in P6 / Tpro

No comments.

Proposed Project Budget

No comments.

M. ACTION ITEMS NEEDED AND PROPOSED DELIVERY DATES

Roadway Design noted that preliminary plans would be completed in March 2015.

A meeting in October is planned for the utility companies to discuss relocation.

N. CITY COMMENTS/DISCUSSION

No Comments.

IV. CONCLUSION AND CLOSING REMARKS

GDOT Concept Team Meeting Minutes

PREPARED BY: Courtney Lovelace
DATE: May 2, 2013
LOCATION: District 7 Office
SUBJECT: Draft Concept Report Review, PI No. 0007174, Fulton County

ATTENDEES:

Charner Rogers-Register	GDOT Program Delivery
Chris Rudd	GDOT Roadway Design
Courtney Lovelace	GDOT Roadway Design
Theresa Holder	GDOT Roadway Design
Michelle Pate	GDOT Engineering Services
Iris Hernandez	GDOT Environmental Services
Theresa Piazza	GDOT Environmental Services
Anthony Tate	GDOT Environmental Services
Sean Diehl	GDOT Environmental Services
Clyde Cunningham	GDOT District 7 - Utilities
Brad Humphrey	GDOT District 7 - Traffic Operations
Shun Pringle	GDOT District 7 - Construction
Scott Lee	GDOT District 7 - Preconstruction
Mac Cranford	GDOT District 7 - Design

Conference Call:

Ben Rabun	GDOT Bridge Design

This meeting is being held to review the Draft Concept Report for the Bridge Replacement project located on SR 3 over Peachtree Creek in Fulton County.

- CRogers calls the meeting to order, stating that this meeting is to go over the concept report.
- Introductions are done around the table.
- CRogers begins by discussing the project schedule. She states that the project is behind schedule, but it is okay and has time to correct.
- The meeting is handed over to CRudd to begin the review of the Draft Concept Report.
- CRudd begins reviewing the Location Map, the Project Justification Statement, and the Description of the proposed project.
- CRudd explains that the project is not on a bike route, but is listed as such on TPro. He says that while not on a designated state bike route, accommodations will be provided.

IHernandez ask what type of accommodations. He explains the sidewalk on the bridge and the multi-use path.

- While discussing this, CRudd moves ahead to discuss the alternatives for the bridge replacement.

- The Preferred alternate is explained. MCranford asks about the location of the temporary bridge, saying that traffic would have trouble making the turns to access the temporary bridge. MPate also questions the detour taper and if this project has enough space for the temporary bridge. MCranford recommends placing the bridge on a curve. CRudd responds by saying that would require more right-of-way from the corner lot, only for a temporary bridge.

- MCranford asks for the truck percentage and says that cars and trucks would have trouble with the turn onto the temporary bridge. CRudd responds that Design hasn't yet received side road traffic numbers and that this alternative would be reviewed in AutoTurn and a simulation would be ran.

- CRudd continues with the bridge alternatives.

- SLee asks if closing off the turning movements at the intersection, instead of a full detour. He points out that most of the surrounding area is residential, which would be easier to detour.

- SLee asks which options would be shown at PIOH, saying that the public would have a problem if presented with all options. CRudd responds by saying that only the preferred option is usually presented at PIOH.

- CRudd continues with bridge alternatives.

- MPate mentions adding utilities to the reasons to exclude Alternative 2, saying it would raise the cost.

- BHumphrey traffic questions the cost difference between the preferred option and alternate 2. CRudd responds that the preferred alternate is a more in-depth cost analysis.

- CRudd continues to review the Context Sensitive Solutions from the Draft Concept Report.

- MCranford states that crash data is available up to 2012. CRudd responds saying that it is hard for Roadway Design to get data after 2009, but will check on getting more up-to-date data.

- MPate says that an urban setting of the project requires a 10 ft shoulder. CRudd responds with saying that the project is an urban section but a rural shoulder is currently out there. MPate says okay, but to be specific in reasoning and to document it in the concept report, be it with an asterisk or another method.

- BRabun says that curb and gutter are currently present on the project. Also states that drainage inlets are within the project limits. SLee says that the existing curb & gutter are granite, but they are possibly buried or partially overlaid.

- SLee asks how the sidewalks would transition. CRudd responds that the roadway would have to taper.

- SLee mentions the high pedestrian numbers. CRudd responds that the overlapping project specifically addresses pedestrians. MPate says if the intersection is touched, the whole intersection would need to be upgraded. She also states that it must be in the concept that the intersection will not be improved. CRudd responds that only roadway items will be included in this project.

- SLee says the overlapping project will be Let in July. They recommend more coordination with the other project. Environmental asks about how the PIOH will be handled. Construction for connecting project could be under way when this PIOH is held. And our construction could conflict with overlapping project, by removing items that were recently constructed. THolder responds that more coordination will occur.

- CCunningham says they will provide list of utility and owners to Roadway Design. Also states leaning toward no public interest determination policy necessary. Would recommend SUE for this project.

- SLee brings out right-of-way plans from the overlapping project. Says the trail used for pedestrians and intersection will be upgraded. Also states that the adjacent parks are listed at historical property.

- SLee recommends removing the sidewalk to the east side of the bridge, pushing pedestrians to the trail.

- BRabun asks about utilities. He says the two lines attached to the bridge are debris catchers. He asks if the lines are gravity lines and questions how they will be replaced. CCunningham respond that the 1st utility submission will obtain all this information. BRabun states that this information is needed prior to 1st submission for the bridge design.

- CRudd continues reviewing the concept. MPate mentions that the bad skew angle at the intersection would need a design variance. Says if the intersection was not being touched, it needs to be said in the concept report.

- BRabun says no design exceptions or variances are anticipated, but the hydraulic study is needed. He also asks if the bridge has a history of flooding and that will need to be addressed.

- IHernandez takes over the concept review for the Environmental section. Says a nationwide permit is needed for Peachtree Creek. There will also need some work with FHWA for the public facilities (parks), which is a four month process.

- IHernandez states that Air & Noise isn't forseen as being an issue. She also mentions that a detour meeting will be necessary if any of the intersection is closed down.

- MCranford asks for the disturbed area, saying if less than an acre, will affect the environmental permits. CRudd responds that the disturbed area hasn't be calculated yet and will be reviewed.

- BRabun asks if the power utilities are only distribution. CCunningham respond that it is both transmission and distribution. BRabun also says that clearance from all poles will be necessary for construction.

- BRabun points out the gauging station for the creek and that coordination with USGS will be needed.

- MPate says that lighting is currently on the project and will need to be replaced.

- MCranford recommends adding the Let date of the connecting project to the concept report.

- In the cost estimate, MCranford says that the temporary signal costs seem low, and recommends adding the final signal costs. Removing the field office is recommended by SPringle, because there is no area to place it.

- Regarding the layout, MCranford says that the shift to the temporary bridge and the temporary path is awkward for drivers. Placing the temporary bridge in a curve is recommended.

- MPate asks if 10 ft spacing between temporary bridge and existing bridge is enough space for construction. MCranford responds that it is enough space.

- MPate asks if a temporary barrier can be used on a temporary bridge, as shown on the typical sections. BRabun responds no, a bolted barrier would be placed on the temporary bridge.

- MCranford recommends added the permanent signal costs to the Cost Estimate.

- BRabun says he will supply better a Bridge Inventory Data sheet to Roadway Design.

- THolder asks about survey. CRogers responds that she will send out a request.

- MPate says coordinate water and sewer early in the process, because the information will need to be in the environmental document.

- CRogers calls the meeting.

GDOT Roadway Design/Bridge Design Initial Meeting
PI No. 0007174, Fulton County, Meeting Minutes

February 13, 2013

Attendees: Courtney Lovelace, Chris Rudd, Lyn Clements

Next meeting: TBD

I. Meeting Agenda

- Review and discuss the staging alternatives for bridge replacement

II. Minutes

- Chris states that this meeting is to review Roadway Design's proposed alternatives to the bridge replacement over Peachtree Creek in Fulton County.

- Lyn begins by mentioning some photos of the area. The utilities are displayed in some of the photos. Some will still need to be identified.

- Chris begins with the 1st alternative, a temporary bridge to the east, near the golf course.

- Lyn mentions that the easiest possibility is placing the bridge back in the same location. She also states that no hydraulic study was done on the bridge when it was built. She says that a single span bridge is an option, with no bent in the natural creek bed.

- Chris relays to Lyn that Roadway Design wants to maintain traffic on the bridge through construction.

- Lyn replies that Bridge believes that closing the bridge and doing accelerated construction. She states that the flood bridges from a few years ago were completed in 6 months.

- The topic of obstacles is brought up. Lyn mentions that if the golf course, to the east of the existing bridge, is a public course, it will have to be treated similar to a church, in terms of impact. Bridge suggests a temporary bridge to the west, near the park. This is Roadway Design's 2nd alternative.

- Lyn says that pedestrians need to be kept in mind. A pedestrian walkway is connected to the Westside of the existing bridge.

- Lyn assumes by looking at pictures, a 30 inch beam depth over 3 spans, plus 6 inch of bridge deck, so an existing depth of 3 ft. A mod 1 beam use would be give a new bridge a depth of 3.3 ft, and a type 2 beam would give a 3.9 ft depth. Both of these would lead to an increase in existing grade.

- Lyn mentions that detouring traffic and shutting down the road are the best options.

- Lyn states that since there are no existing plans, she would not be comfortable cutting into the substructure of the bridge to maintain traffic. Also says that new bents cannot be built while maintaining traffic.

- Utilities shown in picture are discussed. Lyn, looking at the Bridge Inventory Data, assumes that sewage is on the non pedestrian side of the bridge (nearest the pump station), which could mean that the pipes are using gravity to flow. This affects the elevation of the new bridge. Lyn mentions that the new utilities may not be able to be attached to the new bridge without raising the elevation. The beam depth may be increased because the use of pre-stressed beams is recommended.

- Lyn states that the utilities that are currently attached to the bridge will need to be moved prior to any construction. And mentions that bridge has previously seen utilities being buried under a stream, but can cause multiple issues. She also mentions that pedestals in the creek are a possibility for the utilities if they cannot be placed on the bridge. Also that any temporary bridge must take into account utility relocation.

- The issue of constructability is raised. Lyn states that given the length of the existing bridge, the use of 2 cranes for construction is a possibility. One will be placed on each side of the roadway. If a 3-span bridge is used, a crane may be needed I the creek bed. A middle span cannot be placed from the end platform. A temporary work bridge or creek bed placement for the crane may be necessary.

- If a temporary bridge is placed on the park side (west) of the existing bridge, construction will be on the golf course side.

- Lyn notices that a 10-14' multiuse path will probably be necessary, and both sides of the bridge will need sidewalks and bike lanes.

- Lyn suggests using the sidewalk as a lane during construction, then putting in a sidewalk on roadway completion.

- Lyn calculates that the new bridge will need to be around 60.5 ft wide gutter to gutter. This consists of 3 – 11 ft lanes, bike lanes on each side, 2 ft shoulders, a sidewalk on one side and a 10 ft multiuse path on the other. According to the Bridge Inventory Data the existing bridge is 32.5 ft gutter to gutter.

- She says that any option would need to ne 10-15 ft away from the existing bridge to give construction enough space to clear the footings.

- Lyn suggests that a portion of the new bridge could be built ad traffic can be shifted to that portion in order to complete the rest.

- Lyn states that the user costs for each option is very important.
- Lyn says that it is not the best idea to split traffic on each side of the existing bridge. This would confine the construction equipment to a small middle area.
- Chris states that Roadway Design would work something up for the concept report and ends the meeting.