ORIGINAL TO GENERAL FILES

DEPARTMENT OF TRANSPORTATION
STATE OF GEORGIA

OFFICE OF DESIGN POLICY & SUPPORT
INTERDEPARTMENTAL CORRESPONDENCE

FILE P.I. # 0007036
CSBRG-0007-00(036)
Harris County
GDOT District 3 - Thomaston
SR 219 Bridge Replacement @
Mountain Oak Creek

OFFICE Design Policy & Support

DATE 3/26/2015

FROM for Brent Story, State Design Policy Engineer

TO SEE DISTRIBUTION

SUBJECT **APPROVED CONCEPT REPORT**

Attached is the approved Concept Report for the above subject project.

Attachment

DISTRIBUTION:

Glenn Bowman, Director of Engineering
Joe Carpenter, Director of P3/Program Delivery
Genetha Rice-Singleton, Assistant Director of P3/Program Delivery
Albert Shelby, State Program Delivery Engineer
Bobby Hilliard, Program Control Administrator
Cindy VanDyke, State Transportation Planning Administrator
Hiral Patel, State Environmental Administrator
Ben Rabun, State Bridge Engineer
Andrew Heath, State Traffic Engineer
Angela Robinson, Financial Management Administrator
Lisa Myers, State Project Review Engineer
Charles "Chuck" Hasty, State Materials Engineer
Mike Bolden, State Utilities Engineer
Richard Cobb, Statewide Location Bureau Chief
Andy Casey, State Roadway Design Engineer
Attn: Jason Mobley, District Design Engineer
Thomas Howell, District Engineer
Dan Pass, District Preconstruction Engineer
Kerry Gore, District Utilities Engineer
Sue Anne Decker, Project Manager
BOARD MEMBER - 3rd Congressional District

DEPARTMENT OF TRANSPORTATION
STATE OF GEORGIA
PROJECT CONCEPT REPORT

Project Type: Bridge Replacement
GDOT District: 3
Federal Route Number: N/A

P.I. Number: 0007036
County: Harris
State Route Number: 219

Replacing a bridge along SR 219 at Mountain Oak Creek 1.5 miles South of Whitesville.

Submitted for approval:

District Engineer – District 3	DATE 1/9/15
Albert Shelby BWK State Program Delivery Engineer	DATE 1/21/15
Sue Anne Decker KESD GDOT Project Manager	DATE 1.14.15

Recommended for approval:

HIRAL PATEL*/EKP State Environmental Administrator	DATE 1/23/2015
ANDREW HEATH*/EKP State Traffic Engineer	DATE 1/28/2015
LISA MYERS*/EKP Project Review Engineer	DATE 1/26/2015
YOLONDA PRIDE-FOSTER*/EKP FOR State Utilities Engineer	DATE 1/29/2015
BEN RABUN*/EKP State Bridge Engineer	DATE 2/10/2015
State Transportation Financial Management Administrator	DATE

☐ MPO Area: This project is consistent with the MPO adopted Regional Transportation Plan (RTP)/Long Range Transportation Plan (LRTP).

☒ Rural Area: This project is consistent with the goals outlined in the Statewide Transportation Plan (SWTP) and/or is included in the State Transportation Improvement

CINDY VAN DYKE*/EKP State Transportation Planning Administrator	Date 1/30/2015

*- RECOMMENDATION ON FILE

PROJECT LOCATION MAP

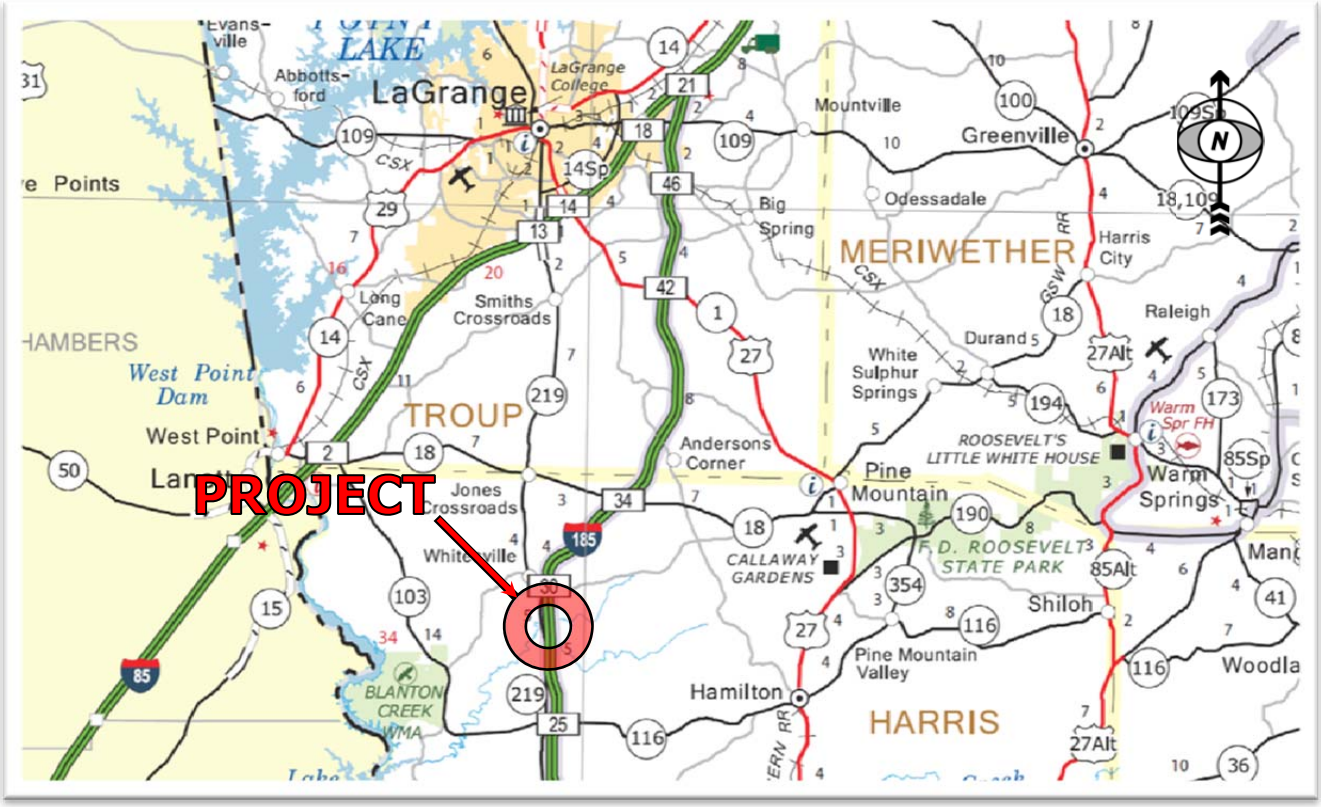

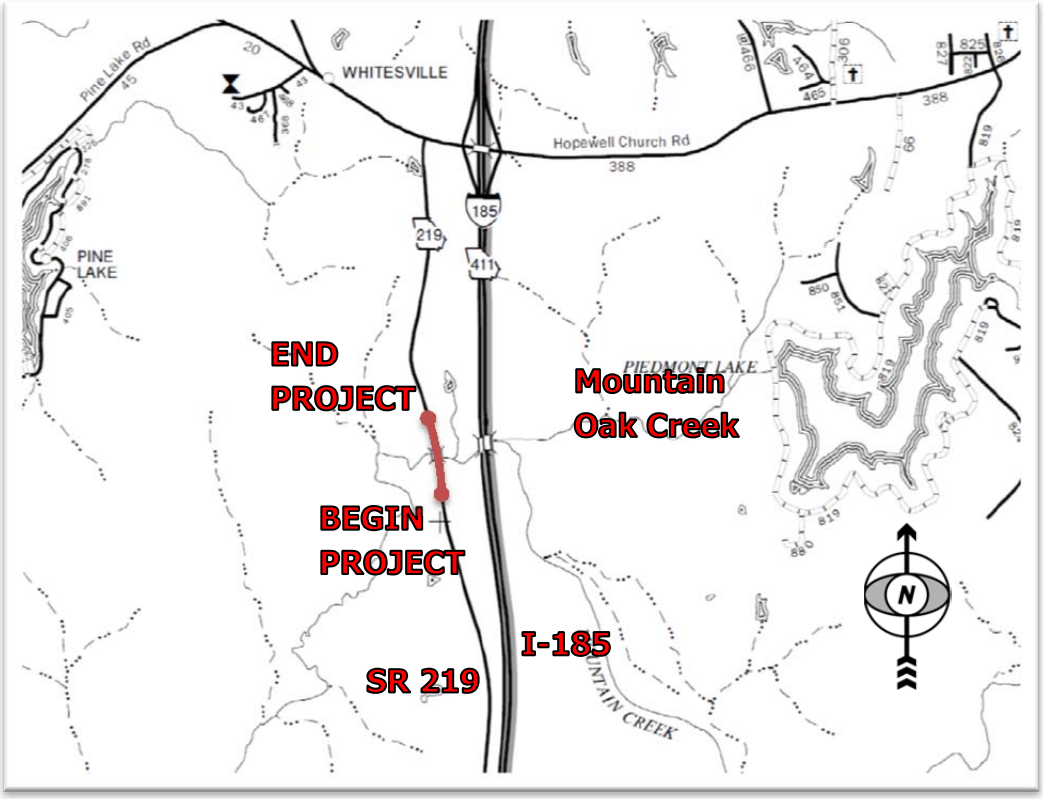

PLANNING AND BACKGROUND

Project Justification Statement: This bridge (Structure ID 154-00-28-0; SR 219 over Mountain Oak Creek) was built in 1949. The Bridge consists of one span of reinforced concrete deck girders and three spans of steel girders on concrete columns and caps. The design vehicle used for this bridge is below the current standards. The overall condition of this bridge would be classified as satisfactory to poor. The deck is in poor condition with advanced concrete cracking and spalling. The superstructure is in fair condition with minor steel deterioration and minor concrete cracking. The substructure is in satisfactory condition with some minor concrete cracking. Due to the structural integrity of the bridge and the poor condition of the deck, replacement is recommended.

Project Justification Statement provided by: GDOT Office of Bridge Design

Existing conditions: Two-lane roadway consists of 11' lanes and 2' unpaved shoulders with a reinforced concrete bridge crossing Mountain Oak Creek, as measured in the field. There are no intersections within the project limits. There are overhead utility distribution lines along the east side of the roadway. Two service lines cross the roadway, one south of the bridge and one north, to adjacent properties. Underground telephone lines are located on either side of the roadway and cross the creek above ground. A water line is located on the east side of the roadway but is not attached to the bridge.

Other projects in the area: Project is within the limits of resurfacing and maintenance project M005259. To avoid projects overlapping coordination may be required.

MPO: None

TIP #: N/A

TIA Regional Commission: River Valley

RC Project ID: None

Congressional District(s): 003

Federal Oversight: Exempt

Projected Traffic: ADT

Current Year (2011): 500
Open Year (2021): 700
Design Year (2041): 1200

24 Hour Truck Percentage: 6%

Traffic Projections Performed by: GDOT Office of Planning

Functional Classification (Mainline): Rural Major Collector

Complete Streets - Bicycle, Pedestrian, and/or Transit Standard Warrants:

Warrants met: ☐ None ☒ Bicycle ☐ Pedestrian ☐ Transit

Route 5 of the Statewide Bicycle Route Network follows SR 219 south of Whitesville. Appropriate bicycle accommodations will be required. This will be accomplished by providing 6.5 feet of paved shoulder and 6.5 feet of shoulder on the bridge for a buffered bike lane. Bicyclist may choose to use the shoulder or share the road, as they are currently doing, after the completion of the project.

Is this a 3R (Resurfacing, Restoration, & Rehabilitation) Project? No

Pavement Evaluation and Recommendations:

Preliminary Pavement Evaluation Summary Report Required? ☒ No ☐ Yes
Preliminary Pavement Type Selection Report Required? ☒ No ☐ Yes
Feasible Pavement Alternatives: ☒ HMA ☐ PCC ☐ HMA & PCC

DESIGN AND STRUCTURAL

Description of the proposed project: The proposed replacement bridge will be constructed on SR 219 at Mountain Oak Creek 1.5 miles mouth of Whitesville and tie-in with the existing road alignment. The project length is approximately 0.4 miles.

Major Structures:

Structure	Existing	Proposed
145-0028-0 1.5 miles south of Whitesville	Bridge length is 175', 2-11' lanes, horizontal clear width of 24', and sufficiency rating of 55.43.	Proposed bridge will have a 37' clear width consisting of 2-12' lanes and a 6.5' outside shoulder on either side. Design based on GDOT Bridge and Structures Design Manual.

Mainline Design Features: SR 219, Rural Major Collector

Feature	Existing*	Standard/Guidelines**	Proposed
Typical Section			
- **Number of Lanes**	**2**	**N/A**	**2**
- **Lane Width(s)**	**11 ft**	**11-12 ft**	**12 ft**
- **Median Width & Type**	**N/A**	**N/A**	**N/A**
- **Outside Shoulder or Border Area Width**	**2 ft**	**6.5 ft**	**10 ft**
- **Outside Shoulder Slope**	**6%**	**6%**	**6%**
- **Inside Shoulder Width**	**N/A**	**N/A**	**N/A**
- **Sidewalks**	**N/A**	**N/A**	**N/A**
- **Auxiliary Lanes**	**N/A**	**N/A**	**N/A**
- **Bike Lanes** 6.5 ft shoulder with space for 4 ft bike travel way	**N/A**	**4 ft**	**4 ft**
Posted Speed	**55 mph**	**N/A**	**55 mph**
Design Speed	**40 mph**	**≥ 40 mph**	**55 mph**
Min Horizontal Curve Radius	**955 ft**	**444 ft**	**≥ 960 ft**
Maximum Superelevation Rate	**8%**	**6% or 8%**	**8%**
Maximum Grade	**6%**	**7%**	**≤ 7%**
Access Control	**By permit**	**By permit**	**By permit**
Design Vehicle	**Unknown**	**SU**	**WB-40**
Pavement Type	**Asphalt**	**N/A**	**Asphalt**

*According to original design plans and field measurements
**According to current design policy if applicable

Major Interchanges/Intersections: N/A

Lighting required: ☒ No ☐ Yes

Off-site Detours Anticipated: ☐ No ☒ Yes

The majority of traffic using a detour, while the bridge is closed for construction, is expected to originate outside the segment of SR 219 between SR 101/116 and Hopewell Church Rd. Accordingly, a proposed detour route has been defined which considers this "through" traffic. The detour length is approximately 5.1 miles and utilizes I-185. It is recognized that traffic originating from SR 219 between these two roadways will be longer. The detour will run from the intersection of SR 219 and SR 103/116, 3.4 miles south of the project, east to I-185 at interchange exit #25. The route will follow I-185 to Hopewell Church Rd at interchange exit #30 and follow Hopewell Church Rd west to the intersection with SR 219, 1.2 miles north of the project. The detour route is shown on a layout provided as Attachment 8 to this report. A Detour Meeting and Detour Report will be required.

Transportation Management Plan [TMP] Required: ☐ No ☒ Yes
Project classified as: ☒ Non-significant ☐ Significant
TMP Components Anticipated: ☒ TTC ☐ TO ☒ PI

Design Exceptions to FHWA/AASHTO controlling criteria anticipated:

FHWA/AASHTO Controlling Criteria	No	Undeter-mined	Yes	Approval Date (if applicable)
1. Design Speed	☒	☐	☐	
2. Lane Width	☒	☐	☐	
3. Shoulder Width	☒	☐	☐	
4. Bridge Width	☒	☐	☐	
5. Horizontal Alignment	☒	☐	☐	
6. Superelevation	☒	☐	☐	
7. Vertical Alignment	☒	☐	☐	
8. Grade	☒	☐	☐	
9. Stopping Sight Distance	☒	☐	☐	
10. Cross Slope	☒	☐	☐	
11. Vertical Clearance	☒	☐	☐	
12. Lateral Offset to Obstruction	☒	☐	☐	
13. Bridge Structural Capacity	☒	☐	☐	

Design Variances to GDOT Standard Criteria anticipated:

GDOT Standard Criteria	Reviewing Office	No	Undeter-mined	Yes	Approval Date (if applicable)
1. Access Control/Median Openings	DP&S	☒	☐	☐	
2. Intersection Sight Distance	DP&S	☒	☐	☐	
3. Intersection Skew Angle	DP&S	☒	☐	☐	
4. Lateral Offset to Obstruction	DP&S	☒	☐	☐	
5. Rumble Strips	DP&S	☒	☐	☐	
6. Safety Edge	DP&S	☒	☐	☐	
7. Median Usage	DP&S	☒	☐	☐	
8. Roundabout Illumination Levels	DP&S	☒	☐	☐	
9. Complete Streets	DP&S	☒	☐	☐	
10. ADA & PROWAG	DP&S	☒	☐	☐	
11. GDOT Construction Standards	DP&S	☒	☐	☐	
12. GDOT Drainage Manual	DP&S	☒	☐	☐	
13. GDOT Bridge & Structural Manual	Bridges	☒	☐	☐	

VE Study anticipated: ☒ No ☐ Yes ☐ Completed – Date:

UTILITY AND PROPERTY

Temporary State Route needed: ☒ No ☐ Yes ☐ Undetermined

Railroad Involvement: N/A

Utility Involvements:
Telecommunications: BellSouth Telecommunications
Electrical: Diverse Power
Water: Harris County Water Works
Cable TV: Charter Communications

SUE Required: ☒ No ☐ Yes ☐ Undetermined

Public Interest Determination Policy and Procedure recommended (Utilities)? ☒ No ☐ Yes

Right-of-Way (ROW): Existing width: 100-160 ft Proposed width: 100-160 ft

Required Right-of-Way anticipated: ☐ None ☒ Yes ☐ Undetermined
Easements anticipated: ☐ None ☐ Temporary ☐ Permanent ☒ Utility ☐ Other

Anticipated total number of impacted parcels:		5
Displacements anticipated:	Businesses:	0
	Residences:	0
	Other:	0
	Total Displacements:	0

Location and Design approval: ☐ Not Required ☒ Required

CONTEXT SENSITIVE SOLUTIONS

Issues of Concern: N/A

Context Sensitive Solutions Proposed: N/A

ENVIRONMENTAL & PERMITS

Anticipated Environmental Document:
GEPA: ☐ **NEPA:** ☒ CE ☐ EA/FONSI ☐ EIS

MS4 Permit Compliance – Is the project located in a MS4 area? ☒ No ☐ Yes

Environmental Permits/Variances/Commitments/Coordination anticipated:

Permit/ Variance/ Commitment/ Coordination Anticipated	No	Yes	Remarks
1. U.S. Coast Guard Permit	☒	☐	
2. Forest Service/Corps Land	☒	☐	
3. CWA Section 404 Permit	☐	☒	Possible
4. Tennessee Valley Authority Permit	☒	☐	
5. Buffer Variance	☐	☒	Possible
6. Coastal Zone Management Coordination	☒	☐	
7. NPDES	☐	☒	
8. FEMA	☐	☒	Possible
9. Cemetery Permit	☒	☐	
10. Other Permits	☒	☐	
11. Other Commitments	☒	☐	
12. Other Coordination	☒	☐	

Is a PAR required? ☒ No ☐ Yes ☐ Completed – Date:

Environmental Comments and Information:
NEPA/GEPA: CE is not approved.

Ecology: Mountain Oak Creek does not violate criteria for Impaired Fish Community and Impaired Macroinvertebrate Community and there are no streams located within one mile of the project that violate those criteria. The bridge will accommodate all fish passage in Mountain Oak Creek. Any cross drains in the project will not carry any streams and do not need to accommodate fish passage. The ecology report has not been completed. The anticipated completion date for the report is May 2015.

History: There are no properties listed in or considered eligible for listing in the National Register within the construction limits for this project.

Archeology: The archaeology field survey has not been completed. The anticipated completion date for the report is October 5, 2015.

Air Quality:

Is the project located in a PM 2.5 Non-attainment area?	☒ No	☐ Yes
Is the project located in an Ozone Non-attainment area?	☒ No	☐ Yes
Is a Carbon Monoxide hotspot analysis required?	☒ No	☐ Yes

Noise Effects: A Type III noise analysis with no modeling required will be prepared for this project.

Public Involvement: An off-site detour is anticipated, public involvement will be required.

Major stakeholders: Major stakeholders are the property owners and the traveling public.

CONSTRUCTION

Issues potentially affecting constructability/construction schedule: N/A

Early Completion Incentives recommended for consideration: ☒ No ☐ Yes

COORDINATION, ACTIVITIES, RESPONSIBILITIES, AND COSTS

Initial Concept Meeting: N/A

Concept Meeting: The concept meeting was held November 13, 2014 and the minutes are attached. At the meeting, an overview of the projects and alternatives were given. An update of the ecology survey and report was provided. The detail of the shoulder was discussed for accommodating bicycles and rumble strips. And changes in the schedule were made for the PIOH and the hydraulic study.

Other coordination to date: There are no airports or aviation facilities within 5 miles of the project, so FAA coordination is not needed. A PTIP meeting was held on March 4, 2013 and the minutes are attached. At the meeting, the deficiencies of the bridge were discussed and it was stated that no utilities are attached to the bridge. Traffic volumes were given but further coordination was requested to verify volumes. I-185 was chosen as the off-site detour due to close proximity. District 3 will complete the concept, survey, and roadway activities.

Project Activity	Party Responsible for Performing Task(s)
Concept Development	GDOT District 3 Design
Design	GDOT District 3 Design
Right-of-Way Acquisition	GDOT District 3 Right of Way
Utility Relocation (Construction)	Utility Owners
Utility Coordination (Pre Let)	GDOT
Letting to Contract	GDOT Bidding Administration
Construction Supervision	GDOT District 3 Construction
Providing Material Pits	Contractor
Providing Detours	GDOT and Contractor
Environmental Studies, Documents, & Permits	GDOT Office of Environmental Services
Environmental Mitigation	GDOT Office of Environmental Services
Construction Inspection & Materials Testing	GDOT District 3 Construction & GDOT Office of Materials

Project Cost Estimate Summary and Funding Responsibilities:

	Breakdown Of PE	ROW	Reimbursable Utility	CST*	Environmental Mitigation	Total Cost
Funded By	GDOT	GDOT	GDOT	GDOT EKP $3,515,533.10	GDOT	$4,212,674.70 EKP
$ Amount	$519,713.63	$159,000.00	$18,428.00	~~$3,201,967.86~~		~~$3,899,109.49~~
Date of Estimate	5/6/09	9/18/14	11/13/14	9/18/14		

*CST Cost includes: Construction, Engineering and Inspection, Contingencies, and Liquid AC Cost Adjustment.

ALTERNATIVES DISCUSSION

Alternative selection:

Alternative 1 (Preferred): Replace existing bridge and reconstruct SR 219 with an off-site detour on I-185			
Estimated Property Impacts:	**5**	**Estimated Total Cost:**	**$3,899,109.49**
Estimated ROW Cost:	**$159,000.00**	**Estimated CST Time:**	**12 months**
Rationale: Interstate I-185 runs parallel to SR 219 with access points before and after the project, providing a convenient detour for traffic. This alternative would replace the existing bridge structure with minimal right-of-way acquisition and impacts to environmental resources for reconstruction of the approach.			

No-Build Alternative: Existing bridge remains in place and SR 219 is not reconstructed			
Estimated Property Impacts:	**None**	**Estimated Total Cost:**	**$0.00**
Estimated ROW Cost:	**$0.00**	**Estimated CST Time:**	**0 months**
Rationale: The design vehicle used for this bridge is below the current standards. The overall condition of this bridge would be classified as satisfactory to poor. Due to the structural integrity of the bridge and the poor condition of the deck, replacement is recommended.			

Alternative 2: Construct a new bridge next to the existing bridge and realign SR 219 to the new bridge			
Estimated Property Impacts:	**2**	**Estimated Total Cost:**	**$4,101,014.25**
Estimated ROW Cost:	**$360,904.76**	**Estimated CST Time:**	**12 months**
Rationale: Locating the bridge in a new location would allow traffic to continue to travel on SR 219 during construction. However, this alternative would require the road to be realigned and the acquisition of additional right-of-way necessary for the realignment. The new alignment would also have an additional curve and lengthen the project to tie into the existing roadway. The realignment design would not be desirable given the existing conditions as well as additional property impacts.			

Alternative 3: Construct a temporary bridge and road to detour traffic while replacing the existing bridge			
Estimated Property Impacts:	**5**	**Estimated Total Cost:**	**$5,203,419.96**
Estimated ROW Cost:	**$446,714.29**	**Estimated CST Time:**	**18 months**
Rationale: A temporary bridge beside the existing structure would provide a route for traffic to use during construction. Access to the bridge would require a temporary road to be built and additional right-of-way will be necessary. This alternative is undesirable due to much higher construction costs and impacts as compared to Alternate 1.			

Alternative 4: Construct bridge in stages to allow traffic to drive through construction site			
Estimated Property Impacts:	**5**	**Estimated Total Cost:**	**$4,076,511.01**
Estimated ROW Cost:	**$159,000.00**	**Estimated CST Time:**	**18 months**
Rationale: Constructing the bridge in stages would allow traffic to continue to travel SR 219, but will require constant monitoring across the bridge and lengthen the time for construction. Traffic volumes are low and it would not be effective to use this type of traffic control with I-185 close by as a viable detour route during construction.			

LIST OF ATTACHMENTS/SUPPORTING DATA

1. Concept Layout
2. Typical sections
3. Detailed Cost Estimates:
    a. Construction including Engineering and Inspection
    b. Completed Liquid AC Cost Adjustment Forms
    c. Right-of-Way
    d. Utilities
4. Traffic Assignment
5. S I & A Report(s) (Bridge/Structural Inventory Report(s))
6. Minutes of PTIP meeting
7. Minutes of Concept meetings
8. Detour Layout

Concur: _____
Director of Engineering

Approve: Meg Pirkle _____ 3·20·15
Chief Engineer Date

1/7/2015 4:18:11 PM
USER:01021242

GPLOT-V8
gplotborder-V8I-PO-color.tbl

Concept Layout.dgn

STATE	PROJECT NUMBER	SHEET NO.	TOTAL SHEETS
GA	HARRIS 0007036		

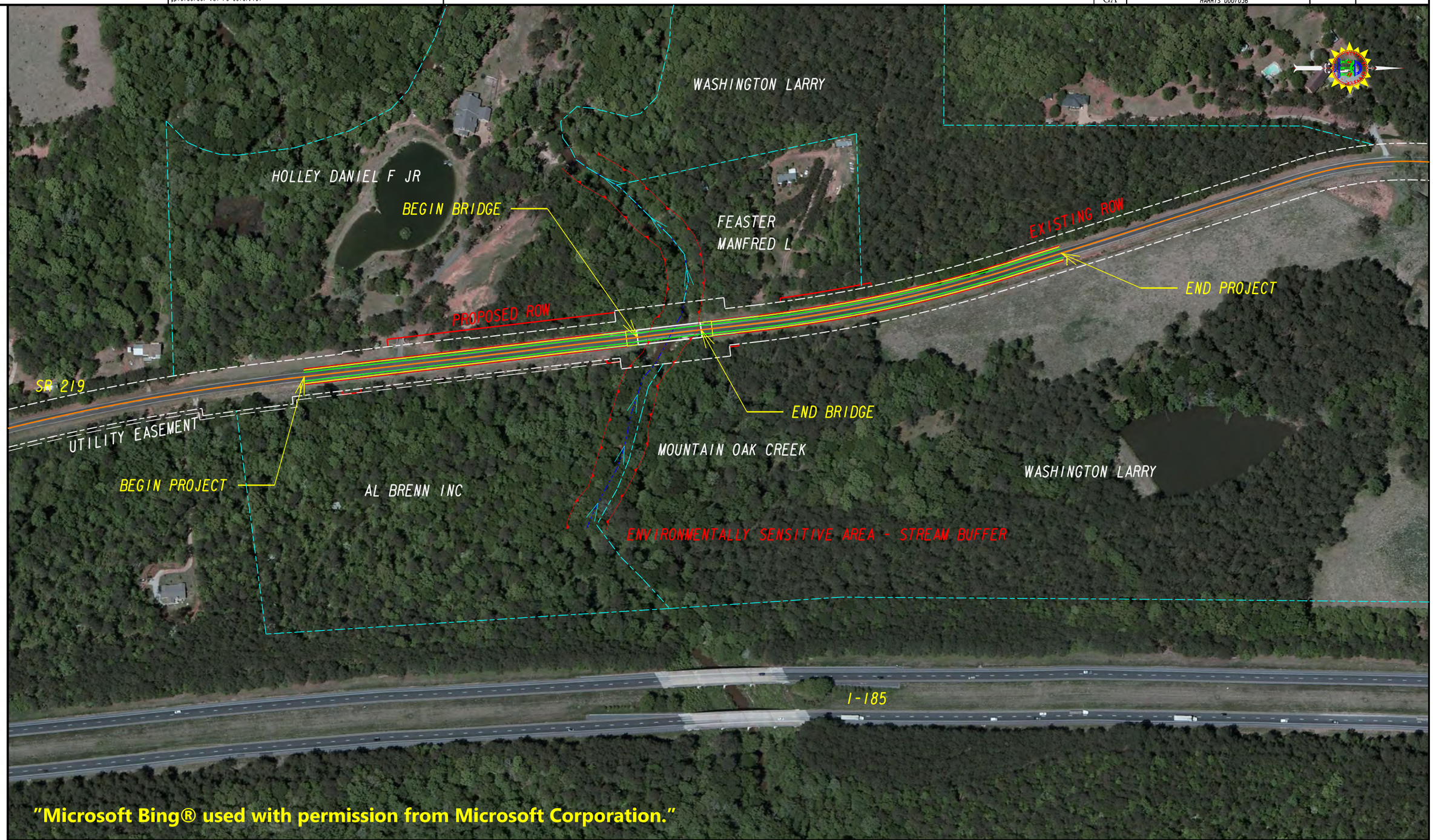

"Microsoft Bing® used with permission from Microsoft Corporation."

GEORGIA
DEPARTMENT
OF
TRANSPORTATION

SCALE IN FEET
0 100 200 400

REVISION DATES		

STATE OF GEORGIA
DEPARTMENT OF TRANSPORTATION

OFFICE: DISTRICT 3 DESIGN

CONCEPT LAYOUT

SR219 AT MOUNTAIN OAK CREEK
BRIDGE REPLACEMENT

DRAWING No.

12/14/2012 GPLN

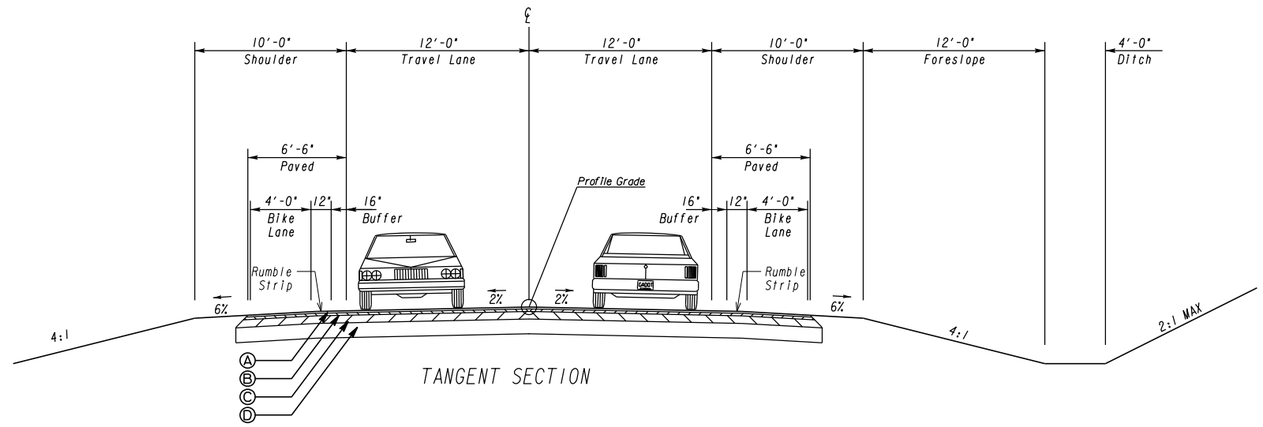

TANGENT SECTION

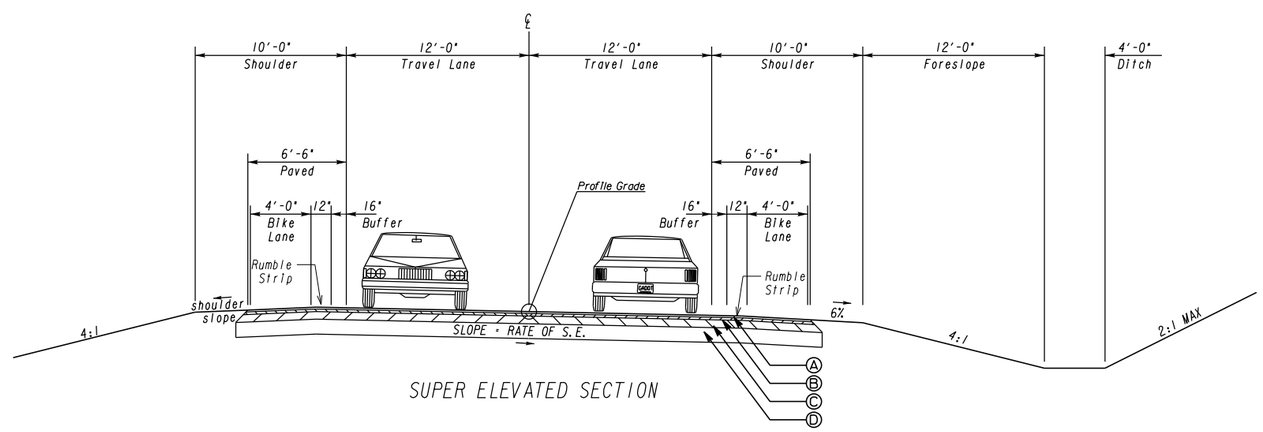

SUPER ELEVATED SECTION

S.E. RATE	shoulder slope
2.0% OR 3.0%	4.0%
4.0% OR 5.0%	2.0%
6.0% OR 7.0%	1.0%
8.0 % +	0.0%

Ⓐ RECYCLED ASPH CONC 9.5 MM SUPERPAVE, TP1, BL 1 INCL BITUM MATL & H LIME (137.5 LB/SY)
Ⓑ RECYCLED ASPH CONC 19 MM SUPERPAVE, GP 1 OR 2, INCL BITUM MATL & H LIME (220 LB/SY)
Ⓒ RECYCLED ASPH CONC 25 MM SUPERPAVE, GP 1/2, INCL BITUM MATL & H LIME (330 LB/SY)
Ⓓ GRADED AGGREGATE BASE CRS, INCL MATL, 6 IN

GEORGIA
DEPARTMENT OF TRANSPORTATION

NOT TO SCALE

REVISION DATES

STATE OF GEORGIA
DEPARTMENT OF TRANSPORTATION
OFFICE: DISTRICT 3 DESIGN

TYPICAL SECTIONS

SR219 AT MOUNTAIN OAK CREEK
BRIDGE REPLACEMENT

DRAWING No. 05-001

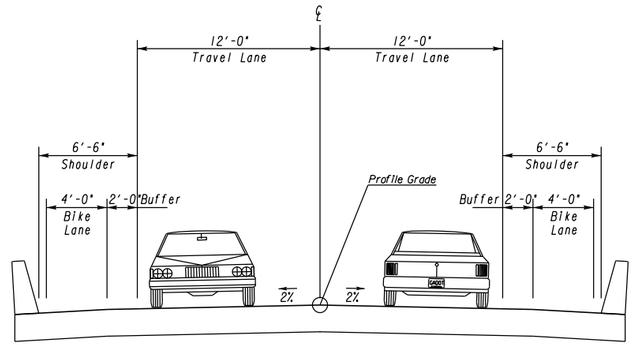

BRIDGE SECTION

GEORGIA
DEPARTMENT
OF
TRANSPORTATION

NOT TO SCALE

REVISION DATES

STATE OF GEORGIA
DEPARTMENT OF TRANSPORTATION

OFFICE: DISTRICT 3 DESIGN

TYPICAL SECTIONS

SR219 AT MOUNTAIN OAK CREEK
BRIDGE REPLACEMENT

DRAWING No.
05-001

DETAILED COST ESTIMATE

Georgia Department of Transportation

Job: 0007036

JOB NUMBER *0007036* **FED/STATE PROJECT NUMBER**

SPEC YEAR: *01*

DESCRIPTION: *SR 219 BRIDGE REPLACEMENT*
CSBRG-007-00(036)

ITEMS FOR JOB 0007036

0010 - ROADWAY

Line Number	ITEM	QUANTITY	UNITS	PRICE	DESCRIPTION	AMOUNT
0005	150-1000	1.000	LS	$75,000.00000	TRAFFIC CONTROL - CSBRG-0007-00(036)	$75,000.00
0010	210-0100	1.000	LS	$750,000.00000	GRADING COMPLETE - CSBRG-0007-00(036)[1]	$750,000.00
0015	310-1101	5162.000	TN	$19.00000	GR AGGR BASE CRS, INCL MATL	$98,078.00
0020	318-3000	1000.000	TN	$20.00000	AGGR SURF CRS	$20,000.00
0025	402-1812	1000.000	TN	$90.00000	RECYL AC LEVELING,INC BM&HL	$90,000.00
0035	402-3101	526.000	TN	$85.00000	REC AC 9.5 MM SP,TPI, BL 1 INCL BM & HL	$44,710.00
0030	402-3121	1262.000	TN	$73.00000	RECYL AC 25MM SP,GP1/2,BM&HL	$92,126.00
0040	402-3190	842.000	TN	$83.00000	RECYL AC 19 MM SP,GP 1 OR 2 ,INC BM&HL	$69,886.00
0045	413-1000	918.000	GL	$3.28100	BITUM TACK COAT	$3,011.96
0050	432-5010	823.000	SY	$15.00000	MILL ASPH CONC PVMT,VARB DEPTH	$12,345.00
0055	433-1000	247.000	SY	$165.00000	REINF CONC APPROACH SLAB	$40,755.00
0060	436-1000	518.000	LF	$9.00000	ASPH CONC CURB - 5 IN	$4,662.00
0065	441-0050	560.000	SY	$44.19830	CONC SLOPE DRAIN	$24,751.05
0070	441-0303	4.000	EA	$1,524.03141	CONC SPILLWAY, TP 3	$6,096.13
0330	456-2015	1.000	GLM	$4,040.32848	INDENT. RUMB. STRIPS - GRND-IN-PL (SKIP)	$4,040.33
0075	500-0100	777.000	SY	$5.00000	GROOVED CONCRETE	$3,885.00
0080	500-3200	48.000	CY	$489.30817	CL B CONC	$23,486.79
0085	550-2180	200.000	LF	$24.82220	SIDE DR PIPE 18",H 1-10	$4,964.44
0090	550-3418	4.000	EA	$408.76605	SAFETY END SECTION 18",SD,4:1	$1,635.06
0095	550-3618	4.000	EA	$442.28063	SAFETY END SECTION 18",SD,6:1	$1,769.12
0100	634-1200	10.000	EA	$115.00000	RIGHT OF WAY MARKERS	$1,150.00
0105	641-1100	84.000	LF	$50.80563	GUARDRAIL, TP T	$4,267.67
0110	641-1200	435.000	LF	$15.36276	GUARDRAIL, TP W	$6,682.80
0115	641-5001	2.000	EA	$644.81883	GUARDRAIL ANCHORAGE, TP 1	$1,289.64
0120	641-5012	2.000	EA	$1,859.69496	GUARDRAIL ANCHORAGE, TP 12	$3,719.39
0295	643-8200	123.000	LF	$2.34461	BARRIER FENCE (ORANGE), 4 FT	$288.39
					SUBTOTAL FOR ROADWAY:	**$1,388,599.77**

[1] Grading Complete is based on earthwork quantities of redesigning road to meet current standards.

CONFIDENTIALITY NOTICE: This document may contain confidential and/or privileged information. Any unauthorized duplication, disclosure, distribution/ retransmission or taking of any action in reliance upon the material in this document is strictly forbidden.

DETAILED COST ESTIMATE

Georgia Department of Transportation

Job: 0007036

0020 - EROSION CONTROL

Line Number	ITEM	QUANTITY	UNITS	PRICE	DESCRIPTION	AMOUNT
0185	163-0232	2.000	AC	$500.00000	TEMPORARY GRASSING	$1,000.00
0190	163-0240	60.000	TN	$200.00000	MULCH	$12,000.00
0195	163-0300	4.000	EA	$1,323.76171	CONSTRUCTION EXIT	$5,295.05
0200	163-0520	400.000	LF	$9.64631	CONSTR AND REMOVE TEMP PIPE SLOPE DRAIN	$3,858.52
0205	163-0527	28.000	EA	$129.80559	CNST/REM RIP RAP CKDM,STN P RIPRAP/SN BG	$3,634.56
0210	163-0528	400.000	LF	$2.93540	CONSTR AND REM FAB CK DAM -TP C SLT FN	$1,174.16
0215	163-0529	500.000	LF	$4.52032	CNST/REM TEMP SED BAR OR BLD STRW CK DM	$2,260.16
0220	163-0539	8.000	EA	$900.00000	CONST AND REM RETROFIT-SL BD DM/W STN FL	$7,200.00
0225	163-0541	4.000	EA	$265.75965	CONSTR & REM ROCK FILTER DAMS	$1,063.04
0230	165-0010	1056.000	LF	$0.85000	MAINT OF TEMP SILT FENCE, TP A	$897.60
0235	165-0030	1056.000	LF	$1.00000	MAINT OF TEMP SILT FENCE, TP C	$1,056.00
0240	165-0041	480.000	LF	$1.15688	MAINT OF CHECK DAMS - ALL TYPES	$555.30
0245	165-0071	250.000	LF	$1.52642	MAINT OF SEDIMENT BARRIER - BALED STRAW	$381.61
0250	165-0096	8.000	EA	$210.00000	MAINT OF RETROFIT-SLOT BD DAM/W ST FLT	$1,680.00
0255	165-0101	4.000	EA	$451.10319	MAINT OF CONST EXIT	$1,804.41
0260	165-0110	4.000	EA	$124.00448	MAINT OF ROCK FILTER DAM	$496.02
0265	167-1000	2.000	EA	$500.00000	WATER QUALITY MONITORING AND SAMPLING	$1,000.00
0270	167-1500	12.000	MO	$583.08600	WATER QUALITY INSPECTIONS	$6,997.03
0275	171-0010	2112.000	LF	$1.20815	TEMPORARY SILT FENCE, TYPE A	$2,551.61
0280	171-0030	2112.000	LF	$3.00000	TEMPORARY SILT FENCE, TYPE C	$6,336.00
0285	603-2024	2500.000	SY	$38.00000	STN DUMPED RIP RAP, TP 1, 24"	$95,000.00
0290	603-7000	2500.000	SY	$3.50000	PLASTIC FILTER FABRIC	$8,750.00
0300	700-6910	3.000	AC	$1,000.00000	PERMANENT GRASSING	$3,000.00
0305	700-7000	9.000	TN	$65.00000	AGRICULTURAL LIME	$585.00
0310	700-8000	3.000	TN	$450.00000	FERTILIZER MIXED GRADE	$1,350.00
0315	700-8100	150.000	LB	$2.28246	FERTILIZER NITROGEN CONTENT	$342.37
0320	716-1000	2000.000	SY	$0.73302	EROSION CONTROL MATS,WATERWAYS	$1,466.04
0325	716-2000	4000.000	SY	$1.24000	EROSION CONTROL MATS, SLOPES	$4,960.00
					SUBTOTAL FOR EROSION CONTROL:	**$176,694.48**

0030 - SIGNING & MARKING

Line Number	ITEM	QUANTITY	UNITS	PRICE	DESCRIPTION	AMOUNT
0140	610-9001	4.000	EA	$224.37784	REM SIGN	$897.51
0145	611-5551	4.000	EA	$426.04436	RESET SIGN	$1,704.18
0150	636-1033	30.000	SF	$22.55388	HWY SIGNS, TP1MAT,REFL SH TP 9	$676.62
0155	636-2070	50.000	LF	$9.75504	GALV STEEL POSTS, TP 7	$487.75
0160	653-1501	3721.000	LF	$0.58969	THERMO SOLID TRAF ST 5 IN, WHI	$2,194.24
0165	653-1502	3721.000	LF	$0.62981	THERMO SOLID TRAF ST, 5 IN YEL	$2,343.52
0170	654-1001	53.000	EA	$5.74570	RAISED PVMT MARKERS TP 1	$304.52
0175	657-1085	470.000	LF	$6.22986	PRF PL SD PVT MKG,8",B/W,TP PB	$2,928.03
0180	657-6085	470.000	LF	$6.84558	PRF PL SD PVMT MKG,8",B/Y,TPPB	$3,217.42
					SUBTOTAL FOR SIGNING & MARKING:	**$14,753.79**

CONFIDENTIALITY NOTICE: This document may contain confidential and/or privileged information. Any unauthorized duplication, disclosure, distribution/ retransmission or taking of any action in reliance upon the material in this document is strictly forbidden.

DETAILED COST ESTIMATE

Georgia Department of Transportation

Job: 0007036

0040 - STRUCTURAL

Line Number	ITEM	QUANTITY	UNITS	PRICE	DESCRIPTION	AMOUNT
0125	211-0300	250.000	CY	$25.15445	BR EXCAV, STREAM CROSSING	$6,288.61
0130	540-1102	1.000	LS	$150,000.00000	REM OF EX BR, BR NO - 1	$150,000.00
0135	543-9000	1.000	LS	$1,250,000.00000	CONSTR OF BRIDGE COMPLETE - 1	$1,250,000.00
					SUBTOTAL FOR STRUCTURAL:	**$1,406,288.61**

TOTALS FOR JOB 0007036

ITEMS COST:	**$2,986,336.65**
COST GROUP COST:	**$0.00**
ESTIMATED COST:	**$2,986,336.65**
CONTINGENCY PERCENT:	**$0.00**
ENGINEERING AND INSPECTION:	**$149,316.83**
ESTIMATED COST WITH CONTINGENCY AND E&I:	**$3,135,653.48**
LIQUID AC COST ADJUSTMENT:	**$66,314.38**
TOTAL COST:	**$3,201,967.86**

Lump Sum of removal and construction of bridge is based on square footage of bridge.

CONFIDENTIALITY NOTICE: This document may contain confidential and/or privileged information. Any unauthorized duplication, disclosure, distribution/ retransmission or taking of any action in reliance upon the material in this document is strictly forbidden.

PROJ. NO.		CALL NO.	9/29/2009
P.I. NO.	0007036		
DATE	7/21/2014		

INDEX (TYPE)	**DATE**	**INDEX**
REG. UNLEADED	Jul-14	$ 3.589
DIESEL		$ 3.867
LIQUID AC		$ 596.00

Link to Fuel and AC Index:
http://www.dot.ga.gov/doingbusiness/Materials/Pages/asphaltcementindex.aspx

LIQUID AC ADJUSTMENTS

PA=[((APM-APL)/APL)]xTMTxAPL

Asphalt

Price Adjustment (PA)			**64904.4**	**$**	**64,904.40**
Monthly Asphalt Cement Price month placed (APM)	Max. Cap	60%	$ 953.60		
Monthly Asphalt Cement Price month project let (APL)			$ 596.00		
Total Monthly Tonnage of asphalt cement (TMT)			181.5		

ASPHALT	**Tons**	**%AC**	**AC ton**
Leveling	1000	5.0%	50
12.5 OGFC		5.0%	0
12.5 mm		5.0%	0
9.5 mm SP	526	5.0%	26.3
25 mm SP	1262	5.0%	63.1
19 mm SP	842	5.0%	42.1
	3630		**181.5**

BITUMINOUS TACK COAT

Price Adjustment (PA)			**$ 1,409.98**	**$**	**1,409.98**
Monthly Asphalt Cement Price month placed (APM)	Max. Cap	60%	$ 953.60		
Monthly Asphalt Cement Price month project let (APL)			$ 596.00		
Total Monthly Tonnage of asphalt cement (TMT)			3.942902646		

Bitum Tack Gals	gals/ton	tons
918	232.8234	3.94290265

BITUMINOUS TACK COAT (surface treatment)

Price Adjustment (PA)			**0**	**$**	**-**
Monthly Asphalt Cement Price month placed (APM)	Max. Cap	60%	$ 953.60		
Monthly Asphalt Cement Price month project let (APL)			$ 596.00		
Total Monthly Tonnage of asphalt cement (TMT)			0		

Bitum Tack	SY	Gals/SY	Gals	gals/ton	tons
Single Surf. Trmt.		0.20	0	232.8234	0
Double Surf.Trmt.		0.44	0	232.8234	0
Triple Surf. Trmt		0.71	0	232.8234	0
					0

TOTAL LIQUID AC ADJUSTMENT	**$**	**66,314.38**

GEORGIA DEPARTMENT OF TRANSPORTATION
PRELIMINARY ROW COST ESTIMATE SUMMARY

Date: 9/18/2014 Project: 0007036
Revised: County: Harris
PI: 0007036

Description: SR 219 At Mountain Oak Creek
Project Termini: Bridge Replacement

Existing ROW: Varies
Parcels: 4 Required ROW: Varies

Land and Improvements		$60,000.00
Proximity Damage	*$0.00*	
Consequential Damage	*$0.00*	
Cost to Cures	*$0.00*	
Trade Fixtures	*$0.00*	
Improvements	*$20,000.00*	
Valuation Services		$15,000.00
Legal Services		$40,200.00
Relocation		$8,000.00
Demolition		$0.00
Administrative		$35,500.00
TOTAL ESTIMATED COSTS		$158,700.00
TOTAL ESTIMATED COSTS (ROUNDED)		***$159,000.00***

Preparation Credits	Hours	Signature

Prepared By: LaShone Alexander CG#: 286999 09/18/2014 (DATE)
Approved By: LaShone Alexander CG#: 286999 09/18/2014 (DATE)

NOTE: No Market Appreciation is included in this Preliminary Cost Estimate

allsop

DEPARTMENT OF TRANSPORTATION
STATE OF GEORGIA

INTERDEPARTMENT CORRESPONDENCE

FILE **CSBRG-0007-00(036), Harris County, P.I. # 0007036**
Bridge replacement on SR 219 @ Mountain Oak Creek

OFFICE Thomaston

DATE November 13, 2014

FROM Kerry Gore, District Utilities Engineer

TO Sue Anne Decker, Project Manager

SUBJECT **PRELIMINARY UTILITY COST (ESTIMATE)**

As requested by your office, we are furnishing you with a Preliminary Utility Cost estimate for each utility with facilities potentially located within the project limits.

FACILITY OWNER	NON-REIMBURSABLE	REIMBURSABLE
Diverse Power	$0	$18,428
Harris County Water Works	$45,000	$0
BellSouth Telecommunications	$0	$0
Charter Communications	$7,649	$0
TOTALS	**$52,649**	**$18,428**

Total Preliminary Utility Cost Estimate **$71,077.00**.

If you have any questions, please contact Gene McKissick at 706-646-7604.

KG/GM

cc: Mike Bolden, State Utilities Engineer *(via: e-mail)*

Department of Transportation
State of Georgia

INTERDEPARTMENT CORRESPONDENCE

FILE CSBRG-0007-00(036), Harris County
P.I. # 0007036

OFFICE Planning

DATE February 14, 2013

FROM Cynthia L. VanDyke, State Transportation Planning Administrator

TO Genetha Rice-Singleton, State Program Delivery Engineer
Attention: Sue Anne Decker, P.E.

SUBJECT **Estimated** Traffic Assignments for SR 219 @ MOUNTAIN OAK CREEK SOUTH OF WHITESVILLE.

We are furnishing estimated traffic assignments for the above project as follows:

	NO BUILD	**BUILD**
	BRIDGE ID 145-0028-0	BRIDGE ID 145-0028-0
2011 ADT	500	500
2021 ADT	700	700
2041 ADT	1200	1200
2011 DHV	40	55
2021 DHV	55	75
2041 DHV	95	125
D	60%	60%
K	8.0%	10.6%
T	5.00%	5.00%
S.U.	3.50%	3.50%
COMB.	1.50%	1.50%
24 HR. T.	6.00%	6.00%
S.U.	4.00%	4.00%
COMB.	2.00%	2.00%

If you have any questions concerning this information please contact Andre Washington at (404) 631-1925.

CLV/AMW

Traffic Projections/Forecasting Summary Sheet

P.I. # 0007036

HARRIS COUNTY

Year Counts Were Taken: 2011

Growth Factors

Build

Growth for Build

Existing Year to Base Year:

Mainline (SR0219) 3.42%

Base Year to Design Year:

Mainline (SR0219) 2.73%

Mainline (SR0219)

K = 10.6%

Mainline (SR0219)

D = 60%

No Build

Growth for No Build

Existing Year to Base Year:

Mainline (SR0219) 3.42%

Base Year to Design Year:

Mainline (SR0219) 2.73%

Mainline (SR0219)

K = 8.0%

Mainline (SR0219)

D = 60%

Assumptions

- Reviewed GDOT AADT Historical Traffic Growth Trends for the past 25 Years, 20 Years, 15 Years, 10 Years, and 5 Years for the following:
    a. 1 Traffic Counter Location within the scope of this project.
- Reviewed Harris County Comprehensive Land Use Plan.
- Reviewed Georgia Residential Population Projections Based on The 2000 Census Count and The 2010 Census Count.

RESEARCHED BY: ANDRE WASHINGTON
DATE: FEBRUARY 2013

Processed Date:3/14/2014

Parameters: Bridge Serial Num

Bridge Inventory Data Listing

Structure ID:145-0028-0 | **Harris** | **SUFF. RATING:** 55.43

Location & Geography

Structure ID:	145-0028-0
200 Brdge Information:	07
*6A Feature Int:	MOUNTAIN OAK CREEK
*6B Critical Bridge:	0
*7A Route No Carried:	SR00219
*7B Facility Carried:	SR 219
9 Location:	1.5 MI S OF WHITESVILLE
2 Dot District:	3
207 Year Photo:	2013
*91 Inspection Frequency:	24 Date: 10/31/2013
92A Fract Crit Insp Freq:	0 Date: 02/01/1901
92B Underwater Insp Freq:	0 Date: 02/01/1901
92C Other Spc. Insp Freq:	0 Date: 02/01/1901
* 4 Place Code:	00000
*5 Inventory Route(O/U):	1
Type:	3
Designation:	1
Number:	00219
Direction:	0
*16 Latitude:	32 - 47.7702 HMMS Prefix:SR
*17 Longtitude:	85 - 01.4718 HMMS Suffix:00
	MP: 14.82
98 Border Bridge:	000 % Shared:00
99 ID Number:	000000000000000
*100 STRAHNET:	0
12 Base Highway Network:	1
13A LRS Inventory Route:	1451021900
13B Sub Inventory Route:	0
*101 Parallel Structure:	N
*102 Direction of Traffic:	2
*264 Road Inventory Mile Post:	014.82
*208 Inspection Area:	08 Initials: JKP
Engineer's Initials:	JTB
* Location ID No:	145-00219D-014.82N

*104 Highway System:	0
*26 Functional Classification:	07
*204 Federal Route Type:	S No: 00744
105 Federal Lands Highway:	0
*110 Truck Route:	0
206 School Bus Route:	1
217 Benchmark Elevation:	0000.00
218 Datum:	0
*19 Bypass Length:	17
*20 Toll:	3
*21 Maintanance:	01
*22 Owner:	01
*31 Design Load:	2
37 Historical Significance:	5
205 Congressional District:	03
27 Year Constructed:	1949
106 Year Reconsrtucted:	0000
33 Bridge Median	0
34 Skew:	30
35 Structure Flared:	0
38 Navigation Control:	0
213 Special Steel Design:	0
267 Type of Paint:	4
*42 Type of Service On:	1
Type of Service Under:	5
214 Movable Bridge:	0
203 Type Bridge:	A - O - N - O
259 Pile Encasement	3
*43 Structure Type Main:	3 02
45 No.Spans Main:	003
44 Structure Type Appr:	1 04
46 No Spans Appr:	0001
226 Bridge Curve Horz	0 Vert: 1.00
111 Pier Protection	0
107 Deck Structure Type:	1
108 Wearing Structure Type:	6
Membrane Type:	0
Deck Protection:	8

Signs & Attachments

225 Expansion Joint Type:	02
242 Deck Drains:	1
243 Parapet Location:	0
Height:	0.00
Width:	0.00
238 Curb Height:	1
Curb Material:	1
239 Handrail	1 1
*240 Median Barrier Rail:	0
241 Bridge Median Height:	0
* Bridge Median Width:	0
230 Guardrail Loc. Dir. Rear:	3
Fwrd:	3
Oppo. Dir. Rear:	0
Oppo. Fwrd:	0
244 Aproach Slab	3
224 Retaining Wall:	0
233Posted Speed Limit:	55
236 Warning Sign:	0.00
234 Delineator:	1.00
235 Hazard Boards:	1
237 Utilities Gas:	00
Water:	00
Electric:	00
Telephone:	00
Sewer:	00
247 Lighting Street:	0
Navigation:	0
Aerial:	0
*248 County Continuity No.:	00

"The Information contained in this File/Report is the property of GDOT and may not be released to any other party without the written consent of the Data Custodian. Please dispose of this information by shredding or other confidential method."

Bridge Inventory Data Listing

Structure ID:145-0028-0

Programming Data

201 Project No:	FAS 47 (2)
202 Plans Available:	4
249 Prop Proj No:	BRG-0007-00(036)
250 Approval Status:	0000
251 PI Number:	0007036
252 Contract Date:	02/01/1901
260 Seismic No:	00000
75 Type Work:	00 0
94 Bridge Imp: Cost:	$684
95 Roadway Imp. Cost:	$68
96 Total Imp Cost:	$1026
76 Imp Length:	000000
97 Imp Year:	2013
114 Furure ADT:	000675 Year:2032

Hydralic Data

215Waterway Data:	
High Water Elev:	0312.0 Year:1900
Flood Elev:	0000.0 Freq:00
Avg Streambed Elev:	0000.0
Drainage Area:	059.5
Area of Opening:	000965
113 Scour Critical	U
216 Water Depth:	0.7 Br.Height:20.6
222 Slope Protection:	6
221Spur Dikes Rear	0 Fwd:0
219 Fender System	0
220 Dolphin:	0
223 Culvert Cover:	000
Type:	0
No. Barrels:	0
Width:	0.00 Height:0.00
Length:	0 Apron:0
*265 U/W Insp. Area	0 Diver:ZZZ
*Location ID No:	145-00219D-014.82N

Measurements:

*29 ADT	000450 Year:2012
109 %Trucks:	0
* 28 Lanes On:	02 Under:00
210 No. Tracks On:	00 Under:00
* 48 Max. Span Length	0050
* 49 Structure Length:	175
51 Br. Rwdy. Width	23.80
52 Deck Width:	29.80
* 47 Tot. Horiz. Cl:	24
50 Curb / Sidewalk Width	2.00 / 2.00
32 Approach Rdwy. Width	026
*229 Shoulder Width:	
Rear Lt:	2.00 Type:2 Rt:1.50
Fwd. Lt:	2.00 Type:2 Rt:1.50
Pavement Width:	
Rear:	22.50 Type: 2
	22.50 Type: 2
Intersaction Rear:	0 Fwd: 0
36Safety Features Br. Rail:	2
Transition:	2
App. G. Rail:	2
App. Rail End:	2
53 Minimum Cl. Over:	99' 99 "
Under: N	00' 00"
*228 Minimum Vertical Cl	
Act. Odm Dir::	99' 99"
Oppo. Dir:	99' 99"
Posted Odm. Dir:	00' 00"
Oppo. Dir:	00' 00"
55 Lateral Undercl. Rt:	N 0.00
56 Lateral Undercl. Lt:	0.00
*10 Max Min Vert Cl:	99' 99" Dir:0
39 Nav Vert Cl:	000 Horiz:0000
116 Nav Vert Cl Closed:	000
245 Deck Thickness Main	6.50
Deck Thick Approach:	6.50
246 Overlay Thickness:	2.00
212 Year Last Painted:	Sup:2011 Sub:0000

65 Inventory Rating Mathod:	2
63 Operating Rating Method:	2
66 Inventory Type:	2 Rating: 19
64 Operating Type:	2 Rating: 34
231Calculated Loads:	
H-Modified:	20 0
HS-Modified:	25 0
Type 3:	25 0
Type 3s2:	39 0
Timber:	35 0
Piggyback:	40 0
261 H Inventory Rating:	15
262 H Operating Rating	27
67 Structural Evaluation:	5
58 Deck Condition:	4
59 Superstructure Condition:	6
* 227 Collision Damage:	0
60A Substructure Condition:	6
60B Scour Condition:	8
60C Underwater Condition	N
71 Waterway Adequacy:	8
61 Channel Protection Cond.:	8
68 Deck Geometry:	4
69 UnderClr. Horz/Vert:	N
72 Appr. Alignment:	7
62 Culvert:	N

Posting Data

70 Bridge Posting Required	5
41 Struct Open, Posted, CL:	A
* 103 Temporary Structure:	0
232 Posted Loads	
H-Modified:	00
HS-Modified:	00
Type 3:	00
Type 3s2:	00
Timber:	00
Piggyback	00
253 Notification Date:	02/01/1901
258 Fed Notify Date:	02/01/1901

"The Information contained in this File/Report is the property of GDOT and may not be released to any other party without the written consent of the Data Custodian. Please dispose of this information by shredding or other confidential method."

PTIP Meeting Minutes
March 4, 2013
CSBRG-0007-00(036), Harris County
PI No. 0007036
SR 219 @ Mountain Oak Creek south of Whitesville

Attendees

- Sue Anne Decker, GDOT Project Manager
- William Boyd, District 3 Design
- Joshua Waddell, District 3 Design
- Bill Rountree, District 3 Preconstruction (via telephone)
- Scott Parker, District 3 Traffic Operations (via telephone)
- Jack Reed, District 3 Planning and Programming (via telephone)
- Dave Peters, GDOT Design Policy and Support
- Glenn Bowman, GDOT Environmental Services
- Andy Casey, GDOT Roadway Design
- Bill DuVall, GDOT Bridge Design
- Lyn Clements, GDOT Bridge Design

Sue Anne opened the meeting by stating the general scope was to replace the bridge and that this project had 2016 PE, 2018 RW and 2020 CST. Bill stated that the newest Preconstruction Status Report showed a 2014 PE, 2016 RW and 2018 CST.

The team looked at images from Google Earth and GeoTRAQS to determine the deficiencies in the bridge and what type of detour to use. According to GeoTRAQS, the bridge has spalls with exposed rebar, flaking corrosion on the bottom of the beams at the bearings, and heavy cracking. The bridge is not posted and there are no attached utilities.

Bill pointed out that the Bridge Data Inventory sheet had a bypass length of 17 miles listed. He also stated that the bridge was constructed in 1949 and the 2007 ADT was 440 VPD. Bill Rountree stated that the traffic data seemed low. Sue Anne replied that she has received update traffic. The 2011 ADT was 500 VPD, and the 2021 ADT was 700 VPD. Bill restated that the traffic numbers seemed low and asked Sue Anne to coordinate with Planning.

An off-site detour was discussed. With I-185 being close to the project and only 5 mile between the exits, the team decided to scope the project using I-185 as an off-site detour.

Lyn added that they could use the I-185 hydraulic survey for this bridge.

District 3 will complete the concept, survey and roadway activities.

Glenn added that the stream is not a FEMA stream.

Action Items

<u>PM</u>

- Meeting Minutes
- Environmental Task Order

<u>Design</u>

- In-house Man hour estimate

Environmental

- Scope of Services for task order
- In-house man hour estimate

Attachments:

0008600 PTIP Package

CC: Project file
Attendees
K. Joe Carpenter, Jr. P.E., Director of Engineering
Genetha Rice-Singleton, State Program Delivery Engineer
Phil Copeland, State Right-of-Way Administrator
Attn: Katrina Anderson
Jason Mobley, District 3 Design Engineer
Jeff Fletcher, Engineering Management / Operations Manager
Ken Thompson, Location Bureau Chief

DEPARTMENT OF TRANSPORTATION
STATE OF GEORGIA

MEETING SUMMARY
DATE: November 13, 2014

LOCATION: District Three Auditorium B

ATTENDEES: See Sign-in Sheet

COPIES: To file and attendees

SUBJECT: **Concept Team Meeting**
CSBRG-0007-00(036), P.I. No. 0007036, Harris County, SR 219 @ Mountain Oak Creek

DISCUSSION:

Sue Anne Decker opened the meeting with a brief description of the project. Introductions followed. She stated that the PTIP team scoped replacing the bridge by using I-285 as an off-site detour.

An overview of alternatives was given by Patrick Weaver. Alternative #1 proposed to use I-185 as an off-site detour while SR 219 was closed and the bridge was replaced. Alternative #2 proposed to use a temporary bridge on-site while the bridge was replaced. Alternative #3 proposed to construct a permanent parallel bridge and remove the existing bridge. Alternatives #2 and #3 add curvature to the existing roadway, increase construction costs, and have additional environmental impacts. For these reasons, Alternative #1 was selected as the preferred alternative.

Sue Anne asked if any changes to the profile were being made. Patrick stated that the profile was being altered so the low point was off the bridge.

Jason Mobley asked for ecology, history, archaeology, and air/noise reports to be included with the concept submission. Charlotte stated the project was clear for history, archaeology, and air/noise and that she would forward the reports. She stated that ecology findings for aquatic species would not be available until May 2015. She stated that HNTB was not under contract to provide the full ecology survey, just the aquatic survey. Sue Anne agreed to contact Doug Chamblin (OES) regarding the ecology survey and the information needed for the concept report.

Michelle Pate asked if rumble strips on the shoulder were needed. She stated that additional width could be required on the bridge. Daniel Pass confirmed that the shoulder widths accommodate rumble strips and no additional width was needed, but they should be called out on the typical section.

Patrick added the width of the shoulder was set to accommodate bicyclists. SR 219 is a designated bike route.

Ken Robinson raised concern about aquatic species in the stream and how they could affect the constructability of the bridge. He stated a temporary work bridge may be needed to remove the existing bents. Sue Anne assured Ken that a constructability review would be held after the aquatic species survey was completed.

Jim Hoskins commented that the utility easement should be labeled on the concept layout.

Charlotte said the aquatic survey season would begin in the spring. She also questioned why the CE approval was 2 years away and stated environmental could have the ecology study completed by next fall. Sue Anne agreed the schedule was very conservative and said she would look into having it changed.

Jason asked about the PIOH. Sue Anne pointed out the PIOH is 3 years prior to construction. Dan Pass asked questioned the purpose of the PIOH. A few attendees responded the PIOH is for the off-site detour. Sue Anne suggested changing the PIOH date to match environmental timetable.

Bill DuVall requested that roadway design provide the bridge office with the materials needed to begin their hydraulic study. Bill inquired how soon roadway design could provide the plans. Jason responded the plans can be submitted by the end of January, but he would like to have the baseline schedule revised to reflect this change.

Gene McKissick gave the utilities located at this location: Bellsouth (telecommunication), Diverse Power (Electricity), and Harris County Water Works (Water). Bellsouth has a copper line on the west side and a fiber line on the east side. He and Bill both stated that no utilities are attached to the bridge.

Michelle, after the meeting concluded, pointed out that the bridge description in the concept report should say 6.5'shoulder, to account for rumble strips.

Transcribed by: District Three Design
Reviewed By: Sue Anne Decker, Project Manager

Design Notebook Copy ❑ Project File Copy ❑

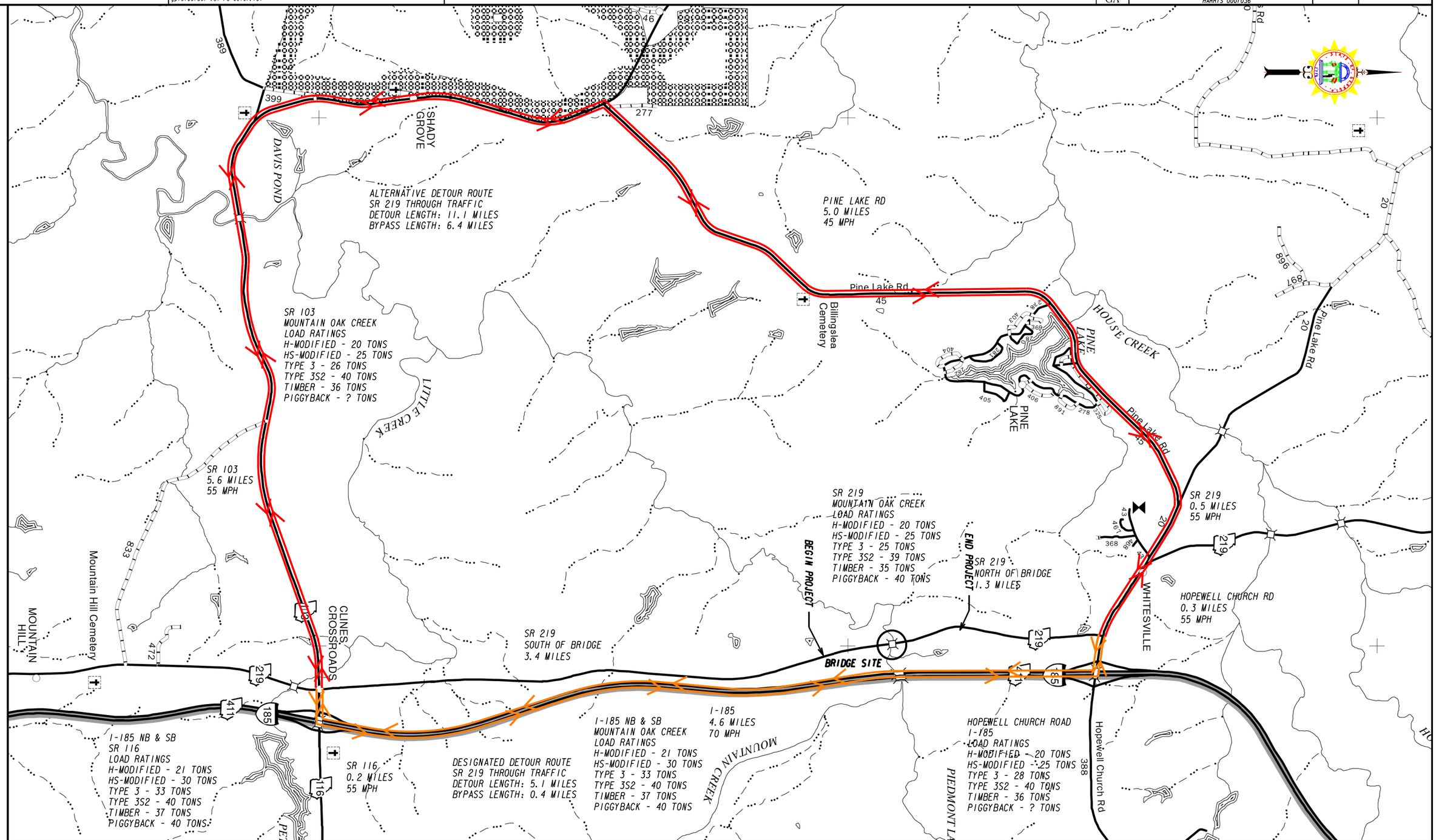

DESIGNATED DETOUR ROUTE
ALTERNATIVE DETOUR ROUTE

GEORGIA
DEPARTMENT OF TRANSPORTATION

NOT TO SCALE

REVISION DATES		

STATE OF GEORGIA
DEPARTMENT OF TRANSPORTATION

OFFICE: DISTRICT 3 DESIGN

DETOUR PLAN

SR219 AT MOUNTAIN OAK CREEK
BRIDGE REPLACEMENT

DRAWING No.