Georgia Department of Transportation

Value Engineering Study Report

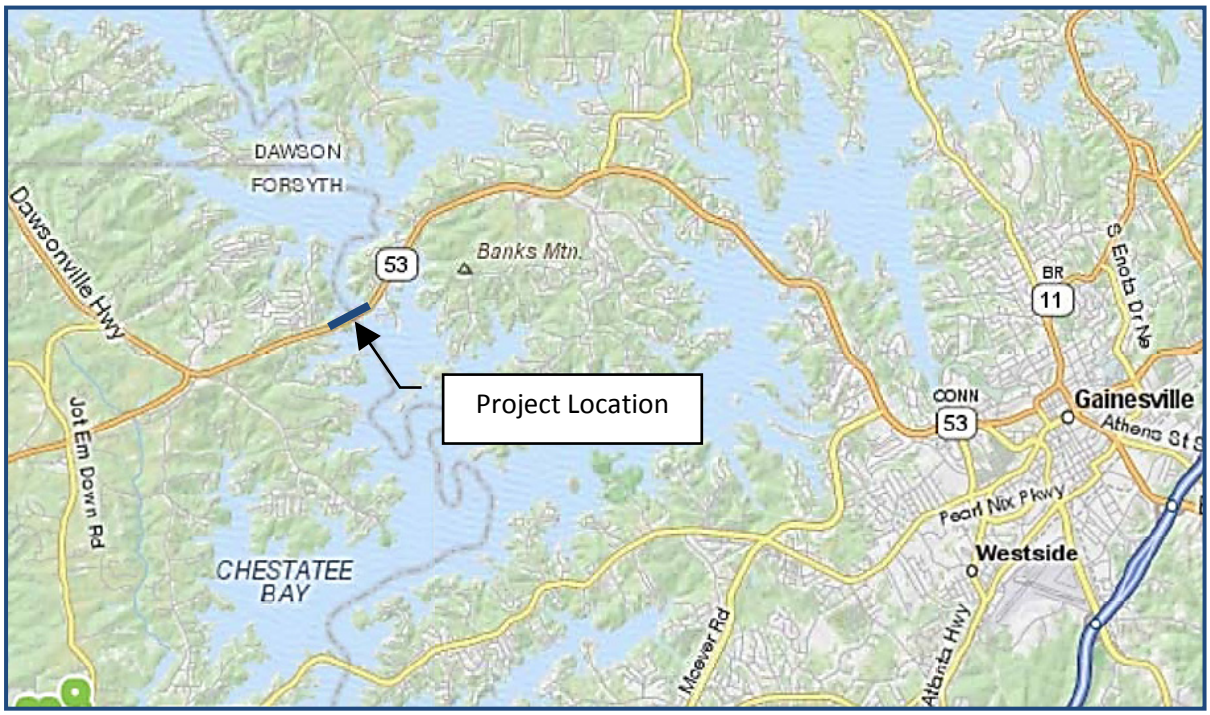

SR 53 Over Chestatee River (Lake Lanier) Bridge Replacement Forsyth and Hall Counties

CSBRG-007-00(021), PI No. 0007021

December 2011

Prepared by

Value Management Strategies, Inc.

VMS
Value Management Strategies, Inc.

"Value Leadership"

CORPORATE OFFICE:
613 W Valley Parkway
Suite 240
Escondido, CA 92025-2504
T: 760 741 5518
F: 760 741 5617

1724 SW Clay Street
Portland, OR 97201-2529
T: 503 957 9642
F: 760 741 5617

1874 Deer Park Circle S
Grand Junction, CO 81507-9578
T: 970 242 5531
F: 760 741 5617

3909 208th Pl SE
Bothell, WA 98021-6948
T: 206 679 8029
F: 760 741 5617

558 SW 333rd Court
Federal Way, WA 98023
T: 253 229 7703
F: 760 741 5617

9022 West 65th Drive
Merriam, KS 66202-3602
T: 816 206 0067
F: 760 741 5617

2020 X Street, Unit A
Sacramento, CA 95818-2461
T: 916 224 9812
F: 760 741 5617

8532 Woodbriar Drive
Sarasota, FL 34238-5666
T: 941 323 5438
F: 760 741 5617

2670 Ravenoaks Place NE
Marietta, GA 30062-5630
T: 678 488 4287
F: 760 741 5617

321 Riverview Drive W
Great Falls, MT 59404-1335
T: 406 952 4473
F: 760 741 5617

Date: December 20, 2011

To: Matthew J. Sanders, AVS
Georgia Department of Transportation
Engineering Services
600 Peachtree Street, NW, 5th Floor
Atlanta, Georgia 30308-3603

Subject: Final Value Engineering Study Report
SR 53 Over Chestatee River (Lake Lanier) Bridge Replacement
Forsyth and Hall Counties CSBRG-007-00(021), PI No. 0007021

Dear Mr. Sanders:

Value Management Strategies, Inc. is pleased to transmit this Final VE Study Report for the referenced project. This report summarizes the events of the study conducted December 5 to 8, 2011.

It was a pleasure working with GDOT on this project, and I look forward to the next collaboration. If you have any questions or comments concerning this final report, please do not hesitate to contact me at 253-229-7703 or email dave@vms-inc.com.

Sincerely,

VALUE MANAGEMENT STRATEGIES, INC.

David Hamilton, CVS, CCE, LEED AP
VE Study Team Leader

Copy: (2 copies/CD PDF) Addressee

TABLE OF CONTENTS

FINAL

EXECUTIVE SUMMARY 1
Project Summary
Project Purpose and Need
VE Study Timing
VE Study Objectives
Key Project Issues
Evaluation of Baseline Concept
- Performance Attributes

VE Alternatives
VE Study Results
VE Team

VE ALTERNATIVES 8
VE Alternative Summary Tables
VE Alternative Documentation

PROJECT INFORMATION.....72
Background
Project Description
Information Provided to the VE Team
Project Drawings
Project Cost Estimate

PROJECT ANALYSIS.....82
Summary of Analysis
Key Project Factors
- Project Issues
- Site Observations

Cost Model
Function Analysis
- Random Function Determination
- FAST Diagram

PROJECT ANALYSIS (continued)
Value Methodology
- Define Performance Attributes
- Prioritize Performance Attributes
- Assess Performance of Baseline Concept

IDEA EVALUATION.....90
Performance Attributes
Evaluation Process
Idea Summary
Idea Summary List
Detailed Idea Evaluation Summary

VALUE ENGINEERING PROCESS.....100
Pre-Study Preparation
VE Study
Post-Study Procedures
VE Workshop Agenda
Meeting Attendees

EXECUTIVE SUMMARY

FINAL

A value engineering study, sponsored by GDOT and facilitated by Value Management Strategies, Inc., was conducted for State Route (SR) 53 Over Chestatee River Bridge Replacement, CSBRG-007-00(021), PI No. 0007021 in Atlanta, Georgia. The study was conducted December 5 – 8, 2011. This *Executive Summary* provides an overview of the project, key findings, and the alternatives developed by the VE team.

PROJECT SUMMARY

The existing Bolling Bridge was constructed in 1956 and is a single structure (ID# 117-0010-0), steel truss bridge that carries two 12-foot travel lanes of SR 53 over the Chestatee River/Lake Lanier. The bridge is located approximately 7.3 miles west of the City of Gainesville and is located in both Forsyth and Hall Counties. The project area is characterized by U.S. Army Corps of Engineers (USACE) land on each side of the crossing and nearby residential development. The Chestatee River/Lake Lanier is considered a navigable waterway by the USACE.

The existing bridge is approximately 844 feet long and 30 feet wide (total deck width), with 1-foot outside shoulders and no median. The width of the existing right of way is 200 feet. The Bolling Bridge is a fracture critical structure that has been struck numerous times due to its low overhead clearance (minimum clearance of 15 feet). Due to its lack of structural integrity, replacement of this structure is recommended.

The project represents the construction of a new two-lane bridge over Chestatee River/Lake Lanier. The project will replace the existing steel truss bridge that currently exists at this location, which is considered structurally deficient. The project will begin at a point approximately 0.39 miles southwest of the Chestatee River and extend to a point approximately 0.35 miles northeast of the Chestatee River. The project length is approximately 0.74 miles. An additional 70 feet of right of way on the north side of the alignment is needed for this project. The proposed bridge will consist of two 12-foot lanes with 8-foot shoulders and no median. The roadway approaches will be reconstructed to provide two 12-foot lanes and 10-foot shoulders. The shoulder will include a 2-foot paved shoulder.

The centerline of the replacement structure would be located approximately 68 feet north of the centerline of the existing bridge. The footprint of the replacement structure is proposed to be relocated to the north in order to maintain traffic during the construction phase, as there are no reasonable detours available to accommodate motorists traveling on SR 53 during the construction period. The replacement bridge would be approximately 850 feet long and 43.25 feet wide (total deck width). The new structure will have a minimum vertical clearance of 17 feet above normal pool elevation and a maximum horizontal clearance of approximately 250 feet measured from the either side of the central pier to each of the outside piers. Design Year (2037) average daily traffic (ADT) is estimated at 18,000 vehicles per day (vpd). Total project costs for all elements of the project are currently estimated at $13,655,902.

PROJECT PURPOSE AND NEED

The SR 53 Over Chestatee River project is needed to improve the Bridge Sufficiency Rating of Structure ID# 117-0010-0 which is currently 39.45. The purpose of the project is to replace the existing insufficient Bolling Bridge over the Chestatee River/Lake Lanier with a new structure, just north of the existing bridge location and to reduce future bridge maintenance costs.

VE STUDY TIMING

The VE study was conducted following submittal of the Concept Report which was completed in November 2011. The project is scheduled for Ready to List (RTL) in May 2014.

VE STUDY OBJECTIVES

The objectives of the VE study were to optimize the project design and to present alternatives which improve project procurement, reduce future maintenance costs, control risk, and maximize competition for the proposed construction contract.

KEY PROJECT ISSUES

The items listed below are the key drivers, constraints, or issues being addressed by the project and considered during this VE study to identify possible improvements.

- Approximately 1.5 acres of impact to Lake Lanier.
- Park Impacts – Adverse impacts to the NRHP-eligible bridge, especially the west end of the bridge (recreational property).
- There can be no net volume change of water storage below Elevation 1,085. Any construction items introduced below this elevation must be mitigated for the equal volume replacement at the appropriate flood level.
- The existing bridge will require a permit prior to demolition. Blasting and dropping the bridge into the lake will not be allowed due to lead paint coatings on the bridge.

EVALUATION OF BASELINE CONCEPT

Performance Attributes
Maintainability
Mainline Operations
Environmental Impacts
Construction Impacts

During the course of the VE study, a number of analytical tools and techniques were applied to develop a better understanding of the baseline concept and to focus on areas of possible value improvement. A major component of this analysis was Value Metrics which seeks to assess the elements of cost, performance, time, and risk as they relate to project value. These elements required a deeper level of analysis, the results of which are detailed in the *Project Analysis* section of this report. The key performance attributes identified for the project are listed in the table, "Performance Attributes."

Below is a summary of the major observations and conclusions identified during the evaluation of the baseline concept which led the VE team to develop the alternatives and recommendations presented in this report.

Maintainability

The concrete design will result in a very durable facility with low maintenance requirements in the future. Based upon the current cost comparison of steel and concrete, the baseline concrete design results in a more economical structure than steel, with low life cycle cost.

Mainline Operations

The bridge purpose and need is for a two-lane facility which meets the criteria and design year ADT. The design appears to meet this requirement. Future capacity beyond the 18,000 vph would likely require a four-lane facility, but funding is typically not provided for facilities beyond the planning period. The roadway alignment needs to at least consider how SR 53 would be four-laned in the future and how this would be constructed.

Environmental Impacts

The design team has done a good job of reviewing the environmental issues with the Corps of Engineers (COE) and assessing the mitigation risks. Some opportunity exists though to control these risks and reduce the possibility of scope creep for this portion of the work. It is anticipated that the cost for mitigation measures may increase two or three fold as issues are defined and agreeable solutions are negotiated with the COE.

Construction Impacts

The project appears quite constructible although the continuous Bulb-T will require a contractor with some skill in post-tensioned members and have the provisions to ship the girders into the Atlanta area from Florida. Shifting the alignment to the north is an added cost, but detours have been eliminated from consideration due to the 22-mile travel distance. Construction access may require mobilization of several barges to construct the new bridge and for the demolition of the existing structure.

VE ALTERNATIVES

The VE team developed 12 alternatives and one design suggestion for improvement of the project. The following are the alternatives identified, along with their associated potential initial cost savings, potential change in schedule, and a brief discussion of each. Please note that because the cost data depicted on the following pages represent *savings*, a number in parentheses represents a cost *increase*.

Alternative No. and Description	Initial Cost Savings	LCC Savings	Change in Schedule
A-1.0 Shift the centerline of the alignment south by 24 feet, closer to the existing bridge	**$853,000**	**--**	**No change**
The project as currently planned will include the purchase of an additional 50 feet of right of way to allow construction of the new alignment and bridge structure. It appears that the new alignment can be moved south, saving in right of way, embankment, and environmental impacts.			
A-2.0 Shorten the eastern termination point, end at STA 48+00 in lieu of STA 50+00	**$56,000**	**--**	**No change**
The eastern termination point appears to extend approximately 200 feet beyond the point where the new alignment meets the existing roadway. The added length repaves a section of the existing roadway, but expands the environmental footprint of the project.			
B-7.0 Reduce the number of beams in Alternate B from 5 to 4	**$254,000**	**--**	**No change**
Movement and placement of the bridge girders is a major cost of construction and efforts should be made to optimize the design and reduce the handling efforts required to construct the new bridge. Using fewer beams with slightly wider spacing appears to be a reasonable approach.			
B-9.0 Eliminate the bridge deck overhang on Alternate B	**$91,000**	**--**	**Saves 0.25 month**
This alternative would eliminate forming on the outer edges of the underside of the bridge deck and simplify the contractor's work on the structure. The beam spacing would be increased slightly to adjust for this change.			
B-10.0 Increase the deck concrete strength from 3,500psi to 4,500psi	**$34,000**	**--**	**No Change**
Using higher strength concrete allows the deck to be slightly thinner and may improve the long term durability of the material. This also reduces the dead load of the structure, potentially saving on the cost of the substructure.			
B-13.0 Shorten the drilled caissons by 20 to 25 feet		**Design Suggestion**	
Pending further geotechnical analysis, it is suggested that foundation options include both drilled caissons imbedded in hard rock, spread footings on weathered rock, and shorter drilled caissons on the upper weathered rock layer.			
CM-2.0 Allow a base bid bridge design (Alternate B) with allowable design bid options by the contractor	**$245,000**	**--**	**No change**
Allow the contractors to submit bid alternatives of their own choosing to optimize the structure foundation.			

CM-2.1 Develop a base bid bridge design (Alternate B) with 2 - 3 specific foundation bid options	**$98,000**	**--**	**No change**

This alternative would include two or three design alternatives for the foundation and allow the contractor to submit bids on the base bid (superstructure) plus each of the foundation options. The lowest combination of the base bid plus the foundation option would be awarded the contract.

P-4.0 Lower the profile on the eastern end of the alignment from STA 32+26.76 to STA 48+30	**$122,000**	**--**	**No change**

Lowering the profile on the eastern end of the alignment would reduce the height of the MSE walls, reduce embankment quantities, and minimize environmental impacts.

W-1.0 Lengthen the bridge by 622 feet and replace MSE walls/embankment with structure	**($876,000)**	**--**	**No change**

There appears to be some potential for scope creep and risk associated with the environmental mitigation on the project and the extent of the MSE walls. If these items continue to grow, there will be a breakeven point where it becomes more cost effective to use structure in lieu of the embankment concept with MSE walls. There are three alternatives which address this issue and present the cost to convert different length of the project to structure. Although all three of these alternatives appear to add significant cost to the project, they represent methods to reduce the known project risk elements and potential for scope creep. As these risks become more defined, and costs updated on the MSE walls, the breakeven point for embankment vs structure will become clear.

W-1.1 Lengthen the bridge by 522 feet and replace MSE walls/embankment with structure	**($665,000)**	**--**	**No change**

Converting 522 feet of alignment to structure would increase the project cost, but would significantly reduce the environmental impact to the project.

W-1.2 Length the bridge by 147 feet and replace MSE walls/embankment with structure	**($273,000)**	**--**	**No change**

There appears to be enough potential risk associated with the environmental mitigation and MSE wall quantities to justify converting 147 feet of additional alignment from embankment/MSE walls to structure.

W-2.0 Use more sloped fill (2:1) in lieu of MSE walls	**$586,000**	**--**	**No change**

The cost for the MSE walls is expected to increase as quantities are examined and the cost of cofferdams included for locations where the wall is within the lake. Although using sloped fill increases the environmental footprint, it may have some benefits from a cost perspective.

VE STUDY RESULTS

The results of the VE study focused upon the potential risk associated with the environmental mitigation for the project and optimizing the combination of embankment, structure, and permitting requirements. The design analysis presented in the Concept Report and Structure Type Study separated these elements into distinct components without considering the overall combined impact. Breakeven points for embankment with MSE walls should be compared against using structure for the new alignment and incorporate the differences in environmental impacts of the various combinations of solutions. Small changes in profile for example will impact the embankment and wall quantities as well as the environmental footprint, lake storage limitations, and cost of mitigation measures. A holistic approach is suggested where these elements are considered and balances against the performance benefits to meet the project purpose and need.

The key findings of the VE study include identification of several significant risks, and cost escalation anticipated on the MSE walls and environmental mitigation for the project. These risks can be contained and reduced by reevaluating the MSE wall quantities, including adequate bury depth on the walls, and finalizing mitigation requirements with the COE. Several of these risks elements can be contained by converting more of the alignment from embankment to structure. It is anticipated that the COE would be in favor of measures which would minimize embankment, reduce excavation work and cofferdam construction in the water, and reduce the project's environmental footprint. Converting more of the alignment to structure accomplishes these goals, but further investigation is needed to quantify the cost impacts and identify the breakeven point between embankment and structure.

Please refer to the *Project Analysis* section of this report for additional details on this analysis.

VE TEAM

VE Study Team

Name	Organization	Title
Dave Hamilton	Value Management Strategies, Inc.	VE Team Leader/Civil
Dominic Saulino	HNTB	Constructibility/CM
Jim Aitken	HNTB	Structural
Lenor Bromberg	Kennedy Engineering	Roadway/Environmental

Key Project Contacts

Name	Organization	Title
Matt Sanders	GDOT - Engineering Services	Value Engineering Specialist
Lisa Myers	GDOT - Engineering Services	Assistant State Project Review Engineer – VE Coordinator
Al Bowman	The LPA Group	Design Project Manager
Otis Clark	GDOT - Program Delivery	Project Manager
Ken Werho	GDOT	Traffic Operations
Bill DuVall	GDOT	Bridge Design
Melissa Harper	GDOT - Construction	Construction
Brad Gowen	The LPA Group	Design Team
Bobby Dollar	GDOT	Environmental Services
Ron Wishon	GDOT	Engineering Services

The results of this study are presented as individual alternatives to the baseline concept. Each alternative consists of a summary of the baseline concept, a description of the suggested change, a listing of its advantages and disadvantages, a cost comparison, discussion of schedule and risk impacts (if applicable), and a brief narrative comparing the baseline design with the alternative. Sketches and calculations are also presented where applicable.

The cost comparisons reflect a comparable level of detail as in the baseline estimate. A life-cycle benefit-cost analysis for major alternatives is included where appropriate.

VE studies result in the development of a number of alternatives. While it is possible for all alternatives to be implemented, typically there are combinations of some alternatives that may provide the best solution for the project, while other VE alternatives may be mutually exclusive and each represent different solutions for the same design task. This is due to the fact that some alternatives may be competing ideas or different ways to address the same function. Some alternatives are developed to answer a question raised by a decision maker or to resolve an open issue and found not to be beneficial to the ultimate project.

As a result of these factors, the VE team develops the VE alternatives with sequential numbers, CM-2.0, CM-2.1, etc. which represent possible solutions for the same issue. Decision makers will need to evaluate these options to choose the solution which in their opinion best optimizes the project goals.

VE ALTERNATIVE SUMMARY TABLES

Summary of VE Alternatives

Alternative No. & Description	Initial Cost Savings	LCC Savings	Change in Schedule
A-1.0 Shift the centerline of the alignment south by 24 feet, closer to the existing bridge	$853,000	--	No change
A-2.0 Shorten the eastern termination point, end at STA 48+00 in lieu of STA 50+00	$56,000	--	No change
B-7.0 Reduce the number of beams in Alternate B from 5 to 4	$254,000	--	No change
B-9.0 Eliminate the bridge deck overhangs on Alternate B	$91,000	--	Saves 0.25 month
B-10.0 Increase the deck concrete strength from 3,500psi to 4,500psi	$34,000	--	No change
B-13.0 Shorten the drilled caissons by 20 to 25 feet	Design Suggestion		

Alternative No. & Description	Initial Cost Savings	LCC Savings	Change in Schedule
CM-2.0 Allow a base bid bridge design (Alternative B) with allowable design bid options by the contractor	$245,000	--	No change
CM-2.1 Develop a base bid bridge design (Alternate B) with 2 to 3 specific foundation bid options	$98,000	--	No change
P-4.0 Lower the profile on the eastern end of the alignment from STA 32+26.76 to STA 48+30	$122,000	--	No change
W-1.0 Lengthen the bridge by 622 feet and replace MSE walls/embankment with structure	($876,000)	--	No change
W-1.1 Lengthen the bridge by 522 feet and replace MSE walls/embankment with structure	($665,000)	--	No change
W-1.2 Length the bridge by 147 feet and replace MSE walls/embankment with structure	($273,000)	--	No change
W-2.0 Use more sloped fill (2:1) in lieu of MSE walls	$586,000	--	No change

Note: Because the cost data depicted above represent savings*, a number in parentheses represents a cost* increase*.*

VE ALTERNATIVE A-1.0

Shift the centerline of the alignment south by 24 feet closer to the existing bridge

Initial Cost Savings: $853,000
LCC Savings: $0
Change in Schedule: No Change

Description of Baseline Concept: The proposed alignment is located 68 feet north of and parallel to the existing bridge, tying into the existing road on either end using 1600-foot horizontal curves. The total length of the project is approximately 3,900 feet.

Description of Alternative Concept: This alternative proposes to move the edge of the proposed alignment pavement to within 20-feet of the edge of pavement of the existing roadway. Maintaining 20-foot spacing between the existing and proposed alignments will allow ample room for removal of the existing bridge and construction of the proposed bridge.

Advantages:

- Reduces the Required Right-of-Way
- Reduces the amount of borrow needed
- Reduces the amount of excavation needed to maintain existing lake capacity
- Reduces environmental impacts
- Reduces length of total project
- Reduces the height of the proposed MSE walls

Disadvantages:

- The alignment will need to be slightly modified

Discussion: This alternative will provide considerable cost savings, in addition to reducing the amount of fill within the normal and flood pool elevations. This will require less excavation to maintain the existing capacity within the lake. The Required Right-of-Way will be reduced and the length of the project will be reduced. The difference in elevation between the existing and proposed roadways will be accommodated during construction. Should the project be widened to four lanes at some point in the future, the additional lanes and bridge can be built on the same location as the existing roadway.

No impacts to the project schedule are anticipated as a result of this alternative. A revised Concept Report would need to be completed but this would not have any effect on schedule.

VE ALTERNATIVE A-1.0

Shift the centerline of the alignment south by 24 feet closer to the existing bridge

Baseline Concept Sketches

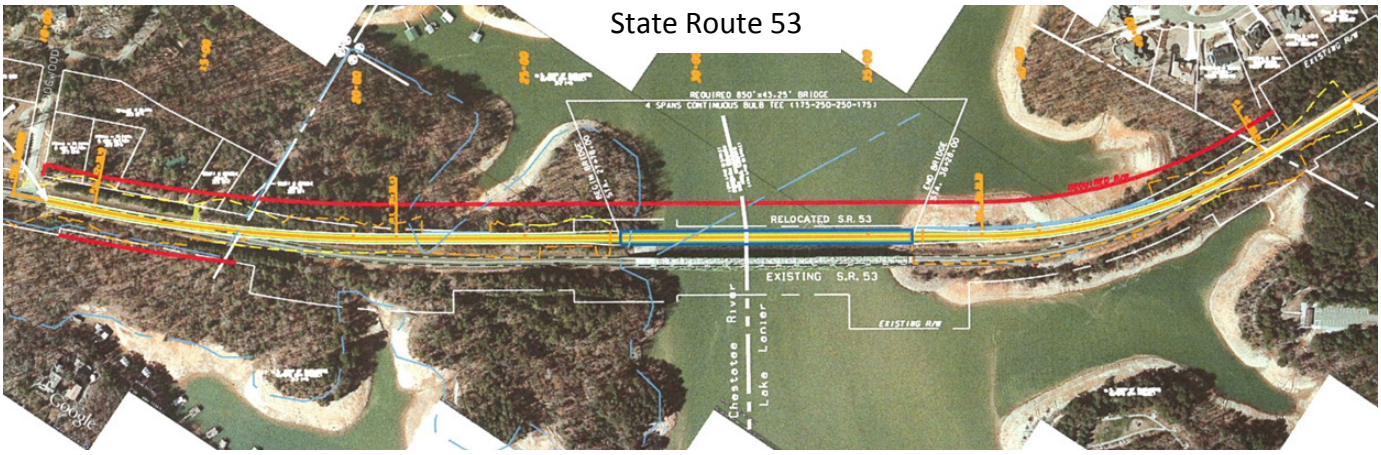

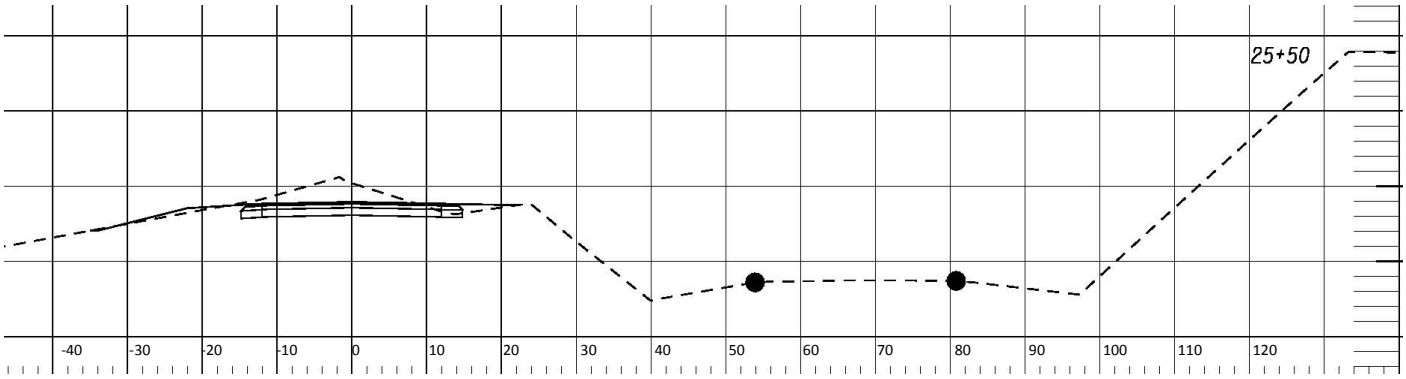

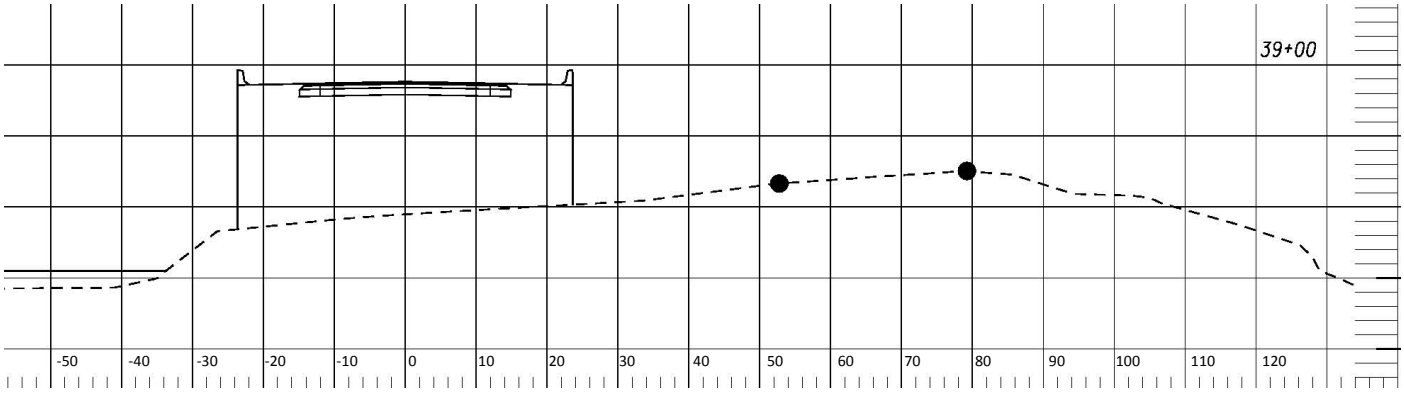

VE ALTERNATIVE A-1.0

Shift the centerline of the alignment south by 24 feet closer to the existing bridge

Alternative Concept Sketches

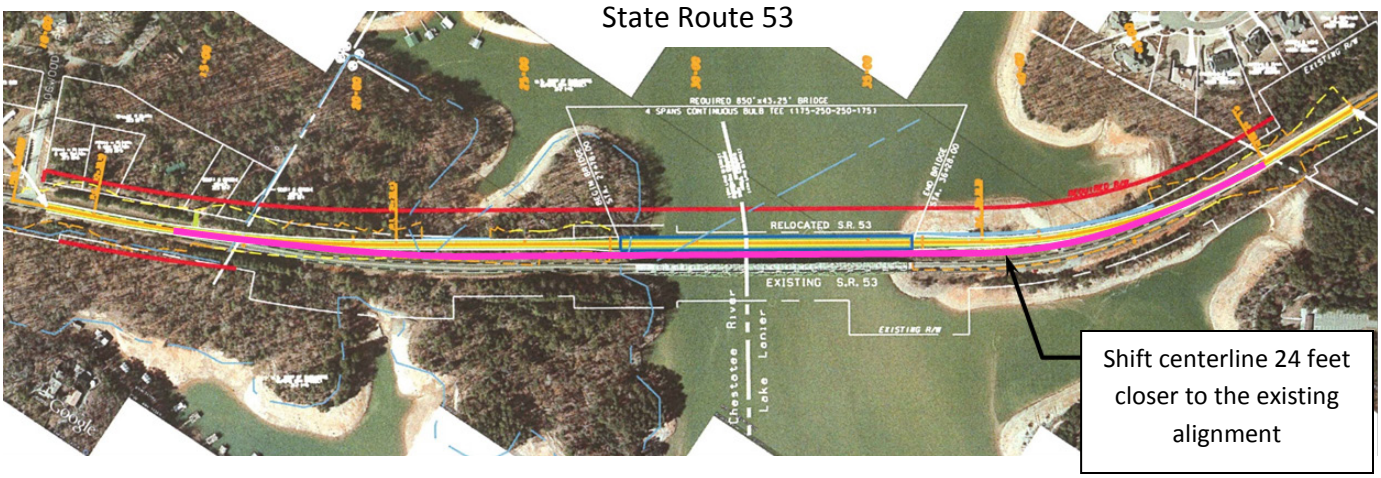

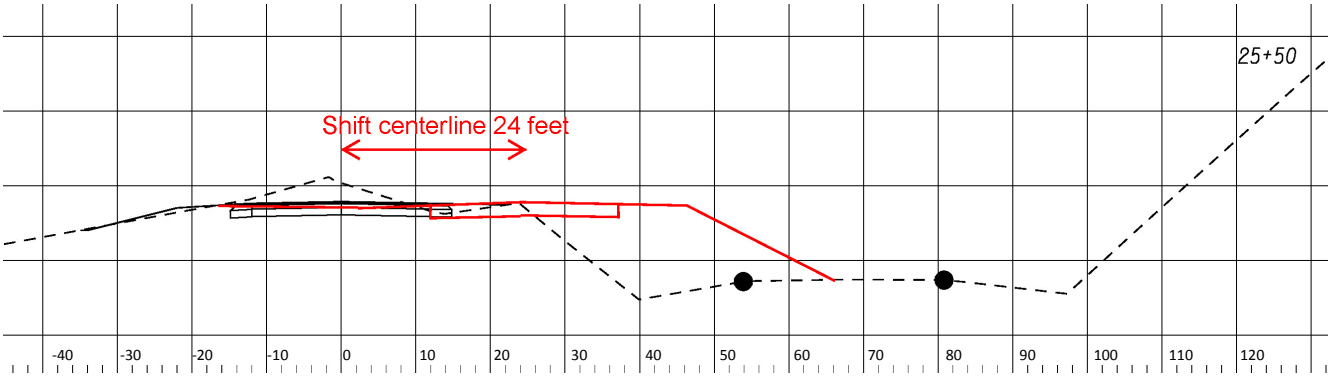

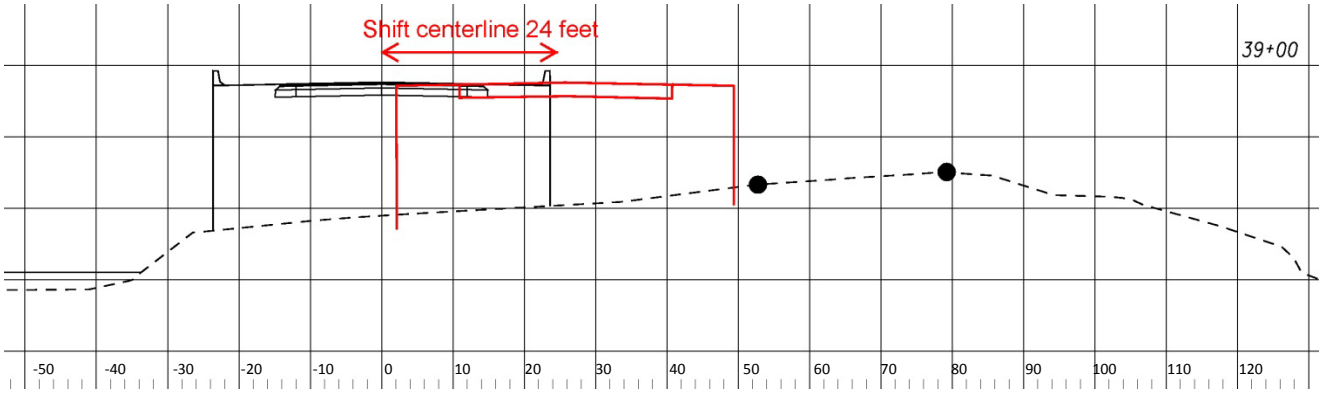

VE ALTERNATIVE A-1.0

Shift the centerline of the alignment south by 24 feet closer to the existing bridge

Assumptions and Calculations:

Total SY of pavement = 3,050LFx28ft/9ft/SY = 9,489SY
Cost / SY = $66.70/SY

Initial Cost Estimate

CONSTRUCTION ELEMENT		*BASELINE CONCEPT*			*ALTERNATIVE CONCEPT*		
Description	**Unit**	**Qty**	**Cost/Unit**	**Total**	**Qty**	**Cost/Unit**	**Total**
Pavement	SY	9,489	$ 66.70	$ 632,916	7,467	$ 67	$ 498,049
Pavement Markings	LF	2,600	$ 3	$ 8,008	0	$ -	$ -
MSE Walls	SF	5,170	$ 50	$ 258,500	0	$ -	$ -
Drainage (2.5% of Total Cost)	LS	1	$ 22,489	$ 22,489	0	$ -	$ -
Erosion Control (6% of Total Cost(	LS	1	$ 53,965	$ 53,965	0	$ -	$ -
Earthwork (15% of Total Cost)	LS	1	$ 134,914	$ 134,914	0	$ -	$ -
Guardrail (0.5% of Total Cost)	LS	1	$ 4,497	$ 4,497	0	$ -	$ -
ROW*	LS	1	$ 1,571,250	$ 1,571,250	1	$ 1,335,562	$ 1,335,562
				$ -			$ -
				$ -			$ -
* Assume ROW reduction of 15%				$ -			$ -
				$ -			$ -
				$ -			$ -
SUB-TOTAL				$2,686,539			$1,833,611
PROJECT MARK-UPS				$0			$0
TOTAL (Rounded)				$2,687,000			$1,834,000
						SAVINGS	**$853,000**

VE ALTERNATIVE A-2.0

Shorten the eastern termination point, end at STA 48+00 in lieu of STA 50+00

Initial Cost Savings: $56,000
LCC Savings: $0
Change in Schedule: No Change

Description of Baseline Concept: The proposed alignment ends at STA 50+00 along the crest vertical curve. The existing and proposed profiles from STA 48+00 are within approximately 1-inch of each other.

Description of Alternative Concept: This alternative would end the project at STA 48+00 rather than STA 50+00 as shown on the concept plan. The existing and proposed profiles are essentially the same and the horizontal location of the proposed and existing roadways are the same; also the section is in a normal crown. This alternative would save 200 feet of full depth pavement. This alternative is a reduction in cost only.

Advantages:

- Reduces length and environmental impacts of the project
- Less disruption to local traffic

Disadvantages:

- No disadvantages anticipated

Discussion: The proposed profile along STA 48+00 to STA 50+00 is essentially the same – this area and the existing and proposed roadways are in the same location. The end of project can be moved 200 feet to STA 48+00 with no effect to the project other than a reduction in pavement costs, and less maintenance of traffic required.

Very minor revisions to the Concept Report would be required, however no major schedule impacts are anticipated to result from implementation of this alternative. Locating a logical terminus for the project is not a concern.

VE ALTERNATIVE A-2.0

Shorten the eastern termination point, end at STA 48+00 in lieu of STA 50+00

Baseline Concept Sketch

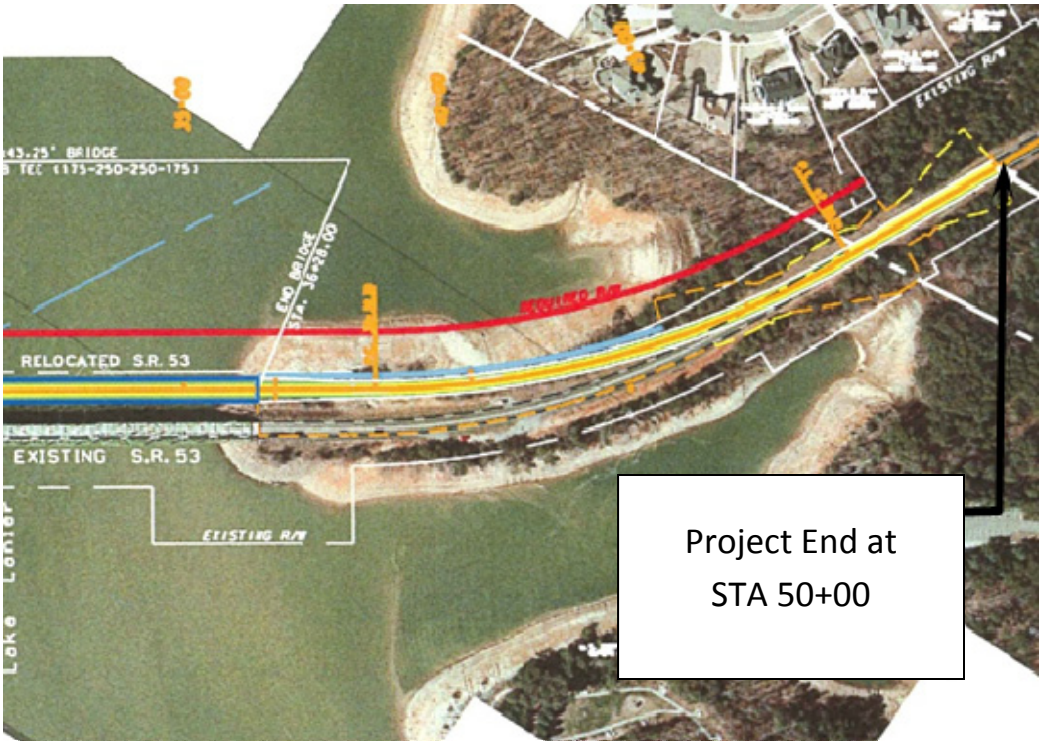

Alternative Concept Sketch

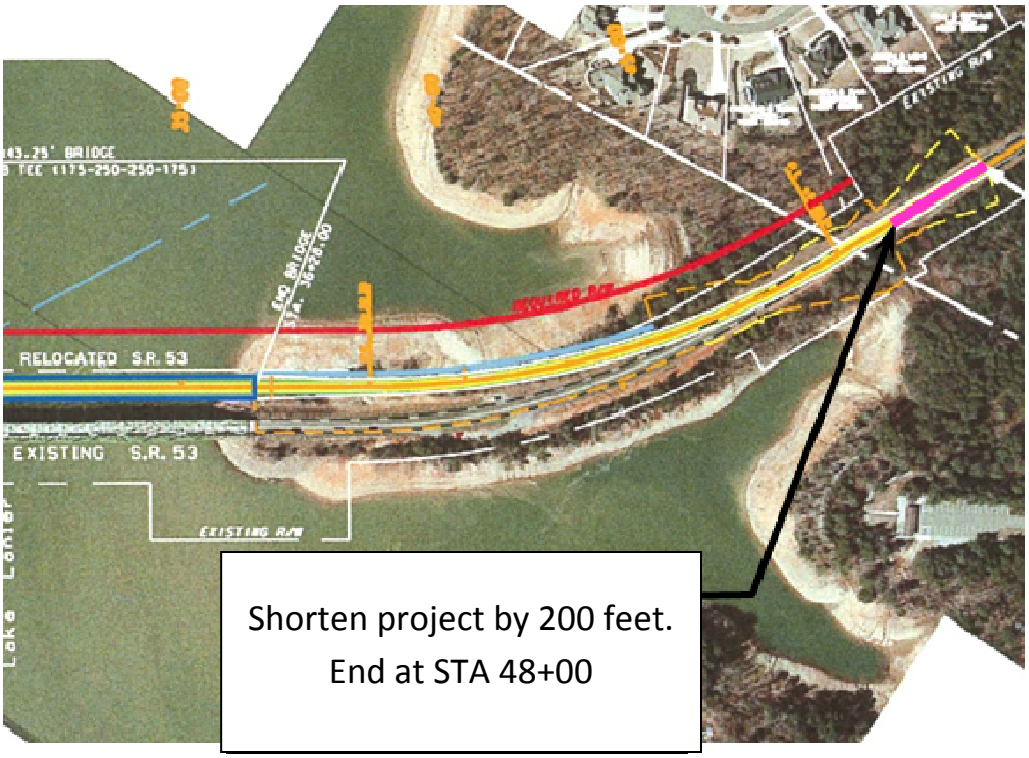

VE ALTERNATIVE A-2.0

Shorten the eastern termination point, end at STA 48+00 in lieu of STA 50+00

Assumptions and Calculations:

Total SY of pavement = 3,050LFx28ft/9ft/SY = 9,489SY
Cost / SY = $66.70/SY

Initial Cost Estimate

CONSTRUCTION ELEMENT		*BASELINE CONCEPT*			*ALTERNATIVE CONCEPT*		
Description	**Unit**	**Qty**	**Cost/Unit**	**Total**	**Qty**	**Cost/Unit**	**Total**
Pavement	SY	9,489	$ 66.70	$ 632,916	8,867	$ 67	$ 591,429
Pavement Markings	LF	800	$ 3	$ 2,464	0	$ -	$ -
Drainage (2.5% of Total Cost)	LS	1	$ 1,037	$ 1,037	0	$ -	$ -
Erosion Control (6% of Total Cost(	LS	1	$ 2,489	$ 2,489	0	$ -	$ -
Earthwork (15% of Total Cost)	LS	1	$ 6,223	$ 6,223	0	$ -	$ -
Guardrail (0.5% of Total Cost)	LS	1	$ 2,074	$ 2,074	0	$ -	$ -
				$ -			$ -
				$ -			$ -
				$ -			$ -
SUB-TOTAL				$647,203			$591,429
PROJECT MARK-UPS				$0			$0
TOTAL (Rounded)				$647,000			$591,000
						SAVINGS	**$56,000**

VE ALTERNATIVE B-7.0

Reduce the number of beams in Alternate B from 5 to 4

Initial Cost Savings: $254,000
LCC Savings: $0
Change in Schedule: No Change

Description of Baseline Concept: The baseline concept is the preferred alternate shown in the structure type study as "Alternate B" and is a continuous, spliced Bulb-T girder bridge. The section shown consists of five pre-stressed and post-tensioned concrete girders with 9-foot spacing with 3-foot 7 ½-inch overhangs.

Description of Alternative Concept: The alternative concept is to increase the spacing between the beams to 11 feet 4 inches and eliminate a girder line. The revised section would be four beams spaced at 11 feet 4 inches with 4-foot 7 ½-inch overhangs. This is the same spacing that was provided in the type study in Alternative D, Steel Plate Girder

Advantages:

- Eliminates a continuous girder from the bridge cross section which saves cost of materials and labor required to fabricate and install the girder
- One less beam will simplify the construction of the bridge by requiring fewer beam picks, less temporary shoring, splicing and post-tensioning activities
- Improves safety during construction
- One less beam reduces the loads on the foundations

Disadvantages:

- Load distribution will place more load on the remaining beams; may require more post-tensioning
- Slightly thicker deck will be necessary

Discussion: Reducing the number of beams on the bridge from five beams to four will increase the beam spacing to 11 feet 4 inches. This will save cost to the project by reducing the amount of material and labor necessary to erect this beam. The staged erection of the spliced girder involves the erection of shoring towers, setting the haunched segments on the bridge pier, setting the drop in segments, placing the bridge deck and the final post-tensioning. This sequence has to be performed for each girder on the bridge so removing one beam may result in a time reduction to erect the beams as well.

This alternative will make the beam erection safer since there are fewer beams to construct. The less time required to construct the bridge, the less chance there is for accidents. This is especially important when the majority of the construction operations will be performed from barges or work platforms in the water.

Reducing the number of beams will also reduce the load on the bridge piers and may have an impact on the bridge substructure cost by reducing the overall load on the foundations. This could not be evaluated as part of this study due to time constraints and the fact that geotechnical data was not available.

VE ALTERNATIVE B-7.0

Reduce the number of beams in Alternate B from 5 to 4

The GDOT bridge policy typically limits the maximum beam spacing to 9 feet without prior approval but the beam spacing of 11 feet 4 inches is the same as what was proposed in the Type study Alternate D for steel plate girders, so it is already being considered. Based on the GDOT beam charts the deck thickness will increase from 8 inches to 8 ¾ inches, but these charts are based on the allowable stress method. The deck design methodology for this bridge will be most likely be LRFD and the difference in thickness due this change would be less than ¾ inch. The Florida DOT Bridge manual states that the Florida Bulb-T beams top flange was designed accommodate a beam spacing up to 14 feet with an 8 ½ inch bridge deck using LRFD so it can be assumed that the final deck thickness will be not be greater than that.

The impacts of the larger spacing is a redistribution of the bridge dead and live loading that will put additional load and stresses on the remaining beams. It is assumed that the FBT-78 spliced girder is capable of handling these stresses by adding additional post-tensioning as well as increasing the concrete strength of the beams. The spliced girder design was at concept level and no calculations were provided so it could not be determined if a larger beam section would be needed, but it would appear to be possible based on similar designs of spliced girder bridges around the country.

Others in the Type Study Report considered the larger beam spacing. Alternate D is a steel plate girder alternate that utilized the larger beam spacing so the effect on the deck design has been considered.

Since the project is currently at concept level it would be possible to implement this alternative at little to no additional cost. Implementation of this alternative would have no impact on the schedule. There is very little risk involved with implementing this alternative since preliminary and final design has not yet begun. The beam spacing being proposed has been used on other similar projects throughout the country.

VE ALTERNATIVE B-7.0

Reduce the number of beams in Alternate B from 5 to 4

Baseline Concept Sketch

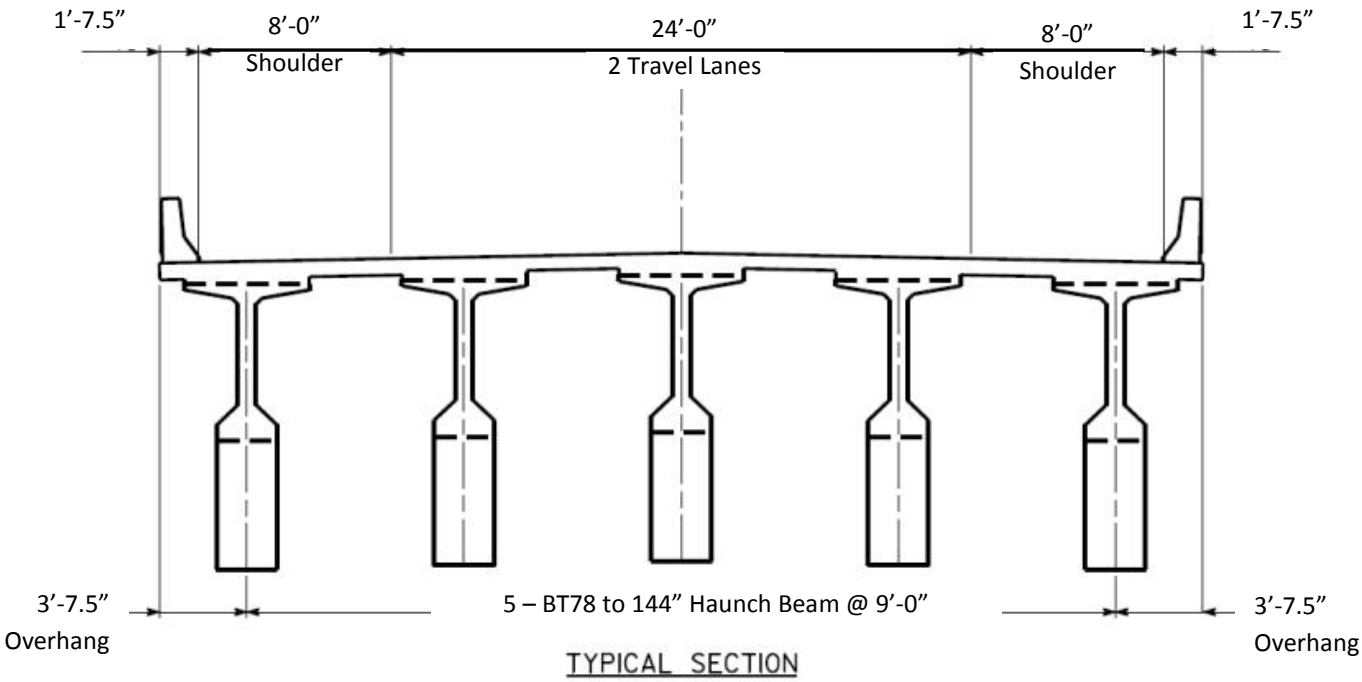

5 Florida Bulb-Tees
BT-78 Spliced Bulb-T beams
4 spaces @ 9'-0"; 3'-7 ½" overhangs

VE ALTERNATIVE B-7.0

Reduce the number of beams in Alternate B from 5 to 4

Alternative Concept Sketch

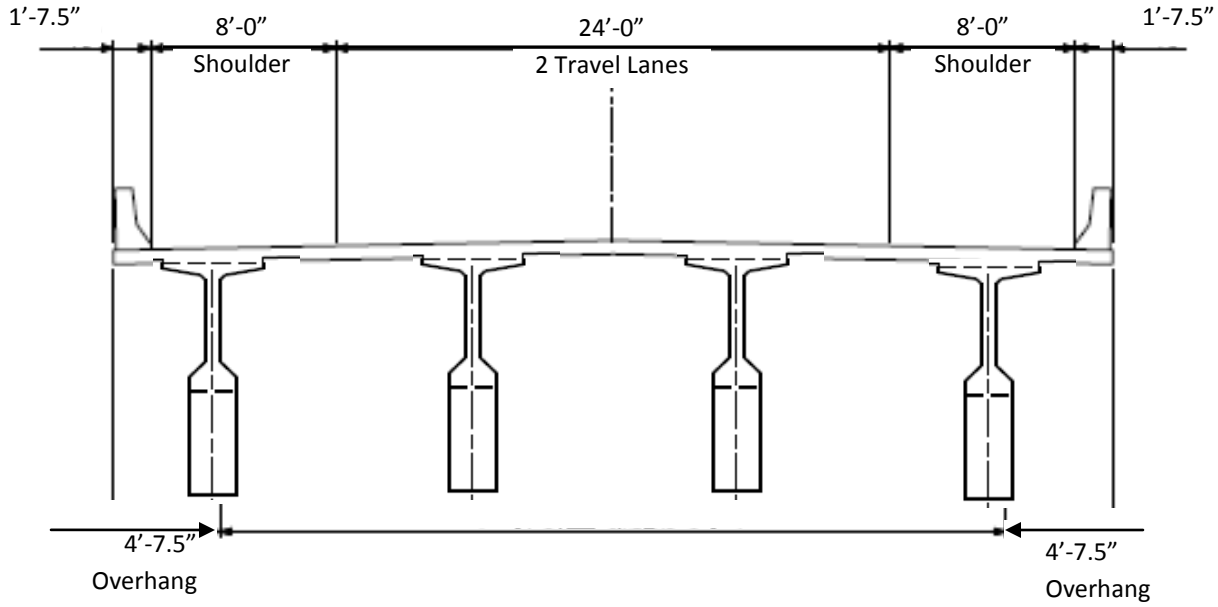

4-Haunched Florida Bulb Tees
BT-78 Spliced Bulb -T Beams
3 Spaces @ 11'-4" with 4'-7 ½" Overhangs

VE ALTERNATIVE B-7.0

Reduce the number of beams in Alternate B from 5 to 4

Assumptions and Calculations: The assumptions for this alternative are as follows:

1. Beam type would not increase larger than BT-78.
2. Increase the exiting amount of post-tensioning will be proportional to the increase in load.
3. Bridge will be designed using AASHTO LRFD Methodology

Calculations:
Existing Effective span of bridge deck:

Flange width: 5.0833’
Spacing: 9’
Eff. Span: 9-(5.08333/2)= 6.54~ 6’-6”

Calculations:
Values taken from the Cost Estimate for Alt B of the Bridge Type Study Report and the associated Bridge Plans.

Length of BT-78 segments:
2x 150’=300’
2x 125’= 250’
Total= 550’
Length of Haunched BT-78
3 x 100’=300’

Additional Post-tensioning steel necessary:
PT req’d for 5 Beams= 9435 LB or 1887 # per beam
remove 1 beam =1/5~ 20% reduction
Assume 20% Additional PT steel needed:
1.2 x 1887 lb= 2264
Existing Effective span of bridge deck:

Flange width: 5.0833’
Spacing: 11’-4”
Eff. Span: 11.333-(5.08333/2)= 8.788 ~ 8’-10”

VE ALTERNATIVE B-7.0

Reduce the number of beams in Alternate B from 5 to 4

SERVICE LOAD DESIGN OF BRIDGE SLAB

Minimum slab thickness is 7”

Maximum main reinforcement spacing is 9”

Georgia Department of Transportation
Office of Bridge and Structural Design
May 2007 19-Oct-07

Wheel Load (Kips)	fc (ksi)	fs (ksi)	n	Slab Cover (in)	Future Paving (kips/ft^2)	Continuity Factor
16.00	**1.400**	**24.000**	**9**	**2.250**	**0.030**	**0.8**
Effective Span Length (ft-in)	**Slab Thickness Minimum (in)**	**Slab Thickness Actual (in)**	**Size and Spacing of Main Reinforcement (in)**		**Distribution Reinforcement Middle Half**	**Distribution Reinforcement Outer Quarters**

Existing Deck Design

6- 6	7.8889	8.000	# 5 at	6.500	7 - # 4	4 - # 4
6- 7	7.9167	8.000	# 5 at	6.375	7 - # 4	4 - # 4
6- 8	7.9445	8.000	# 5 at	6.375	7 - # 4	4 - # 4

Alternative Deck Design

8- 9	8.6487	8.750	# 5 at	5.625	10 - # 4	6 - # 4
8- 10	8.6754	8.750	# 5 at	5.500	10 - # 4	6 - # 4
8- 11	8.7020	8.750	# 5 at	5.500	11 - # 4	6 - # 4

Difference in thickness is:

8.75”-8.00”= .75”

Deck concrete Volume Difference:

(0.75”/12 x 850’x 43.25’)/27 = <u>85.1 cy of Concrete Saved</u>

VE ALTERNATIVE B-7.0

Reduce the number of beams in Alternate B from 5 to 4

Initial Cost Estimate

CONSTRUCTION ELEMENT		*BASELINE CONCEPT*			*ALTERNATIVE CONCEPT*		
Description	**Unit**	**Qty**	**Cost/Unit**	**Total**	**Qty**	**Cost/Unit**	**Total**
BT-78 PSC beam segment	LF	550	$ 240.00	$ 132,000			
BT-78 PSC Haunched beam segment	LF	300	$ 500	$ 150,000			$ -
Post-tensioning	LB	0	$ 3	$ -	2,264	$ 2.50	$ 5,660
Bearings 251-500 kips	EA	2	$ 4,100	$ 8,200			$ -
Bearings 1001-1250 kips	EA	3	$ 6,800	$ 20,400			$ -
				$ -			$ -
Deck Concrete	CY	0	$ 600	$ -	85	$ 600	$ 51,000
				$ -			$ -
				$ -			$ -
SUB-TOTAL				$310,600			$56,660
PROJECT MARK-UPS				$0			$0
TOTAL (Rounded)				$311,000			$57,000
						SAVINGS	**$254,000**

VALUE ALTERNATIVE B-9.0

Eliminate bridge deck overhangs on Alternative B

Initial Cost Savings:	$91,000
LCC Savings:	$0
Change in Schedule:	1 – 2 Weeks Saved

Description of Baseline Concept: The baseline concept bridge cross-section consists of five beams spaced at 9 feet with 3-foot 7 ½-inch overhangs.

Description of Alternative Concept: This alternative proposes to increase the beam spacing to 9 feet 6 ½ inches and eliminate the bridge overhang by utilizing a cast-in-place (CIP) form on the top flange to form the deck up to the edge of the exterior beam.

Advantages:

- Eliminates the labor and cost to set exterior deck forms on both sides of the bridge
- Simplifies the deck design
- Faster bridge construction time
- Less risk for the contractor constructing the bridge by eliminating the portion of the deck construction where workers are the least protected

Disadvantages:

- Slightly larger beam spacing requires a 1/8 inch thicker deck
- Difficulties with construction such as screed supports as well as some design detailing issues

Discussion: The bridge deck overhangs are the most complicated portion of the bridge deck to design and construct. The forming of the bridge deck overhang requires the workers to overhang the bridge both to erect and dismantle the formwork. It is a very labor intensive activity. Additionally, this is also a dangerous activity for the workers since they must hang over each side of the deck and are exposed to a fall from the bridge while performing the work. Removing the need to construct the bridge deck overhangs would reduce the risks associated with forming the bridge deck.

The time required to from the deck would also be greatly reduced since the need to set the form support brackets for the overhangs is eliminated. Since the entire deck can be formed using the stay-in-place forms that are placed between flanges of the beams there is no need to set or remove the overhang forms which takes the highest percentage of time required in the deck construction activity.

This method of constructing the bridge deck overhangs is being utilized on the US 17 Bypass Bridge in North Carolina as well as on the replacement of the Skidaway Narrows Bridge near Savannah, Georgia.

The top flange width of the bridge beams proposed in the preferred alternate is 5 feet 1 inch wide. This width is well suited to using no overhang since it is so much wider than a typical AASHTO bridge beam. The flange on the exterior beam creates a minimum overhang of 2 feet 6 ½ inches without the deck overhanging the beam. The deck would be formed by placing a cast-in-place concrete edge form on the outside edge of the top flange during the fabrication of the exterior beam and then using it to form the deck once the beams are set. The CIP edge form becomes a part of the bridge rail/ barrier.

VALUE ALTERNATIVE B-9.0

Eliminate bridge deck overhangs on Alternative B

There are detailing issues that will need to be overcome during the final design stage if this alternative is selected. There is also an issue of how the deck screed will be placed in this scenario. These issues can be overcome with good engineering and planning during the design phase. No impact to the design or permitting schedule is anticipated. There could be 1 – 2 weeks saved during the bridge construction by simplifying the deck forming.

Baseline Concept Sketch

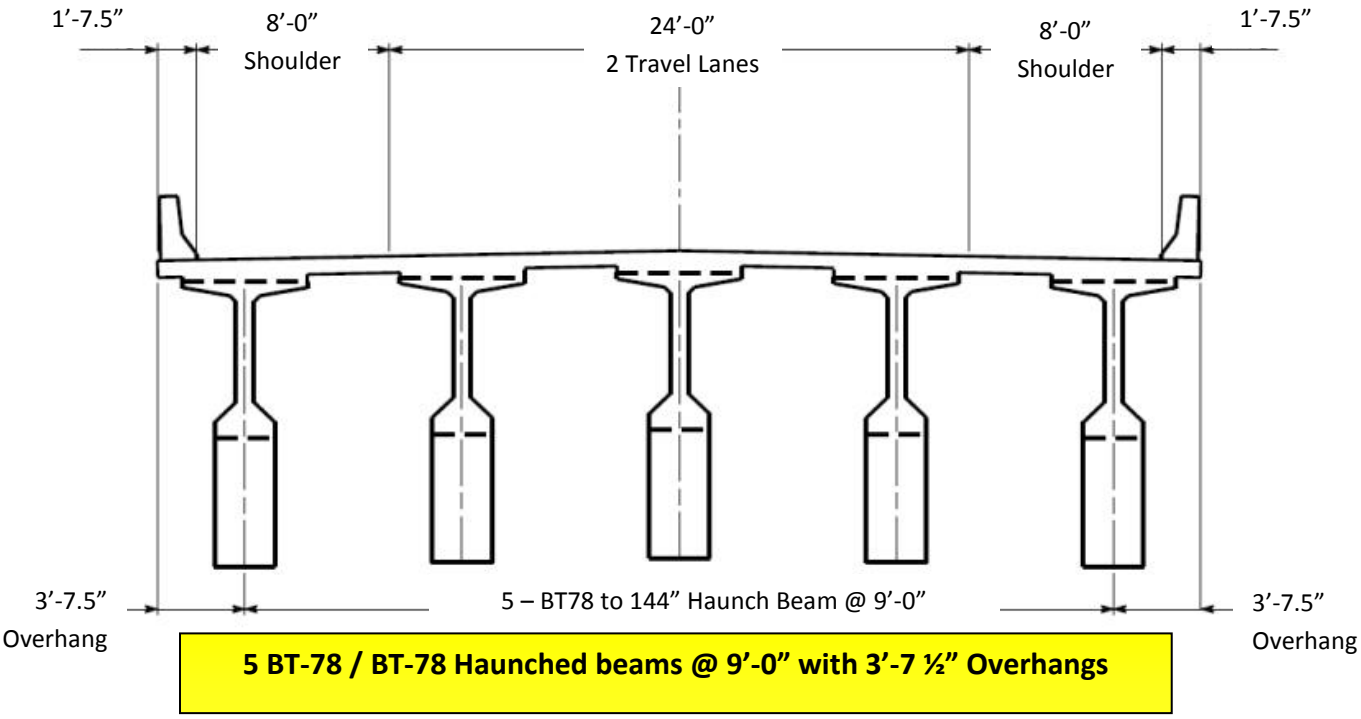

VALUE ALTERNATIVE B-9.0

Eliminate bridge deck overhangs on Alternative B

Alternative Concept Sketches

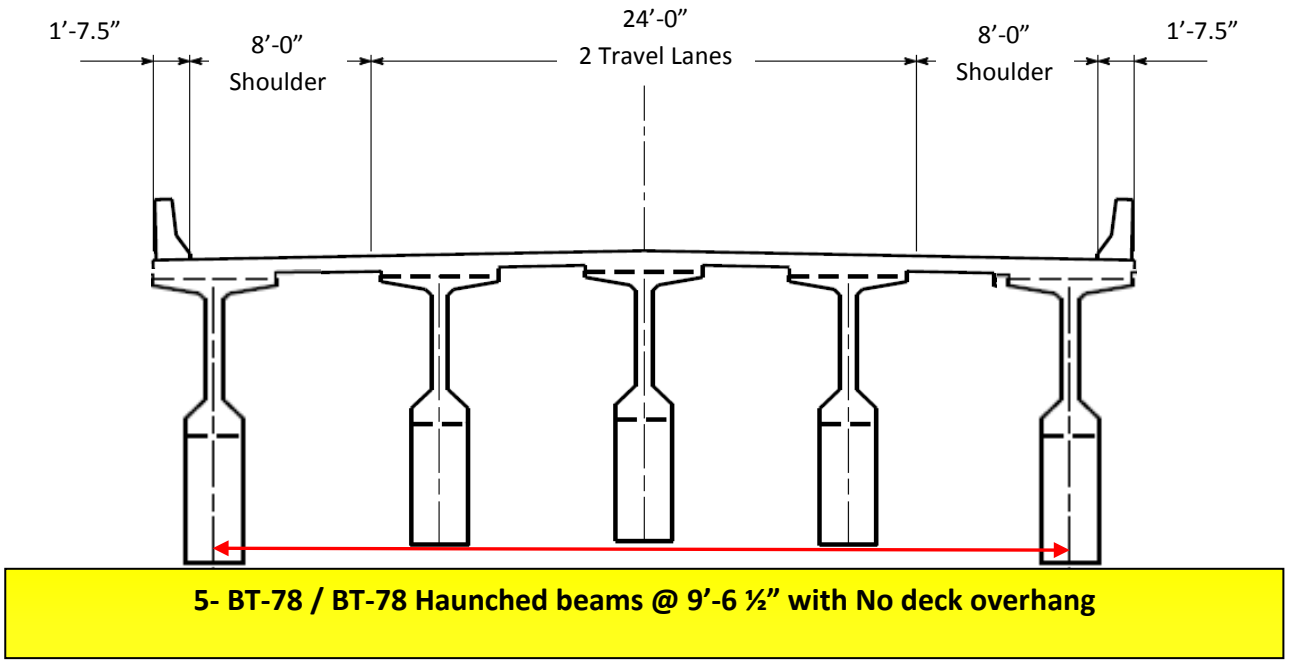

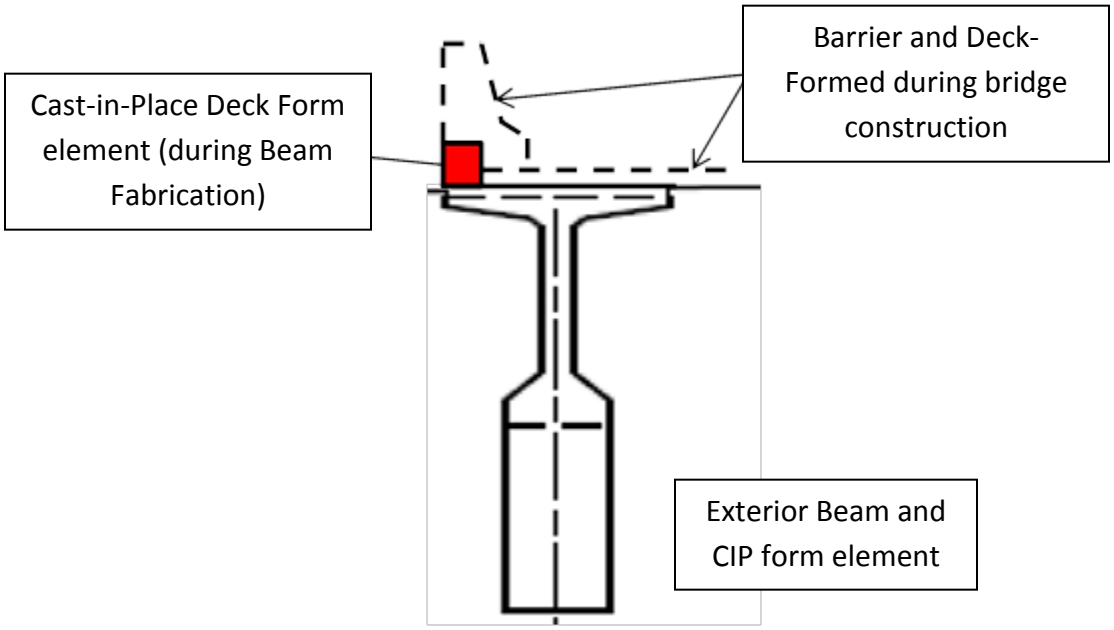

SECTION
Exterior Beam with CIP deck form on top flange

VALUE ALTERNATIVE B-9.0

Eliminate bridge deck overhangs on Alternative B

Assumptions and Calculations:

1. Additional Deck thickness necessary is 1/8”
   Cost to set bridge deck overhangs is $58/linear ft of overhang

2. Additional deck concrete volume:
   0.125”/12*850’*43.25’=4595 cf ~ 14.2 cy

Initial Cost Estimate

CONSTRUCTION ELEMENT		*BASELINE CONCEPT*			*ALTERNATIVE CONCEPT*		
Description	**Unit**	**Qty**	**Cost/Unit**	**Total**	**Qty**	**Cost/Unit**	**Total**
Cost to set Overahng Deck Forms	LF	1,700	$ 58.00	$ 98,600			
Additonal Deck concrete	CY			$ -	14	$ 600	$ 8,400
				$ -			$ -
				$ -			$ -
				$ -			$ -
SUB-TOTAL				$98,600			$8,400
PROJECT MARK-UPS				$0			$0
TOTAL (Rounded)				$99,000			$8,000
						SAVINGS	**$91,000**

VE ALTERNATIVE B-10.0

Increase deck concrete strength from 3,500psi to 4,500psi

Initial Cost Savings:	$34,000
LCC Savings:	$0
Change in Schedule:	No Change

Description of Baseline Concept: Deck Concrete Strength as specified by GDOT Bridge Policy Manual is 3,500psi. Per the GDOT deck Design Tables the required deck thickness for the preferred alternative is 8 inches.

Description of Alternative Concept: Increase the deck concrete strength to 4,500psi and reduce the deck thickness and reinforcing.

Advantages:

- Reduces the amount of concrete in the deck
- Thinner deck is lighter and will reduce load on the beams, piers and foundations
- Higher strength concrete has improved durability

Disadvantages:

- 4500psi concrete is more expensive

Discussion: Increasing the concrete strength (f'c) from 3500psi to 4500psi will allow a thinner deck to be utilized for the bridge. The benefits of the thinner deck are lower cost due to less material, a reduced weight per linear foot, and improvements to the long term durability of the deck. Deck concrete strength of 4000psi and higher is used by many other state DOTs; 4500psi concrete is an achievable strength for cast in place concrete by most contractors working in Georgia at little to no additional cost.

The benefits of reducing the weight of the deck extend from the deck itself all the way to the foundations. The lighter deck requires less steel and less concrete which reduces the load on the concrete beams. Lower load on the beams means less pre-tensioning and post-tensioning required. The load reduction will impact the piers and the foundations as well and may allow for shallower drilled shaft tips and pile tips at the end bents. Finally increasing the concrete strength will improve the durability of the deck concrete. This will mean the deck will perform as designed for a longer period of time and require less maintenance over the life of the bridge. A stronger deck would require fewer repairs and would not need replacement or rehabilitation as often. The Office of Bridge Design, Office of Construction and Office of Maintenance have expressed that one of the goals of bridge replacement projects is reducing the required maintenance after the project is built and a stronger bridge deck will help to meet that goal.

The assumed deck thickness for the preferred alternative and f'c=3500psi, is 8 inches according to the GDOT deck design charts. The alternative design assumes f'c=4500psi. The calculated deck thickness using this new concrete strength is 7 ¼ inches. This is a reduction of ¾ inch of concrete thickness. This alternative increases the amount of steel per foot by 20%. This alternative comparison uses the GDOT deck design charts which are based on allowable stress methodology. LRFD methodology is currently required for all new bridge design projects, but the preliminary calculations provided in the type study indicate that it has not been used in the concept design. Designing the deck using the LRFD

methods would result in a thinner design than what is currently assumed. This further reduction was not accounted for in this alternative.

The total reduction in weight of the structure is approximately 170 tons. The weight reduction at each interior bent is about 50 tons per bent. The cost impacts of the reduction of the dead load could not be evaluated since the geotechnical study is not complete and the foundations have not been fully designed.

This alternative will require very little rework since the preliminary and final design stage have not begun at this time.

VE ALTERNATIVE B-10.0

Increase deck concrete strength from 3,500psi to 4,500psi

Baseline Concept Sketch

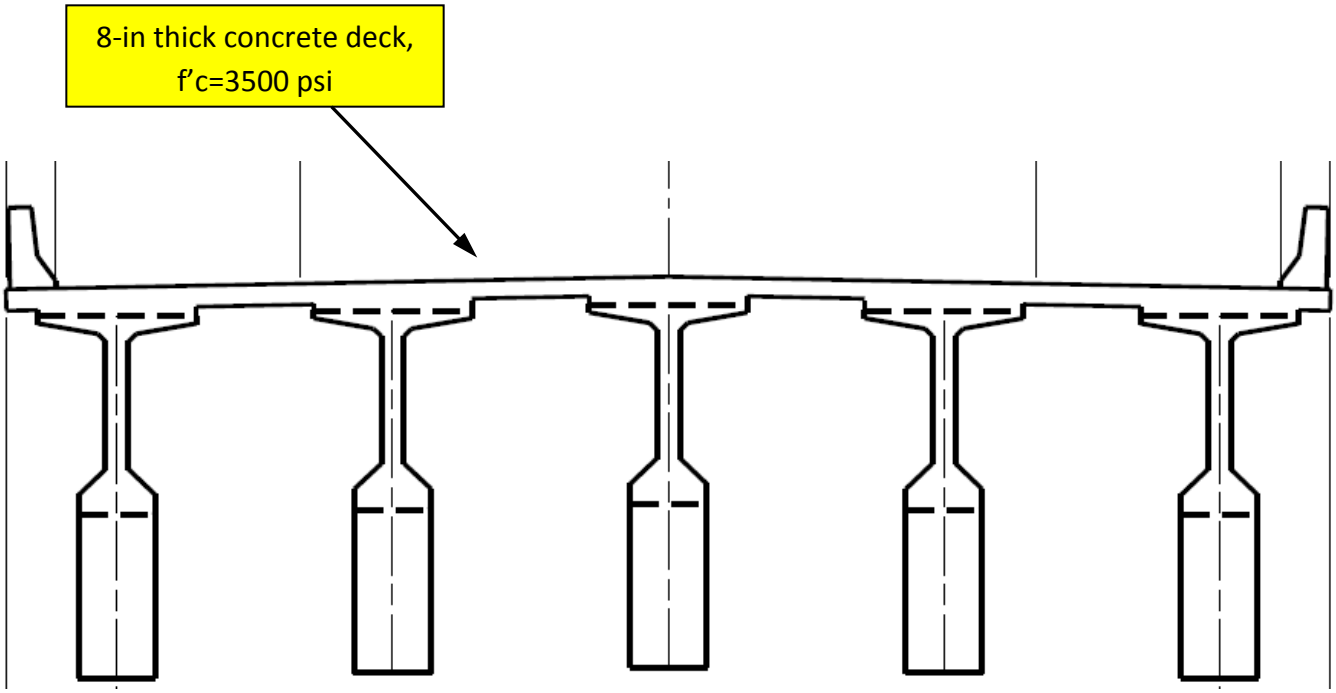

Alternative Concept Sketch

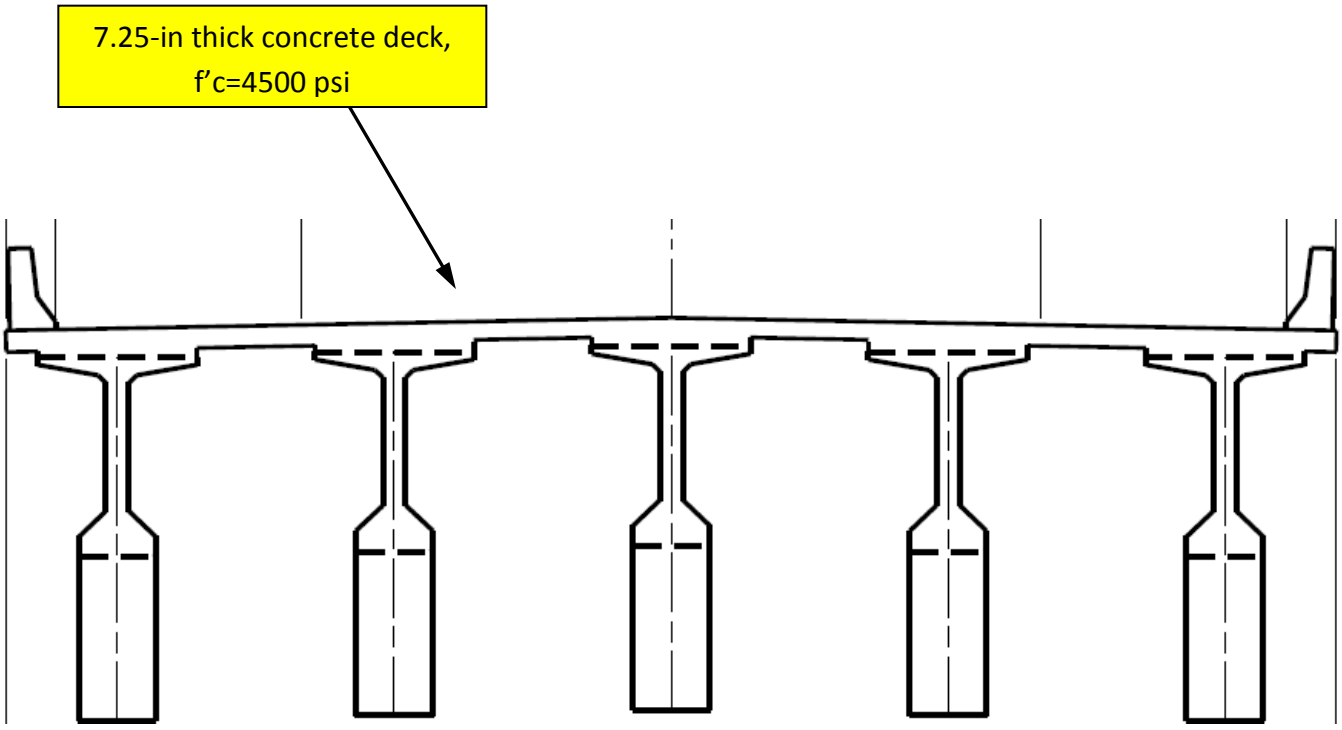

VE ALTERNATIVE B-10.0

Increase deck concrete strength from 3,500psi to 4,500psi

Assumptions and Calculations:

1. f'c= 3,500psi is the preferred alternative deck concrete strength, per the GDOT Bridge Design Policy Manual.

2. Allowable stress design was used to approximate the deck design.

Calculations:
Effective span of bridge deck:

Top Flange width: 5.0833'

Spacing: 9ft

Eff. Span: 9-(5.08333/2)= 6.458 ~ 6'-6"

Existing design, 3500 psi; fc= 0.4f'c=1.4 ksi

SERVICE LOAD DESIGN OF BRIDGE SLAB (From GDOT BRSLAB Output; fc=1.4 ksi)

Wheel Load (Kips)	fc (ksi)	fs (ksi)	n	Slab Cover (in)	Future Paving (kips/ft^2)	Continuity Factor
16.00	1.400	24.000	9	2.750	0.030	0.8

Eff. Span	Min Slab Thickness	Actual Slab Thickness	Spacing of Reinf.	Distrib Reinf. Middle 1/2	Distrib Reinf. Outer 1/4
6'-6"	7.889"	8.00"	#5@6.5"	7- #4	4- #4

Alternative design, 4500 psi; fc= 0.4f'c=1.8 ksi

Wheel Load (Kips)	fc (ksi)	fs (ksi)	n	Slab Cover (in)	Future Paving (kips/ft^2)	Continuity Factor
16.00	1.800	24.000	9	2.750	0.030	0.8

Eff. Span	Min Slab Thickness	Actual Slab Thickness	Spacing of Reinf.	Distrib Reinf. Middle 1/2	Distrib Reinf. Outer 1/4
6'-6"	7.1482"	7.25"	#5@5.5"	8- #4	4- #4

Concrete Volume Change

8"-7.25"= .75"

0.75"/12 x 850' x 43.25' =2297 cf~ 85 cy

VE ALTERNATIVE B-10.0

Increase deck concrete strength from 3,500psi to 4,500psi

Steel Reinforcing Change

Main Reinforcing:

Existing- #5 @ 6.5”; 1.043 lb/ft
Weight of Main Steel , Original Design
# of Bars = (((850’*12)/6.5”)+1)*2= 3140 bars

Bar length
(43.25’-.5’)= 42.75’
Weight = 42.75’*3140*1.043= 140,027#

#5@ 5.5” ; As= 0.676 in^2/ft
Weight of Main Steel , Alternative Design
# of Bar = (((850’*12)/5.5”)+1)*2= 3711 bars

Weight = 42.75’*3711*1.043= 165,466#

Distribution Bars
1 extra #4 bar per bay
Additional 4 bars
Splice length (60 foot maximum bar length)
850’/60’ =14.17 ~ 14 splices
Assume 2 foot lap required for #5
14’*2= 28’~ say 30 feet
(850’+30’) *.668 #/ft* 4bars = 2351 Lb

Total additional steel needed = (165,470+2350) - 140,030= 27,790 lb

Initial Cost Estimate

CONSTRUCTION ELEMENT		*BASELINE CONCEPT*			*ALTERNATIVE CONCEPT*		
Description	**Unit**	**Qty**	**Cost/Unit**	**Total**	**Qty**	**Cost/Unit**	**Total**
Superstructure concrete	cy	85	$ 600.00	$ 51,000			
Superstructure reinforcing				$ -	27,790	$ 1	$ 16,674
				$ -			$ -
				$ -			$ -
				$ -			$ -
SUB-TOTAL				$51,000			$16,674
PROJECT MARK-UPS				$0			$0
TOTAL (Rounded)				$51,000			$17,000
						SAVINGS	**$34,000**

VE ALTERNATIVE B-13.0

Shorten the drilled caissons by 20 to 25 feet

Initial Cost Savings:	Design Suggestion
LCC Savings:	$0
Change in Schedule:	1 Week Savings

Description of Baseline Concept: There has not been a geotechnical study performed on the project and the baseline design assumes that the foundations for the bridge will be founded on the hard rock stratum using drilled caissons. The caissons would be socketed 15 feet into the hard rock layer.

Description of Alternative Concept: During the geotechnical investigation phase, it is suggested that a foundation alternative be explored to terminate the drilled piers within the upper weathered rock/soil stratum instead of the rock. This would shorten the drilled caissons by an average of 20 to 25 feet.

Advantages:

- Reduces length of drilled caissons
- Some time savings is expected in the caisson drilling operation

Disadvantages:

- May require more or larger drilled caissons depending upon end bearing and friction capabilities
- Additional geotechnical analysis may be necessary to compare the deeper end bearing caissons with the shorter caissons

Discussion: The existing bridge structure uses spread footings founded in the upper weathered rock stratum and has performed well for more than 50 years. Extending the drilled caissons deeper into the rock layer is a prudent solution, but may add a significant cost to the bridge foundation. Alternate solutions should be considered and could include driven friction or mini-piles, spread footings, or mat foundations. Further analysis of these types of foundation options could yield cost savings for the project.

The bridge dead load for the new concrete structure will be significantly higher than the existing steel bridge, so careful analysis of all foundation conditions needs to be conducted. The scope of this analysis though should be broadened to include a wider range of possible foundation types.

To accomplish the recommended foundation analysis, the design team will need detailed geotechnical data at the pier locations. These services, if not already under contract, should be initiated as soon as possible to ensure the information is available for the next phase of design. Since the general practice at GDOT is to drill caissons down to rock, careful evaluation may be needed and a Go/No Go decision made following review of the geotechnical analysis.

Reducing the length of caissons will speed construction of the foundation piers and since this activity is on the critical path, some savings in the total project schedule should be noted. The time savings should be in the range of 3 to 5 days.

VE ALTERNATIVE B-13.0

Shorten the drilled caissons by 20 to 25 feet

Baseline Concept Sketches

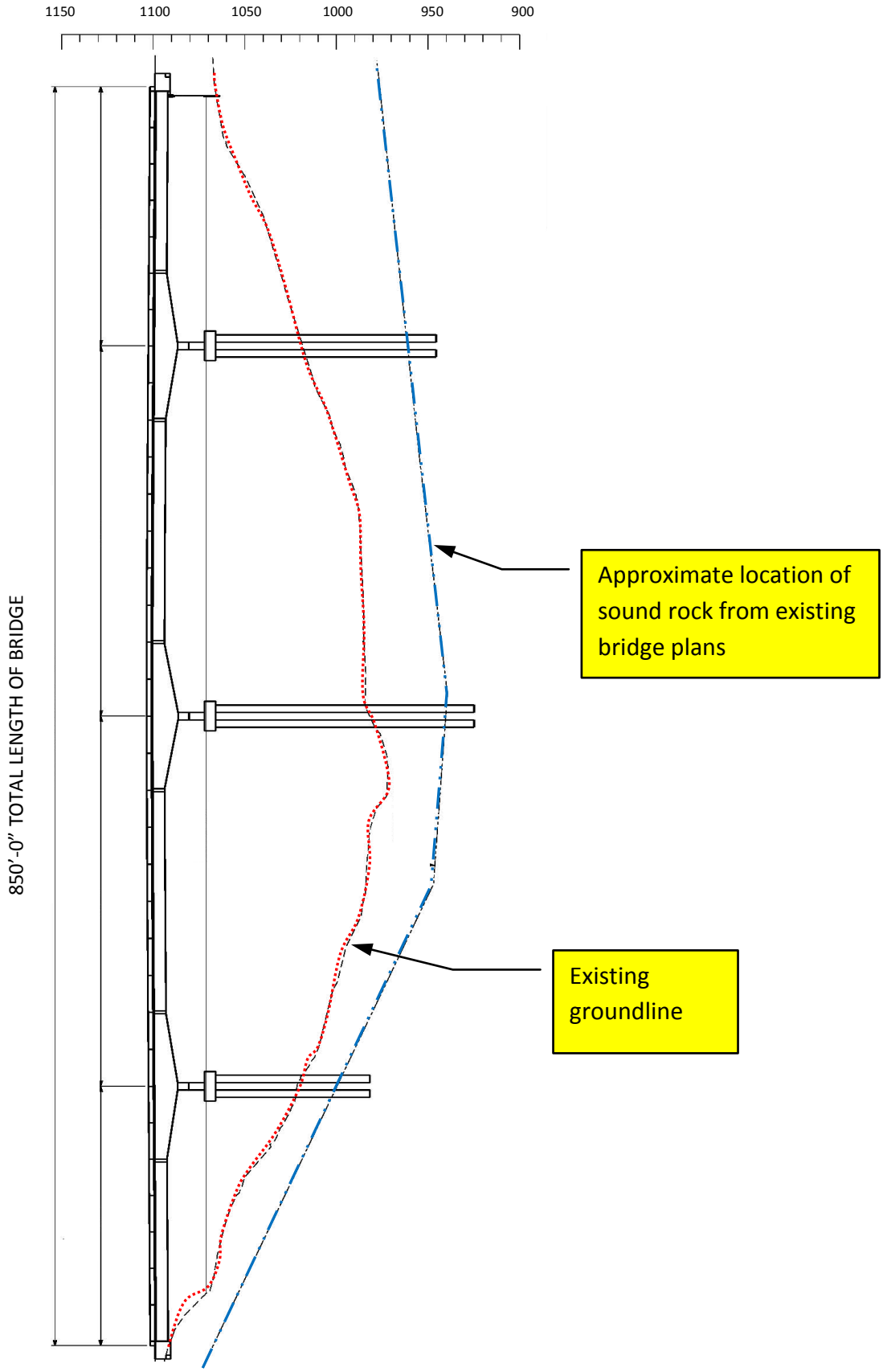

VE ALTERNATIVE B-13.0

Shorten the drilled caissons by 20 to 25 feet

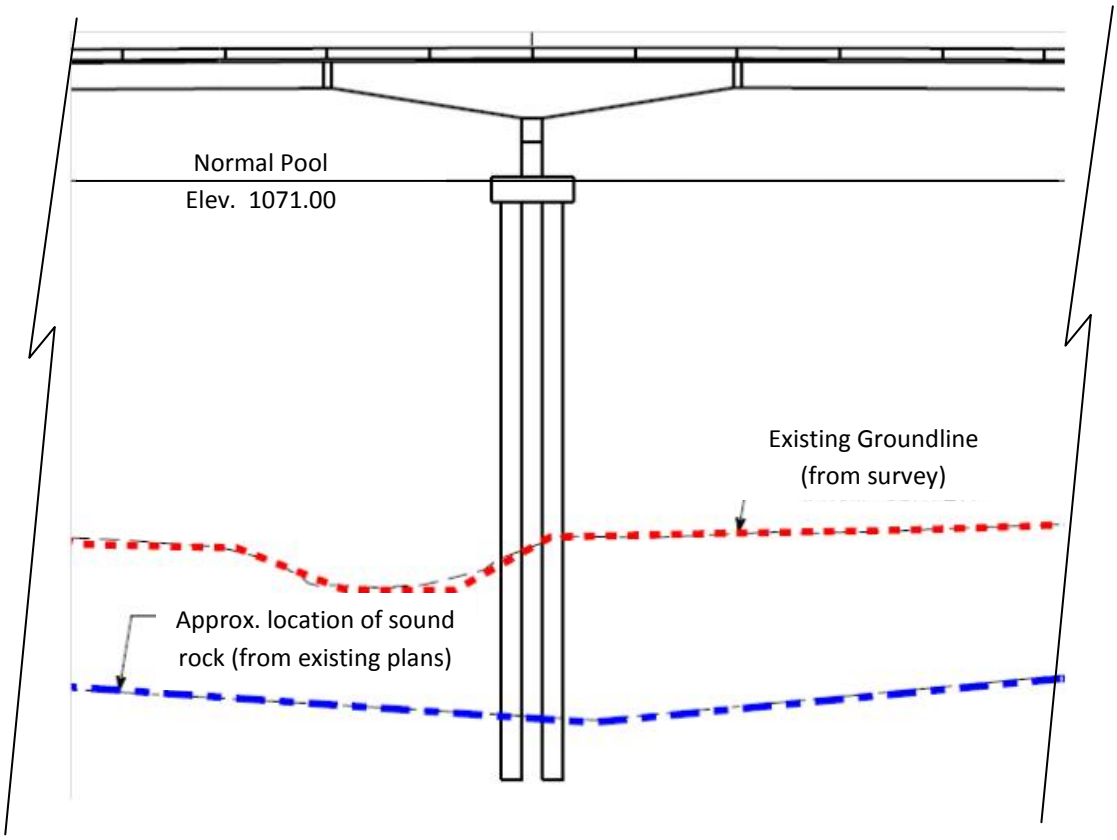

VE ALTERNATIVE B-13.0

Shorten the drilled caissons by 20 to 25 feet

Alternative Concept Sketches (Foundation Options)

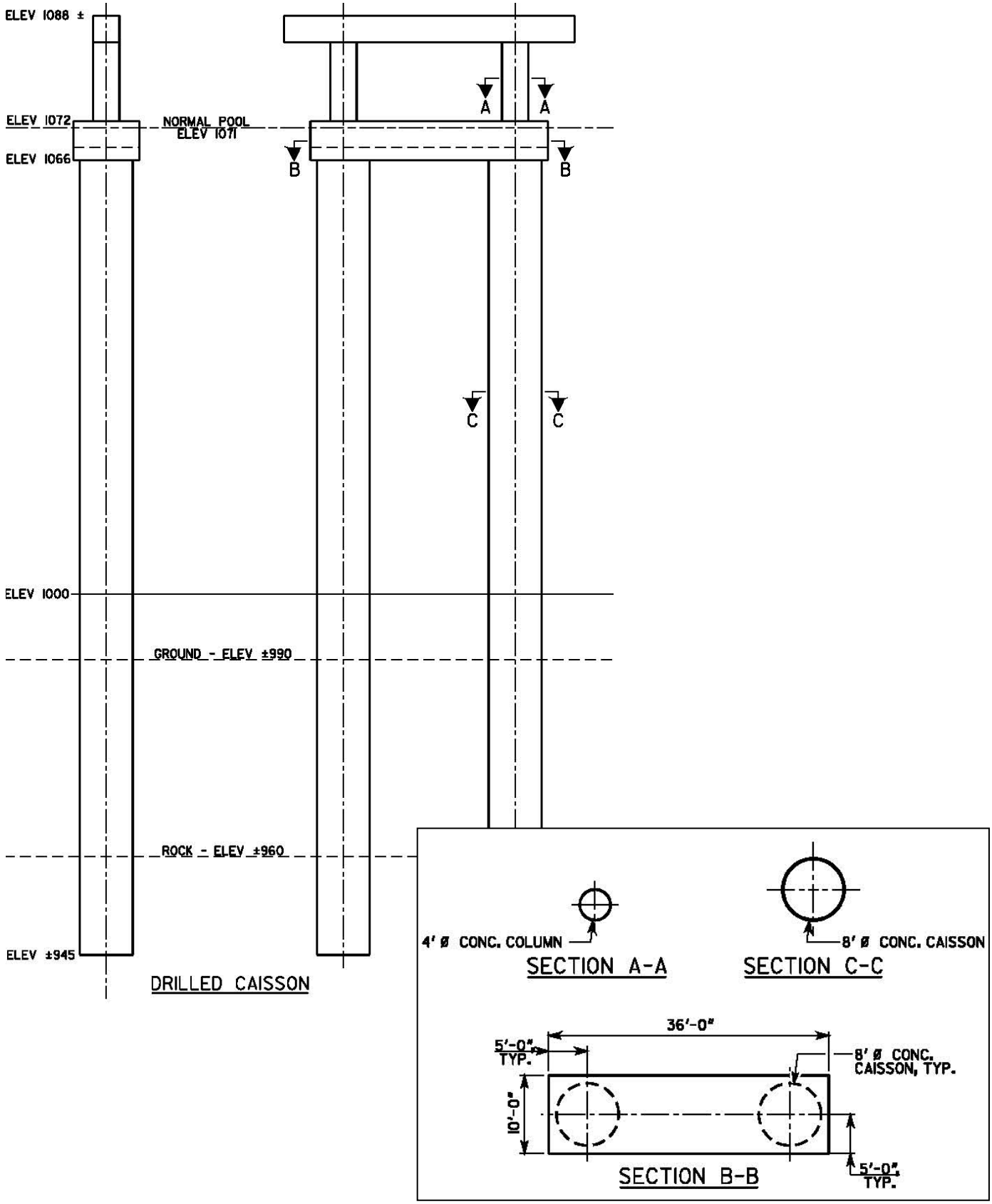

VE ALTERNATIVE B-13.0

Shorten the drilled caissons by 20 to 25 feet

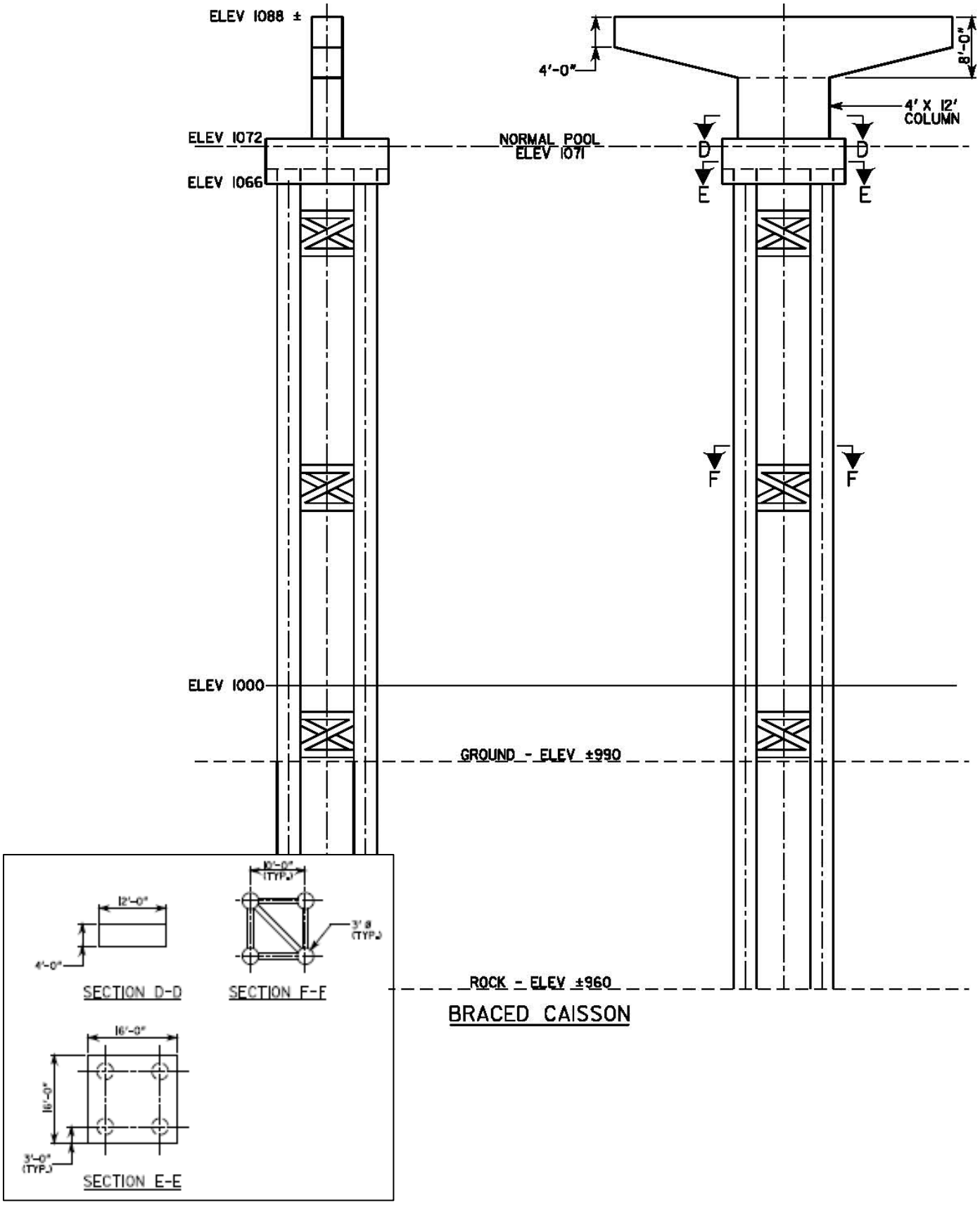

VE ALTERNATIVE B-13.0

Shorten the drilled caissons by 20 to 25 feet

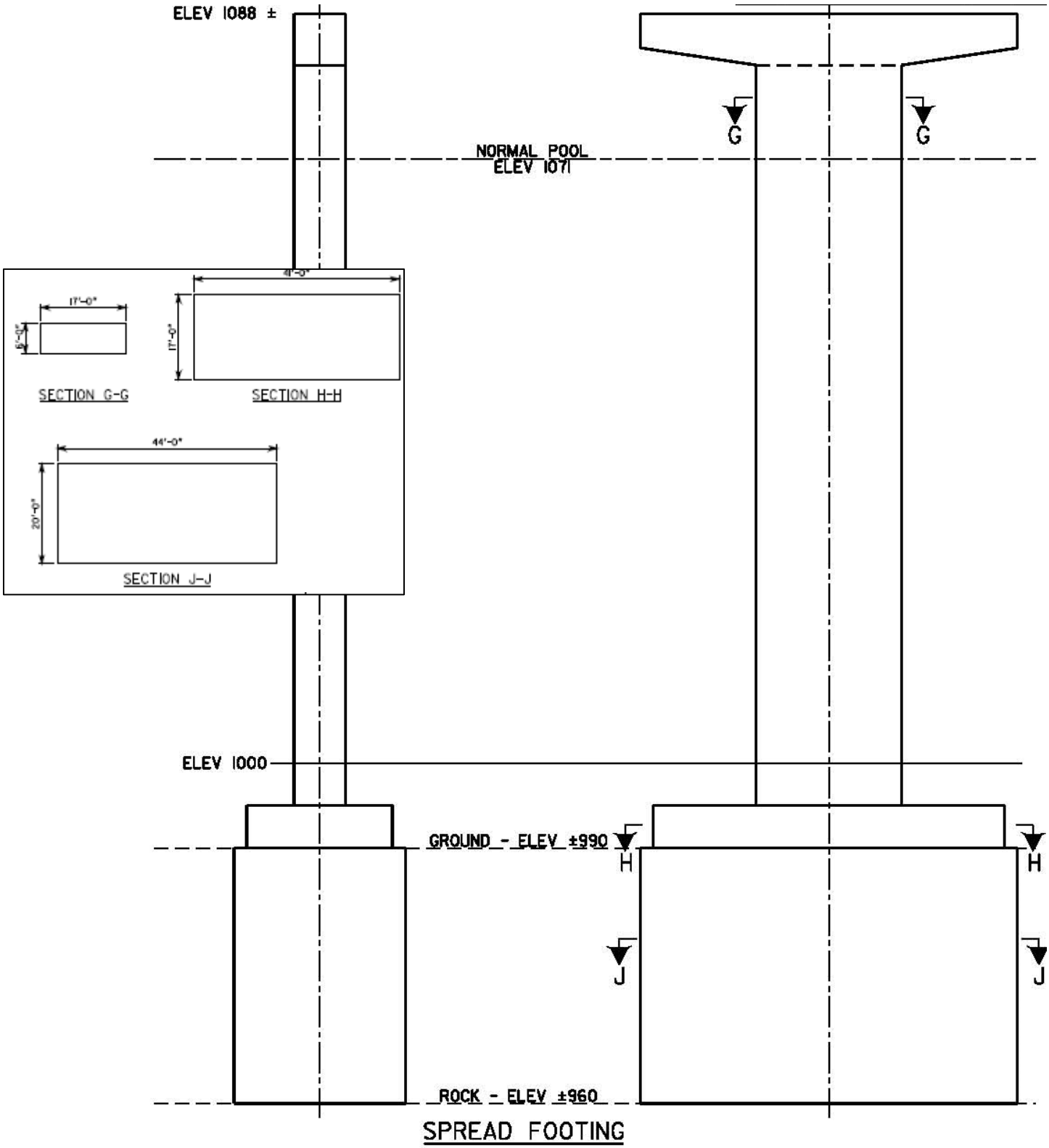

VE ALTERNATIVE B-13.0

Shorten the drilled caissons by 20 to 25 feet

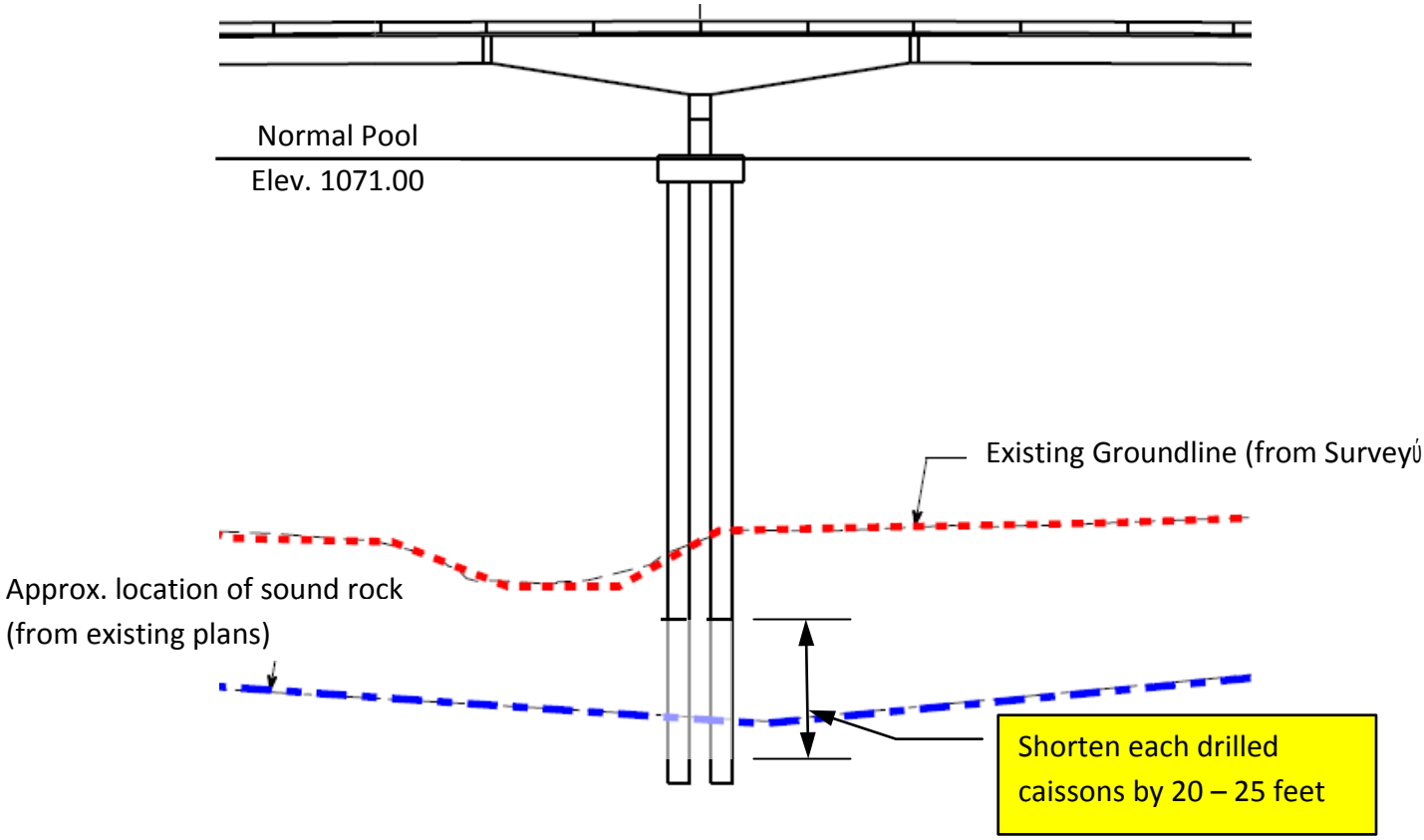

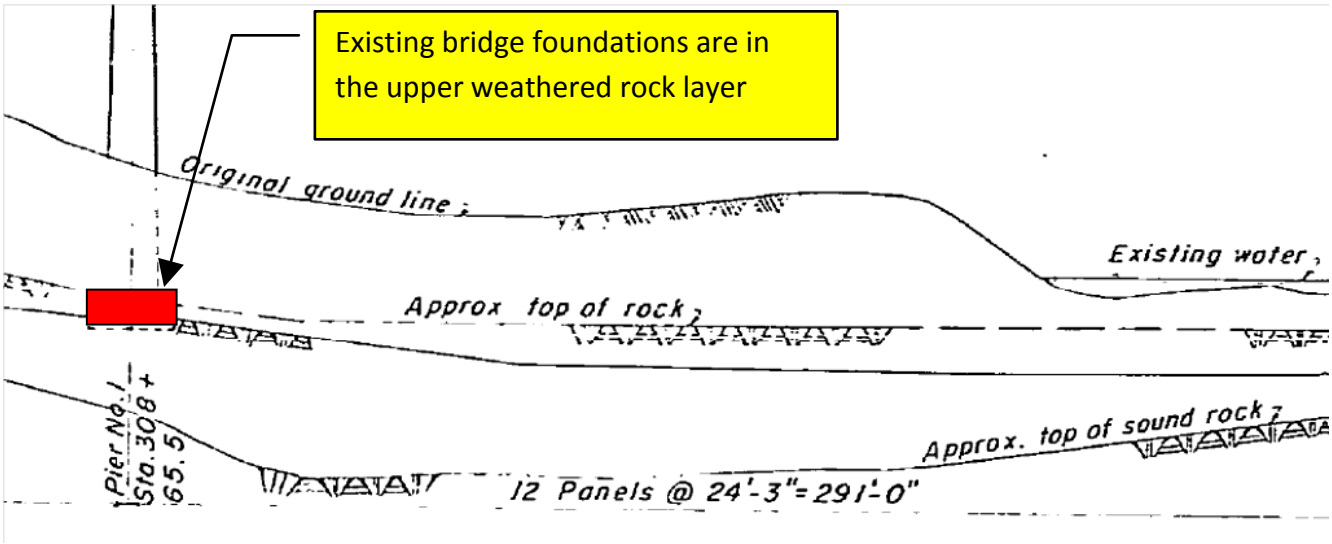

Existing Bridge Foundation

VE ALTERNATIVE B-13.0

Shorten the drilled caissons by 20 to 25 feet

Assumptions and Calculations: It is assumed that the soil layer above the rock has a reasonable bearing capacity and that the drilled caissons could be founded at a higher elevation than currently planned and that each caisson could be shortened by 20 to 25 feet each. Geotechnical investigations would need to verify this assumption and the potential cost savings adjusted as needed if the length or diameter of the recommended caissons change.

Initial Cost Estimate

CONSTRUCTION ELEMENT		*BASELINE CONCEPT*			*ALTERNATIVE CONCEPT*		
Description	**Unit**	**Qty**	**Cost/Unit**	**Total**	**Qty**	**Cost/Unit**	**Total**
				$ -			
				$ -			$ -
Drilled Caissons (each pier)	LF	244	$ 1,850	$ 451,400	184	$ 1,850.00	$ 340,400
(Assumes each caisson is 20ft shorter)				$ -			$ -
				$ -			$ -
X 3 Piers				$ 3			$ 3
				$ -			$ -
				$ -			$ -
				$ -			$ -
				$ -			$ -
				$ -			$ -
				$ -			$ -
SUB-TOTAL				$1,354,200			$1,021,200
PROJECT MARK-UPS				$0			$0
TOTAL (Rounded)				$1,354,000			$1,021,000
						SAVINGS	**$333,000**

VE ALTERNATIVE CM-2.0

Allow a base bid bridge design (Alternate B) with allowable design bid options by the contractor

Initial Cost Savings:	$245,000
LCC Savings:	$0
Change in Schedule:	No Change

Description of Baseline Concept: The current project delivery approach uses Alternate B, with 78-inch Florida Spliced Continuous Bulb-T Concrete Girders for the bridge, and spans consisting of 175 feet, 250 feet, 250 feet and 175 feet. The design will be bid along with the roadway approaches as a single lump sum contract.

Description of Alternative Concept: This alternative proposes to modify the procurement approach to allow for bids with alternative foundation designs generated by the contractor. The base bid would remain a four span continuous Bulb-T concept, but entertain contractor alternatives for modifications to the foundation type and pier design. The alignment, profile, span lengths, and pier locations would be fixed.

Advantages:

- Improves competition since some contractors may prefer different types of construction
- May allow for more local materials on the job

Disadvantages:

- Requires the contractor assume design liability for those items which are modified
- Permitting would need to account for minor changes to the design

Discussion: Bidding competition is enhanced by allowing alternatives from contractors who may have specific experience or equipment. Managing the potential range of solutions received with the bids requires careful preplanning and listing of acceptable and unacceptable solutions for the project. To prevent the range of bid alternatives from becoming too broad, the fixed items such as alignment, profile, span lengths, number and location of piers, etc. would need to be clearly stated along with a list of items open to bid alternatives, i.e. foundation type, pier design, girder/deck design.

Bid alternates are a proven method of controlling the possible range of solutions for a project while reaping the benefits of the contractors experience and optimization of his means, methods, and equipment availability. The key is limiting the allowable alternatives to a select group of features while providing clear performance based specifications for each of the alternatives.

Care would be needed in the development of the specifications to clearly define the allowable areas for alternates, method of submittals, approval process, payment terms, professional engineering liability issues, and project schedule implications.

The permitting activity needs to consider how a design alternative would impact the environmental process and would need clear boundaries to prevent disputes from arising during the bidding process.

VE ALTERNATIVE CM-2.0

Allow a base bid bridge design (Alternate B) with allowable design bid options by the contractor

Interaction with stakeholders such as the COE may require additional time to analyze the impacts and mitigation measures needed for alternative designs, but specific limitations would be needed so that permitting will not be affected. It is assumed that the profile and alignment would be fixed and that alternatives would only be entertained for the girder/deck design, foundations, and pier design. Other risks associated with this approach would be the added design efforts required to review the alternatives following receipt of the bids. If steel members are not desired or preferred due to future maintenance implications, the specifications for the alternatives should clearly state these issues. Careful delineation of acceptable and unacceptable alternatives will be needed. This approach is intended to incorporate some of the benefits of the design build process without causing major disruptions to the current project management plan.

VE ALTERNATIVE CM-2.0

Allow a base bid bridge design (Alternate B) with allowable design bid options by the contractor

Baseline Concept Sketches

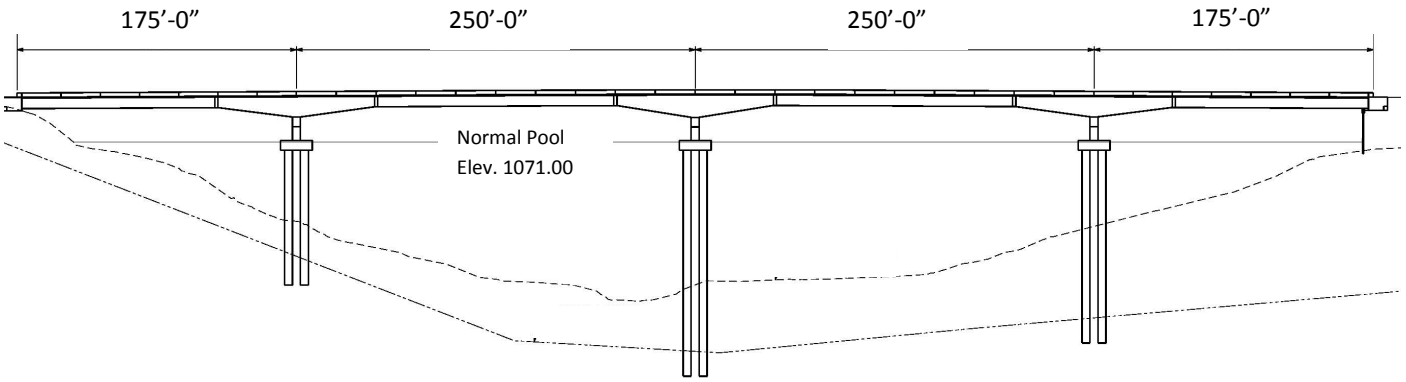

PROFILE (Alternate B – Continuous Bulb-T)

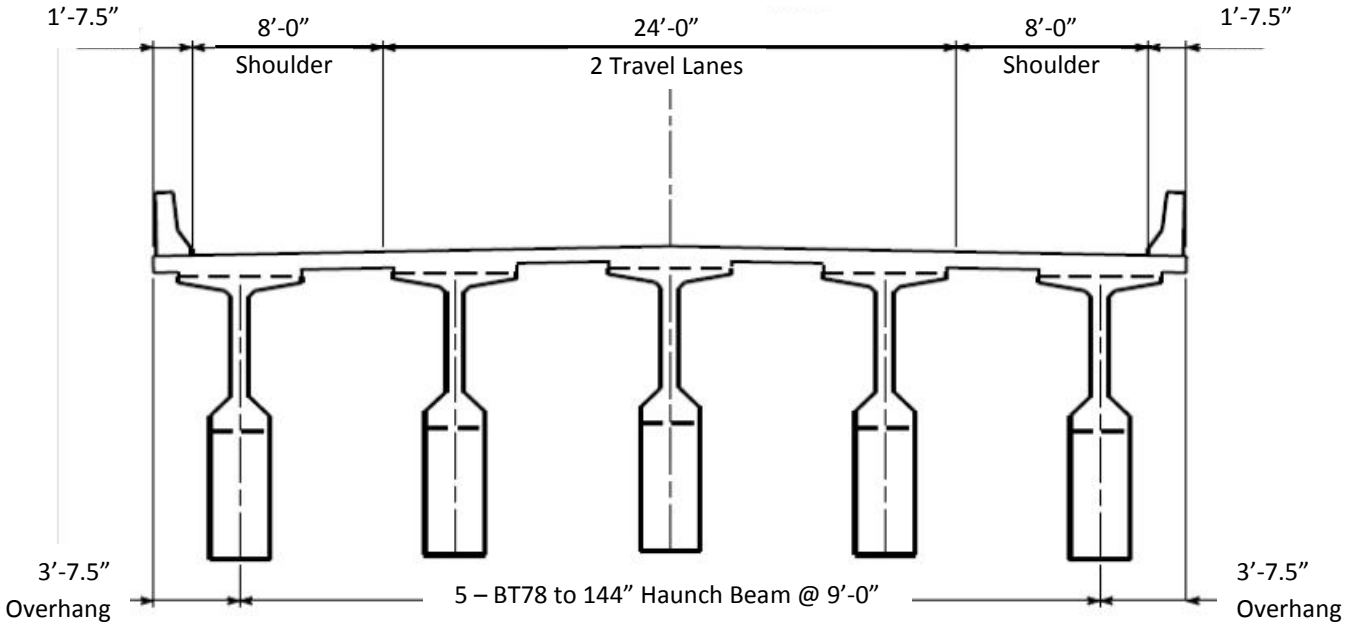

SECTION (Alternate B)

VE ALTERNATIVE CM-2.0

Allow a base bid bridge design (Alternate B) with allowable design bid options by the contractor

Alternative Concept Sketch

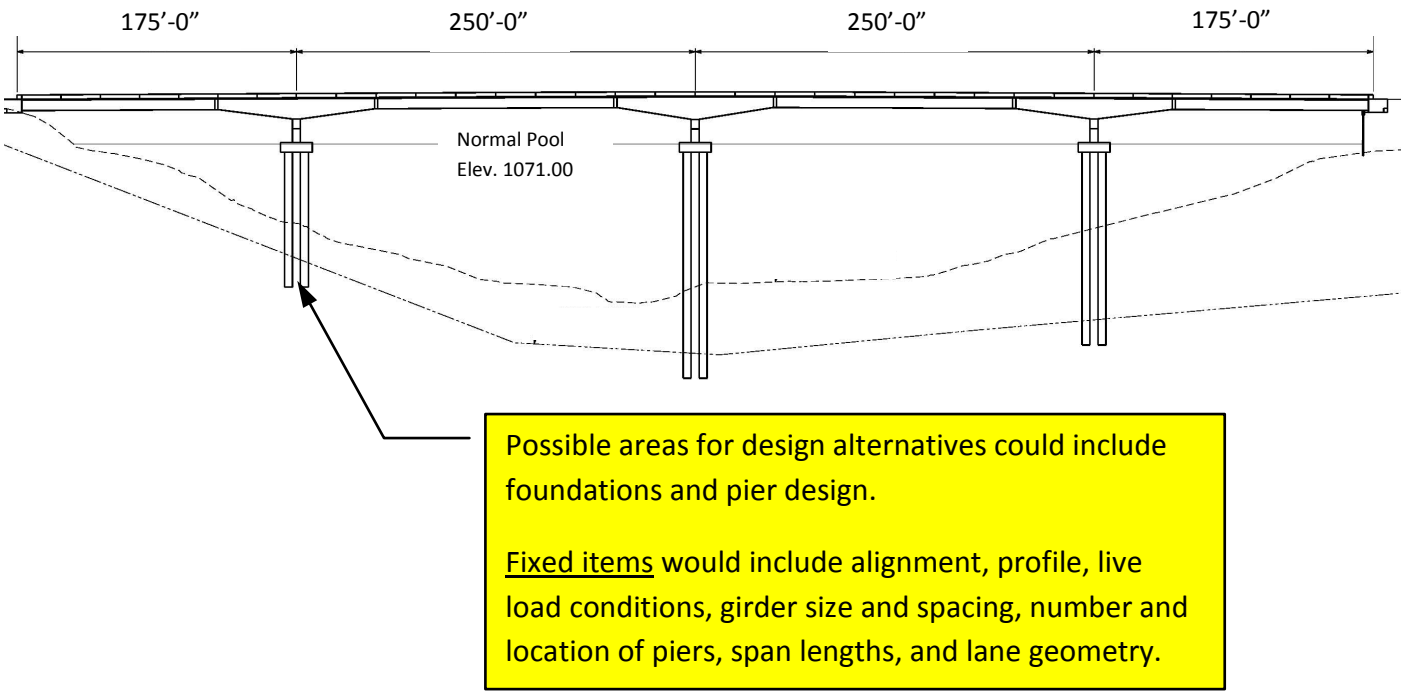

Assumptions and Calculations: It is assumed that bidding a base bid design with possible design alternates generated by the contractors will attract a broader range of contractors and improve the overall competition on the project. Conceptually, this approach is similar to a Design/Build contract, but limited only to the foundation design. Contractors which normally bid on more complex bridge structures will be competing with contractors who may typically build simple span type concrete bridges, thus optimizing competition. Estimating the impact of this change in procurement is difficult, but it assumes a net savings to GDOT in the range of 5% of the total cost of construction.

Initial Cost Estimate

CONSTRUCTION ELEMENT		*BASELINE CONCEPT*			*ALTERNATIVE CONCEPT*		
Description	**Unit**	**Qty**	**Cost/Unit**	**Total**	**Qty**	**Cost/Unit**	**Total**
Alternate B - Continuous Bulb - T	LS	1		$ 4,900,000			$ -
				$ -			$ -
Alternative B with bid alternatives	LS			$ -	1	$ 4,655,000	$ 4,655,000
(Assume a 5% reduction in cost)				$ -			$ -
				$ -			$ -
SUB-TOTAL				$4,900,000			$4,655,000
PROJECT MARK-UPS				$0			$0
TOTAL (Rounded)				$4,900,000			$4,655,000
						SAVINGS	**$245,000**

VE ALTERNATIVE CM-2.1

Develop a base bid bridge design (Alternate B) with 2 to 3 foundation bid options

Initial Cost Savings: $98,000
LCC Savings: $0
Change in Schedule: No Change

Description of Baseline Concept: The current project delivery approach uses Alternate B, with 78-inch Florida Spliced Continuous Bulb-T Concrete Girders for the bridge, and spans consisting of 175 feet, 250 feet, 250 feet and 175 feet. The design will be bid along with the roadway approaches as a single lump sum contract. The base bid will include a single solution for the foundation design.

Description of Alternative Concept: This alternative proposes to modify the project design approach to include two or three design options for the structure foundations. The base bid would remain a four span continuous Bulb-T concept, but include up to three options for the foundation design. The base bid for the project could include drilled caissons, with options for spread footings, and braced concrete caissons. Project award would be for the lowest total cost for the base bid plus the foundation option. The design team would prepare full designs for each foundation bid option. The bid form would be modified to show a Base Bid price for the roadwork and bridge superstructure, plus prices for each of the two or three foundation options. The bidder with the lowest combined price for the Base Bid plus one foundation option would be awarded the contract.

Advantages:

- Improves competition since some contractors may prefer different types of construction
- May allow better utilization of contractors experience and equipment

Disadvantages:

- Requires the design team to present several fully designed foundation options

Discussion: Bidding competition is enhanced by allowing prices from contractors who may have specific experience or equipment. Managing the potential range of base bid and foundation options requires careful preplanning and some customization in the bid form.

Bid options are a proven method of controlling the possible range of solutions for a project while reaping the benefits of the contractors experience and optimization of his means, methods, and equipment availability. Under this alternative, the contractor would not be responsible for any design efforts, but must bid on the project base bid plus each of the foundation options.

The permitting activity needs to consider how the foundation options would impact the environmental process and would need clear boundaries to prevent disputes from arising during the bidding process.

Interaction with stakeholders such as the COE may require additional time to analyze the impacts and mitigation measures needed for differing foundation options, but specific limitations would be needed so that permitting will not be affected. It is assumed that the profile and alignment would be fixed and that the foundation options would not alter the girder/deck design. Other risks associated with this approach would be the added design efforts required to develop the foundation bid options.

VE ALTERNATIVE CM-2.1

Develop a base bid bridge design (Alternate B) with 2 to 3 foundation bid options

Baseline Concept Sketches

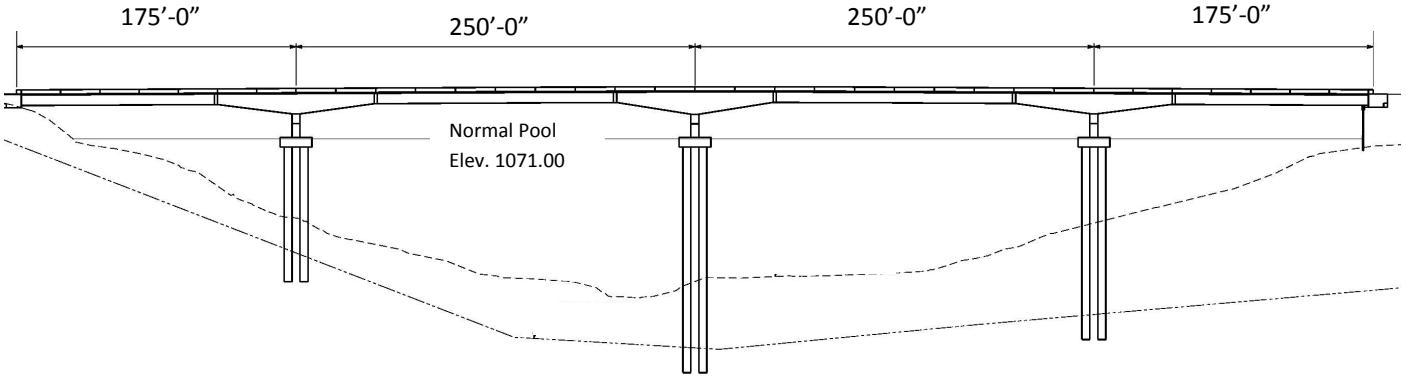

PROFILE (Alternate B – Continuous Bulb-T)

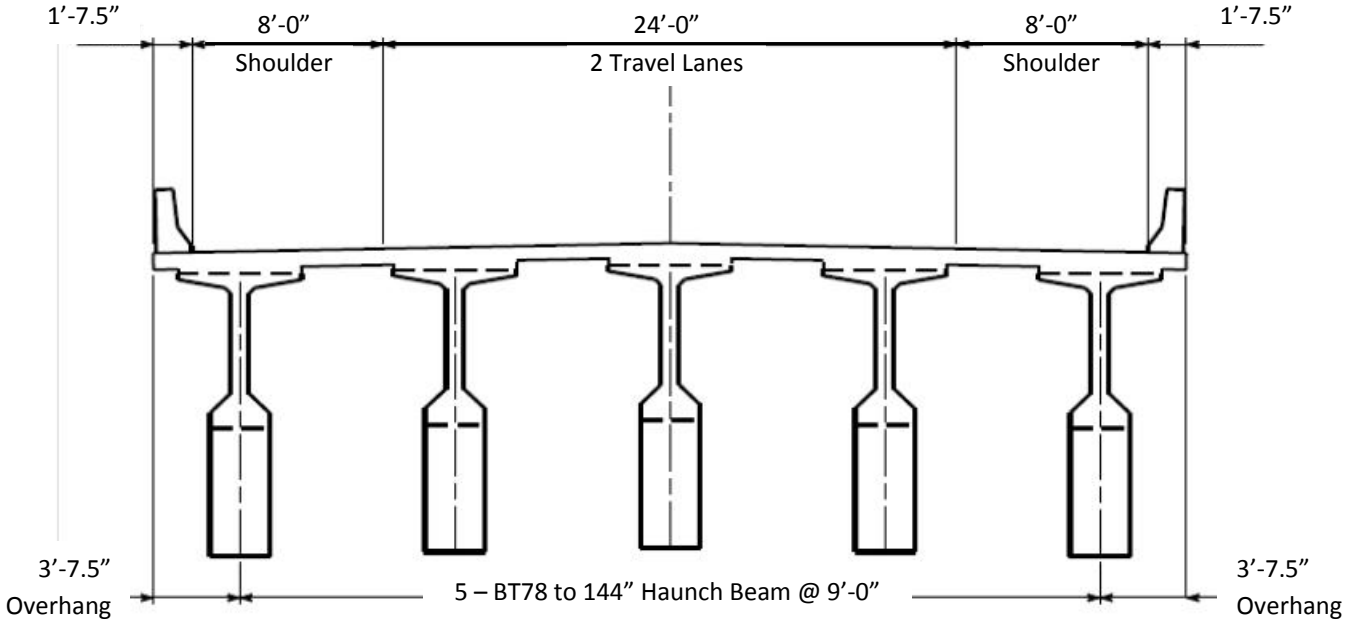

SECTION (Alternate B)

VE ALTERNATIVE CM-2.1

Develop a base bid bridge design (Alternate B) with 2 to 3 foundation bid options

Alternative Concept Sketch

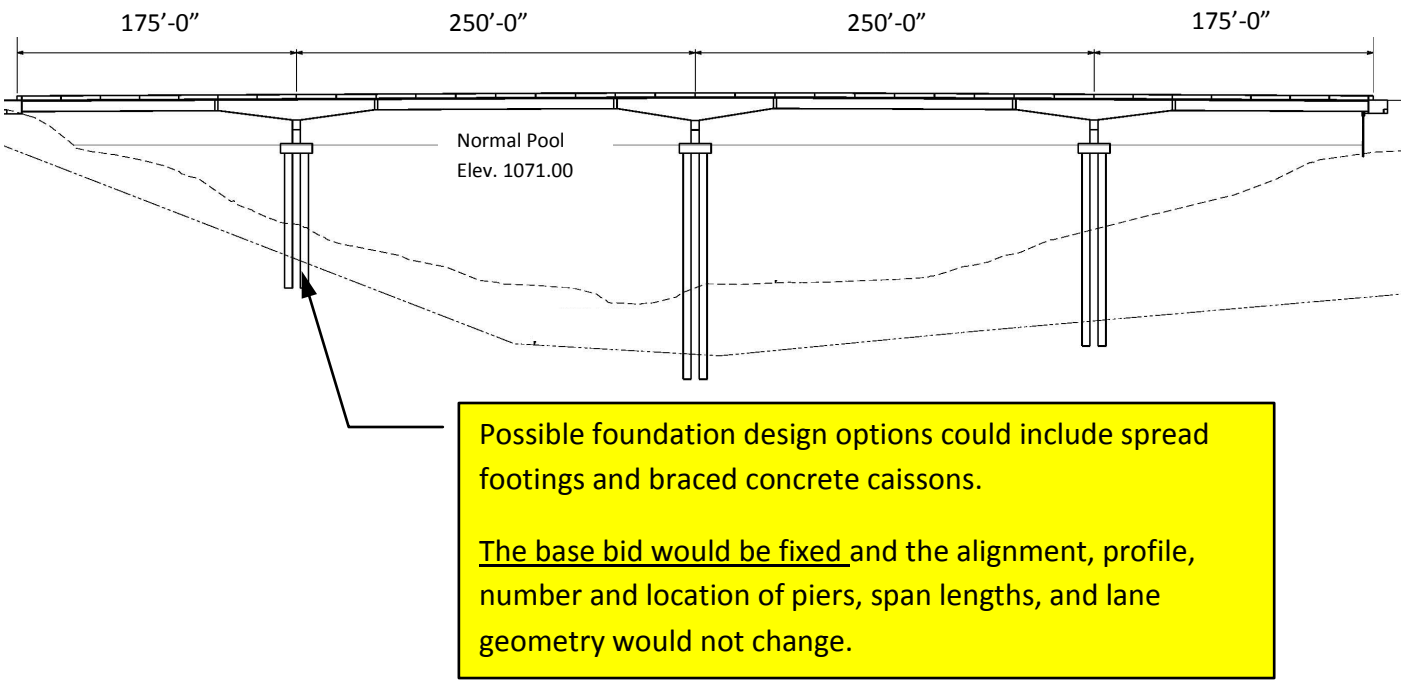

Assumptions and Calculations: It is assumed that bidding a base bid design with possible foundation options will attract a broader range of contractors and improve the overall competition on the project. Contractors who normally bid on more complex bridge structures will be competing with contractors who may typically build simple span type concrete bridges, thus optimizing competition. Estimating the impact of this change in procurement is difficult, but it is assumed that it may result in a net savings to GDOT in the range of 2% of the total cost of construction.

Initial Cost Estimate

CONSTRUCTION ELEMENT		*BASELINE CONCEPT*			*ALTERNATIVE CONCEPT*		
Description	**Unit**	**Qty**	**Cost/Unit**	**Total**	**Qty**	**Cost/Unit**	**Total**
				$ -			
				$ -			$ -
Alternate B - Continuous Bulb - T	LS	1		$ 4,900,000			$ -
				$ -			$ -
Alternative B with bid alternatives	LS			$ -	1	$ 4,802,000	$ 4,802,000
(Assume a 2% reduction in cost)				$ -			$ -
				$ -			$ -
SUB-TOTAL				$4,900,000			$4,802,000
PROJECT MARK-UPS				$0			$0
TOTAL (Rounded)				$4,900,000			$4,802,000
						SAVINGS	**$98,000**

VE ALTERNATIVE P-4.0

Lower the profile on the eastern end of the alignment from STA 32+26.76 to STA 48+30

Initial Cost Savings:	$122,000
LCC Savings:	$0
Change in Schedule:	No Change

Description of Baseline Concept: The crest curve on the proposed bridge, at STA 32+26.76, has a forward grade of -0.538% with very high MSE walls beginning at the end of the bridge. The PVI is located at STA 42+00 with a forward grade of +2.22%.

Description of Alternative Concept: This alternative would lower the forward grade to -1.00% from STA 32+26.76 to STA 42+00, then +2.94% from STA 42+00 to STA 48+30. This will lower the profile grade a maximum of 4 feet, reduce the height of the MSE walls, and reduce the amount of fill needed.

Advantages:

- Reduces wall height
- Reduces amount of imported fill material

Disadvantages:

- Will increase Maintenance of Traffic requirements at the crest curve located at the east end project as well as minor undercut of the existing roadway

Discussion: The profile from STA 32+26.76 can be lowered to reduce the amount of MSE wall needed and the amount of borrow material required. This will not affect environmental or schedule concerns but will reduce the SF of MSE wall needed and thereby reduce construction costs. Some minor schedule savings in trucking time for the imported material should be anticipated, but the schedule will not be significantly impacted.

VE ALTERNATIVE P-4.0

Lower the profile on the eastern end of the alignment from STA 32+26.76 to STA 48+30

Baseline Concept Sketches

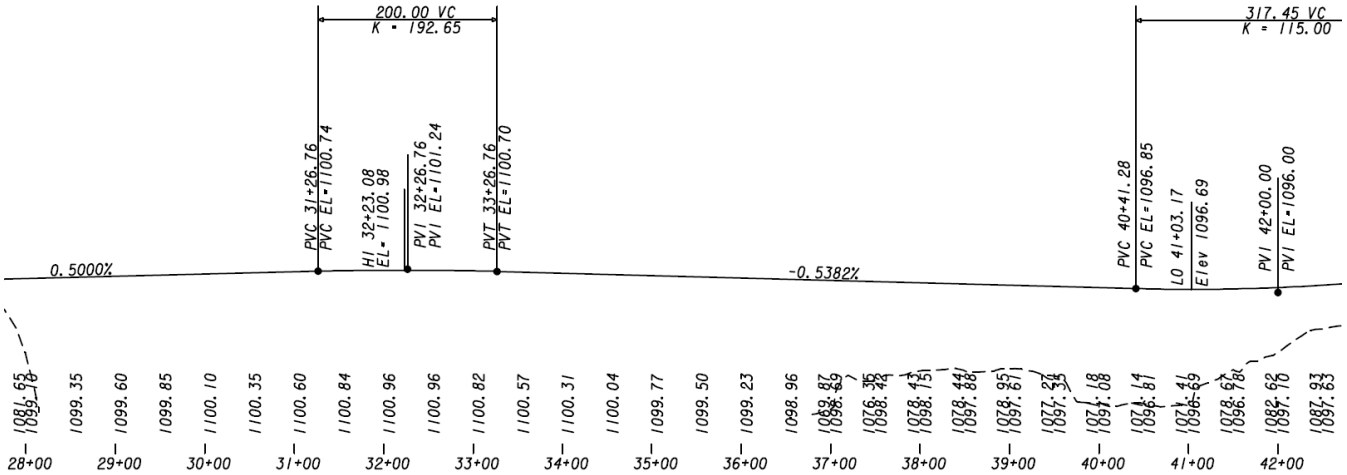

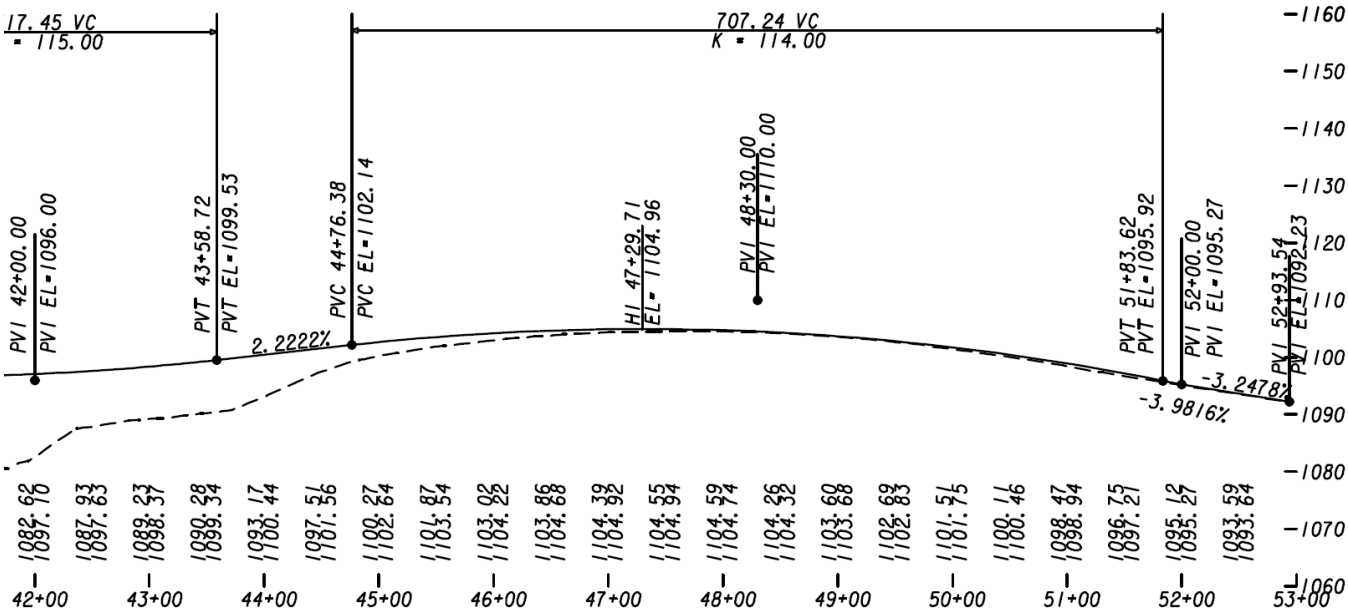

VE ALTERNATIVE P-4.0

Lower the profile on the eastern end of the alignment from STA 32+26.76 to STA 48+30

Alternative Concept Sketches

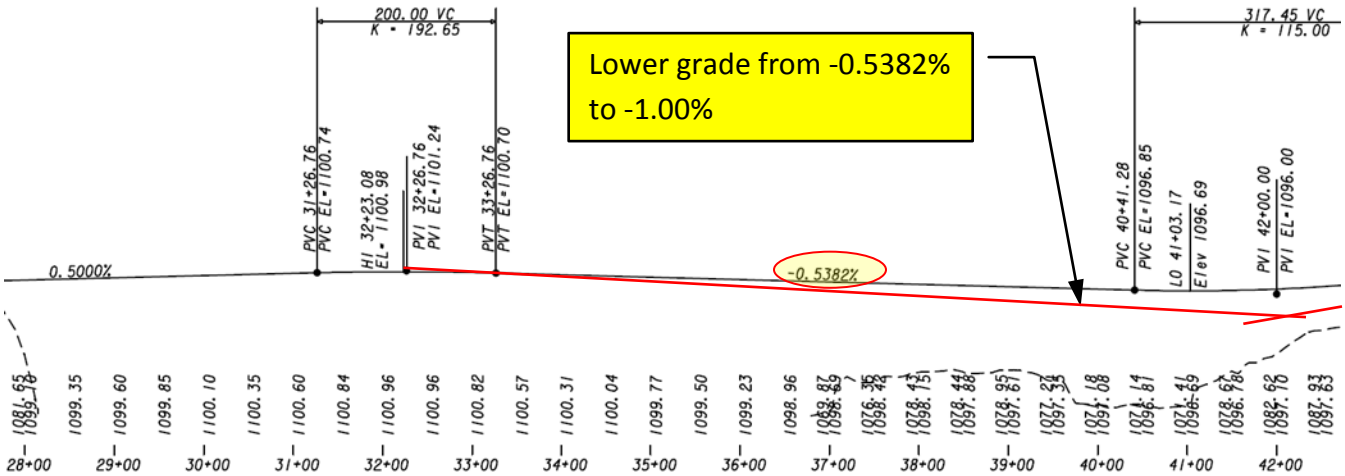

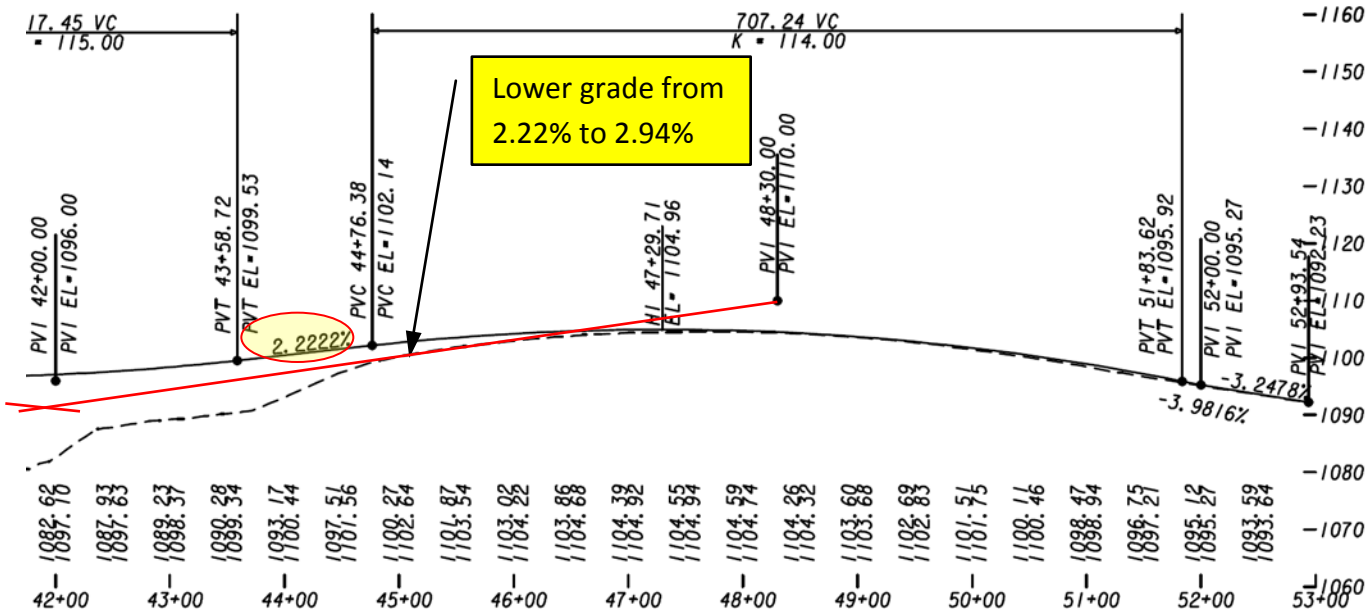

VE ALTERNATIVE P-4.0

Lower the profile on the eastern end of the alignment from STA 32+26.76 to STA 48+30

Initial Cost Estimate

CONSTRUCTION ELEMENT		*BASELINE CONCEPT*			*ALTERNATIVE CONCEPT*		
Description	**Unit**	**Qty**	**Cost/Unit**	**Total**	**Qty**	**Cost/Unit**	**Total**
MSE Wall	SF	3,800	$ 50.00	$ 190,000			
Earthwork (Borrow)	CY	1,675	$ 4	$ 6,700			$ -
Additional MOT	LS			$ -	1	$ 75,000.00	$ 75,000
				$ -			$ -
				$ -			$ -
SUB-TOTAL				$196,700			$75,000
PROJECT MARK-UPS				$0			$0
TOTAL (Rounded)				$197,000			$75,000
						SAVINGS	**$122,000**

VE ALTERNATIVE W-1.0

Lengthen the bridge by 622 feet and replace MSE walls/embankment with structure

Initial Cost Savings: ($876,000)
LCC Savings: $0
Change in Schedule: No Change

Description of Baseline Concept: The current design proposes an 850-foot bridge from Station 27+78 to 36+28 and the use of MSE walls from Station 36+28 to 43+50 (left) and Station 36+28 to 41+50 (right) with average heights of 26 feet and 17 feet, respectively.

Description of Alternative Concept: The alternative concept proposes to extend the bridge structure by constructing approach spans to the east of the bridge utilizing simple spans supported on pile bents. The 622-foot extension would be from the current terminus at Station 36+28 to Station 42+50. MSE wall would be utilized from Station 42+50 to Station 43+50 (left only).

Advantages:

- Reduces impact to the normal pool lake volume, thus reducing the need for compensatory mitigation
- Reduces impact to the flood pool capacity, thus reducing the need to replace equivalent volumes
- Less embankment would need to be trucked in to complete the MSE wall construction
- Less MSE wall to construct, maintain and inspect; especially within the areas where the wall foundation is below the normal pool elevation

Disadvantages:

- Increased amount of structure to construct, maintain and inspect

Discussion: According to Meeting Notes for the September 15, 2011 meeting between GDOT, LPA/Baker, and USACE the "fill on the east approach is the largest concern" to the USACE. The discussion continued to note that fill placed below the 1,071-foot elevation (normal pool) and between the 1,071-foot and 1,085-foot elevation (flood pool capacity) are "major issues that need to be addressed." Based on this information, the VE team suggests utilizing additional lengths of structure in order to reduce the amount of fill impact to these critical lake volumes. By utilizing simple spans supported on pile bents for 622 feet, the foot print of the roadway would be reduced and the impacts to normal pool and flood capacity volume could be reduced. Although it is not included in the cost calculations, it should be noted that the right-of-way requirements could be reduced by approximately 50% (a cost savings of $893,000) thus bringing the Initial Cost Savings of this alternative to $17,000. Since it was stated in the project information meeting that it was already the intention to reduce the right-of-way quantity this alternative does not include the savings in its estimate.

There are no known impacts or benefits to schedule. There would be a reduction in earthwork needs for MSE wall construction; therefore there would be a reduction in truck hauling traffic. However, the longer bridge may offset this reduction in earthwork and MSE wall construction.

It does not appear that the full cost for mitigating wetland impacts or lake volume impacts is known at this time and some cost risk is apparent. It appears there is an opportunity to reduce these

impacts and thus reduce the cost of mitigating the impacts and reduce the environmental risk to the project. This alternative suggests monitoring these risks carefully as the permitting process evolves and consider some lengthening of the structure to proportionately reduce the cost of environmental mitigation.

VE ALTERNATIVE W-1.0

Lengthen the bridge by 622 feet and replace MSE walls/embankment with structure

Baseline Concept Sketches

State Route Number: 53

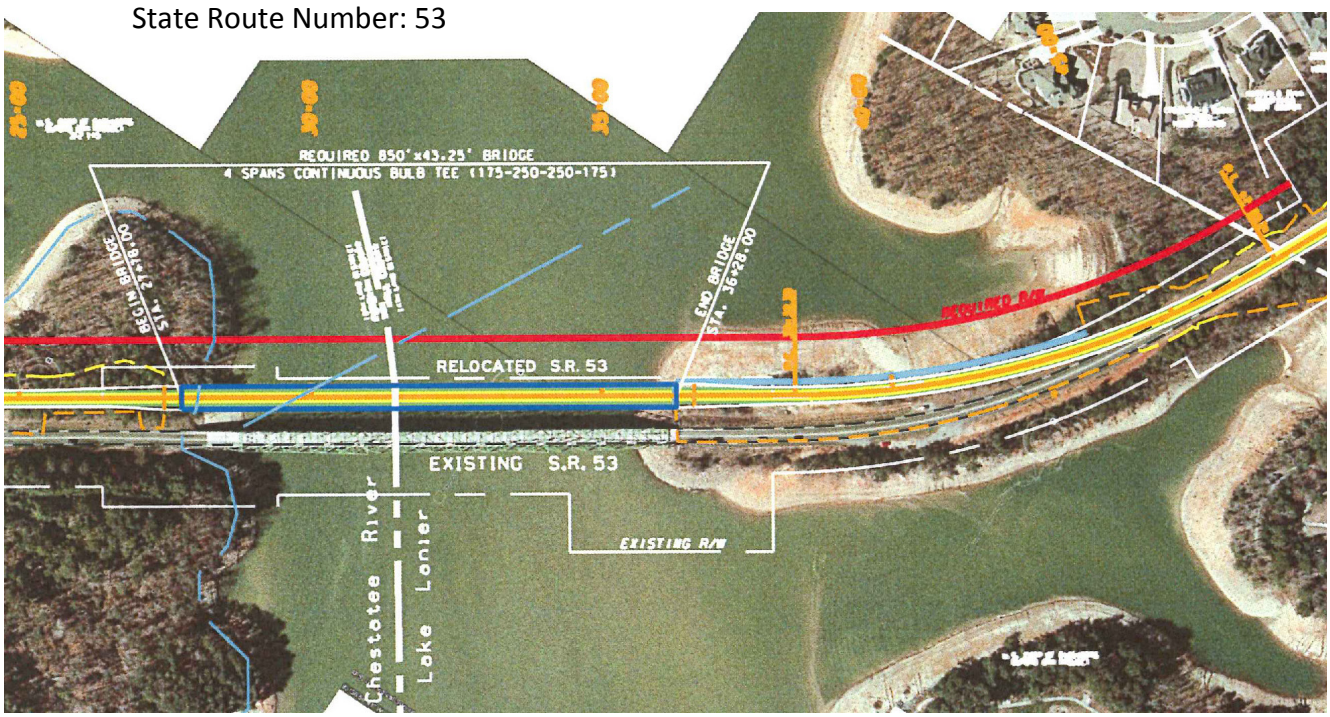

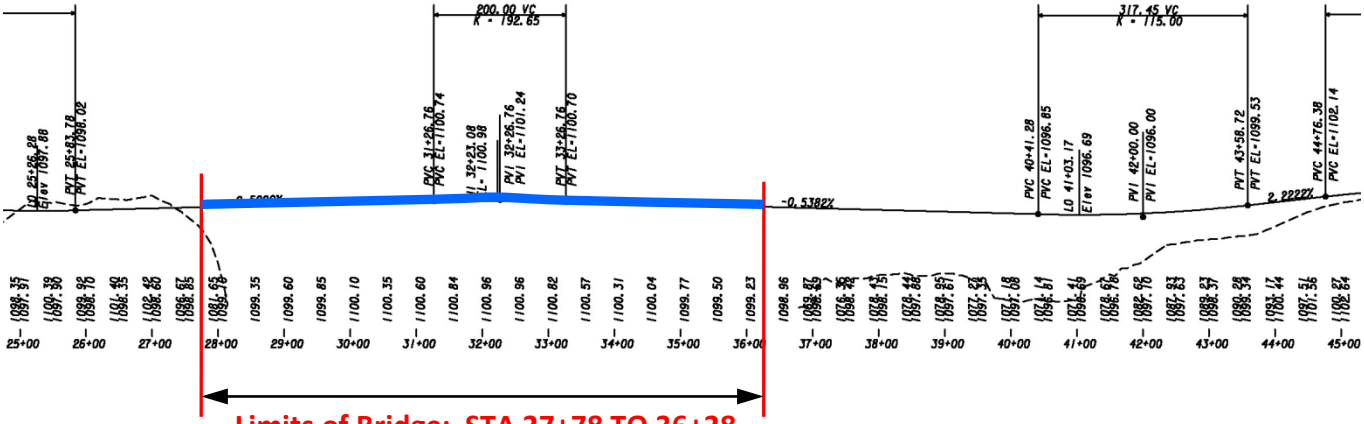

Limits of Bridge: STA 27+78 TO 36+28 (850FT)

VE ALTERNATIVE W-1.0

Lengthen the bridge by 622 feet and replace MSE walls/embankment with structure

Alternative Concept Sketches

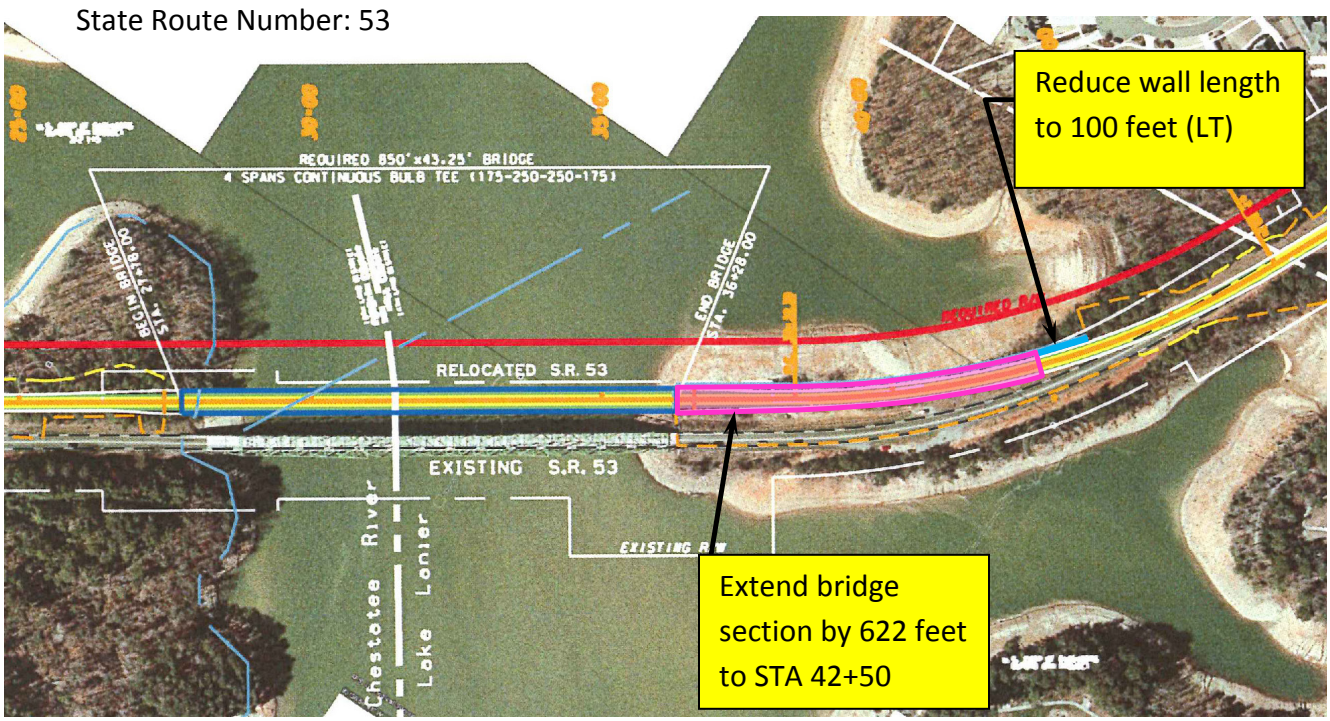

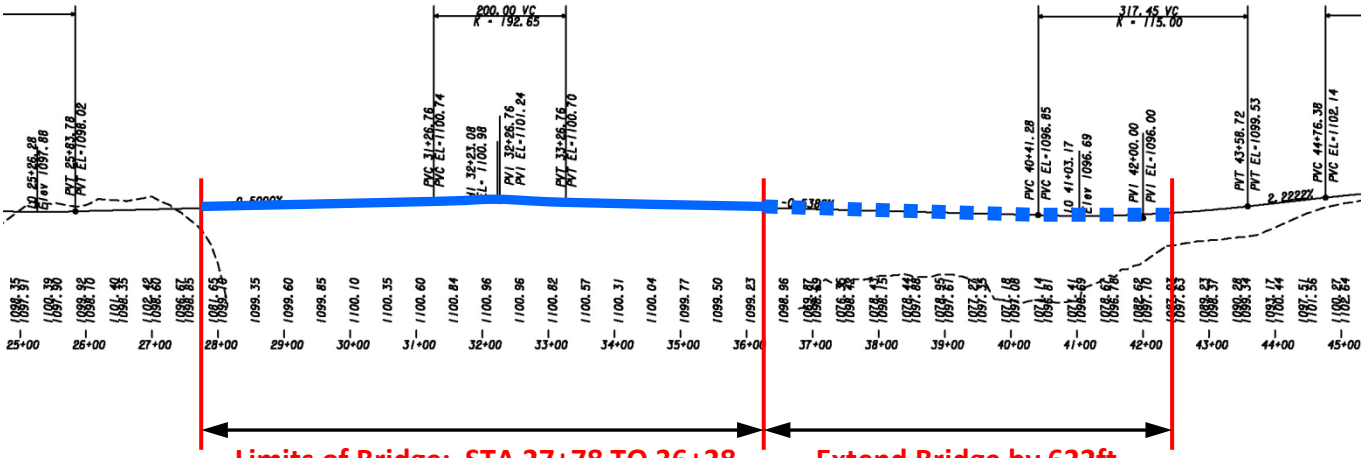

VE ALTERNATIVE W-1.0

Lengthen the bridge by 622 feet and replace MSE walls/embankment with structure

Assumptions and Calculations:

Baseline design

Bridge: Station 27+78 to 36+28 = 850 feet long; 43.25 feet wide; 36,762.5 sf

Walls: east of bridge; according to 'cross sections ve.pdf'
LT: Station 36+28 to 43+50 = 722 feet long; 17 to 35 feet high (average 26 feet); 18,722 sf
RT: Station 36+28 to 41+50 = 522 feet long; 14 to 20 feet high (average 17 feet); 8,874 sf
Total: 27,646 sf. *Note conceptual cost estimate included a quantity of 24,000 sf for this wall. This 24,000 sf value has been used for purposes of this study.*

Asphalt: 4555.833 TN from conceptual cost estimate
Station 11+00 to 27+78 and 36+58 to 50+00 = 2990 lf of roadway
1.524 TN/lf of roadway

Base: 7620.501 TN from conceptual cost estimate
Station 11+00 to 27+48 and 36+58 to 50+00 = 2990 lf of roadway
2.549 TN/lf of roadway

Environmental:
Wetlands – 9.12 credits. From Station 38+28 to 43+50 =722 feet. 0.01263 credits/feet
Lake impacts – 51.67 Environmental Exchange Impact units
From Stations 22+00 to 24+00 and 38+28 to 43+50; 922 feet; 0.05604 EEI/feet

Alternate design

Additional Bridge: Station 36+28 to 42+50 = 622 feet additional length; 43.25 feet wide; 26,901.5 sf

Walls:
LT: Station 42+50 to 43+50 = 100 feet long; 17 to 23 feet high (average 20 feet); 2,000 sf
Bridge: 43.25 feet long; 10 to 23 feet high (average 16.5 feet); 713.6 sf
Total: 2,713.6 sf

Asphalt: 1.524 TN/lf of roadway
Station 11+00 to 27+48 and 42+80 to 50+00; 2,368 lf
At 1.524 TN/lf = 3,608.10 TN

Base: 2.549 TN/lf of roadway
Station 11+00 to 27+48 and 42+80 to 50+00; 2,368 lf
At 2.549 TN/lf = 6,035.2 TN

Environmental:
Wetlands – Station 42+50 to 43+50; 100 feet; 1.26 credits
Lake impacts – Stations 22+00 to 24+00 and 42+50 to 43+50; 300 feet; 16.81 EEI

VE ALTERNATIVE W-1.0

Lengthen the bridge by 622 feet and replace MSE walls/embankment with structure

Initial Cost Estimate

CONSTRUCTION ELEMENT		*BASELINE CONCEPT*			*ALTERNATIVE CONCEPT*		
Description	**Unit**	**Qty**	**Cost/Unit**	**Total**	**Qty**	**Cost/Unit**	**Total**
				$ -			
Structures (Cont. Bulb Tee Girder)	SF	36,763	$ 150	$ 5,514,375	36,762.5	$ 150	$ 5,514,375
Sturures (Simple Spans)	SF	0	$ 95	$ -	26,901.5	$ 85.00	$ 2,286,628
Walls	SF	24,000	$ 50	$ 1,200,000	2,713.6	$ 50	$ 135,681
				$ -			$ -
Asphalt	TN	4,556	$ 64	$ 292,798	3,608.1	$ 64	$ 231,888
Base	TN	7,621	$ 45	$ 340,363	6,035.2	$ 46	$ 275,594
				$ -			$ -
Wetland Mitigation	Credits	9	$ 17,000	$ 155,040	1.26	$ 17,000	$ 21,474
Lake Impacts	EEI*	52	$ 2,500	$ 129,175	16.81	$ 2,500	$ 42,031
				$ -			$ -
* EEI = Environmental Exchange Impact				$ -			$ -
				$ -			$ -
SUB-TOTAL				$7,631,751			$8,507,670
PROJECT MARK-UPS				$0			$0
TOTAL (Rounded)				$7,632,000			$8,508,000
						SAVINGS	**($876,000)**

VE ALTERNATIVE W-1.1

Lengthen the bridge by 522 feet and replace MSE walls/embankment with structure

Initial Cost Savings: ($665,000)
LCC Savings: $0
Change in Schedule: No Change

Description of Baseline Concept: The current design proposes an 850-foot bridge from Station 27+78 to 36+28 and the use of MSE walls from Station 36+28 to 43+50 (left) and Station 36+28 to 41+50 (right) with average heights of 26 feet and 17 feet, respectively.

Description of Alternative Concept: The Alternative Concept proposes to extend the bridge structure by constructing approach spans to the east of the bridge utilizing simple spans supported on pile bents. The 522-foot extension would be from the current terminus at Station 36+28 to Station 41+50 to the point at which the cross sections indicate that the base of the MSE wall is above the normal pool elevation of 1,071 feet. MSE wall would be utilized from Station 41+50 to Station 43+50 (left only).

Advantages:

- Reduces impact to the normal pool lake volume, thus reducing the need for compensatory mitigation
- Reduces impact to the flood pool capacity, thus reducing the need to replace equivalent volumes
- Less earthwork would need to be trucked in to complete the MSE wall construction
- Less MSE wall to construct, maintain and inspect; especially within the area between Stations 36+28 and 37+75 where the wall foundation is below the normal pool elevation

Disadvantages:

- Increases amount of structure to construct, maintain and inspect

Discussion: According to Meeting Notes for the September 15, 2011 meeting between GDOT, LPA/Baker, and USACE the "fill on the east approach is the largest concern" to the USACE. The discussion continued to note that fill placed below the 1,071-foot elevation (normal pool) and between the 1,071-foot and 1,085-foot elevation (flood pool capacity) are "major issues that need to be addressed." Based on this information, the VE Study Team suggests utilizing additional lengths of structure in order to reduce the amount of fill impact to these critical lake volumes, especially the normal pool volume. By utilizing simple spans supported on pile bents, the foot print of the roadway would be reduced and the impacts to volume below the 1,071-foot elevation could be eliminated. There would still be impacts to the flood pool capacity, but the total impact would be reduced. Although it is not included in the cost calculations, it should be noted that the right-of-way requirements could be reduced by approximately 50% (a cost savings of $ 893,000) thus bringing the Initial Cost Savings of this alternative to $228,000. Since it was stated in the project information meeting that it was already the intention to reduce the right-of-way quantity this alternative does not include the savings in its estimate.

There are no known impacts or benefits to schedule. There would be a reduction in earthwork needs for MSE wall construction; therefore there would be a reduction in truck hauling traffic.

VE ALTERNATIVE W-1.1

Lengthen the bridge by 522 feet and replace MSE walls/embankment with structure

It does not appear that the full cost for mitigating wetland impacts or lake volume impacts is known at this time and some cost risk is apparent. It appears there is an opportunity to reduce these impacts and thus reduce the cost of mitigating the impacts and reduce the environmental risk to the project.

Baseline Concept Sketches

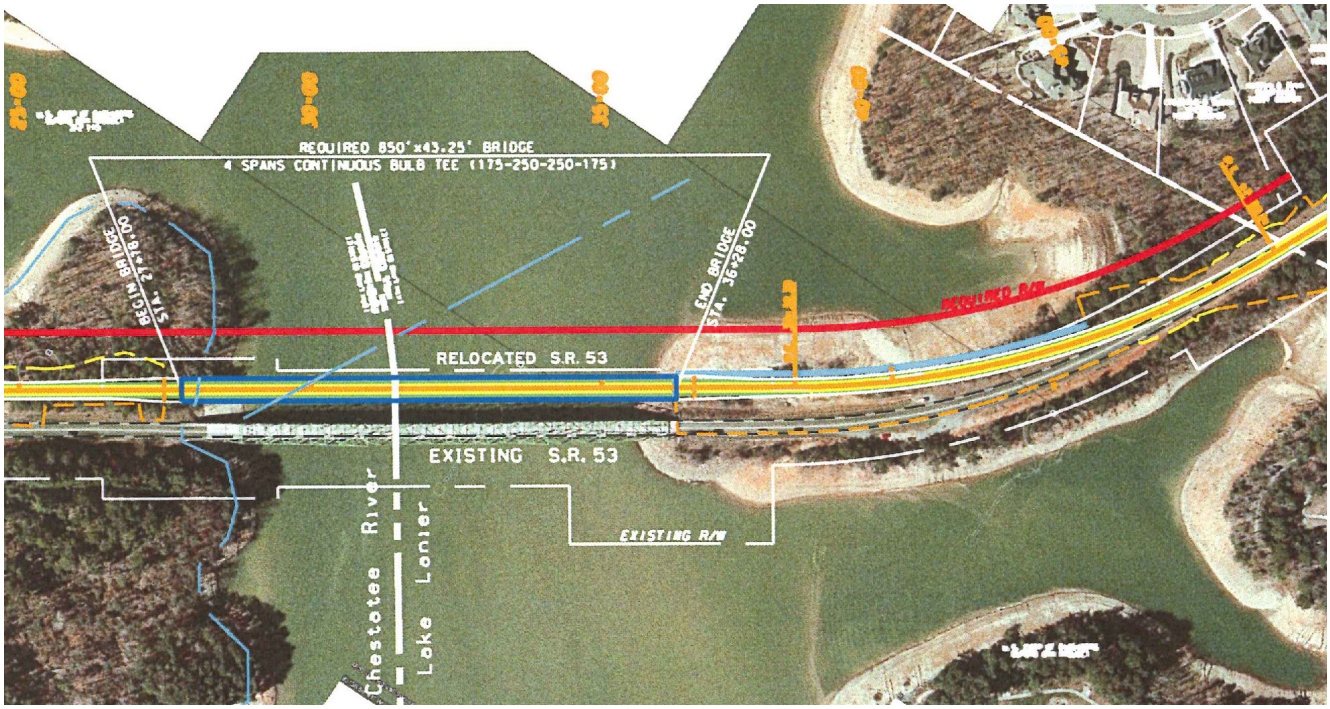

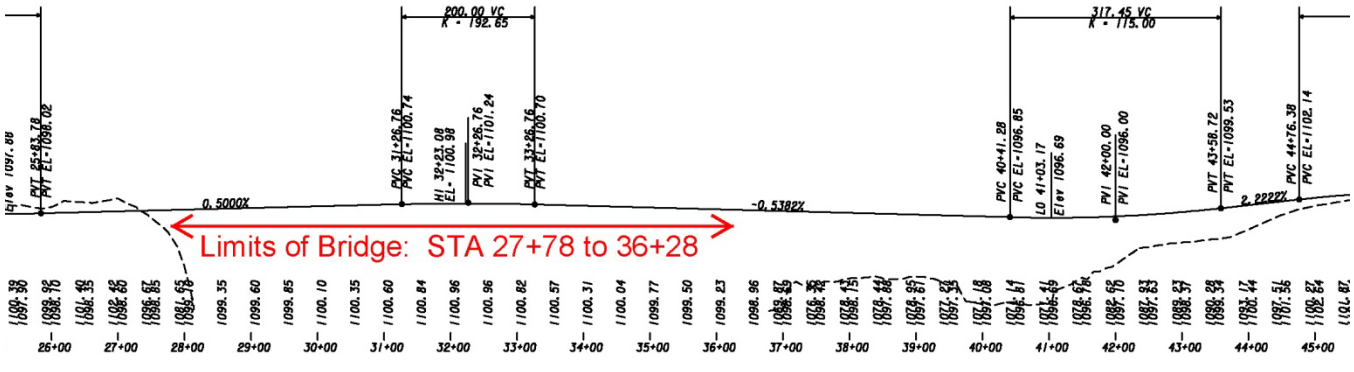

VE ALTERNATIVE W-1.1

Lengthen the bridge by 522 feet and replace MSE walls/embankment with structure

Alternative Concept Sketches

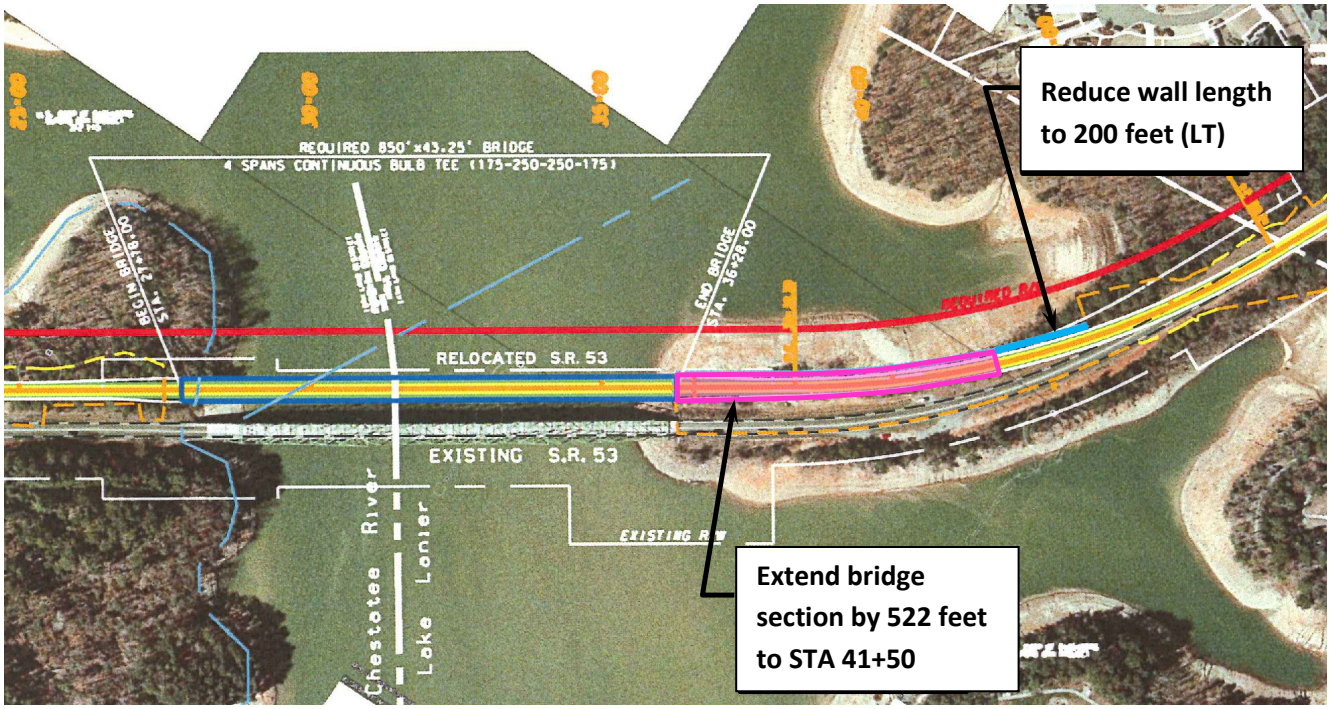

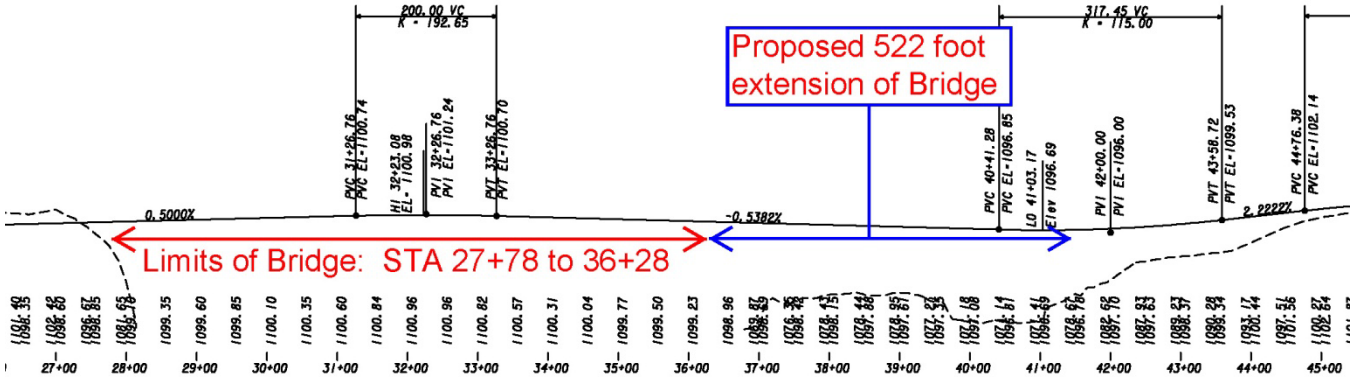

VE ALTERNATIVE W-1.1

Lengthen the bridge by 522 feet and replace MSE walls/embankment with structure

Assumptions and Calculations:

Baseline design

Bridge: Station 27+78 to 36+28 = 850 feet long; 43.25 feet wide; 36,762.5 sf

Walls: east of bridge; according to 'cross sections ve.pdf'
LT: Station 36+28 to 43+50 = 722 feet long; 17 to 35 feet high (average 26 feet); 18,722 sf
RT: Station 36+28 to 41+50 = 522 feet long; 14 to 20 feet high (average 17 feet); 8,874 sf
Total: 27,646 sf. *Note conceptual cost estimate included a quantity of 24,000 sf for this wall. This 24,000 sf value has been used for purposes of this study.*

Asphalt: 4555.833 TN from conceptual cost estimate
Station 11+00 to 27+78 and 36+58 to 50+00 = 2990 lf of roadway
1.524 TN/lf of roadway

Base: 7620.501 TN from conceptual cost estimate
Station 11+00 to 27+48 and 36+58 to 50+00 = 2990 lf of roadway
2.549 TN/lf of roadway

Environmental:
Wetlands – 9.12 credits. From Station 38+28 to 43+50 = 722 feet. 0.01263 credits/feet
Lake impacts – 51.67 Environmental Exchange Impact units
From Stations 22+00 to 24+00 and 38+28 to 43+50; 922 feet; 0.05604 EEI/feet

Alternate design

Additional Bridge: Station 36+28 to 41+50 = 522 feet additional length; 43.25 feet wide; 22,577 sf

Walls:
LT: Station 41+50 to 43+50 = 200 feet long; 17 to 23 feet high (average 20 feet); 4,000 sf
Bridge: 43.25 feet long; 10 to 23 feet high (average 16.5 feet); 713.6 sf
Total: 4,713.6 sf

Asphalt: 1.524 TN/lf of roadway
Station 11+00 to 27+48 and 41+80 to 50+00; 2,468 lf
At 1.524 TN/lf = 3,760.47 TN

Base: 2.549 TN/lf of roadway
Station 11+00 to 27+48 and 41+80 to 50+00; 2,468 lf
At 2.549 TN/lf =6,290.10 TN

Environmental:
Wetlands – Station 41+50 to 43+50; 200 feet; 2.53 credits
Lake impacts – Stations 22+00 to 24+00 and 41+50 to 43+50; 400 feet; 22.42 EEI

VE ALTERNATIVE W-1.1

Lengthen the bridge by 522 feet and replace MSE walls/embankment with structure

Initial Cost Estimate

CONSTRUCTION ELEMENT		*BASELINE CONCEPT*			*ALTERNATIVE CONCEPT*		
Description	**Unit**	**Qty**	**Cost/Unit**	**Total**	**Qty**	**Cost/Unit**	**Total**
				$ -			
Structures (Cont. Bulb Tee Girder)	SF	36,763	$ 150	$ 5,514,375	36,762.5	$ 150	$ 5,514,375
Sturures (Simple Spans)	SF	0	$ 95	$ -	22,576.5	$ 85.00	$ 1,919,003
Walls	SF	24,000	$ 50	$ 1,200,000	4,713.6	$ 50	$ 235,680
				$ -			$ -
Asphalt	TN	4,556	$ 64	$ 292,798	3,760.5	$ 64	$ 241,683
Base	TN	7,621	$ 45	$ 340,363	6,290.1	$ 46	$ 287,232
				$ -			$ -
Wetland Mitigation	Credits	9	$ 17,000	$ 155,040	2.53	$ 17,000	$ 43,010
Lake Impacts	EEI*	52	$ 2,500	$ 129,175	22.42	$ 2,500	$ 56,050
				$ -			$ -
* EEI = Environmental Exchange Impact				$ -			$ -
				$ -			$ -
SUB-TOTAL				$7,631,751			$8,297,033
PROJECT MARK-UPS				$0			$0
TOTAL (Rounded)				$7,632,000			$8,297,000
						SAVINGS	**($665,000)**

VE ALTERNATIVE W-1.2

Lengthen the bridge by 147 feet and replace MSE walls/embankment with structure

Initial Cost Savings: ($273,000)
LCC Savings: $0
Change in Schedule: No Change

Description of Baseline Concept: The current design proposes an 850-foot long bridge from Station 27+78 to 36+28 and uses MSE walls from Station 36+28 to 43+50 (left) and Station 36+28 to 41+50 (right) with average wall heights of 26 feet and 17 feet, respectively.

Description of Alternative Concept: The alternative concept proposes to extend the bridge structure by constructing approach spans to the east of the bridge utilizing simple spans supported on pile bents. The 147-foot extension would be from the current terminus at Station 36+28 to Station 37+75 to the first point at which the cross sections indicate that the base of the MSE wall is above the normal pool elevation of 1,071 feet. Approximately 200 feet up-station, the base of the MSE wall returns to below the normal pool elevation. MSE walls would be utilized from Station 37+75 to Station 43+50 (left) and Station 37+75 to Station 41+50 (right).

Advantages:

- Reduce impact to the normal pool lake volume, thus reducing the need for compensatory mitigation
- Reduce impact to the flood pool capacity, thus reducing the need to replace equivalent volumes
- Less earthwork would need to be trucked in to complete the MSE wall construction
- Less MSE wall to construct, maintain and inspect; especially within the area between Stations 36+28 and 37+75 where the wall foundation is below the normal pool elevation

Disadvantages:

- Longer structure to construct, maintain and inspect

Discussion: According to Meeting Notes for the September 15, 2011 meeting between GDOT, LPA/Baker, and the USACE the fill on the "fill on the east approach is the largest concern" to the USACE. The discussion continued to note that fill placed below the 1,071-foot elevation (normal pool) and between the 1,071-foot and 1,085-foot elevation (flood pool capacity) are "major issues that need to be addressed." Based on this information, the VE team suggests utilizing additional lengths of structure in order to reduce the amount of fill impact to these critical lake volumes. By utilizing simple spans supported on pile bents for 147 feet, the foot print of the roadway would be reduced and the impacts to volume below the 1,071-foot elevation could be reduced. There would still be impacts to the normal and flood pool capacity, but the total impact would be reduced.

If consideration is given to the fact that the cost for mitigating these impacts could double; then this alternative could be a break-even cost value. Although it is not included in the cost calculations, it should be noted that the right-of-way requirements could be reduced by approximately 50% (a cost savings of $893,000) thus bringing this Initial Cost Savings to $620,000 regardless of any increase in environmental mitigation costs. Since it was stated in the project information meeting that it was already the intention to reduce the right-of-way quantity this alternative does not include the savings in its estimate.

VE ALTERNATIVE W-1.2

Lengthen the bridge by 147 feet and replace MSE walls/embankment with structure

There are no known impacts or benefits to schedule. There would be a reduction in earthwork needs for MSE wall construction; therefore there would be a reduction in truck hauling traffic.

It does not appear that the full cost for mitigating wetland impacts or lake volume impacts is known at this time and some potential exists for cost risk and scope creep. It appears there is an opportunity to reduce these impacts and thus reduce the cost of mitigating the impacts and reduce the environmental risk to the project.

Baseline Concept Sketches

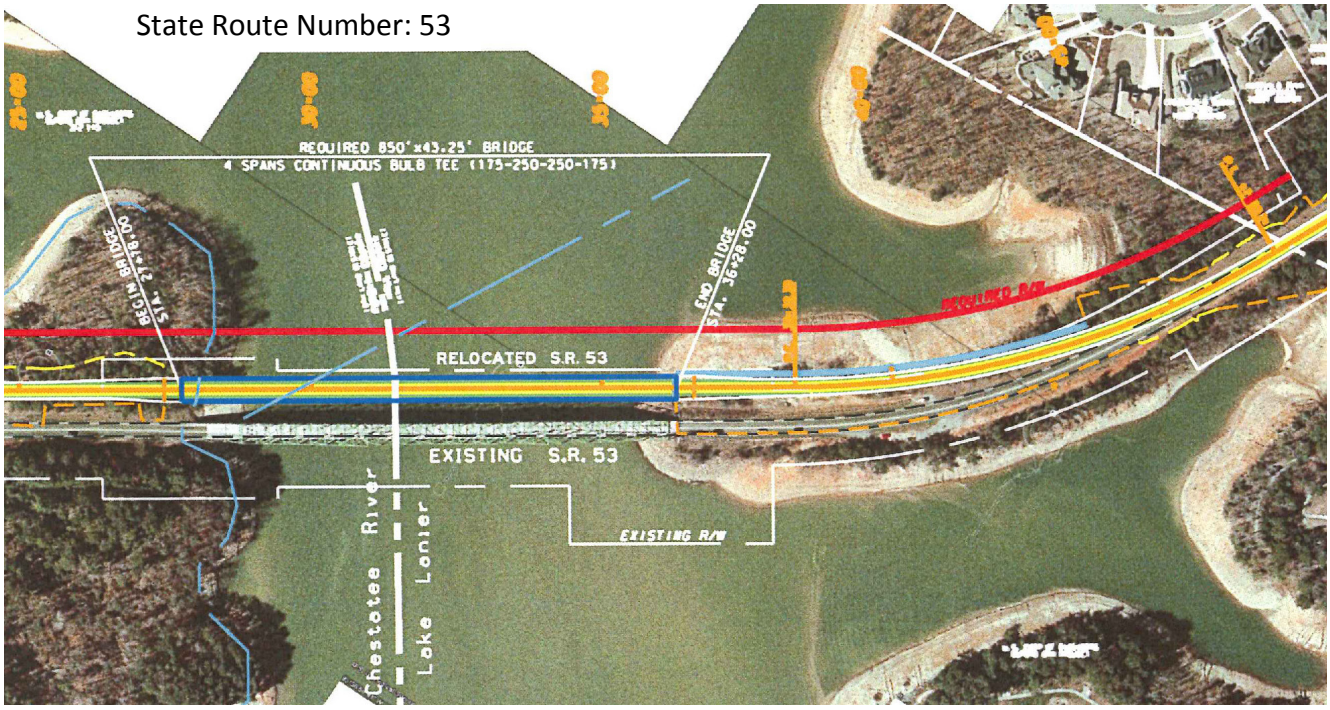

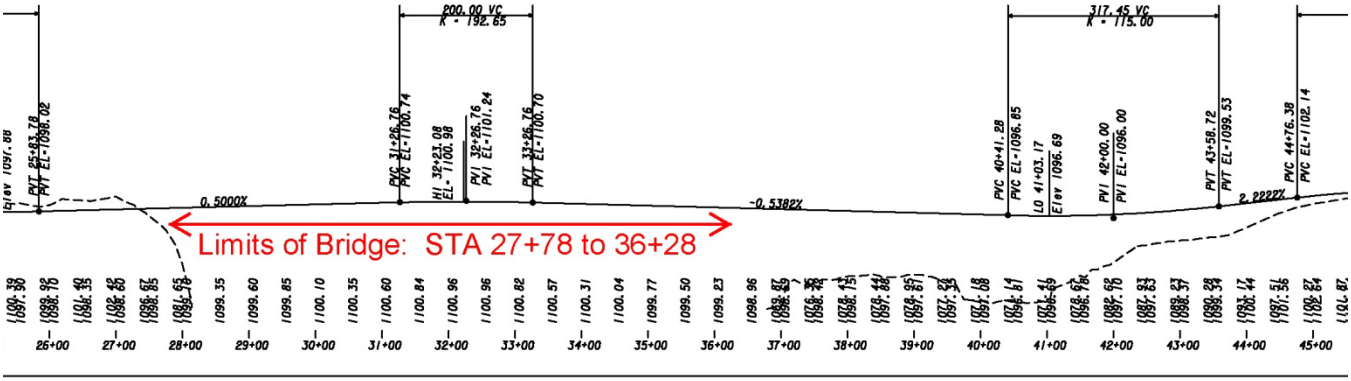

VE ALTERNATIVE W-1.2

Lengthen the bridge by 147 feet and replace MSE walls/embankment with structure

Alternative Concept Sketches

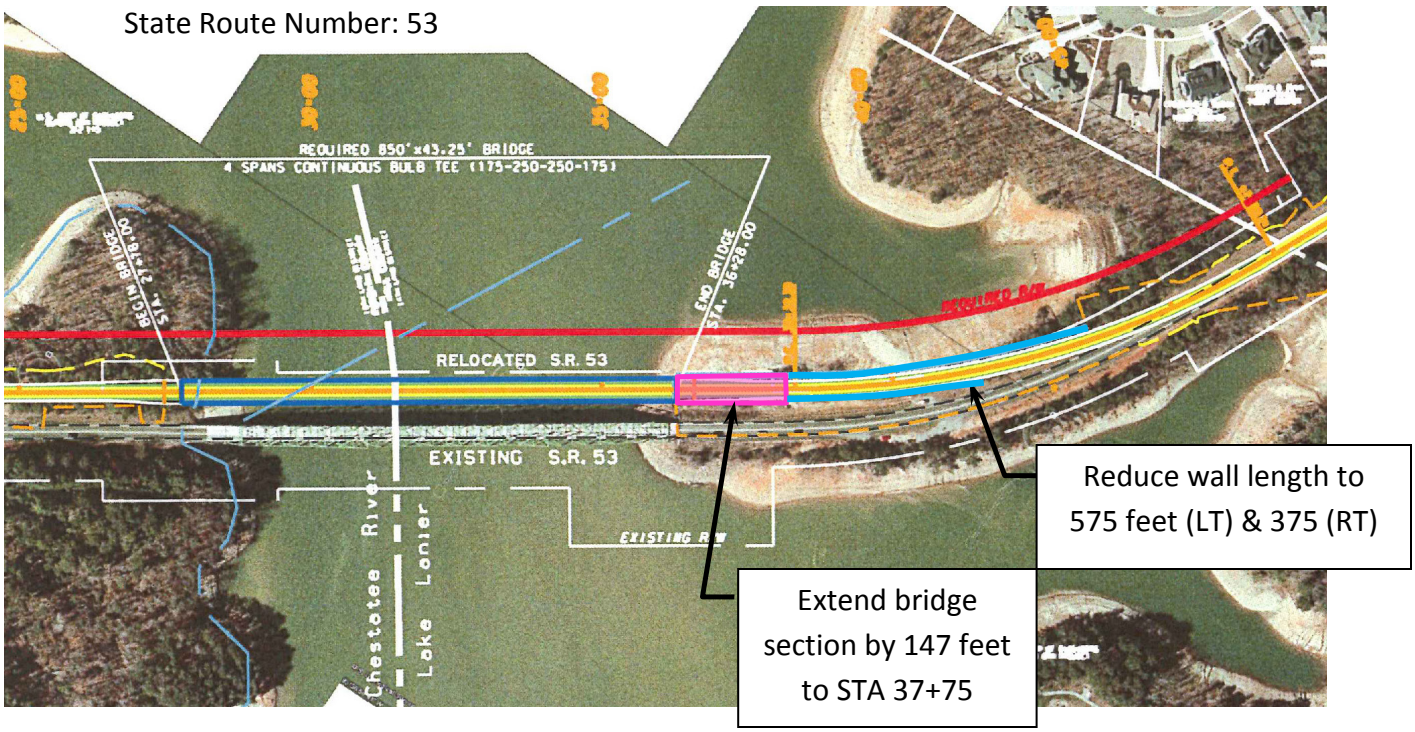

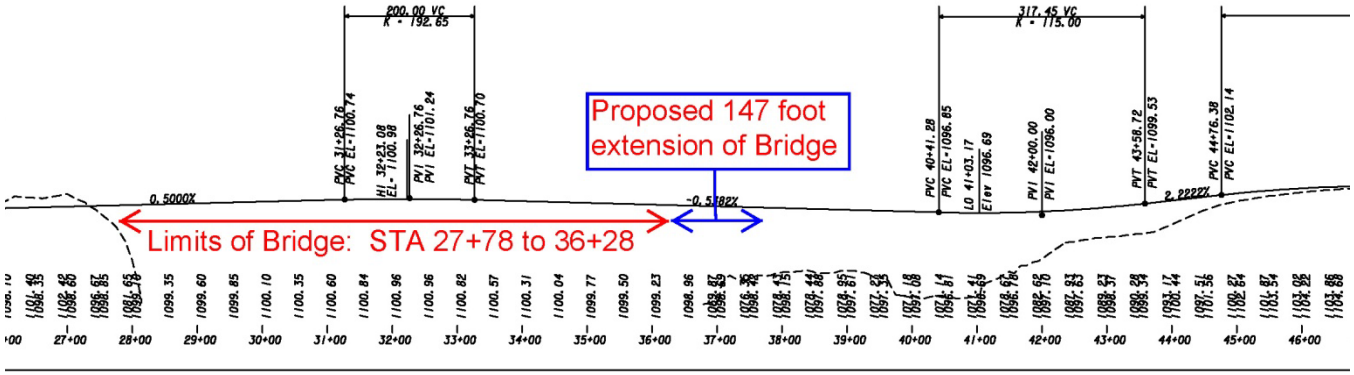

VE ALTERNATIVE W-1.2

Lengthen the bridge by 147 feet and replace MSE walls/embankment with structure

Assumptions and Calculations:

Baseline design

Bridge: Station 27+78 to 36+28 = 850 feet long; 43.25 feet wide; 36,762.5 sf

Walls: east of bridge; according to 'cross sections ve.pdf'
LT: Station 36+28 to 43+50 = 722 feet long; 17 to 35 feet high (average 26 feet); 18,722 sf
RT: Station 36+28 to 41+50 = 522 feet long; 14 to 20 feet high (average 17 feet); 8,874 sf
Total: 27,646 sf. *Note conceptual cost estimate included a quantity of 24,000 sf for this wall. This 24,000 sf value has been used for purposes of this study.*

Asphalt: 4555.833 TN from conceptual cost estimate
Station 11+00 to 27+78 and 36+58 to 50+00 = 2990 lf of roadway
1.524 TN/lf of roadway

Base: 7620.501 TN from conceptual cost estimate
Station 11+00 to 27+48 and 36+58 to 50+00 = 2990 lf of roadway
2.549 TN/lf of roadway

Environmental:
Wetlands – 9.12 credits. From Station 38+28 to 43+50 =722 feet. 0.01263 credits/feet
Lake impacts – 51.67 Environmental Exchange Impact units
From Stations 22+00 to 24+00 and 38+28 to 43+50; 922 feet; 0.05604 EEI/feet

Alternate design

Additional Bridge: Station 36+28 to 37+75 = 147 feet additional length; 43.25 feet wide; 6,357.75 sf

Walls:
LT: Station 37+75 to 43+50 = 575 feet long; 17 to 28 feet high (average 22.5 feet); 12,937.5 sf
RT: Station 37+75 to 41+50 = 375 feet long; 14 to 20 feet high (average 17 feet); 6,375 sf
Total: 19,312.5 sf

Asphalt: 1.524 TN/lf of roadway
Station 11+00 to 27+48 and 38+05 to 50+00; 2,843 lf
At 1.524 TN/lf = 4,331.85 TN

Base: 2.549 TN/lf of roadway
Station 11+00 to 27+48 and 38+05 to 50+00; 2,843 lf
At 2.549 TN/lf = 7,246.81 TN

Environmental:
Wetlands – Station 37+75 to 43+50; 575 feet; 7.26 credits
Lake impacts – Stations 22+00 to 24+00 and 37+75 to 43+50; 775 feet; 43.43 EEI

VE ALTERNATIVE W-1.2

Lengthen the bridge by 147 feet and replace MSE walls/embankment with structure

Initial Cost Estimate

CONSTRUCTION ELEMENT		*BASELINE CONCEPT*			*ALTERNATIVE CONCEPT*		
Description	**Unit**	**Qty**	**Cost/Unit**	**Total**	**Qty**	**Cost/Unit**	**Total**
				$ -			
Structures (Cont. Bulb Tee Girder)	SF	36,763	$ 150	$ 5,514,375	36,762.5	$ 150	$ 5,514,375
Sturures (Simple Spans)	SF	0	$ 85	$ -	6,357.8	$ 85.00	$ 540,409
Walls	SF	24,000	$ 50	$ 1,200,000	20,316.5	$ 50	$ 1,015,825
				$ -			$ -
Asphalt	TN	4,556	$ 64	$ 292,798	4,331.9	$ 64	$ 278,403
Base	TN	7,621	$ 45	$ 340,363	7,245.8	$ 45	$ 323,630
				$ -			$ -
Wetland Mitigation	Credits	9	$ 17,000	$ 155,040	7.26	$ 17,000	$ 123,474
Lake Impacts	EEI*	52	$ 2,500	$ 129,175	43.43	$ 2,500	$ 108,580
				$ -			$ -
* EEI = Environmental Exchange Impact				$ -			$ -
				$ -			$ -
SUB-TOTAL				$7,631,751			$7,904,695
PROJECT MARK-UPS				$0			$0
TOTAL (Rounded)				$7,632,000			$7,905,000
						SAVINGS	**($273,000)**

VE ALTERNATIVE W-2.0

Use more sloped fill (2:1) in lieu of MSE walls

Initial Cost Savings: $586,000
LCC Savings: $0
Change in Schedule: No Change

Description of Baseline Concept: According to the 'cross sections VE.pdf' file in the project submittal, the current design proposes the use of MSE walls from Station 22+00 to 24+00 (left) with an average height of 22 feet, and from Station 36+28 to 43+50 (left) and Station 36+28 to 41+50 (right) with average heights of 26 feet and 17 feet, respectively.

Description of Alternative Concept: The alternative concept proposes to remove these walls and utilize fill slopes at 2:1 with guardrail.

Advantages:

- Less MSE wall to construct, maintain and inspect
- Less visual impact across lake using natural surface as opposed to concrete wall
- Opportunity for slope stabilization planting to improve aesthetics of lake shore

Disadvantages:

- Increase amount of fill and guardrail required
- Increase impact to the normal pool lake volume, thus increasing the need for compensatory mitigation to replace equivalent volumes and may require additional coffer dam construction

Discussion: There are no known impacts or benefits to schedule. It does not appear that the full cost for mitigating wetland impacts or lake volume impacts is known at this time. An increase in these impacts would increase the cost of mitigation and increase the environmental risk to the project.

VE ALTERNATIVE W-2.0

Use more sloped fill (2:1) in lieu of MSE walls

Baseline Concept Sketch

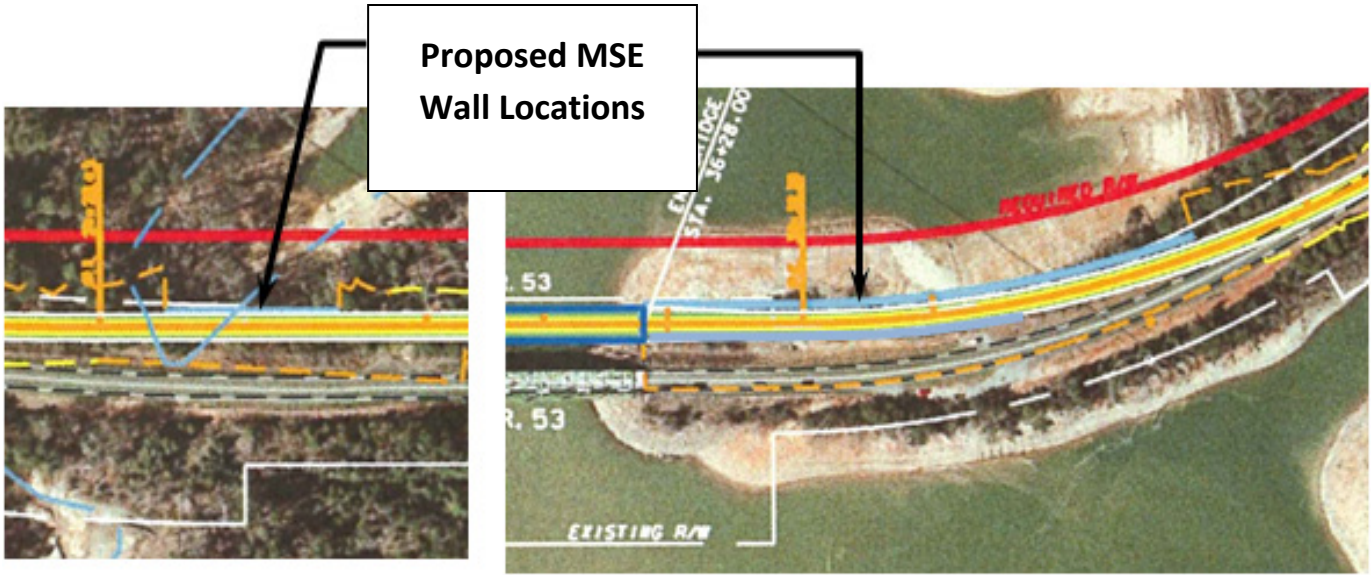

Alternative Concept Sketch

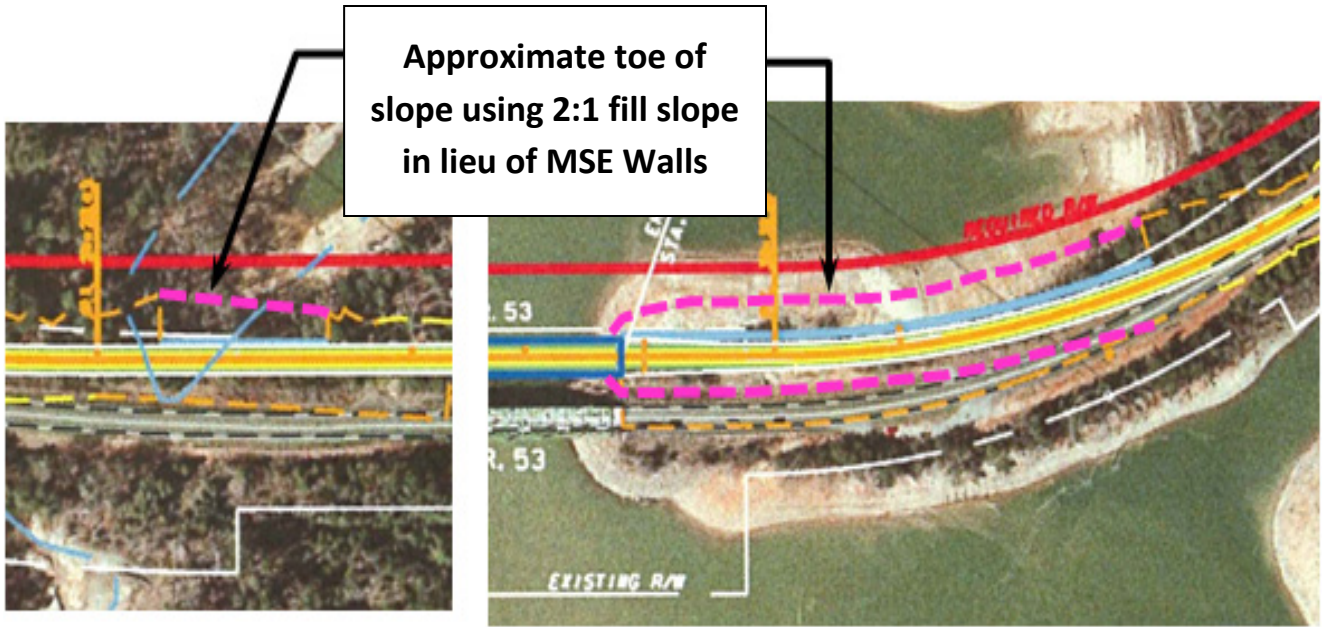

VE ALTERNATIVE W-2.0

Use more sloped fill (2:1) in lieu of MSE walls

Assumptions and Calculations:

Baseline design

Walls:

West of bridge; according to 'cross sections ve.pdf'
LT: Station 22+00 to 24+00; 18 to 28 feet high (average 23 feet); 4,600 sf
Note conceptual cost estimate included a quantity of 6,000 sf for this wall. This 6,000 sf value has been used for purposes of this study. It was also noted that total cost at $50/sf should be $300,000 and the estimate lists $1,800,000. The cost of $300,000 is used for the purposes of this study.

East of bridge; according to 'cross sections ve.pdf'
LT: Station 36+28 to 43+50 = 722 feet long; 17 to 35 feet high (average 26 feet); 18,722 sf
RT: Station 36+28 to 41+50 = 522 feet long; 14 to 20 feet high (average 17 feet); 8,874 sf
Total: 27,646 sf.
Note conceptual cost estimate included a quantity of 24,000 sf for this wall. This 24,000 sf value has been used for purposes of this study.

Erosion Control:

Calculate as percent of total construction cost.

Environmental:

Wetlands – 9.12 credits. From Station 38+28 to 43+50 = 722 feet. 0.01263 credits/feet
Lake impacts – 51.67 Environmental Exchange Impact units
From Stations 22+00 to 24+00 and 38+28 to 43+50; 922 feet; 0.05604 EEI/feet

Alternate design

Fill in Lieu of Walls:

LT: Station 22+00 to 24+00 = 200 feet long; 23 foot height; 2:1 slope, so 46 foot width; 105,800 cf
LT: Station 36+28 to 43+50 = 722 feet long; 22.5 foot height; 2:1 slope, so 45 foot width; 365,512.5 cf
RT: Station 36+28 to 41+50 = 522 feet long; 17 foot height; 2:1 slope, so 34 foot width; 150,858 cf
Total: 622,170.5 cf = 23,043.4 cy

Erosion Control:

Assume a 25% increase in cost over baseline cost.

Rock Embankment:

LT: Station 22+00 to 24+00 = 200 feet long; 5 foot height; 30 foot width; 30,000 cf
LT: Station 36+28 to 43+50 = 722 feet long; 5 foot height; 30 foot width; 108,300 cf
Total: 138,300 cf + 25% = 172,875 cf = 6402.78 cy

Environmental: Assume 150% increase in impact.
Wetlands – From Station 38+28 to 43+50. 23 credits
Lake impacts – From Stations 22+00 to 24+00 and 38+28 to 43+50. 129 EEI.

VE ALTERNATIVE W-2.0

Use more sloped fill (2:1) in lieu of MSE walls

Initial Cost Estimate

CONSTRUCTION ELEMENT		*BASELINE CONCEPT*			*ALTERNATIVE CONCEPT*		
Description	**Unit**	**Qty**	**Cost/Unit**	**Total**	**Qty**	**Cost/Unit**	**Total**
				$ -			
Walls	SF	30,000	$ 50	$ 1,500,000	0	$ 50	$ -
Earthwork (baseline is % of total)	CY	135,635	$ 15	$ 2,034,531	23,043	$ 4	$ 2,123,248
Guardrail (baseline is & of total)	LF	135,635	$ 1	$ 67,818	169,544	$ 1	$ 84,772
Erosion Control (baseline is % of total)		135,635	$ 6	$ 813,812	169,544	$ 6	$ 1,017,265
Rock Embankment	CY	0	$ 28	$ -	6,403	$ 28	$ 178,189
				$ -			$ -
Wetland Mitigation	Credits	9	$ 17,000	$ 155,040	23	$ 17,000	$ 387,600
Lake Impacts	EEI*	52	$ 2,500	$ 129,175	129	$ 2,500	$ 322,938
				$ -			$ -
* EEI = Environmental Exchange Impact				$ -			$ -
				$ -			$ -
SUB-TOTAL				$4,700,376			$4,114,012
PROJECT MARK-UPS				$0			$0
TOTAL (Rounded)				$4,700,000			$4,114,000
						SAVINGS	**$586,000**

PROJECT INFORMATION

BACKGROUND

The existing Bolling Bridge is a single structure (Structure ID 117-0010-0), steel truss bridge that carries two 12-foot travel lanes of State Route (SR) 53 over the Chestatee River/Lake Lanier. The bridge is located approximately 7.3 miles west of the City of Gainesville and is located in both Forsyth and Hall Counties. The project area is characterized by U.S. Army Corps of Engineers (USACE) land on each side of the crossing and nearby residential development. The park land east of the Chestatee River crossing is located in Hall County and is known as Little Hall Park. The USACE-owned property west of the crossing in Forsyth County is unofficially known as Bolling Hill Park. The Chestatee River/Lake Lanier is considered a navigable waterway by the USACE.

The existing bridge was constructed in 1956 and is approximately 844 feet long and 30 feet wide (total deck width), with 1-foot outside shoulders and no median. The existing vertical clearance of the Bolling Bridge is approximately 17 feet above the normal pool elevation (Elevation 1071 feet). The existing maximum horizontal clearance between bridge piers is approximately 285 feet, between the two center piers. At the bridge approaches, SR 53 is a two-lane rural highway with 10-foot travel lanes, approximately 8-foot outside shoulders (2 feet paved), and no median. The functional classification of the roadway is Rural Principal Arterial, with a posted speed of 55mph. The width of the existing right of way is 200 feet.

The Bolling Bridge is a fracture critical structure that has been struck numerous times due to its low overhead clearance (minimum clearance of 15 feet). The deck within the main spans is currently six inches thick and is exhibiting transverse and longitudinal cracking, as well as some minor spalls on the underside of the deck. Some of the floor beams and stringers have experienced minor section loss. Swelling within some of the connection areas between the gusset plates and floor beams has also been observed. All of the bents in the substructure exhibit minor cracking. Due to its lack of structural integrity, replacement of this structure is recommended.

PROJECT DESCRIPTION

Project CSBRG-0007-00(021) represents the construction of a new two-lane bridge over Chestatee River/Lake Lanier. The project will replace the existing steel truss bridge that currently exists at this location, which is considered structurally deficient. The project will begin at a point approximately 0.39 miles southwest of the Chestatee River and extend to a point approximately 0.35 miles northeast of the Chestatee River. The project length is approximately 0.74 miles. The proposed bridge will consist of two 12-foot lanes with 8-foot shoulders. The roadway approaches will be reconstructed to provide two 12-foot lanes and 10-foot shoulders. The shoulder will include a two-foot paved shoulder.

The proposed project is not associated with any other construction project and would not restrict consideration of any future improvements to SR 53. The proposed improvements are limited to the replacement of an existing bridge, on essentially the same alignment. The total project length is

approximately 0.74 mile, including the bridge approaches. The project termini are located where the new bridge would tie into the existing SR 53 roadway.

The centerline of the replacement structure would be located approximately 68 feet north of the centerline of the existing bridge. The footprint of the replacement structure is proposed to be relocated to north in order to maintain traffic during the construction phase, as there are no reasonable detours available to accommodate motorists traveling on SR 53 during the construction period. The replacement bridge would be approximately 850 feet long and approximately 43.25 feet wide (total deck width). The typical section of the new structure would include two 12-foot travel lanes with 8-foot outside shoulders and no median. The bridge approaches would be reconstructed to include 10-foot rural shoulders, with two feet paved. The replacement bridge would have a minimum vertical clearance of 17 feet above normal pool elevation and a maximum horizontal clearance of approximately 250 feet measured from the either side of the central pier to each of the outside piers. Design Year (2037) ADT is estimated at 18,000vpd. An additional 70 feet of right of way on the north side of the alignment is needed for this project.

INFORMATION PROVIDED TO THE VE TEAM

The following project documents were provided to the VE team for their use during the study:

- Project Concept Report dated 10 November 2011
- Structure Type Study
- Bridge Alternate Plans - A, B, C, D, and E
- Roadway Sections
- Project Profile
- Aerial Photo of Alignment
- VE Study Constraints & Commitments

PROJECT DRAWINGS

Selected sheets from the project drawings are included on the following pages.

PROJECT COST ESTIMATE

The project cost estimate that was used as the baseline for the VE study is included at the end of this section.

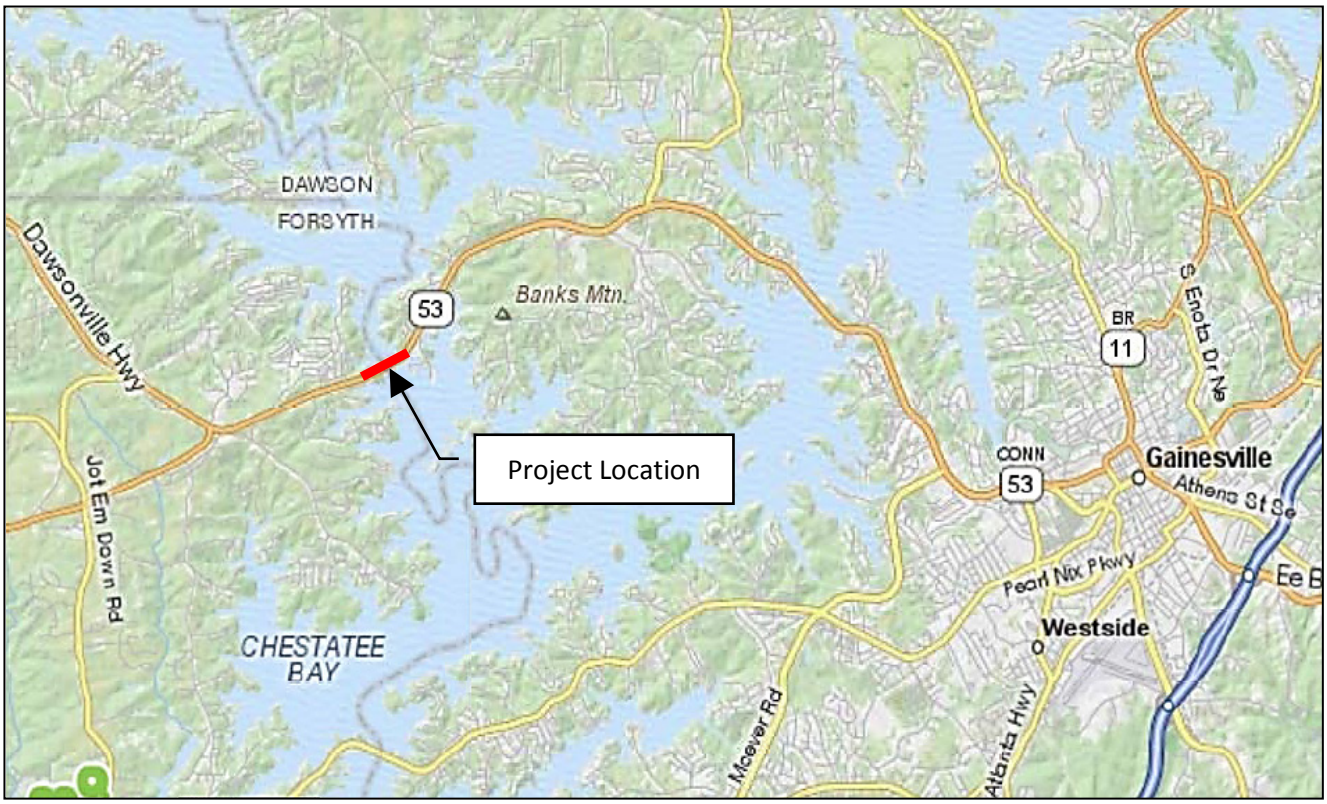

SR 53 Over Chestatee River (Lake Lanier)
Bridge Replacement
Forsyth and Hall Counties
Structure ID 117-00 10-0
CSBRG-007-00(021), PI No. 0007021

AERIAL PLAN

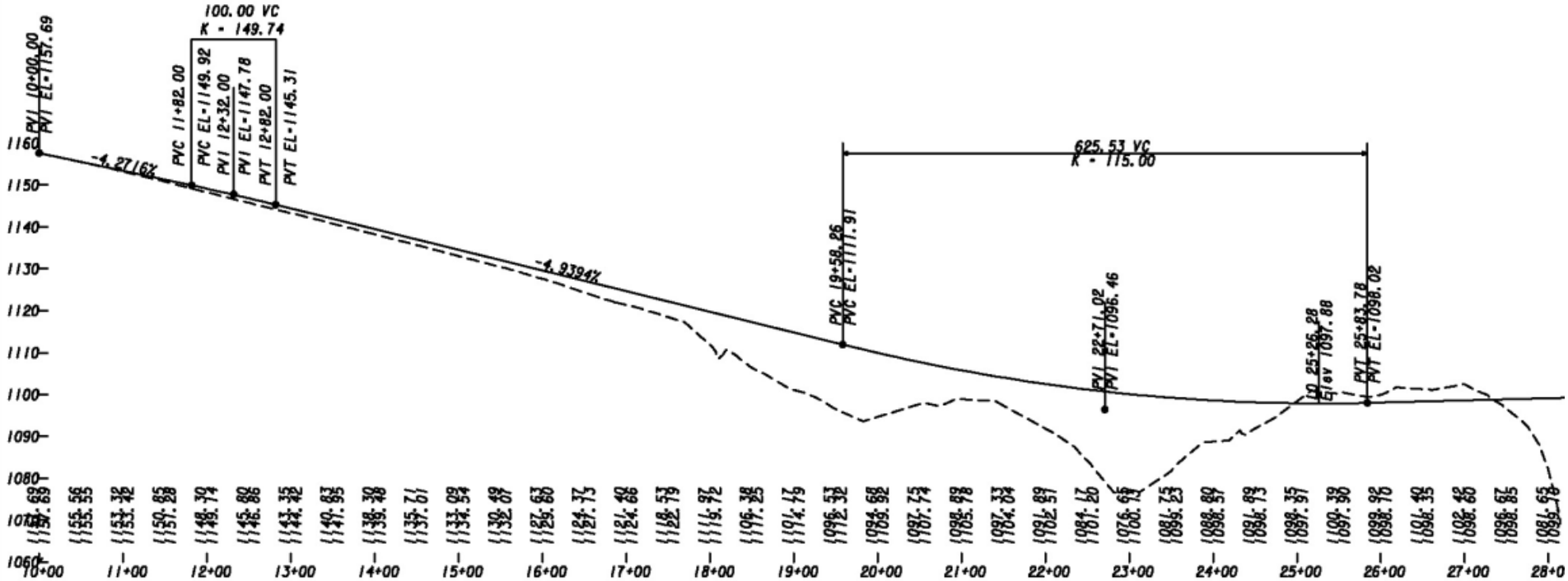

PROFILE – WEST END

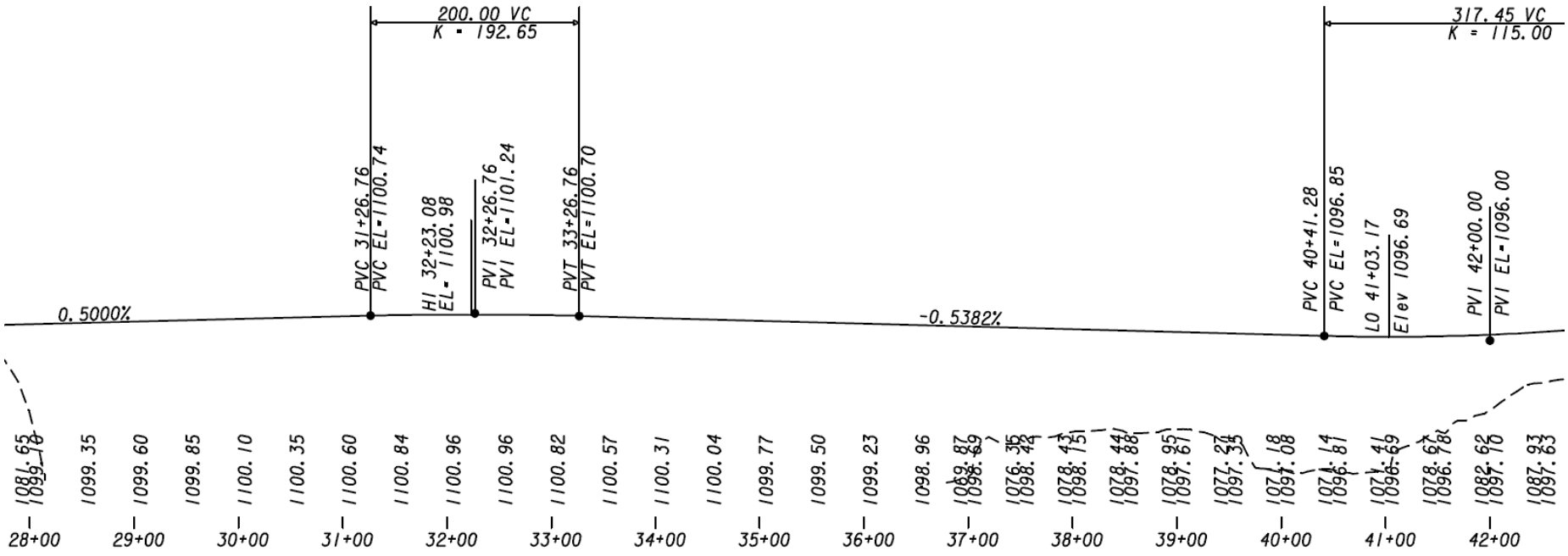

PROFILE – MIDDLE

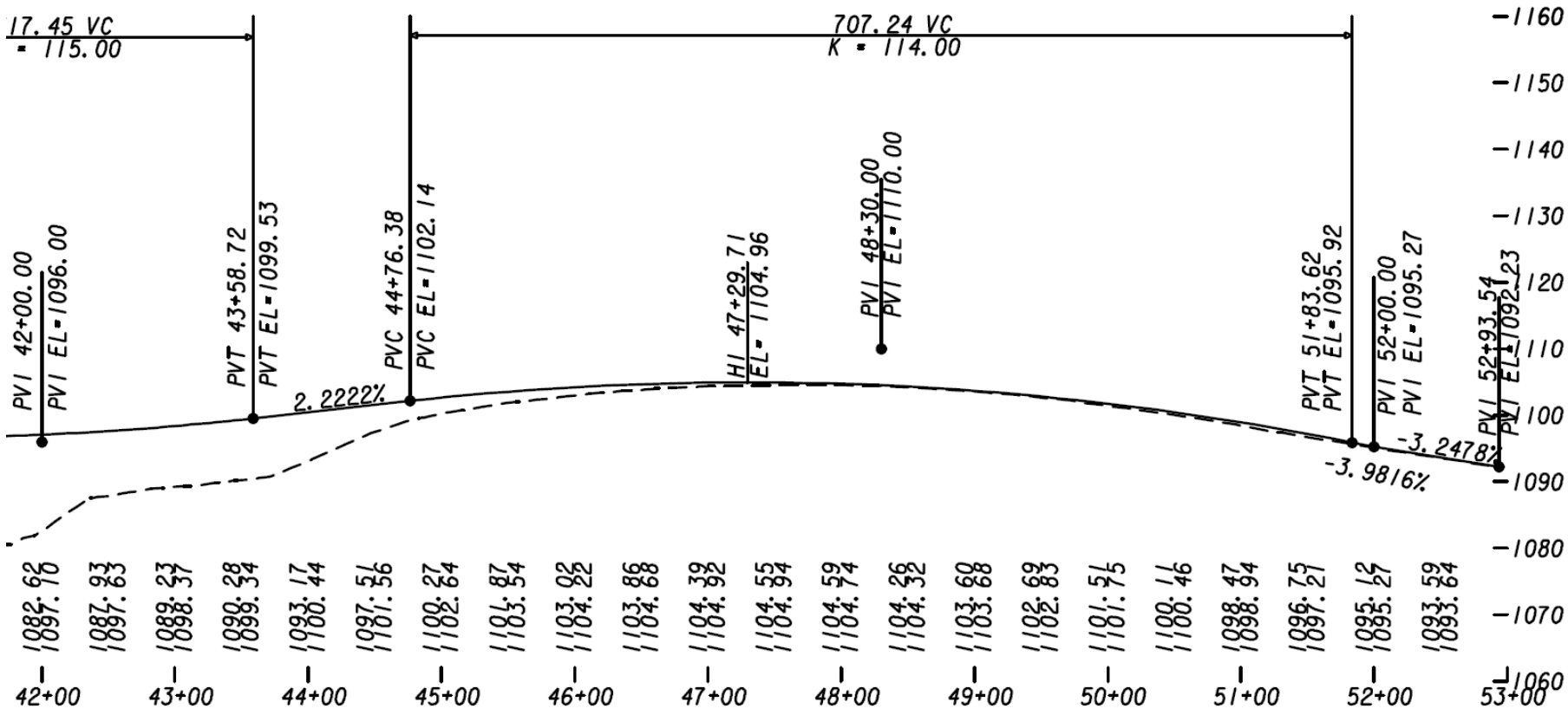

PROFILE – EAST END

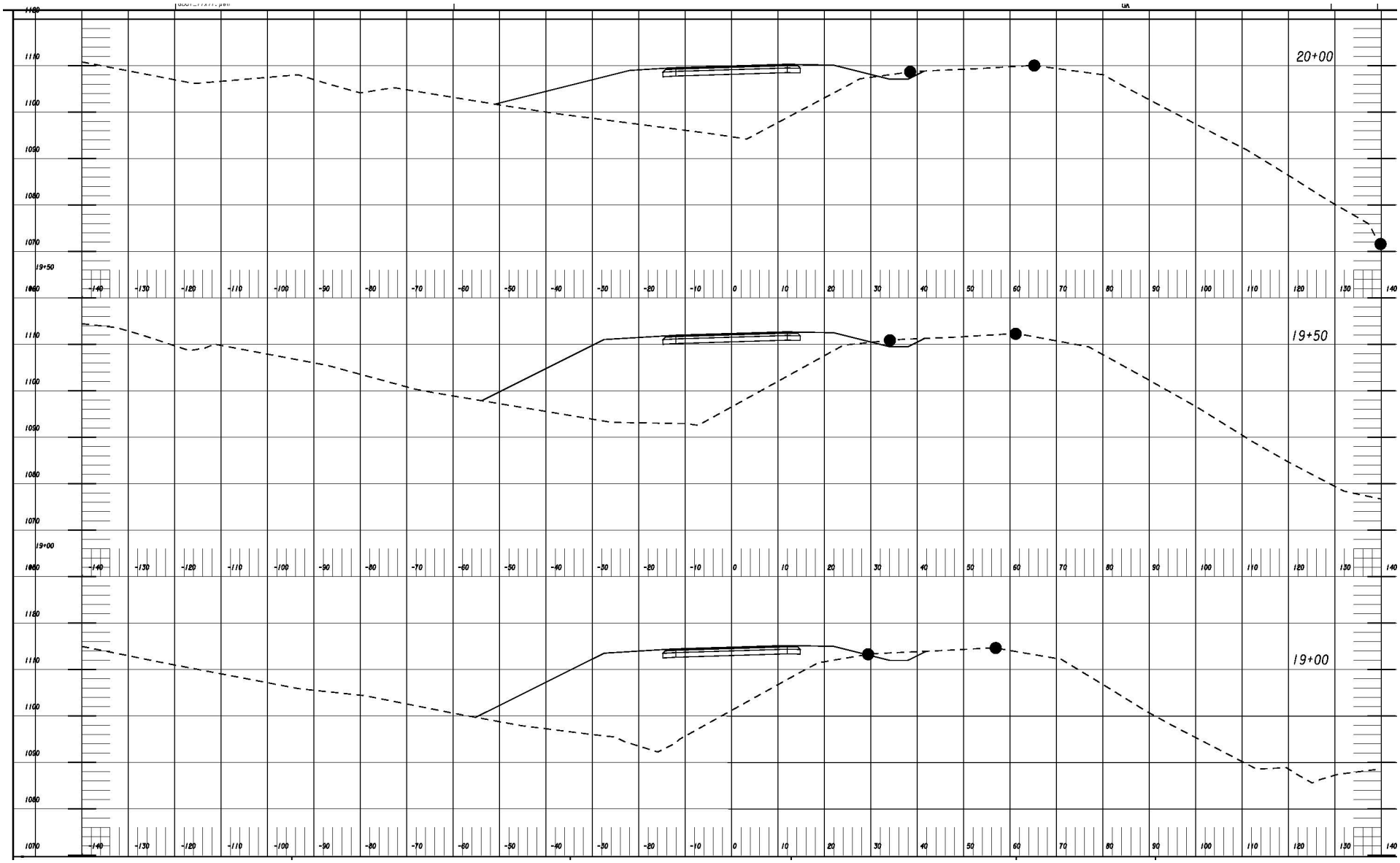

TYPICAL SECTION

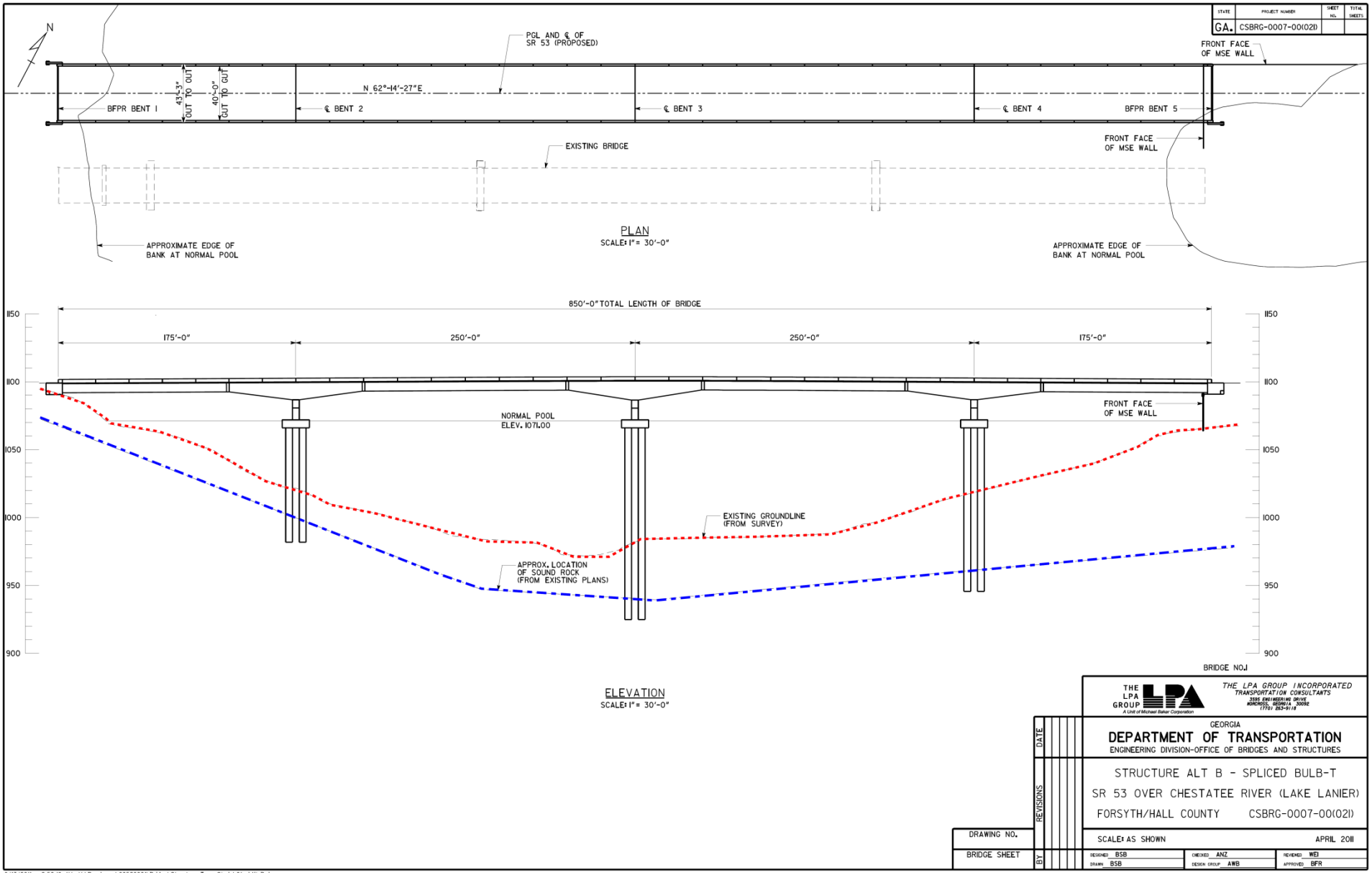

STRUCTURE ALTERNATE B

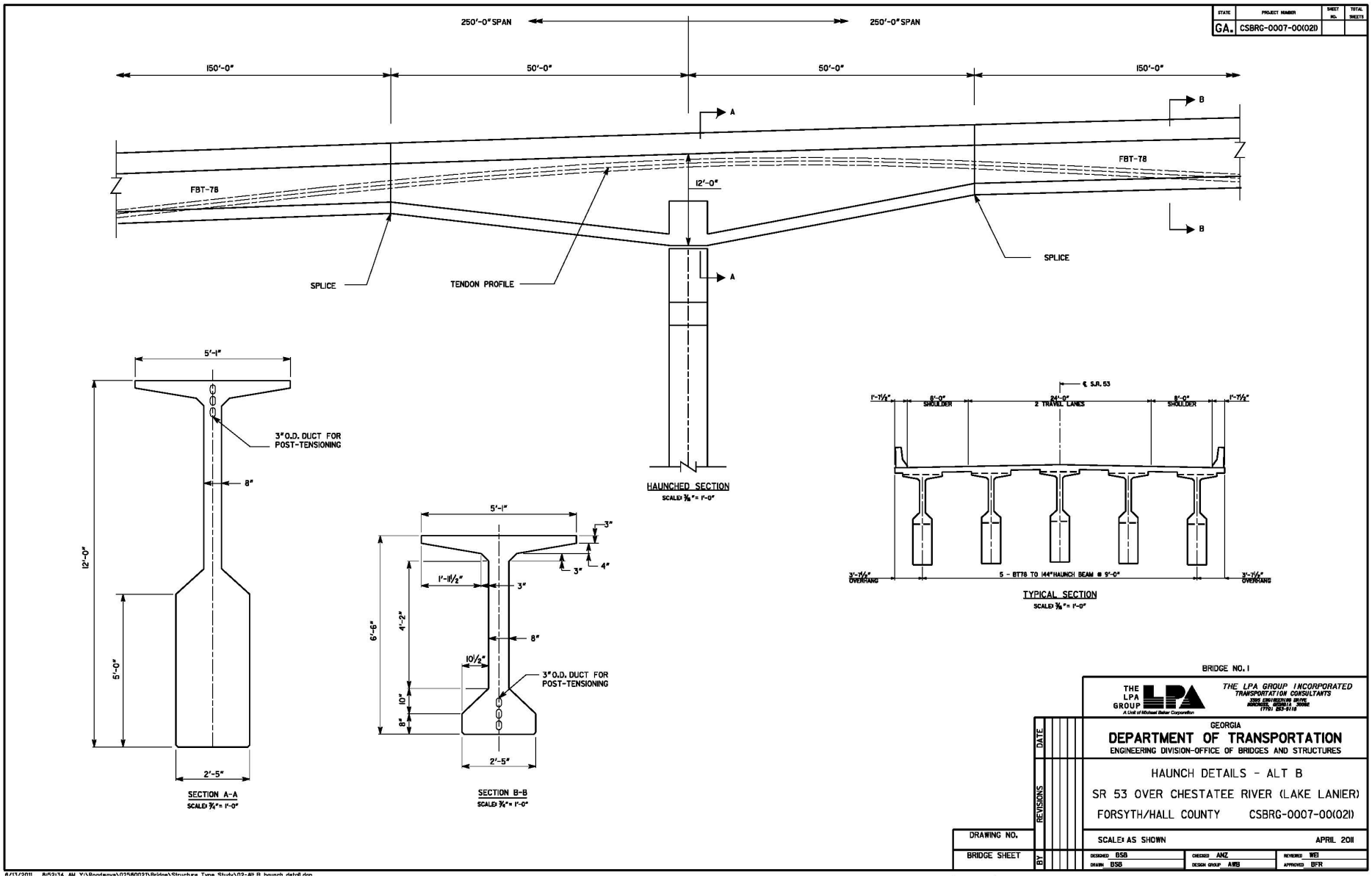

ALTERNATE B – SECTION

STATE HIGHWAY AGENCY

DATE : 09/30/2011

JOB DETAIL ESTIMATE

==========

JOB NUMBER : 0007021 SPEC YEAR: 01

DESCRIPTION: SR 53 OVER CHESTATEE RIVER (LAKE LANIER)

COST GROUPS FOR JOB 0007021

COST GROUP	DESCRIPTION	QUANTITY	PRICE	AMOUNT	ACTIVE?
ASPH	ASPHALT (TN)	4555.	64.26	292798.01	Y
BASE	BASE/AGGREGATE (TN)	7620	44.66	340363.28	Y
STRO	TRUCTURES, OTHER (SF)	36762	150.00	5514375.00	Y
DRNGPCTO	DRAINAGE (% OF JOB)	135635	2.50	339088.49	Y
EROCPCTO	EROSION CONTROL (% OF JOB)	135635	6.00	813812.37	Y
ERTHPCTO	EARTHWORK (% OF JOB)	135635	15.00	2034530.93	Y
GDRLPCTO	GUARDRAIL (% OF JOB)	135635	0.50	67817.70	Y
PFPL	PREFORMED PLASTIC STRIPES	0.640	22342	14298.99	Y
THSL	HERMO PLASTIC MARKING	14200	3.07	43678.06	Y
RPMK	RAISED PAVEMENT MARKING	150	4.33	649.62	Y
SIGNPCTO	SIGNS (PERCENT OF JOB)	135635	0.20	27127.08	Y
TRFT	TRAFFIC CONTROL-TEMP. (LS)	1.00	75000.	75000.00	Y
WALL	WALLS (SF)	24000	50.	1200000.00	Y
WALL	WALLS (SF)	6000	50.	1800000.00	Y
RMVL	REMOVALS (LS)	1.00	1000000	1000000.00	Y
ACTIVE COST GROUP TOTAL				$13,563,539	
INFLATED COST GROUP TOTAL				$13,563,539	

TOTALS FOR JOB 0007021

ESTIMATED COST: $ 13,563,539

CONTINGENCY PERCENT (0.0): 0.00

PROJECT ANALYSIS

SUMMARY OF ANALYSIS

The following analysis tools were used to study the project:

- Key Project Factors
- Cost Model
- Function Analysis
- Value Metrics

KEY PROJECT FACTORS

The first day of the VE study included an overview of the project and a virtual site visit. The following summarizes key project issues and site visit observations identified during these sessions.

Project Issues

The following are some of the issues and concerns associated with the project.

- Approximately 51,000 cubic yards of import material is needed for the new profile
- Approximately 1.5 acres of impact to Lake Lanier
- Park Impacts – Adverse impacts to the NRHP-eligible bridge, especially the west end of the bridge (recreational property)
- Must maintain approximately the same horizontal "open water" (280 feet) for vessels as the existing bridge
- Must maintain the same vertical clearance (17 feet) over the full pool, Elevation 1,071
- There can be no net volume change of water storage below Elevation 1,085. Any construction items introduced below this elevation must be mitigated for the equal volume replacement at the appropriate flood level
- Migratory bird nesting season may be an issue since there is an osprey nest on the existing bridge
- The existing bridge will require a permit prior to demolition
- Project letting must be by May 2014
- The footings will be in the range of 150 feet deep to rock

Site Observations

A virtual site visit was conducted in order to visually assess the project site conditions. The following observations were made by the VE team.

- Foundations will be relatively deep to meet the hard rock layer
- Cofferdams will be required to construct the foundations and possibly portions of the MSE walls
- New right of way is required to provide an additional 65 feet of space for construction of the new alignment
- Truck traffic is estimated at 10%
- The design year traffic (2037) is 18,000 vpd
- Posted speed limit is 55 mph
- Approximately 51,000 cubic yards of import material is needed
- May need to export 27,000 cubic yard (existing embankment) to meet the maximum storage volume issue for the COE

COST MODEL

The VE team leader prepared a cost model from the cost estimate presented in the *Project Information* section of this report. The model is organized to identify major construction elements or trade categories, the original estimated costs, and the percent of total project cost for the significant cost items.

The cost model clearly showed the cost drivers for the project and was used to guide the VE team during the VE study. The key cost drivers for the project include basic issues such as the length and type of bridge structure, amount of walls, profile of the roadway, and demolition of the existing bridge. Balancing the cut/fill quantities would help reduce import volumes, but this appears to be driven by the minimum COE bridge clearance above the lake levels.

Further optimization in the bridge substructure and superstructure appears warranted since it is the largest cost component on the project. Alternatives for the two retaining walls would also be warranted since they contribute a combined cost of $3 million. The unit quantities on the MSE walls appear to be somewhat low, since they do not appear to include the wall depth required below grade, especially since some of the walls could be constructed in the water.

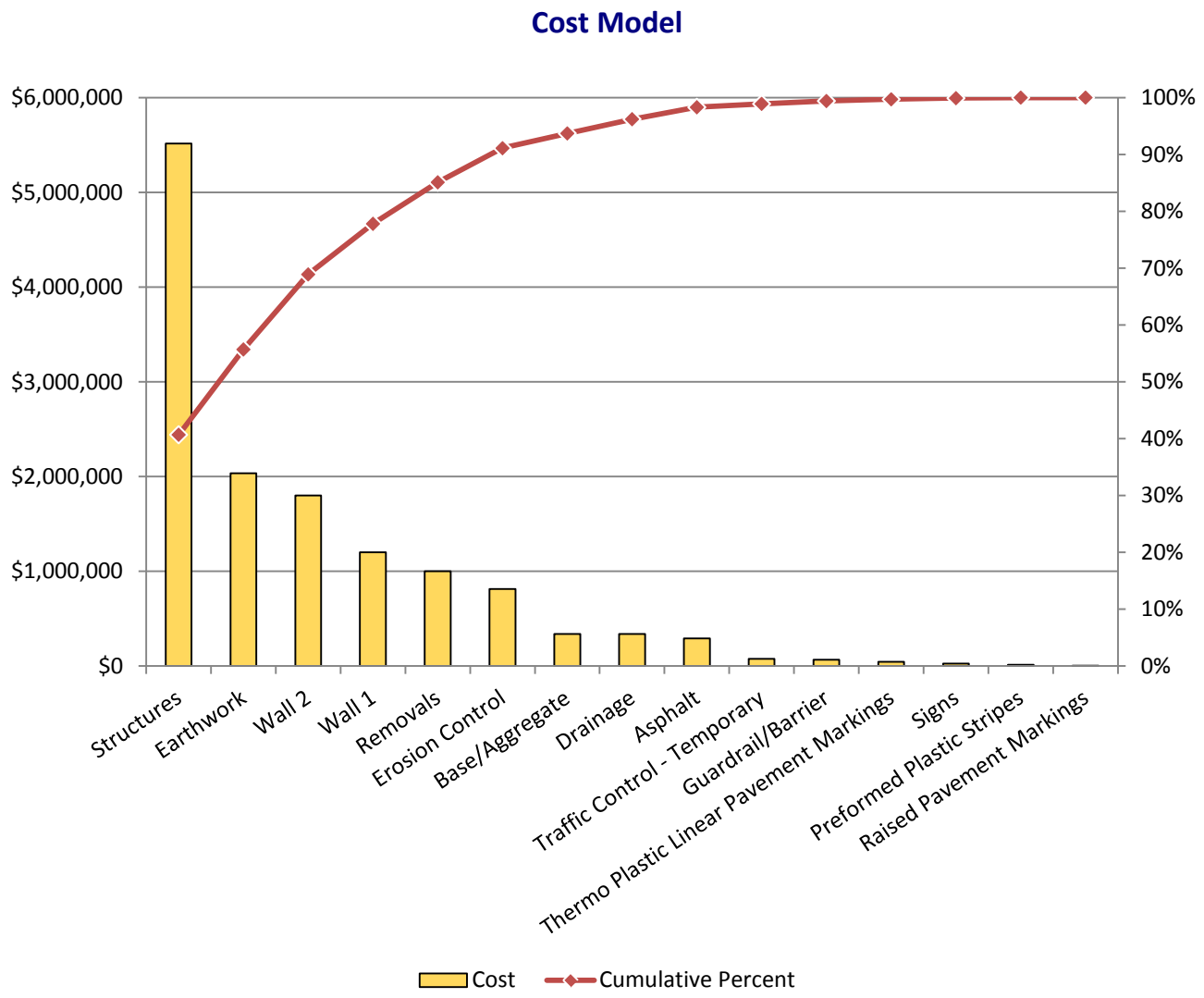
Cost Model
$6,000,000
$5,000,000
$4,000,000
$3,000,000
$2,000,000
$1,000,000
$0
100%
90%
80%
70%
60%
50%
40%
30%
20%
10%
0%
Structures
Earthwork
Wall 2
Wall 1
Removals
Erosion Control
Base/Aggregate
Drainage
Asphalt
Traffic Control - Temporary
Guardrail/Barrier
Thermo Plastic Linear Pavement Markings
Signs
Preformed Plastic Stripes
Raised Pavement Markings
Cost
Cumulative Percent

FUNCTION ANALYSIS

Function analysis was performed and a Function Analysis System Technique (FAST) Diagram was produced, which revealed the key functional relationships for the project. This analysis provided a greater understanding of the total project and how the project's performance, cost, time, and risk characteristics are related to the various functions identified.

The FAST diagram arranges the functions in logical order so that when read from left to right, the functions answer the question, "How?" If the diagram is read from right to left, the functions answer the question, "Why?" Functions connected with a vertical line are those that happen at the same time as, or are caused by, the function at the top of the column (a "When?" relationship).

The function analysis of the project revealed that environmental mitigation is a key element of the project both procedurally and economically. The project schedule will be driven off of the mitigation requirements and constraints placed on the contractor.

Random Function Determination

Project Element	Function	Cost	Performance	Risk
Need	Improve Structure	$13,655,902	Maintainability	Low
Purpose	Span River	$5,514,375	Construction Impacts	Low
Traffic	Increase Capacity	$0	Mainline Operations	Low
Traffic	Improve Operability	$3,235,352	Mainline Operations	Very Low
Traffic	Improve Drivability	$0	Mainline Operations	Very Low
Environmental	Minimize Impacts	$1,813,812	Environmental Impacts	Low
Traffic	Meet Criteria	$0	Maintainability	Low
Permitting	Satisfy COE	$0	Environmental Impacts	Medium
CM	Control Budget	$0	Construction Impacts	Low
Permitting	Minimize Risk	$0	Environmental Impacts	Medium
Utilities	Accommodate Utilities	$0	Construction Impacts	Very Low
Structure	Renew Infrastructure	$0	Maintainability	Medium
Management	Meet Schedule	$0	Construction Impacts	High
Structure	Meet Clearance	$0	Mainline Operations	Low
Structure	Minimize Obstructions	$1,000,000	Environmental Impacts	Low
Environmental	Obtain Permits	$0	Environmental Impacts	Medium
Structure	Minimize ROW	$3,000,000	Environmental Impacts	Low
Structure	Accommodate Construction	$0	Construction Impacts	Low
Structure	Design Project	$0	Mainline Operations	Low

FAST Diagram

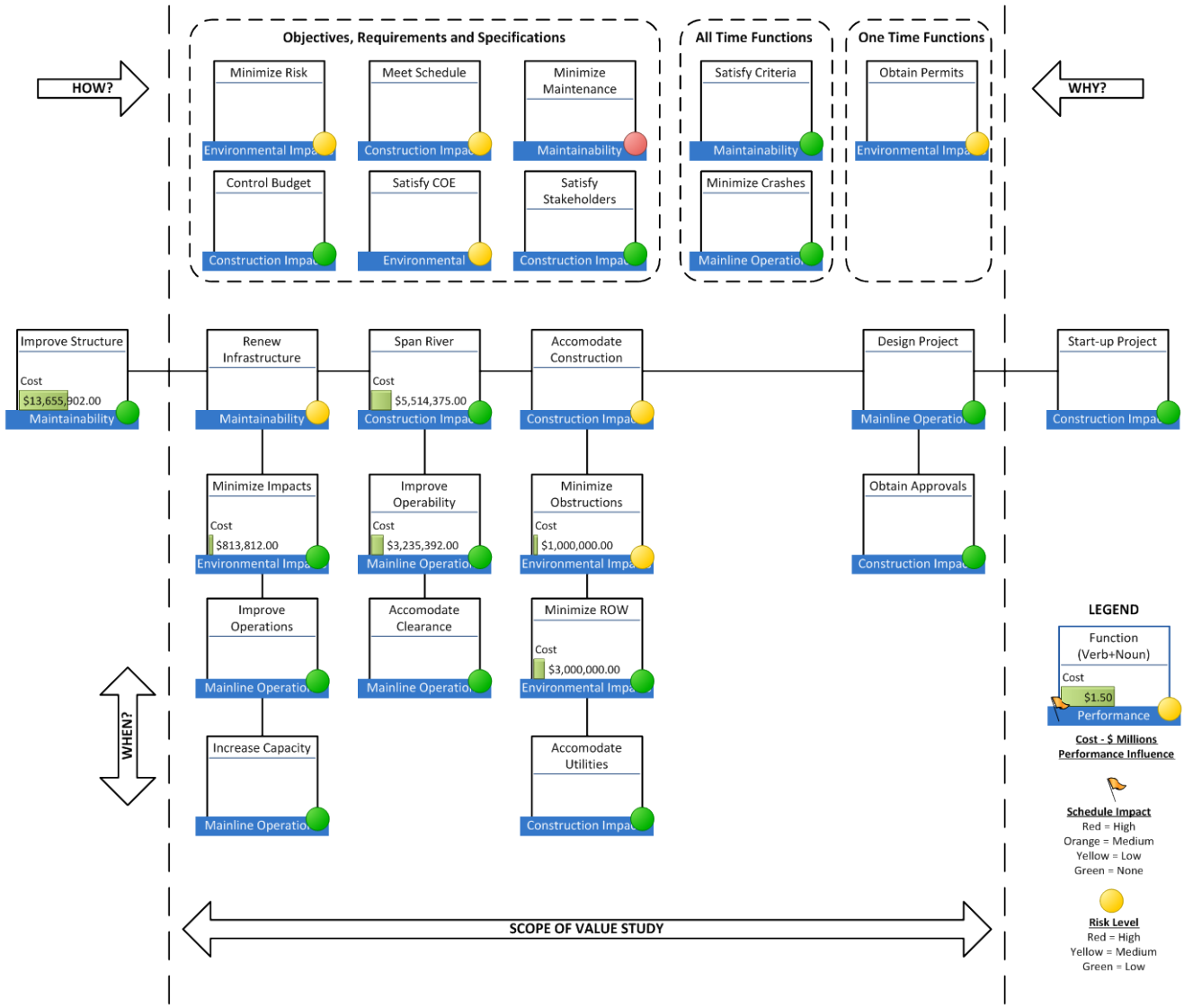

VALUE METHODOLOGY

Value Methodology (VM) has traditionally been perceived as an effective means for reducing project costs. This paradigm only addresses one part of the value equation, oftentimes at the expense of the role that VM can play with regard to improving project performance. Project costs are fairly easy to quantify and compare; performance is not.

Project performance must be properly defined and agreed to by the project team at the beginning of the VE study. The performance requirements and attributes developed are then used throughout the study to identify, evaluate, and document alternatives.

Although this process includes a number of tools and can be applied in a range of scenarios, the VE team for the SR 53 project discussed the key performance attributes for this project and used this tool to assess the Baseline Design. The goal was to identify key opportunities in the Baseline which would lead the team towards solutions to optimize each of the performance attributes and requirements. The following pages describe the steps followed by the VE team.

Define Performance Attributes

Performance attributes represent those aspects of a project's scope that may possess a range of potential values. For example, an attribute called "Environmental Impacts" may have a range of acceptable values for a project ranging from 1 acre to 20 acres of wetlands mitigation. It is clear that a concept that offered 15 acres of mitigation would perform at a higher level than one that offered 5 acres, but both would meet the project's need and purpose, and their values (i.e., the relationship between performance and cost) could be rationally compared. The following performance attributes were selected for SR 53 project.

Maintainability

An assessment of the long-term maintainability of the transportation facility(s). Maintenance considerations include the overall durability, longevity, and maintainability of pavements, structures, and systems; ease of maintenance; accessibility and safety considerations for maintenance personnel.

Mainline Operations

An assessment of traffic operations and safety on the mainline facility(s), including off-ramps and collector-distributor roads. Operational considerations include level of service relative to the 20-year traffic projections, as well as geometric considerations such as design speed, sight distance, lane widths, and shoulder widths.

Environmental Impacts

An assessment of the permanent impacts to the environment, including ecological (i.e., flora, fauna, air quality, water quality, visual, noise); socioeconomic impacts (i.e., environmental justice); impacts to cultural, recreational, and historic resources. Also considered under this attribute are drainage and hydraulic issues.

Construction Impacts

An assessment of the temporary impacts to the public during construction related to traffic disruptions, detours, and delays; impacts to businesses and residents relative to access, visual, noise, vibration, dust, and construction traffic; environmental impacts related to water quality, air quality, soil erosion, and local flora and fauna.

Prioritize Performance Attributes

The performance attributes of a project are seldom of equal importance. Therefore, a systematic approach must be utilized in order to determine their relative importance in meeting the project's need and purpose.

Once the performance attributes were defined, the project team prioritized them based on their relative importance to the SR 53 project as discussed in the initial presentation by the design team. The Analytic Hierarchy Process (AHP) was utilized in the prioritization process. The performance attributes were systematically compared in pairs, asking the question: "An improvement to which attribute will provide the greatest benefit relative to the project's need and purpose?" Based upon their experience with previous GDOT projects and information presented by the design team, the VE team members were then asked to indicate their priorities and the relative intensities of their preferences. The chart below provides the results of this analysis expressed as a percentage of the whole.

Performance Attribute Prioritization

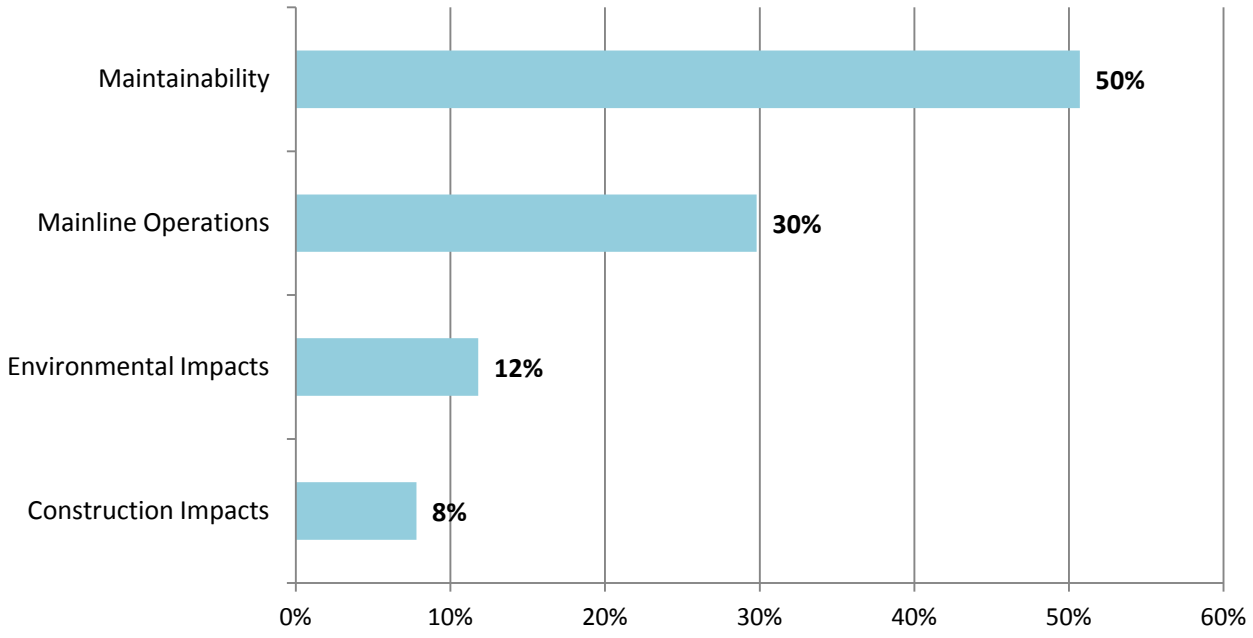

Assess Performance of Baseline Concept

Based on the attribute priorities noted above, the VE team evaluated the qualitative performance of the baseline concept and recorded comments on each of the performance attributes. The team's impression of how well the baseline concept responds to each of the attributes is captured in these comments. When approached in a more comprehensive effort, it is possible to numerically score each attribute for both the baseline concept and each VE alternative. This comparison can form the basis for evaluating value improvement between various possible VE alternatives which may satisfy a similar function.

Maintainability

Rationale: The concrete design will result in a very durable facility with low maintenance requirements in the future. The Baseline concrete design results in an economical structure with low life cycle cost. Based upon current market conditions and future life cycle costs, concrete has a much lower total cost of ownership than steel.

Mainline Operations

Rationale: The bridge purpose and need is for a two lane facility which meets the criteria and design year ADT. The design appears to meet this requirement. Future capacity beyond the 18,000vph would probably require a four lane facility, but funding is typically not provided for facilities beyond the planning period. The roadway alignment needs to at least consider how SR53 would be 4-laned in the future and this would be constructed.

Environmental Impacts

Rationale: The design team has done a good job in reviewing the environmental issues with the COE and assessing the mitigation risks. Some opportunity exists though to control these risks and reduce the possibility of scope creep for this portion of the work. It is anticipated that the cost for mitigation measures may increase two or three fold as issues and defined and agreeable solutions are negotiated with the COE.

Construction Impacts

Rationale: The project appears quite constructible although the continuous Bulb-T will require a contractor with some skill in post-tensioned members and have the provisions to ship the girders into the Atlanta area from Florida. Shifting the alignment to the north is an added cost, but detours have been eliminated from consideration due to the 22-mile travel distance. Construction access may require mobilization of several barges to construct the new bridge and for the demolition of the existing structure.

IDEA EVALUATION

The ideas generated by the VE team were carefully evaluated, and project-specific attributes were applied to each idea to assure an objective evaluation.

PERFORMANCE ATTRIBUTES

The following are key performance attributes identified for this project and used to assist the VE team in evaluating the ideas:

- Maintainability
- Mainline Operations
- Environmental Impacts
- Construction Impacts

The VE team gained knowledge from the project team during the design presentation regarding project priorities, and expanded these discussion points around specific project attributes that could be used to evaluate the baseline design and potential VE alternatives.

EVALUATION PROCESS

The VE team generated and evaluated ideas on how to perform the various project functions using other approaches. The idea list was grouped by function or major project element. Each idea was evaluated with respect to the functional requirements of the project. Performance, cost, time, and risk may also have been considered during this evaluation.

Once each idea was fully evaluated, it was given a total rating number. This is based on a scale of 1 to 7, as indicated by the rating index described in the *Value Analysis Process* section of this report. Ideas rated 4 to 7 were developed further and those that were found to have the greatest potential for value improvement are documented in the *VE Alternatives* section of this report.

IDEA SUMMARY

All of the ideas that were generated during the Speculation Phase using brainstorming techniques were recorded on the following pages. Ideas received an idea code based on the function statement under which it was brainstormed. The following table indicates the functions related to each idea code.

Idea Code	Related Function
A	Alignment
B	Bridge
CM	Construction Management
E	Environmental

Idea Code	Related Function
P	Profile
S	Section
W	Walls

A detailed idea evaluation summary is also included. This summary includes additional information related to how each idea improves or degrades the elements of performance, cost, time (schedule), and risk. Only those elements where the idea differs from the baseline concept are included in this summary.

IDEA SUMMARY LIST

Idea Code and Description	Rating
W-1.2: Length the bridge by 147 feet and replace MSE walls/embankment with structure	6
W-1.1: Lengthen the bridge by 522 feet and replace MSE walls/embankment with structure.	6
B-7: Reduce the number of beams in Alternate B from 5 to 4.	6
W-1: Lengthen the bridge and replace MSE walls/embankment with structure.	6
A-1: Shift the centerline of the alignment south by 24 feet, closer to the existing bridge.	6
B-9: Use a zero overhang bridge and eliminate exterior deck forming.	5
CM-2.1: Allow a base bid bridge design (Alternate B) with specific bid options for foundations.	5
CM-2: Allow a base bid bridge design (Alternative B) with allowable design options by the contractor	5
B-10: Use higher strength concrete mix for the bridge deck.	5
B-13: Shorten the drilled caissons by 20 – 25 feet	DS
A-2: Shorten the eastern termination point, end at STA 48+00 in lieu of STA 50+00.	5
W-2: Use more sloped fill in lieu of MSE walls.	5
B-12: Don't demolish the existing bridge, leave in place.	DIS
P-4: Lower the profile on the eastern end only.	4
W-3: Increase the fill slope from 2:1 to 1.5:1.	3
B-6: Use extradosed bridge design concept with three spans in lieu of the precast concrete (Alt. B) with four spans.	2
CM-3: Use a Design/Build procurement in lieu of Design/Bid/Build.	DIS
B-1: Use two piers in lieu of three.	DIS
B-4: Repair the existing bridge in lieu of replacement.	DIS
B-5: Prohibit truck traffic, place load limits, delay construction.	DIS
B-3: Use a temporary two lane bridge on a new alignment and replace the existing structure on the old alignment.	DIS

Idea Code and Description	Rating
CM-1: Demolish the bridge by blasting in lieu of incremental removal.	DIS
B-2: Use a floating bridge in lieu of the 4 span concrete.	DIS
B-8: Use a tunnel in lieu of a bridge.	DIS
P-2: Increase the longitudinal slope on the bridge from 0.5% to 0.75%.	DIS
P-1: Lower the profile on the eastern and western ends to capture fill material.	DIS
S-1: Design alignment/structure for four lanes, two lanes current, two lanes in the future.	DIS
P-3: Lower the profile on the east end to simplify the tie-in to the existing road.	DIS
E-2: Accelerate the design to clarify environmental impacts for stakeholders.	DIS
W-4: Use soldier piles and lagging in lieu of MSE walls.	DIS
B-11: Use spread footings for the bridge foundations.	DIS
E-1: Modify the drainage/treatment basin to reduce maintenance.	DIS
CM-4: Shutdown the roadway, build a new bridge in place of the old, use an extended detour.	DIS

DS: Design Suggestion

DIS: Dismissed

DETAILED IDEA EVALUATION SUMMARY

W-1.2: **Length the bridge by 147 feet and replace MSE walls/embankment with structure** — Overall Rating: **6**

Attributes	*Rating*	*Comments*
Environmental Impacts	Improved	

General comments: Converting more of the project to structure simplifies the environmental permitting, reduces risk, and streamlines the construction.

W-1.1: **Lengthen the bridge by 522 feet and replace MSE walls/embankment with structure.** — Overall Rating: **6**

Attributes	*Rating*	*Comments*
Environmental Impacts	Improved	Greatly reduces impacts.
Construction Impacts	Improved	

General comments: Greatly streamlines and reduces risk for environmental permitting.

B-7: **Reduce the number of beams in Alternate B from 5 to 4.**

Overall Rating: **6**

Attributes	*Rating*	*Comments*
Construction Impacts	Improved	One less beam line to construct.

General comments: This could easily be implemented, but some additional analysis is needed.

W-1: **Lengthen the bridge and replace MSE walls/embankment with structure.**

Overall Rating: **6**

Attributes	*Rating*	*Comments*
Environmental Impacts	Improved	Less impacts
Construction Impacts	Unchanged	Less import material
Maintainability	Degraded	Bridge to maintain instead of walls

General comments: This is a reasonably good idea if the cost trade-offs reveal a benefit to the project.

A-1: **Shift the centerline of the alignment south by 24 feet, closer to the existing bridge.**

Overall Rating: **6**

Attributes	*Rating*	*Comments*
Mainline Operations	Improved	
Environmental Impacts	Improved	
Construction Impacts	Improved	

General comments: Shifting the centerline appears workable and will reduce ROW costs.

B-9: **Use a zero overhang bridge and eliminate exterior deck forming.**

Overall Rating: **5**

Attributes	*Rating*	*Comments*
Construction Impacts	Improved	No deck overhang formwork.

General comments: This has been done on a number of GDOT structures.

CM-2.1: **Allow a base bid bridge design (Alternate B) with specific bid options for foundations.**

Overall Rating: **5**

Attributes	*Rating*	*Comments*
Mainline Operations	Unchanged	Would not change the alignment or profile.
Environmental Impacts	Unchanged	Additional review may be needed by the COE.
Construction Impacts	Improved	Impacts would be minimized through contractor selection of the least cost option.
Maintainability	Unchanged	Design is controlled by the GDOT.

General comments: Allowing the contractors to price several foundation design options gives them the ability to maximize their means and methods to suit their experience and available equipment.

CM-2: **Allow a base bid bridge design (Alternative B) with allowable design options by the contractor**

Overall Rating: **5**

Attributes	*Rating*	*Comments*
Environmental Impacts	Unchanged	May have differing permitting issues.

General comments: This may increase competition and allow creative solutions from the contracting community to be included in the project.

B-10: **Use higher strength concrete mix for the bridge deck.**

Overall Rating: **5**

Attributes	*Rating*	*Comments*
Maintainability	Improved	Better durability

General comments: Increasing the fc' from 3,500psi to 4,500psi could reduce the deck thickness and improve durability.

B-13: **Shorten the drilled caissons by 20 – 25 feet**

Overall Rating: **DS**

Attributes	*Rating*	*Comments*
Construction Impacts	Improved	Shorter drilled caissons

General comments: The foundation is a major cost element of the project and some optimization may be possible. Additional geotechnical investigation is needed before final selection of the foundation type and depth can be confirmed. Design Suggestion.

A-2: **Shorten the eastern termination point, end at STA 48+00 in lieu of STA 50+00.**

Overall Rating: **5**

Attributes	*Rating*	*Comments*
Construction Impacts	Improved	Slightly less work.

General comments: Moving the termination point on the east end appears feasible.

W-2: **Use more sloped fill in lieu of MSE walls.**

Overall Rating: **5**

Attributes	*Rating*	*Comments*
Environmental Impacts	Degraded	More impacts
Construction Impacts	Degraded	

General comments: Requires more land and could generate more environmental impacts to balance the cut/fill and lake volume constraints.

B-12: **Don't demolish the existing bridge, leave in place.**

Overall Rating: **DIS**

Attributes	*Rating*	*Comments*

General comments: GDOT prefers to demolish old structures from a public safety and liability perspective.

P-4: **Lower the profile on the eastern end only.**

Overall Rating: **4**

Attributes	*Rating*	*Comments*
Environmental Impacts	Improved	Less impacts on the eastern end.

General comments: Some redesign would be needed.

W-3: **Increase the fill slope from 2:1 to 1.5:1.**

Overall Rating: **3**

Attributes	*Rating*	*Comments*
Maintainability	Degraded	Harder to maintain

General comments: GDOT prefers slopes no more than 2:1.

B-6: **Use extradosed bridge design concept with three spans in lieu of the precast concrete (Alt. B) with four spans.**

Overall Rating: **2**

Attributes	*Rating*	*Comments*
General comments: Somewhat unique bridge design concept.		

CM-3: **Use a Design/Build procurement in lieu of Design/Bid/Build.**

Overall Rating: **DIS**

Attributes	*Rating*	*Comments*
Construction Impacts	Improved	
General comments: A D/B contract package would need to be developed and could jeopardize meeting the let date of May 2014.		

B-1: **Use two piers in lieu of three.**

Overall Rating: **DIS**

Attributes	*Rating*	*Comments*
Environmental Impacts	Improved	One less pier in the water.
Construction Impacts	Improved	Less work in the water
Maintainability	Improved	Less work in the water/future inspection.
General comments: After further review, longer spans are not feasible using a concrete solution.		

B-4: **Repair the existing bridge in lieu of replacement.**

Overall Rating: **DIS**

Attributes	*Rating*	*Comments*
Mainline Operations	Degraded	Constant maintenance will restrict traffic.
Environmental Impacts	Improved	No new impacts
Construction Impacts	Degraded	Complicated repairs.
Maintainability	Degraded	Very old bridge.
General comments: Would require the bridge to be shut down and a detour used.		

B-5: **Prohibit truck traffic, place load limits, delay construction.**

Overall Rating: **DIS**

Attributes	*Rating*	*Comments*
Mainline Operations	Degraded	Very poor solution.
Maintainability	Degraded	Must maintain old bridge.

General comments: Not acceptable.

B-3: **Use a temporary two lane bridge on a new alignment and replace the existing structure on the old alignment.**

Overall Rating: **DIS**

Attributes	*Rating*	*Comments*

General comments: Temporary bridge may be quite expensive.

CM-1: **Demolish the bridge by blasting in lieu of incremental removal.**

Overall Rating: **DIS**

Attributes	*Rating*	*Comments*
Environmental Impacts	Degraded	Significantly increases permitting issues
Construction Impacts	Improved	

General comments: Not an acceptable solution due to safety concerns and lead based paint on the existing bridge.

B-2: **Use a floating bridge in lieu of the 4 span concrete.**

Overall Rating: **DIS**

Attributes	*Rating*	*Comments*

General comments: Very unique solution, but has never been done by GDOT in the past.

B-8: **Use a tunnel in lieu of a bridge.**

Overall Rating: **DIS**

Attributes	*Rating*	*Comments*
Environmental Impacts	Improved	
Construction Impacts	Degraded	
Maintainability	Degraded	

General comments: Very expensive – drop idea.

P-2: **Increase the longitudinal slope on the bridge from 0.5% to 0.75%.**

Overall Rating: **DIS**

Attributes	*Rating*	*Comments*
Mainline Operations	Degraded	

General comments: Introduces another vertical curve into the project.

P-1: **Lower the profile on the eastern and western ends to capture fill material.**

Overall Rating: **DIS**

Attributes	*Rating*	*Comments*
Mainline Operations	Degraded	Would increase slopes greater than 5%.

General comments: The profile is generally fixed on the west end due to the bridge location and existing side roads.

S-1: **Design alignment/structure for four lanes, two lanes current, two lanes in the future.**

Overall Rating: **DIS**

Attributes	*Rating*	*Comments*

General comments: Funding won't cover future four lane facilities.

P-3: **Lower the profile on the east end to simplify the tie-in to the existing road.**

Overall Rating: **DIS**

Attributes	*Rating*	*Comments*

General comments: See P-4.

E-2: **Accelerate the design to clarify environmental impacts for stakeholders.**

Overall Rating: **DIS**

Attributes	*Rating*	*Comments*

General comments: Finishing early may help the permitting process, but the funds may not be available earlier than scheduled.

W-4: **Use soldier piles and lagging in lieu of MSE walls.**

Overall Rating: **DIS**

Attributes	*Rating*	*Comments*
Environmental Impacts	Degraded	Visual impacts

General comments: Visually complicating.

B-11: **Use spread footings for the bridge foundations.**

Overall Rating: **DIS**

Attributes	*Rating*	*Comments*
Environmental Impacts	Degraded	More temporary according to the COE.
Construction Impacts	Degraded	Cofferdams would be required.

General comments: Could use as bid alternative.

E-1: **Modify the drainage/treatment basin to reduce maintenance.**

Overall Rating: **DIS**

Attributes	*Rating*	*Comments*

General comments: No design has been completed on this at this point.

CM-4: **Shutdown the roadway, build a new bridge in place of the old, use an extended detour.**

Overall Rating: **DIS**

Attributes	*Rating*	*Comments*
Mainline Operations	Degraded	Major disruption in traffic.
Environmental Impacts	Degraded	

General comments: Shutting down SR 53 is not acceptable although it clearly would speed construction and reduce cost.

VALUE ENGINEERING PROCESS

A systematic approach is used in the VE study. The key procedures followed were organized into three distinct parts: (1) Pre-Study Preparation, (2) VE Study, and (3) Post-Study Procedures.

PRE-STUDY PREPARATION

In preparation for the VE study, the team leader reviews critical aspects of the project and areas for improvement. In the week prior to the start of the VE study, the VE team reviews the documents provided by the designer to become better prepared for the study. In addition, performance attributes and requirements are initially identified that are relevant to the project.

VE STUDY

The Value Methodology (VM) Job Plan is followed to guide the teams in the consideration of project functionality and performance, potential schedule issues, high cost areas, and risk factors in the design. These considerations are taken into account in developing alternative solutions for the optimization of project value. The Job Plan phases are:

- Information Phase
- Function Phase
- Speculation Phase
- Evaluation Phase
- Development Phase
- Presentation Phase

Information Phase

At the beginning of the VE study, the design team presents a more detailed review of the design and the various systems. This includes an overview of the project and its various requirements, which further enhances the VE team's knowledge and understanding of the project. The project team also responds to questions posed by the VE team.

The project’s performance requirements and attributes are discussed, and the performance of the baseline concept is evaluated.

Function Phase

Key to the VE process is the function analysis techniques used during the Function Phase. Analyzing the functional requirements of a project is essential to assuring an owner that the project has been designed to meet the stated criteria and its need and purpose. The analysis of these functions in terms cost, performance, time and risk is a primary element in a VE study, and is used to develop alternatives. This procedure is beneficial to the VE team, as it forces the participants to think in terms

of functions and their relative value in meeting the project's need and purpose. This facilitates a deeper understanding of the project.

Speculation Phase

The Speculation Phase involves identifying and listing creative ideas. During this phase, the VE team participates in a brainstorming session to identify as many means as possible to provide the necessary project functions. Judgment of the ideas is not permitted in order to generate a broad range of ideas.

The idea list includes all of the ideas suggested during the study. These ideas should be reviewed further by the project team, since they may contain ideas that are worthy of further evaluation and may be used as the design develops. These ideas could also help stimulate additional ideas by others.

Evaluation Phase

The purpose of the Evaluation Phase is to systematically assess the potential impacts of ideas generated during the Speculation Phase relative to their potential for value improvement. Each idea is evaluated in terms of its potential impact to performance, cost, time and risk. Once each idea is fully evaluated, it is given a total rating number. This is based on a scale of 1 to 7, as indicated by the following rating index.

7 = Major Value Improvement 6 = Moderate Value Improvement 5 = Minor Value Improvement 4 = Possible Value Improvement	These ratings represent the subjective opinion of the VE team regarding the potential benefits of the concepts in order to prioritize them for development.
3 = Minor Value Degradation	Concept results in a minor cost or performance improvement at the expense of the other.
2 = Moderate Value Degradation	Concept reduces cost but creates an unacceptable degradation to performance.
1 = Major Value Degradation	Concept is not technically feasible or does not meet project need and purpose.

Ideas rated 4 to 7 are developed further and those found to have the greatest potential for value improvement are documented in the *VE Alternatives* section of this report.

Development Phase

During the Development Phase, the highly rated ideas are expanded and developed into VE alternatives. The development process considers the impact to performance, cost, time, and risk of the alternative concepts relative to the baseline concept. This analysis is prepared as appropriate for each alternative, and the information may include a performance assessment, initial cost, and life-cycle cost comparisons, schedule analysis, and an assessment of risk. Each alternative describes the baseline concept and proposed changes and includes a technical discussion. Sketches and calculations are also prepared for each alternative as appropriate.

Presentation Phase

The VE study concludes with a preliminary presentation of the VE team's assessment of the project and VE alternatives. The presentation provides an opportunity for the owner and project team to preview the alternatives and develop an understanding of the rationale behind them.

POST-STUDY PROCEDURES

A *Final VE Study Report* is prepared after the completion of the workshop. This report summarizes the activities and results of the VE study.

VALUE ENGINEERING WORKSHOP AGENDA

Project: CSBRG-0007-00(021), PI No. 0007021, Forsyth & Hall Counties, SR 53 @ Chestatee River

Dates: 05 – 08 December 2011

Location: Georgia Department of Transportation (GDOT)
One Georgia Center
600 West Peachtree Street, NW
Engineering Services Conference Room (404-631-1755), 5th Floor, Rm 5CR1L2
Atlanta, Georgia 30308

GDOT Mr. Matt Sanders, AVS, 404-631-1752 (msanders@dot.ga.gov)

Facilitator: Mr. David Hamilton, PE, CVS-Life, CCE, LEED® AP; 253-229-7703 (dave@vms-inc.com), Value Management Strategies, Inc (VMS)

Value Management Strategies, Inc. (VMS) will conduct a 32-hour Value Engineering (VE) study on the SR 53 @ Chestatee River project in Forsyth and Hall Counties, Georgia. It is expected the GDOT design team will provide a formal presentation concerning the project on the first day of the workshop and be available to answer questions during the VE effort. The VE Study will follow the outline described below.

VE Study Agenda

Monday, 05 December

8:00AM – 0845AM	**VE Team Arrives – Set-up (5th Floor, Engineering Services Conference Room 5CR1L2)**
8:45 AM – 9:00 AM	**Video Conferencing Set-up (if applicable)**
9:00 AM – 12:00 AM	**Kick-off Meeting - General Introductions of All Parties, Review of the VE Process Owner's / Designer's Presentation and Information Phase**

The GDOT design team is expected to present information concerning the project including, but not necessarily limited to: rationale for design, criteria for specific areas of study, project constraints, and the reasons for design decisions.

12:00 Noon – 1:00 PM	**Lunch**

<u>Monday, 05 December</u> (Continued)

1:00 PM – 3:00 PM **Commence Function Analysis Phase (5th Floor, Engineering Services Conference Room 5CR1L2)**

The VE team will continue their familiarization with the cost models and project data for each area of study. The cost model(s) will be refined, as necessary; define the function of each project element or system in the cost model, select the primary or basic functions, and determine the worth, or least cost, to provide the function. In addition, the VE team will continue defining the function of each element/system to gain a thorough understanding of the project's needs and requirements and refine the Function Analysis System Technique (FAST) diagram(s).

3:00 PM – 5:00 PM **Conclude the Function Analysis Phase and Commence the Creative Phase**

The VE team will conduct a brainstorming session and list as many ideas as possible for consideration. The aim is to obtain a large quantity of ideas through free association by eliminating roadblocks to creativity and deferring judgment.

<u>Tuesday, 06 December</u> **(5th Floor, Engineering Services Conference Room 5CR1L2)**

8:00 AM – 10:00 AM **Conclude Creative Phase and Complete Evaluation/Analysis Phase**

The VE team will finalize the brainstorming session and analyze the ideas listed in the creative phase and select the best ideas for further development.

10:00 AM – 12:00 Noon **Development Phase**

The VE team will develop creative ideas into alternate design solutions. Initial and life cycle cost estimates comparing original and proposed alternatives will be prepared. Selected alternatives for change will be developed and supported with sketches, calculations, and written substantiation.

12:00 Noon – 1:00 PM **Lunch**

1:00 PM – 5:00 PM **Continue Development Phase**

<u>Wednesday, 07 December</u> **(5th Floor, Engineering Services Conference Room 5CR1L2)**

8:00 AM – 12:00 Noon **Continue Development Phase**

12:00 Noon – 1:00 PM **Lunch**

1:00 PM – 5:00 PM **Continue Development Phase**

Thursday, 08 December

8:00 AM – 9:00 AM **Conclude Development Phase and Prepare Summary Worksheets for Informal Oral Presentation Continue Development Phase (5th Floor, Engineering Services Conference Room 5CR1L2)**

The VE team prepares a summary of the value engineering alternatives with descriptions and initial and life cycle costs for an informal oral presentation to representatives of the owner and design team. Draft copies of the *Summary of Potential Cost Saving* worksheets are prepared for distribution to VE presentation attendees.

9:00 AM – 11:00 AM **Conduct Informal Presentation (5th Floor, Engineering Services Conference Room 5CR1L2)**

The VE team presents its alternatives to the owner and design team representatives and is available to clarify any points.

11:00 AM **Adjourn**

MEETING ATTENDEES

12/5	12/6	12/7	12/8	Name	Position/Role	Organization	Telephone	E-mail
X	X	X	X	Dave Hamilton	VE Team Leader/Civil	Value Management Strategies, Inc.	253-229-7703	dave@vms-inc.com
X	X	X	X	Dominic Saulino	Constructibility/CM	HNTB	404-946-5745	dsaulino@hntb.com
X	X	X	X	Jim Aitken	Structural	HNTB	404-946-5775	jaitken@hntb.com
X	X	X	X	Lenor Bromberg	Roadway	Kennedy Engineering	678-904-8591 x27	lbromberg@keagroup.com
X			X	Matt Sanders	Value Engineering Specialist	GDOT - Engineering Services	404-631-1752	msanders@dot.ga.gov
X			X	Lisa Myers	Assistant State Project Review Engineer - VE Coordinator	GDOT - Engineering Services	404-631-1956	lmyers@dot.ga.gov
X			X	Al Bowman	Design Project Manager	The LPA Group	770-263-9118	abowman@lpagroup.com
X				Otis Clark	Project Manager	GDOT - Program Delivery	404-631-1577	oclark@dot.ga.gov
X				Ken Werho	Traffic Operations	GDOT	404-635-8144	kwerho@dot.ga.gov
X			X	Bill DuVall	Bridge Design	GDOT	404-631-1883	bduvall@dot.ga.gov
X				Melissa Harper	Construction	GDOT - Construction	404-631-1971	mharper@dot.ga.gov
X			X	Brad Gowen	Design Team	The LPA Group	770-263-9118	bgowen@lpagroup.com
X				Bobby Dollar	Environmental Services	GDOT	404-631-1920	rdollar@dot.ga.gov
X			X	Ron Wishon	Engineering Services	GDOT	404-631-1753	rwishon@dot.ga.gov