Value Engineering Study Report

Georgia Department of Transportation
NHS00-0005-00(320) - P.I. No. 0005320
I-75 Interchange at SR 215
Dooly County

Value Management Team

Design Team

March 27, 2009

March 27, 2009

Ms. Lisa Myers
Design Review Engineer Manager/VE Coordinator
Georgia Department of Transportation-Engineering Services
One Georgia Center
600 W. Peachtree Street NW
Atlanta, GA 30308

RE: Submittal of the final Value Engineering Report
Project No.: NHS00-0005-00(320) - P.I. No. 0005320
I-75 Interchange at SR 215
Dooly County

Dear Ms. Myers:

Please find enclosed two (2) hard copies and one (1) CD of our final Value Engineering Report for the new I-75 Interchange at SR 215, Dooly County.

This Value Engineering Study, which was performed during the period March 16 through March 19, 2009, identified **33 *Alternative Ideas*** of which **11 ideas are recommended for implementation**. We believe that the ***Alternative Ideas*** recommended may have a significant positive affect on the project.

We trust that you will find this report to be in proper order. It should be noted that the results of this workshop are volatile in that they can be overcome by the events that accompany the expeditious continuance of the design process. Accordingly, we encourage an equally expeditious implementation meeting to design the disposition of the contents of this report.

On behalf of our VE Team, we thank you very much for this opportunity to work with you and the hard working staff of the Georgia Department of Transportation.

Yours truly,
PBS&J

Les M. Thomas

Randy S. Thomas

Les M. Thomas, P.E., CVS-Life
VE Team Leader

Randy S. Thomas, CVS
Assistant Team Leader

Value Engineering Study Report

Project No. NHS00-0005-00(320)
P.I. No. 0005320
I-75 Interchange at SR 215
Dooly County

Table of Contents

Executive Summary

Introduction
Project Description
Value Engineering Process
The Study Results
Summary of Alternative and Design Suggestions

Study Results

Introduction
Summary of Alternatives & Design Suggestions
Documentation of Alternative & Design Suggestions

Project Description

Introduction of the Project
Representative Documents

Value Engineering Process

Introduction and Job Plan
Agenda
Function Analysis and Cost–Worth Worksheets
Pareto Cost Model and Graph
Attendance Sheet for Designers and VE Team Presentations
Creative Idea Listing and Evaluation Worksheet

EXECUTIVE SUMMARY

INTRODUCTION

This report summarizes the analysis and conclusions by the PBS&J Value Engineering workshop team as they performed a Value Engineering study during the period of March 16 through March 19, 2009 in Atlanta, at the office of the Georgia Department of Transportation. The subject of the Value Engineering study was Project NHS00-0005-00(320) - P.I. No. 0005320, I-75 Interchange at SR 215, Dooly County.

The design for the project has been prepared by Parsons. At the time of the workshop, the plans had advanced to the preliminary design level.

PROJECT DESCRIPTION

This project consists of modifications to the existing interchange at I-75 and SR 215 east of Vienna in southeastern Dooly County.

The project begins 0.65 miles south of the SR 215 Interchange and ends 0.69 miles north of SR 215 Diamond Interchange. The functional classification for SR 215 is Rural Major Collector.

The modifications currently proposed will replace the current two lane bridge on SR 215 with a three lane bridge with the center lane being a 14-foot wide turn lane. The plans call for the bridge to be constructed parallel and south of the existing bridge. The ramps to I-75 will be reconstructed and lengthened with a terminal spacing of 1,000 feet. This will improve capacity and safety by providing sufficient storage space for vehicles and trucks on the bridge. It will bring the ramp geometry up to current design standards.

The design speed for SR 215 will be 55 mph and ramp speeds will be 45 mph.

The estimated construction costs are $10,340,788 with additional Right-of-Way costs are $11,900,000 and reimbursable utilities costs of $966,800 for a total project cost of $23,744,627.

This project is more fully described in the documentation that is located in the Tabbed section of this report, entitled ***Project Description.***

PROJECT CONCERNS AND OBJECTIVES

Some of the information from the concept report and the designer's presentation indicated the following important points about the project:

- Need to correct I-75 existing deficient elements
- Need to improve intersection safety
- Need to improve line-of-sight
- Need to improve intersection operation

- Need to improve on and off ramp safety

VALUE ENGINEERING PROCESS

The Value Engineering team followed the seven step Value Engineering job plan as promulgated by SAVE International. This seven step job plan includes the following:

- Investigative
- Analysis
- Speculation
- Evaluation
- Development
- Recommendation
- Presentation

This report is a component of the Presentation Phase. As part of the VE workshop in Atlanta, the team made an informal presentation of their results on the last morning of the workshop. This report is intended to formalize the workshop results and set the stage for a formal implementation meeting in which alternatives and design suggestions will typically be accepted, accepted with modifications, or rejected for cause. The worksheet that follows, along with the formally developed alternatives and design suggestions can be used as a "score sheet" for the implementation meeting. It is also included in this report to identify, on a summary basis, the results of the workshop. The reader is encouraged to visit the third tabbed section of this report entitled ***Study Results*** for a review of the details of the developed alternatives. The tabbed section ***Project Description*** includes information about the project itself and the tabbed section ***Value Engineering Process*** presents the detailed process of the Value Engineering Study.

CONCLUSIONS AND RECOMMENDATIONS

During the speculation phase the VE Team identified **33** ***Alternative Ideas*** that appeared to hold potential for reducing the construction cost, improving the end product, and/or reducing the difficulty and time of project construction.

After the evaluation phase was completed, ***11 Alternative Ideas*** remained for further consideration. These Alternative Ideas may be found, in their documented form, in the section of this report entitled ***Study Results***. It is noted that the cost estimate provided to the VE Team indicated that the probable cost of asphalt is $100.00 per ton. Presently the cost has significantly decreased which may affect the significance of our projected savings.

The following ***Summary of Alternatives and Design Suggestions*** coupled with the documentation of the developed alternatives should provide the reader with the information required to fully evaluate the merits of each of the alternatives.

Summary of Alternatives & Design Suggestions

PROJECT: **Georgia Department of Transportation**
NHS00-0005-00(320) – P.I. No. 0005320
I-75 Interchange at SR 215
Dooly County

SHEET NO.: **1** of **1**

ALTERNATIVE NUMBER	DESCRIPTION OF ALTERNATIVE	INITIAL COST SAVINGS
	ROADWAY (RD)	
RD-1	Install signals when warranted	$ 165,452
RD-3	Use 2' inside paved shoulder in-lieu of 4' paved shoulder on ramps	$ 275,233
RD-5	Construct a partial cloverleaf-A	$ 1,603,832
RD-6	Use asphalt in-lieu of concrete on the ramps	$ 473,725
RD-8	Construct Tippettville Road connection as a "T" intersection on both ends	$ 241,560
RD-16	Eliminate area lighting system	$1,650,000
RD-20	Reduce paved shoulder from 6.5' to 4' on SR 215	$146,173
RD-21	Reduce paved shoulder from 6.5' to 2' on SR 215	$263,110
RD-23	Build an upgraded Tight Urban Diamond Interchange (TUDI)	$8,886,331
	BRIDGE (BR)	
BR-1	Use 8' shoulders on the bridge	$140,800
BR-2	Two span bridge with MSE walls (Wall alignment parallel to I-75).	$ 432,575

STUDY RESULTS

INTRODUCTION

This section includes the study results presented in the form of fully developed value engineering alternatives that include descriptions of the original design, description of the alternative design configurations, comments on the technical justifications, opportunities and risks associated with the alternatives, sketches, calculations and technical justification for these alternatives. For the most part, these fully developed alternatives represent an array of choices that clearly could have an impact on the eventual cost and performance of the finished project.

This introductory sheet is followed by a ***Summary of Alternatives and Design Suggestions***. It should be noted that the alternatives that are included, which have cost estimates attached are not necessarily representative of the final cost outcome for each alternative. Some of these alternatives have components that are mutually exclusive so they may not be added together.

The users of this report are asked to consider these alternatives and design suggestions as a smorgasbord of choices for selection and use as the project moves forward. The enclosed ***Summary of Alternatives & Design Suggestions*** may also be used as a "score sheet" within the bounds of an implementation meeting.

COST CALCULATIONS

The cost calculations are intended only as a guide to the approximate results that might be expected from implementation of the alternatives. They should be helpful in making clear choices as to the pursuit of individual alternatives.

The composite mark-up of 10% for the construction cost comparisons was derived from the cost estimate for the project. This estimate can be found in the section of this report entitled ***Project Description.***

Summary of Alternatives & Design Suggestions

PROJECT: **Georgia Department of Transportation**
NHS00-0005-00(320) – P.I. No. 0005320
I-75 Interchange at SR 215
Dooly County

SHEET NO.: **1** of **1**

ALTERNATIVE NUMBER	DESCRIPTION OF ALTERNATIVE	INITIAL COST SAVINGS
	ROADWAY (RD)	
RD-1	Install signals when warranted	$ 165,452
RD-3	Use 2' inside paved shoulder in-lieu of 4' paved shoulder on ramps	$ 275,233
RD-5	Construct a partial cloverleaf-A	$ 1,603,832
RD-6	Use asphalt in-lieu of concrete on the ramps	$ 473,725
RD-8	Construct Tippettville Road connection as a "T" intersection on both ends	$ 241,560
RD-16	Eliminate area lighting system	$1,650,000
RD-20	Reduce paved shoulder from 6.5' to 4' on SR 215	$146,173
RD-21	Reduce paved shoulder from 6.5' to 2' on SR 215	$263,110
RD-23	Build an upgraded Tight Urban Diamond Interchange (TUDI)	$8,886,331
	BRIDGE (BR)	
BR-1	Use 8' shoulders on the bridge	$140,800
BR-2	Two span bridge with MSE walls (Wall alignment parallel to I-75).	$ 432,575

Value Analysis Design Alternative

PROJECT:	**Georgia Department of Transportation** **NHS00-0005-00(320) – P.I. No. 0005320** **I-75 Interchange at SR 215** **Dooly County**	ALTERNATIVE NO.:	**RD-1**
DESCRIPTION:	**Install signals when warranted**	SHEET NO.:	**1** of **3**

Original Design:

The original design proposes signals at the intersection of both sets of ramps and SR-215.

Alternative:

The alternative design would introduce a stop condition at the exit ramp terminals and eliminate the proposed signals.

Opportunities:

- Reduced cost
- Elimination of signal poles from the clear zone
- Eliminate maintenance cost

Risks:

- Minimal design effort

Technical Discussion:

The traffic study indicates that signals will not be warranted until almost the project design year. By eliminating the signals, the capital cost of the original installation will be eliminated in addition to the maintenance and operation costs for the design life of the project.

COST SUMMARY	INITIAL COST	PRESENT WORTH RECURRING COSTS	PRESENT WORTH LIFE-CYCLE COST
ORIGINAL DESIGN	$ 174,442	$ 0	$ 323,217
ALTERNATIVE	$ 0	$ 0	$ 157,765
SAVINGS	$ 174,442	$ 0	$ 165,452

Calculations

PROJECT:	**Georgia Department of Transportation** **NHS00-0005-00(320) – P.I. No. 0005320** **I-75 Interchange at SR 215** **Dooly County**	ALTERNATIVE NO.:	**RD-1**
DESCRIPTION:	**Install signals when warranted**	SHEET NO.:	**2** of **3**

Assumptions:

Installation, yearly maintenance and yearly timing costs were developed using recommendations from Mr. Ernie Cochran.

Signals will be installed after year 15.

Signal installation – 2 @ $80,000 each + 10,000 interconnect => $170,000

Maintenance – (electricity, bulbs, incidental damage) => $2,500 / year

Timing – 2 @ 7,500 each = $15,000/bi-annually => use $7,500 per year

LIFE CYCLE COST WORKSHEET

PROJECT: **NHS00-0005-00(320) – P.I. No. 0005320**
I-75 Interchange at SR 215
Dooly County
Install signals when warranted

ALTERNATIVE NO. **RD-1**

SHEET NO. **3 of 3**

LIFE CYCLE PERIOD:		20	**years**				**Signals ORIGINAL**	**Signals PROPOSED**
INTEREST RATE:		3.00%	**ESCALATION RATE:**		0.00%			
A.	**INITIAL COST**						$174,442	$0
	Useful Life (Years)						20	20
						INITIAL COST SAVINGS		$174,442
B.	**RECURRENT COSTS (Annual Expenditures)**							
	1.	**Maintenance**	electricity, bulbs, incidental damage		1	$2,500	$ 2,500	
	2.	**Maintenance**	electricity, bulbs, incidental damage		0	$2,500		$ -
	3.	**Maintenance**	timing		1	$7,500	$ 7,500	
	4.	**Maintenance**	timing		0	$7,500		$ -
	5.	**Maintenance**	electricity, bulbs, incidental damage		1	$2,500	$ -	$ 2,500
	6.	**Maintenance**	timing		1	$7,500	$ -	$ 7,500
						Total Annual Costs	10,000	10,000
						Present Worth Factor	14.8775	4.5797
						Present Worth of RECURRENT COSTS	148,775	45,797
C.	**SINGLE EXPENDITURES**			**Year**	**Amount**	**PW factor**	**Present Worth**	**Present Worth**
ORIG	PROP	**< Put "x" in appropriate box (original design or proposed design)**						
	x	**1.**	**Install Signal**	15	$174,442	0.6419	$ -	$ 111,968
x		**2.**		15		0.6419	$ -	$ -
x		**3.**				1.0000	$ -	$ -
	x	**4.**				1.0000	$ -	$ -
x		**4.**				1.0000	$ -	$ -
x		**5.**				1.0000	$ -	$ -
		6.				1.0000	$ -	$ -
		7.				1.0000	$ -	$ -
		8.				1.0000	$ -	$ -
D.	**SALVAGE VALUE**			**Year**	**Amount**	**PW factor**	**Present Worth**	**Present Worth**
	x	**1.**				1.0000	-	-
		2.				1.0000	-	-
						Present Worth of SINGLE EXPENDITURES	$0	$111,968
E.	**Total Recurrent Costs & Single Expenditures (B + C + D)**						$148,775	$157,765
						RECURRENT COSTS & SINGLE EXPENDITURES SAVINGS		($8,990)
						TOTAL PRESENT WORTH COST (A + E)	$323,217	$157,765
						TOTAL LIFE CYCLE SAVINGS		**$165,452**

Value Analysis Design Alternative

PROJECT:	**Georgia Department of Transportation** **NHS00-0005-00(320) – P.I. No. 0005320** **I-75 Interchange at SR 215** **Dooly County**	ALTERNATIVE NO.:	**RD-3**
DESCRIPTION:	**Use 2' inside paved shoulder in-lieu of 4' paved shoulder on ramps**	SHEET NO.:	**1** of **4**

Original Design:

The original design provides for a 12' outside shoulder with 10' paved.

Alternative:

The alternative would provide a 6' improved inside shoulder with 2' paved on the ramps.

Opportunities:

- Reduce required paving
- Conform to AASHTO recommendations

Risks:

- Minimal design effort

Technical Discussion:

AASHTO policy makes the recommendation that when providing paved shoulders on ramps, "For one way operation, the sum of the right and left shoulders should not exceed 10' to 12'.(AASHTO: A Policy on Geometric Design of Highways and Streets 2004, page 838, bullet #1). By providing excess shoulder width, it will encourage parking on the ramps and attempts to use this wider paving as an additional travel lane.

COST SUMMARY	INITIAL COST	PRESENT WORTH RECURRING COSTS	PRESENT WORTH LIFE-CYCLE COST
ORIGINAL DESIGN	$ 2,624,426	$ 0	$ 2,624,426
ALTERNATIVE	$ 2,349,193	$ 0	$ 2,349,193
SAVINGS	$ 275,233	$ 0	$ 275,233

Illustration

PROJECT:	**Georgia Department of Transportation** **NHS00-0005-00(320) – P.I. No. 0005320** **I-75 Interchange at SR 215** **Dooly County**	ALTERNATIVE NO.:	**RD-3**
DESCRIPTION:	**Use 2' paved inside paved shoulder in-lieu of 4' paved shoulder on ramps**	SHEET NO.:	**2** of **4**

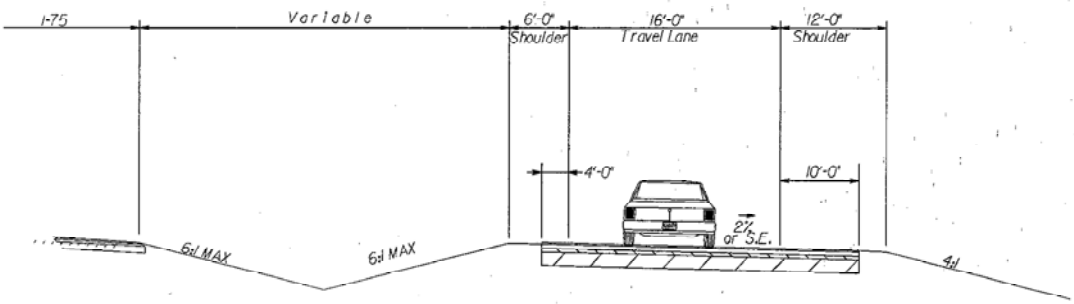

Ramp Typical Section

Proposed

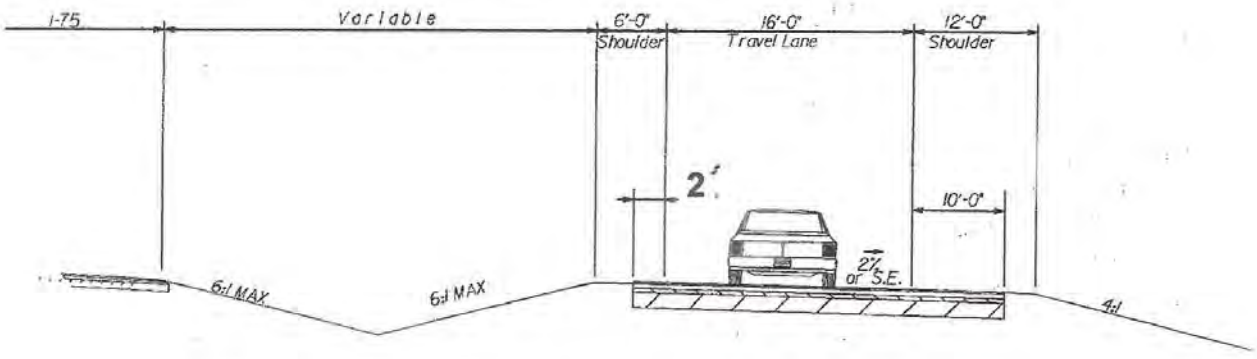

Ramp Typical Section

Alternative

Calculations

PROJECT:	**Georgia Department of Transportation** **NHS00-0005-00(320) – P.I. No. 0005320** **I-75 Interchange at SR 215** **Dooly County**	ALTERNATIVE NO.:	**RD-3**
DESCRIPTION:	**Use 2' inside paved shoulder in-lieu of 4' paved shoulder on ramps**	SHEET NO.:	**3** of **4**

REDUCED PAVEMENT AREA: Concrete Pavement

Ramp A = Station 300+00 to Station 326+62 = 2662 lf
Ramp B = Station 400+00 to Station 441+98 = 4198 lf
Ramp C = Station 600+00 to Station 627+34 = 2734 lf
Ramp D = Station 505+00 to Station 539+56 = 3456 lf
13050 lf total

(2662'+4198'+2734'+3456') = 13050 x 2'/ (9sf/sy) = 2900 sy concrete pavement saved.
G.A.B.- 2900 SY saved

If asphalt shoulders are proposed, below are the pavement build-up assumptions and reductions.

Asphalt assumptions:
Assume build-up of:
A.660lb/sy -25mm Superpave
B.330lb/sy -19mm Superpave
C.165lb/sy -9.5mm Superpave(12.5mm Superpave would likely be a more suitable wearing surface)

Asphalt Reductions:

A. 660lb/sy x 2900sy/2000=957 tons saved

B. 330lb/sy x 2900sy/2000=479 tons saved

C. 165lb/sy x 2900sy/2000=239 tons saved

D. GAB= 2900 SY saved

Asphalt costs-

A.957 tons x $100/ton= $95,700

B.479 tons x $100/ton=$47,900

C.239 tons x $100/ton=$23,900

D.2900 SY x $19.91/SY=$57,739

Grand Total Asphalt Savings Alternative=$225,239

Cost Worksheet

PBSJ

PROJECT:	**Georgia Department of Transportation** **NHS00-0005-00(320) - P.I. No. 0005320** **I-75 Interchange at SR 215** **Dooly County**	ALTERNATIVE NO.:	**RD-3**
DESCRIPTION:	**Use 2' inside paved shoulders in-lieu of 4' paved shoulder on ramps**	SHEET NO.:	**4** of **4**

CONSTRUCTION ITEM		ORIGINAL ESTIMATE			PROPOSED ESTIMATE		
ITEM	UNITS	NO. OF UNITS	COST/ UNIT	TOTAL	NO. OF UNITS	COST/ UNIT	TOTAL
439-0026- Plain PC Conc Pavt	SY	23,968	$ 66.37	$ 1,590,756	21,068	$ 66.37	$ 1,398,283
310-5120- GAB 12", inc mat'l	SY	39,934	$ 19.91	$ 795,086	37,034	$ 19.91	$ 737,347
Sub-total				$ 2,385,842			$ 2,135,630
Mark-up at 10.00%				$ 238,584			$ 213,563
TOTAL				**$ 2,624,426**			**$ 2,349,193**
Estimated Savings:							$275,233

Value Analysis Design Alternative

PROJECT:	**Georgia Department of Transportation** **NHS00-0005-00(320) – P.I. No. 0005320** **I-75 Interchange at SR 215** **Dooly County**	ALTERNATIVE NO.:	**RD-5**
DESCRIPTION:	**Construct a Parclo-A**	SHEET NO.:	**1** of **5**

Original Design:

The original design proposes constructing a conventional Spread Diamond Interchange.

Alternative:

The proposed alternative would be to construct a Type-A Partial Cloverleaf and offsetting the roadway slightly to the north.

Opportunities:

- Minor reduction in pavement cost
- Reduction in required Right of Way
- Reduction in displacements
- Eliminate impact to drainage structure

Risks:

- Minimal increase in design effort
- Increase in bridge cost
- Moderate impacts to construction sequence

Technical Discussion:

The preliminary design only considered one configuration with any loop ramps which was in the southwest quadrant. By making the loop ramp an exit off of I-75 this would dictate a High Range (75% design speed) design for the loop ramps. By utilizing a Parclo – A, it will make the loop ramps entrances to the high speed roadway allowing the use of a “Lower Range (50% design speed)” design.

COST SUMMARY	INITIAL COST	PRESENT WORTH RECURRING COSTS	PRESENT WORTH LIFE-CYCLE COST
ORIGINAL DESIGN	$ 2,304,972	$ 0	$ 2,304,972
ALTERNATIVE	$ 701,140	$ 0	$ 701,140
SAVINGS	$ 1,603,832	$ 0	$ 1,603,832

Illustration

PROJECT:	**Georgia Department of Transportation** **NHS00-0005-00(320) – P.I. No. 0005320** **I-75 Interchange at SR 215** **Dooly County**	ALTERNATIVE NO.:	**RD-5**
DESCRIPTION:	**Construct a partial Clover leaf - A**	SHEET NO.:	**2** of **5**

Original Design:

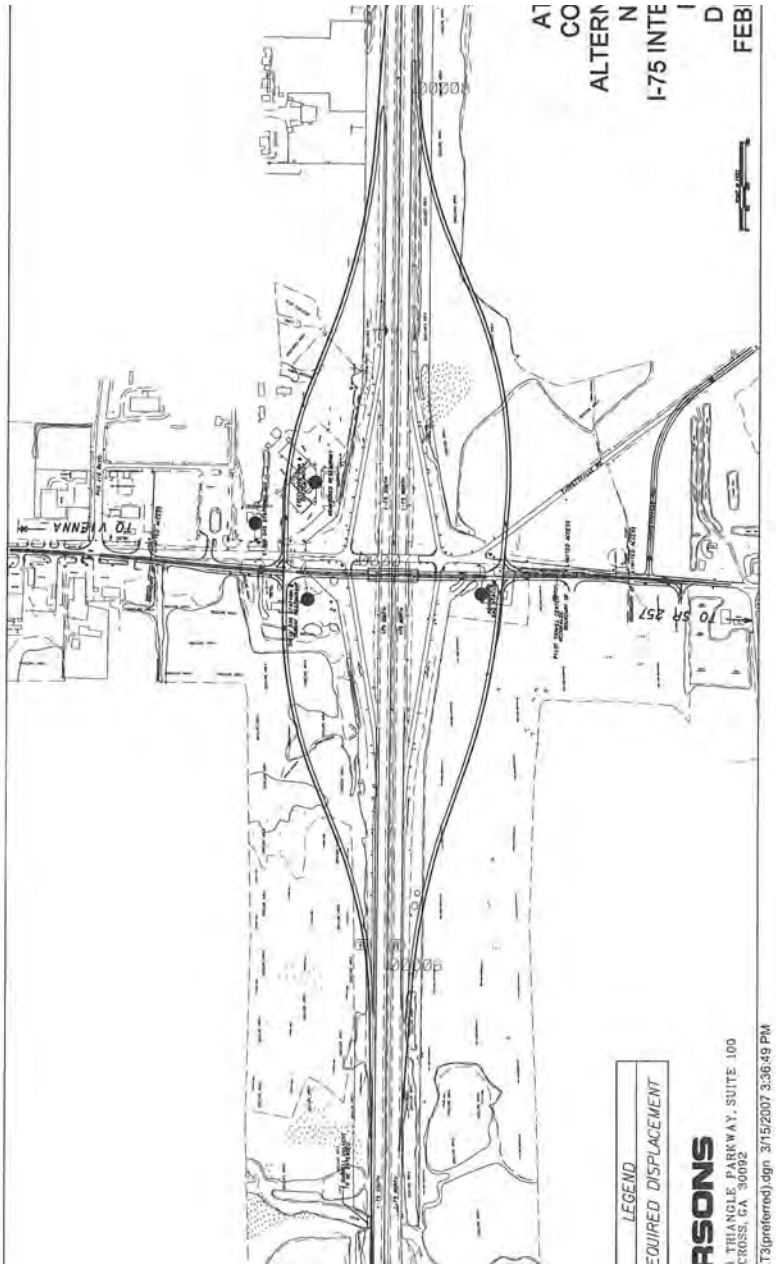

Illustration

PROJECT:	**Georgia Department of Transportation** **NHS00-0005-00(320) – P.I. No. 0005320** **I-75 Interchange at SR 215** **Dooly County**	ALTERNATIVE NO.:	**RD-5**
DESCRIPTION:	**Construct a partial Clover leaf - A**	SHEET NO.:	**3** of **5**

Alternative Design

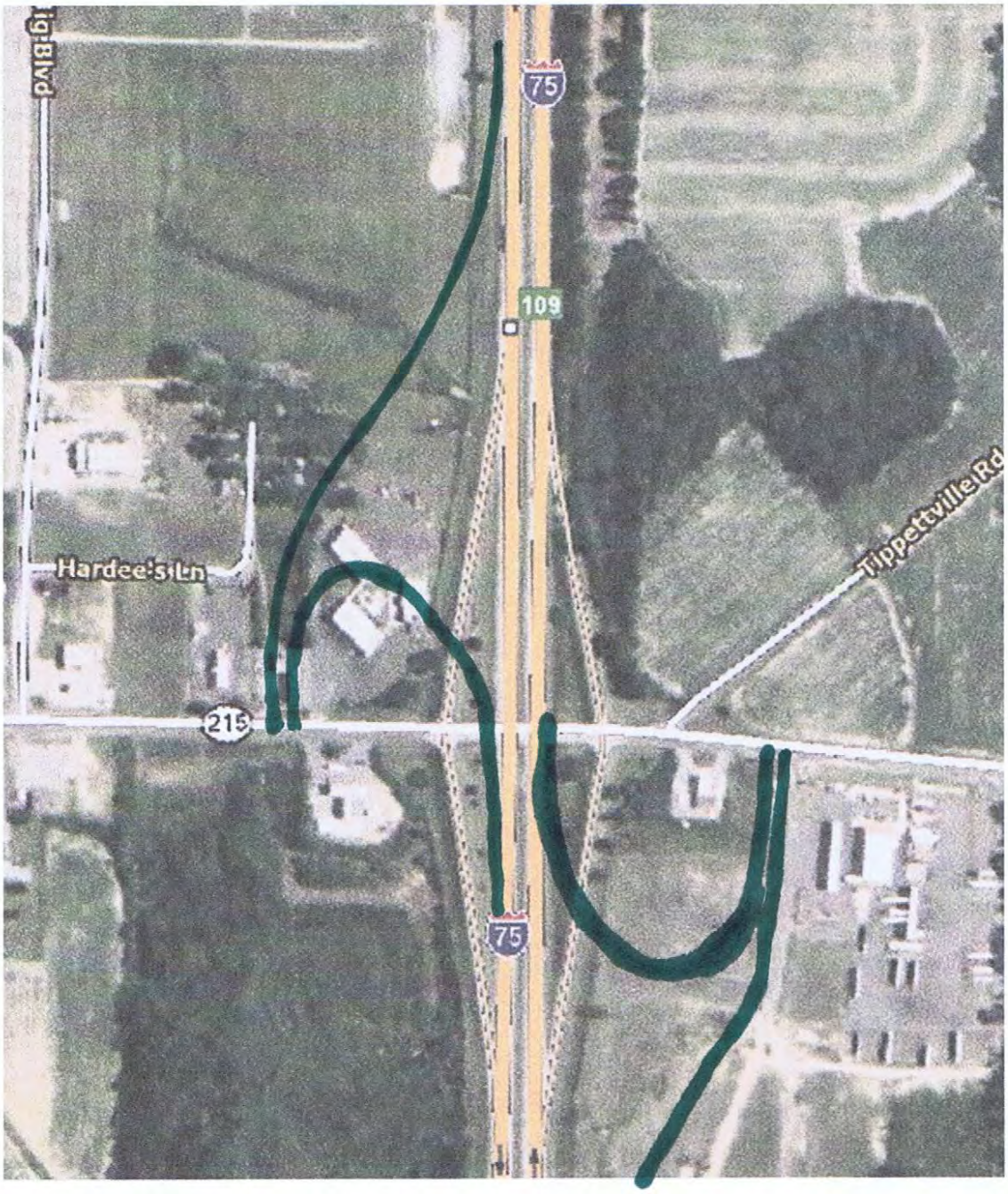

Calculations

PROJECT:	**Georgia Department of Transportation** **NHS00-0005-00(320) – P.I. No. 0005320** **I-75 Interchange at SR 215** **Dooly County**	ALTERNATIVE NO.:	**RD-5**
DESCRIPTION:	**Construct a Parclo-A**	SHEET NO.:	**4** of **5**

Increased Bridge Cost:

Assume an additional 24' length of bridge to accommodate the loop ramps.

(24' length x 57.25' width) = 1,374 SF

Assume an additional $500,000 for increased cost for Maintenance of Traffic

Box Culvert:

From the estimate – 120 CY Class A concrete and 13,381 Reinforcing Steel.

Reduction in Right of Way:

Eliminate the right of way in the northeast and southwest quadrant. Include an additional strip 1000' long by an average of 100' wide to accommodate the loops in the south east and northwest quadrants (20% commercial / 80% agricultural).

R.O.W. added- (1000' x 100') x 2 = 200,000 SF / 43,560 / AC = 4.59 AC => 3.67 AC agricultural ; 0.92 AC commercial

R.O.W. reduced / NE - 2000' length x 225' average width (100% agricultural)= 450,000 SF / (43,560 SF / AC) => 10.33 AC agricultural

R.O.W. reduced / SW - 1700' length x 160' average width (20% commercial / 80% agricultural)= 272,000 SF / (43,560 SF / AC) = 6.24 AC => 4.99 AC agricultural ; 1.25 AC commercial

Commercial – 1.25 AC – 0.92 AC = 0.33 AC x $175,000/ AC = $57,750

Agricultural – 10.33 AC + 4.99 AC – 3.67 AC = 11.65 AC x $ 5,000 = $58,250

Assume savings of ¼ of improvements => 0.25 x $2,592,000 = $648,000

Assume savings of ¼ of relocations => 0.25 x $100,000 = $25,000

Total = $789,000

Right of way:

Net cost	=	$789,000
Scheduling @ 55%	=	$ 433,950
Court cost @ 60%	=	$ 473,400
Appreciation @ 40%	=	$ 315,600
Total	=	$2,011,950

Cost Worksheet

PBS&J

PROJECT: **Georgia Department of Transportation**
NHS00-0005-00(320) - P.I. No. 0005320
I-75 Interchange at SR 215
Dooly County

ALTERNATIVE NO.: **RD-05**

DESCRIPTION: **Construct a Parclo-A**

SHEET NO.: **5** of **5**

CONSTRUCTION ITEM		ORIGINAL ESTIMATE			PROPOSED ESTIMATE		
ITEM	UNITS	NO. OF UNITS	COST/ UNIT	TOTAL	NO. OF UNITS	COST/ UNIT	TOTAL
Class A Concrete	CY	120	$ 586.16	$ 70,339	0	$ 586.16	$ -
Steel Reinforcing	LB	13,831	$ 0.95	$ 13,139	0	$ 100.00	$ -
Bridge	SF	0	$ 100.00	$ -	1,374	$ 100.00	$ 137,400
Right of Way	LS	1	$ 2,011,950	$ 2,011,950	0	$ -	$ -
Maintenance of Traffic	LS	0		$ -	1	$ 500,000	$ 500,000
Sub-total				$ 2,095,429			$ 637,400
Mark-up at 10.00%				$ 209,543			$ 63,740
TOTAL				**$ 2,304,972**			**$ 701,140**
Estimated Savings:							$1,603,832

Value Analysis Design Alternative

PROJECT:	**Georgia Department of Transportation** **NHS00-0005-00(320) – P.I. No. 0005320** **I-75 Interchange at SR 215** **Dooly County**	ALTERNATIVE NO.:	**RD-6**
DESCRIPTION:	**Use asphalt in-lieu of concrete on the ramps**	SHEET NO.:	**1** of **4**

Original Design:

The original design proposes constructing the ramps on the project with PCC.

Alternative:

The alternative proposes constructing the ramps with asphalt in-lieu of PCC.

Opportunities:

- Lower initial costs
- Reduces construction time

Risks:

- Shortened maintenance cycles due to truck traffic
- Minor design impacts

Technical Discussion:

The alternative proposes using asphalt to construct the proposed ramps on the project. Typically, concrete is preferred for interstate ramp construction, but this alternative was pursued due to low opening and design year traffic counts(7900-2005 ADT; 17,000-2033 ADT). It is noted that the truck percentage is 14%, but with the lower ADT range, it appears to be a viable alternative, generating $473,725 in first cost savings. It is also noted that 12.5mm Superpave would be a preferred wearing surface throughout the project.

COST SUMMARY	INITIAL COST	PRESENT WORTH RECURRING COSTS	PRESENT WORTH LIFE-CYCLE COST
ORIGINAL DESIGN	$ 4,320,540	$ 0	$ 4,320,540
ALTERNATIVE	$ 3,846,815	$ 0	$ 3,846,815
SAVINGS	$ 473,725	$ 0	$ 473,725

Illustration

PROJECT:	**Georgia Department of Transportation** **NHS00-0005-00(320) – P.I. No. 0005320** **I-75 Interchange at SR 215** **Dooly County**	ALTERNATIVE NO.:	**RD-6**
DESCRIPTION:	**Use asphalt in-lieu of concrete on the ramps**	SHEET NO.:	**2** of **4**

Original design using PCC for ramp construction

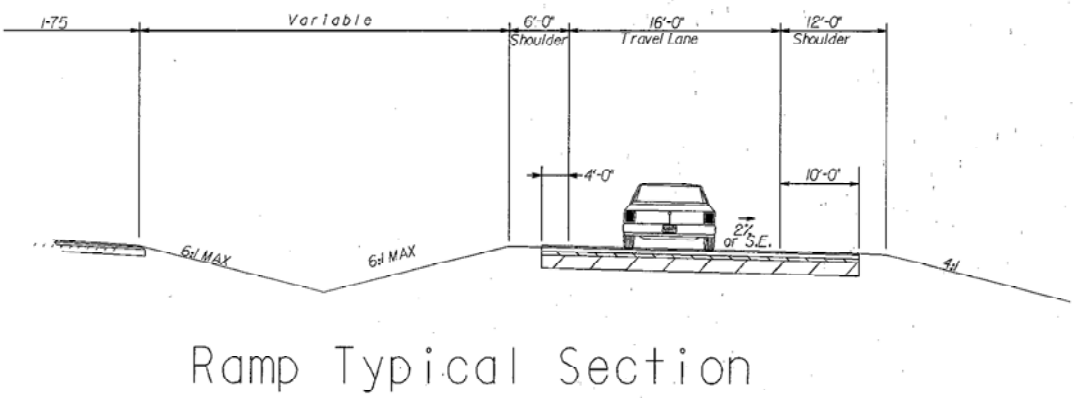

Alternate design proposes using asphalt for ramp construction

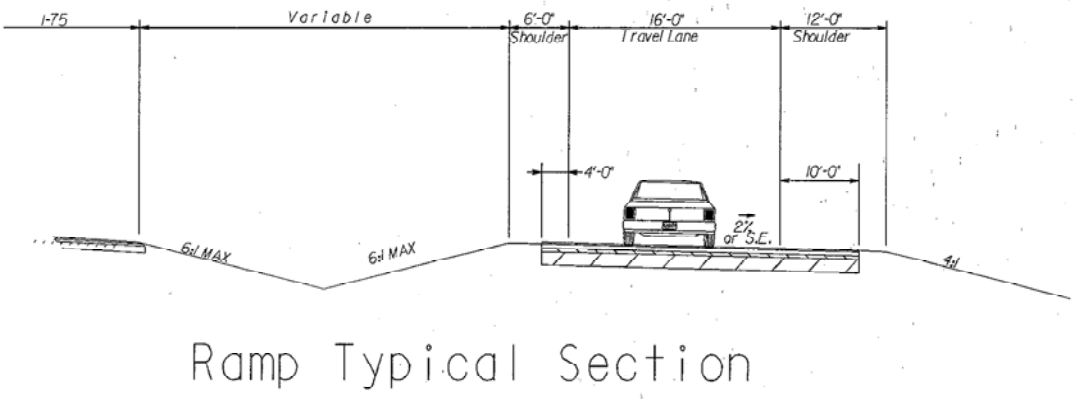

Asphalt build-up assumed:
-165lb/sy 12.5mm Superpave
-330lb/sy 19mm Superpave
-660lb/sy 25mm Superpave

Calculations

PROJECT:	**Georgia Department of Transportation** **NHS00-0005-00(320) – P.I. No. 0005320** **I-75 Interchange at SR 215** **Dooly County**	ALTERNATIVE NO.:	**RD-6**
DESCRIPTION:	**Use asphalt in-lieu of concrete on the ramps**	SHEET NO.:	**3** of **4**

Mainline ramp area calculations:

Ramp A = Station 300+00 to Station 326+62 = 2,662 lf
Ramp B = Station 400+00 to Station 441+98 = 4,198 lf
Ramp C = Station 600+00 to Station 627+34 = 2,734 lf
Ramp D = Station 505+00 to Station 539+56 = 3,456 lf
13,050 lf total

16' ramp travel lane-

-(2662'+4198'+2734'+3456') = 13,050 x 16'/ (9sf/sy) = 23,200 sy concrete pavement saved.
-G.A.B.- 23200 SY reduction
-Construct ramp shoulders with 8" GAB in lieu of 12" GAB.
-Use 8" GAB for ramp travel way base in lieu of 12" GAB.
-Convert all 12" GAB proposed area into 8" GAB for alternate.

Asphalt assumptions:
Assume build-up of:

A.660lb/sy 25mm Superpave
B.330lb/sy 19mm Superpave
C.165lb/sy 9.5mm Superpave(12.5mm Superpave would likely be a more suitable wearing surface)

Asphalt Calculations:

A.23,200sy x 660lb/sy/2,000=7,656 ton increase 25mm Superpave
B.23,200sy x 330lb/sy/2,000= 3,828 ton increase 19mm Superpave
C.23,200sy x 165lb/sy/2,000=1,914 ton increase 9.5mm Superpave

Cost Worksheet

PBSJ

PROJECT: **Georgia Department of Transportation**
NHS00-0005-00(320) - P.I. No. 0005320
I-75 Interchange at SR 215
Dooly County

ALTERNATIVE NO.: **RD-6**

DESCRIPTION: **Use asphalt in-lieu of concrete on the ramps**

SHEET NO.: **4** of **4**

CONSTRUCTION ITEM		ORIGINAL ESTIMATE			PROPOSED ESTIMATE		
ITEM	UNITS	NO. OF UNITS	COST/ UNIT	TOTAL	NO. OF UNITS	COST/ UNIT	TOTAL
439-0026- Plain PC Conc Pavt	SY	23,968	$ 66.37	$ 1,590,756	0	$ 66.37	$ -
310-5120- GAB 12", inc mat'l	SY	39,934	$ 19.91	$ 795,086	0	$ 19.91	$ -
				$ -			$ -
310-5080- GAB 8", inc. mt'l	SY	18,723	$15.41	$ 288,521	58,657	$ 15.41	$ 903,904
402-3121- 25mm Superpave	TN	6,094	$ 100.00	$ 609,400	13,750	$ 100.00	$ 1,375,000
402-3190- 19mm Superpave	TN	4,570	$ 100.00	$ 457,000	8,398	$ 100.00	$ 839,800
402-3131- 9.5mm Superpave	TN	1,870	$ 100.00	$ 187,000	3,784	$ 100.00	$ 378,400
Sub-total				$ 3,927,764			$ 3,497,104
Mark-up at 10.00%				$ 392,776			$ 349,710
TOTAL				**$ 4,320,540**			**$ 3,846,815**
Estimated Savings:							$473,725

Value Analysis Design Alternative

PROJECT:	**Georgia Department of Transportation** **NHS00-0005-00(320) – P.I. No. 0005320** **I-75 Interchange at SR 215** **Dooly County**	ALTERNATIVE NO.:	**RD-8**
DESCRIPTION:	**Construct Tippettville Road connection as a T-Intersection on both ends**	SHEET NO.:	**1** of **4**

Original Design:

The original design proposes to tie Tippettville Road to SR-215 by re-aligning Tippettville Road utilizing a curve (~45^ deflection) in the alignment to form a T-intersection at SR-215.

Alternative:

The proposed alternative would tie Tippettville Road to SR-215 utilizing a connecting road with a T-intersection on either end. The connecting road would also be shifted to the south to align the connection at SR-215 with the most easterly drive of the Pilot Truck Stop.

Opportunities:

- Reduction in pavement cost
- Reduced impact to historical resources
- Improved management of access on SR-215
- Elimination of unusable remainder of right-of-way
- Elimination of any right-of-way taking from the historical property
- Reduction in required right-of-way

Risks:

- Minimal increase in design effort
- An indirect route for local traffic

Technical Discussion:

By using a “connecting road” it will allow the elimination of an unusable remainder of right-of way. In addition this will eliminate any right-of-way taking from the historical property. The only notable negative impact will be requiring the thru traffic between SR-215 and Tippettville Road to make a turn.

COST SUMMARY	INITIAL COST	PRESENT WORTH RECURRING COSTS	PRESENT WORTH LIFE-CYCLE COST
ORIGINAL DESIGN	$ 241,560	$ 0	$ 241,560
ALTERNATIVE	$ 0	$ 0	$ 0
SAVINGS	$ 241,560	$ 0	241,560

Illustration

PROJECT:	**Georgia Department of Transportation** **NHS00-0005-00(320) – P.I. No. 0005320** **I-75 Interchange at SR 215** **Dooly County**	ALTERNATIVE NO.:	**RD-8**
DESCRIPTION:	**Construct Tippettville Road connection as a "T" intersection on both ends**	SHEET NO.:	**2** of **4**

Current Design:

Alternative Design:

Calculations

PROJECT:	**Georgia Department of Transportation** **NHS00-0005-00(320) – P.I. No. 0005320** **I-75 Interchange at SR 215** **Dooly County**	ALTERNATIVE NO.:	**RD-8**
DESCRIPTION:	**Construct Tippettville Road connection as a T-Intersection on both ends**	SHEET NO.:	**3** of **4**

Reduction in Pavement:

Assume a buildup of 165#/SY Surface, 330#/SY Base Layer and 8" G.A.B.

Length of roadway = 500 LF, Width of roadway = (2'+12'+12'+2') = 28 LF

Total Area = (500 LF x 28 LF) / (9 SF / SY) = 1555.6 SY

Superpave 9.5mm = (1555.6 SY x (165#/SY) / (2000#/TN) = 128.3 TN => 128 TN

Superpave 25.0mm = (1555.6 SY x (330#/SY) / (2000#/TN) = 256.7 TN => 257 TN

8" GAB => 1556 SY

Reduction in Right of Way:

Unusable remainder – 650' length x 100' average width = 65,000 SF

Reduced length along existing – 500' length x (100' width prop. – 60' width exist.) = 20,000 SF

Total = 85,000 SF / (43,560 SF / AC) => 2 AC

Net Cost- 2 AC x ($5,000 / AC) = $10,000

Right of way: Net cost	=	$10,000
Scheduling @ 55%	=	$ 5,500
Court cost @ 60%	=	$ 6,000
Appreciation @ 40%	=	$ 4,000
Total	=	$ 25,500

Cost Worksheet

PBSJ

PROJECT:	**Georgia Department of Transportation** **NHS00-0005-00(320) - P.I. No. 0005320** **I-75 Interchange at SR 215** **Dooly County**	ALTERNATIVE NO.:	**RD-08**
DESCRIPTION:	**Construct Tippettville Road connection as a T-Intersection on both ends**	SHEET NO.:	**4** of **4**

CONSTRUCTION ITEM		ORIGINAL ESTIMATE			PROPOSED ESTIMATE		
ITEM	UNITS	NO. OF UNITS	COST/ UNIT	TOTAL	NO. OF UNITS	COST/ UNIT	TOTAL
12.5mm Superpave	TN	128	$ 100	$ 12,800	0	$ 100	$ -
25.0 mm Superpave	TN	257	$ 100	$ 25,700	0	$ 100	$ -
8" G.A.B.	SY	1,556	$ 100	$ 155,600	0	$ 100	$ -
Right of Way	LS	1	$ 25,500	$ 25,500	0	$ -	$ -
Sub-total				$ 219,600			$ -
Mark-up at 10.00%				$ 21,960			$ -
TOTAL				**$ 241,560**			**$ -**
Estimated Savings:							$241,560

Value Analysis Design Alternative

PROJECT:	**Georgia Department of Transportation** **NHS00-0005-00(320) – P.I. No. 0005320** **I-75 Interchange at SR 215** **Dooly County**	ALTERNATIVE NO.:	**RD-16**
DESCRIPTION:	**Eliminate area lighting system**	SHEET NO.:	**1** of **3**

Original Design:

The original design calls for construction of high mast lighting to illuminate the intersection of SR 215 at I-75.

Alternative:

The alternative proposes eliminating the high mast lighting for this project.

Opportunities:

- Initial cost savings by eliminating unit items
- Reduced construction time

Risks:

- Minimal design impacts

Technical Discussion:

The project is sited in a rural location, and the anticipated cost of installation will be approximately $1,650,000 after the appropriate mark-ups, representing approximately 10% of the overall project construction cost. It is reasonable to not provide this class of lighting in rural areas unless there are special needs identified.

COST SUMMARY	INITIAL COST	PRESENT WORTH RECURRING COSTS	PRESENT WORTH LIFE-CYCLE COST
ORIGINAL DESIGN	1,650,000	$ 0	$ 1,650,000
ALTERNATIVE	$ 0	$ 0	$ 0
SAVINGS	$ 1,650,000	$ 0	$ 1,650,000

Calculations

PROJECT:	**Georgia Department of Transportation** **NHS00-0005-00(320) – P.I. No. 0005320** **I-75 Interchange at SR 215** **Dooly County**	ALTERNATIVE NO.:	**RD-16**
DESCRIPTION:	**Eliminate area lighting system**	SHEET NO.:	**2** of **3**

Assumptions:

-Eliminate the proposed high mast lighting in its entirety. Costs are derived from the estimate enclosed in the concept report.

-Line item for 683-9999- "High Mast Lighting" is a LS item @ $1,500,000. A 10% mark-up is included in the cost worksheet attached to bring the final price to $1,650,000.

Cost Worksheet

PBSJ

PROJECT: **Georgia Department of Transportation**
NHS00-0005-00(320) - P.I. No. 0005320
I-75 Interchange at SR 215
Dooly County

ALTERNATIVE NO.: **RD-16**

DESCRIPTION: **Eliminate area lighting system**

SHEET NO.: **3** of **3**

CONSTRUCTION ITEM		ORIGINAL ESTIMATE			PROPOSED ESTIMATE		
ITEM	UNITS	NO. OF UNITS	COST/ UNIT	TOTAL	NO. OF UNITS	COST/ UNIT	TOTAL
683-9999- High Mast Lighting	LS	1	$ 1,500,000	$ 1,500,000	0	$1,500,000	$ -
Sub-total				$ 1,500,000			$ -
Mark-up at 10.00%				$ 150,000			$ -
TOTAL				**$ 1,650,000**			**$ -**
Estimated Savings:							$1,650,000

Value Analysis Design Alternative

PROJECT:	**Georgia Department of Transportation** **NHS00-0005-00(320) – P.I. No. 0005320** **I-75 Interchange at SR 215** **Dooly County**	ALTERNATIVE NO.:	**RD-20**
DESCRIPTION:	**Reduce the paved shoulder on SR-215 from 6.5' to 4'**	SHEET NO.:	**1** of **4**

Original Design:

The original design calls for 6.5 foot paved shoulder

Alternative:

The proposed alternative would provide 4 foot paved shoulder

Opportunities:

- Reduction in pavement cost
- Minimal reduction in utility

Risks:

- Minimal increase in design effort

Technical Discussion:

The original design calls for a 6.5 foot paved shoulder, however AASHTO allows a little as a 2 foot paved shoulder (AASHTO, A Policy on Geometric Design of Highways and Streets, page 314) based on the project criteria. A four foot shoulder, free of rumble strips, would provide sufficient width to accommodate pedestrian and bicycle traffic.

COST SUMMARY	INITIAL COST	PRESENT WORTH RECURRING COSTS	PRESENT WORTH LIFE-CYCLE COST
ORIGINAL DESIGN	$ 380,140	$ 0	$ 380,140
ALTERNATIVE	$ 233,967	$ 0	$ 233,967
SAVINGS	$ 146,173	$ 0	$ 146,173

Illustration

PROJECT:	**Georgia Department of Transportation** **NHS00-0005-00(320) – P.I. No. 0005320** **I-75 Interchange at SR 215** **Dooly County**	ALTERNATIVE NO.:	**RD-20**
DESCRIPTION:	**Reduce the paved shoulder on SR-215 from 6.5' to 4'**	SHEET NO.:	**2** of **4**

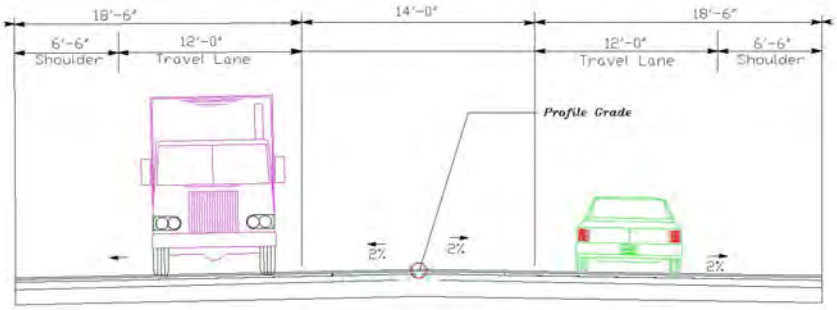

2-12' Lanes Divided with a 14' two way left turn and 6'-6" paved shoulders

CURRENT DESIGN

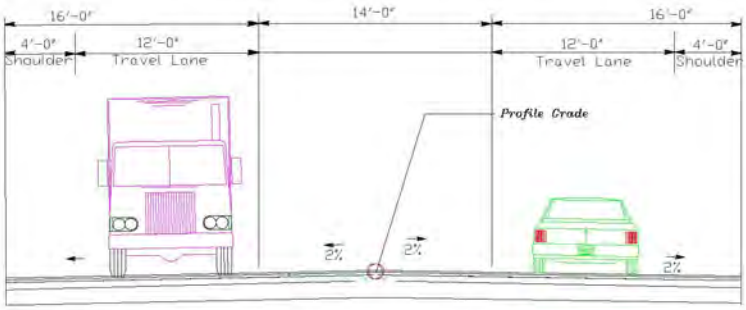

2-12' Lanes Divided with a 14' two way left turn and 4' paved shoulders

Alternate Design

Asphalt build-up assumed:
-165lb/sy 12.5mm Superpave
-330lb/sy 19mm Superpave
-660lb/sy 25mm Superpave

Calculations

PROJECT:	**Georgia Department of Transportation** **NHS00-0005-00(320) – P.I. No. 0005320** **I-75 Interchange at SR 215** **Dooly County**	ALTERNATIVE NO.:	**RD-20**
DESCRIPTION:	**Reduce the paved shoulder on SR-215 from 6.5' to 4'**	SHEET NO.:	**3** of **4**

~Station 703+00 to ~Station 735+70

Original Design:

Length of the roadway = 3270 LF, Width of the Paved Shoulders = (2 x 6.5') 13 LF

Total Area of Paved Shoulder = (3270 LF x 13 LF) / (9 SF / SY) = 4723.3 SY

Superpave 9.5mm = (4723.3 SY * 165/2000) = 389.7 TN => 390TN

Superpave 19.0mm = (4723.3 SY * 330/2000) = 779.3 TN => 779 TN

Superpave 25.0mm = (4723.3 SY * 660/2000) = 1558.7 TN => 1559 TN

8" GAB = 4723.3 SY

Alternative

Length of the roadway = 3270 LF, Width of the Paved Shoulders = (2 x 4.0') 8 LF

Total Area of Paved Shoulder = (3270 LF x 8 LF) / (9 SF / SY) = 2906.7 SY

Superpave 9.5mm = (2906.7 * 165/2000) => 240 TN

Superpave 19.0mm = (2906.7 SY * 330/2000) => 480 TN

Superpave 25.0mm = (2906.7 SY * 660/2000) = >959 TN

8" GAB = 2907 SY

Cost Worksheet

PBSJ

PROJECT:	**Georgia Department of Transportation** **NHS00-0005-00(320) - P.I. No. 0005320** **I-75 Interchange at SR 215** **Dooly County**	ALTERNATIVE NO.:	**RD-20**
DESCRIPTION:	**Reduce the paved shoulder on SR-215 from 6.5' to 4'**	SHEET NO.:	**4** of **4**

CONSTRUCTION ITEM		ORIGINAL ESTIMATE			PROPOSED ESTIMATE		
ITEM	UNITS	NO. OF UNITS	COST/ UNIT	TOTAL	NO. OF UNITS	COST/ UNIT	TOTAL
12.5mm Superpave	TN	390	$ 100.00	$ 39,000	240	$ 100.00	$ 24,000
19.0 mm Superpave	TN	779	$ 100.00	$ 77,900	480	$ 100.00	$ 48,000
25.0 mm Superpave	TN	1,559	$ 100.00	$ 155,900	959	$ 100.00	$ 95,900
8" G.A.B.	SY	4,723	$ 15.41	$ 72,781	2,907	$ 15.41	$ 44,797
Sub-total				$ 345,581			$ 212,697
Mark-up at 10.00%				$ 34,558			$ 21,270
TOTAL				**$ 380,140**			**$ 233,967**
Estimated Savings:							$146,173

Value Analysis Design Alternative

PROJECT:	**Georgia Department of Transportation** **NHS00-0005-00(320) – P.I. No. 0005320** **I-75 Interchange at SR 215** **Dooly County**	ALTERNATIVE NO.:	**RD-21**
DESCRIPTION:	**Reduce the paved shoulder on SR-215 from 6.5' to 2'**	SHEET NO.:	**1** of **4**

Original Design:

The original design calls for 6.5 foot paved shoulder.

Alternative:

The proposed alternative would provide 2 foot paved shoulder.

Opportunities:

- Reduction in pavement cost
- Minimal reduction in utility

Risks:

- Minimal increase in design effort

Technical Discussion:

The original design calls for a 6.5 foot paved shoulder, however AASHTO allows a little as a 2 foot paved shoulder (AASHTO, A Policy on Geometric Design of Highways and Streets, page 314) based on the project criteria. However, a two foot shoulder will not provide sufficient width to accommodate pedestrian and bicycle traffic.

COST SUMMARY	INITIAL COST	PRESENT WORTH RECURRING COSTS	PRESENT WORTH LIFE-CYCLE COST
ORIGINAL DESIGN	$ 380,140	$ 0	$ 380,140
ALTERNATIVE	$ 117,030	$ 0	$ 117,030
SAVINGS	$ 263,110	$ 0	$ 263,110

Illustration

PROJECT:	**Georgia Department of Transportation** **NHS00-0005-00(320) – P.I. No. 0005320** **I-75 Interchange at SR 215** **Dooly County**	ALTERNATIVE NO.:	**RD-21**
DESCRIPTION:	**Reduce the paved shoulder on SR-215 from 6.5' to 2'**	SHEET NO.:	**2** of **4**

Original design

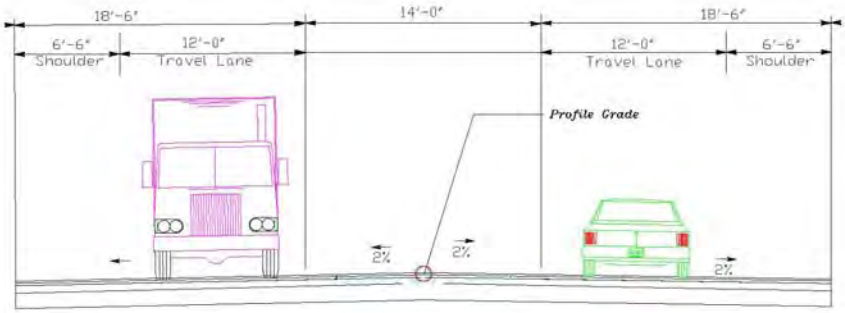

2-12' Lanes Divided with a 14' two way left turn and 6'-6" paved shoulders

Current Design

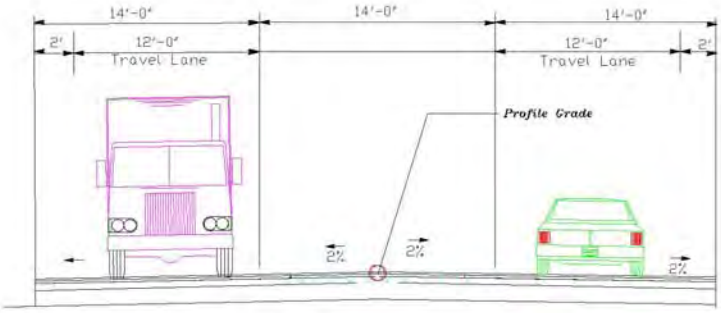

2-12' Lanes Divided with a 14' two way left turn and 2" paved shoulders

Alternate Design

Alternate design

Asphalt build-up assumed:
-165lb/sy 12.5mm Superpave
-330lb/sy 19mm Superpave
-660lb/sy 25mm Superpave

Calculations

PROJECT:	**Georgia Department of Transportation** **NHS00-0005-00(320) – P.I. No. 0005320** **I-75 Interchange at SR 215** **Dooly County**	ALTERNATIVE NO.:	**RD-21**
DESCRIPTION:	**Reduce the paved shoulder on SR-215 from 6.5' to 2'**	SHEET NO.:	**3** of **4**

~Station 703+00 to ~Station 735+70

Original Design:

Length of the roadway = 3270 LF, Width of the Paved Shoulders = (2 x 6.5') 13 LF

Total Area of Paved Shoulder = (3270 LF x 13 LF) / (9 SF / SY) = 4723.3 SY

Superpave 9.5mm = (4723.3 SY * 165/2000) = 389.7 TN => 390TN

Superpave 19.0mm = (4723.3 SY * 330/2000) = 779.3 TN => 779 TN

Superpave 25.0mm = (4723.3 SY * 660/2000) = 1558.7 TN => 1559 TN

8" GAB = 4723 SY

Alternative:

Length of the roadway = 3270 LF, Width of the Paved Shoulders = (2 x 2.0') 4 LF

Total Area of Paved Shoulder = (3270 LF x 4 LF) / (9 SF / SY) = 1453.3 SY

Superpave 9.5mm = (1453.3 SY * 165/2000) => 120 TN

Superpave 19.0mm = (1453.3 SY * 330/2000) => 240 TN

Superpave 25.0mm = (1453.3 SY * 660/2000) => 480 TN

8" GAB = 1453 SY

Cost Worksheet

PBSJ

PROJECT:	**Georgia Department of Transportation** **NHS00-0005-00(320) - P.I. No. 0005320** **I-75 Interchange at SR 215** **Dooly County**	ALTERNATIVE NO.:	**RD-21**
DESCRIPTION:	**Reduce the paved shoulder on SR-215 from 6.5' to 2'**	SHEET NO.:	**4** of **4**

CONSTRUCTION ITEM		ORIGINAL ESTIMATE			PROPOSED ESTIMATE		
ITEM	UNITS	NO. OF UNITS	COST/ UNIT	TOTAL	NO. OF UNITS	COST/ UNIT	TOTAL
12.5mm Superpave	TN	390	$ 100.00	$ 39,000	120	$ 100.00	$ 12,000
19.0 mm Superpave	TN	779	$ 100.00	$ 77,900	240	$ 100.00	$ 24,000
25.0 mm Superpave	TN	1,559	$ 100.00	$ 155,900	480	$ 100.00	$ 48,000
8" G.A.B.	SY	4,723	$ 15.41	$ 72,781	1,453	$ 15.41	$ 22,391
Sub-total				$ 345,581			$ 106,391
Mark-up at 10.00%				$ 34,558			$ 10,639
TOTAL				**$ 380,140**			**$ 117,030**
Estimated Savings:							$263,110

Value Analysis Design Alternative

PROJECT:	**Georgia Department of Transportation** **NHS00-0005-00(320) – P.I. No. 0005320** **I-75 Interchange at SR 215** **Dooly County**	ALTERNATIVE NO.:	**RD-23**
DESCRIPTION:	**Construct an "upgraded" TUDI**	SHEET NO.:	**1** of **4**

Original Design:

The original design proposes constructing a conventional Spread Diamond Interchange.

Alternative:

The proposed alternative would be to construct a Tight Urban Diamond Interchange and offsetting the roadway slightly to the north.

Opportunities:

- Reduction in required right-of-way
- Reduction in displacements
- Eliminate culvert widening for ramp
- Increased "access separation" along SR-215

Risks:

- Minimal increase in design effort
- An increase in bridge cost
- Moderate impacts to construction sequence
- Increased MOT cost
- Minor increase in paving costs

Technical Discussion:

The goal of modifying the existing interchange configuration is to improve the LOS of the ramp termini with the cross road. This is typically achieved in rural areas by the use of a "Spread Diamond" configuration to space the ramp intersection in excess of the recommended minimum 1,000' apart. Due to the high cost of right-of-way in urban areas, the Diamond configuration is often compressed to less than 350' to allow the signals to operate as a single coordinated unit and mitigate the negative effects of spacing two "independent" signals too close together. While operationally the Tight Urban Diamond Interchange may not be quite as effective as a Spread Diamond, if the right-of-way impacts and costs are high it may be a prudent choice even in a rural setting.

COST SUMMARY	INITIAL COST	PRESENT WORTH RECURRING COSTS	PRESENT WORTH LIFE-CYCLE COST
ORIGINAL DESIGN	$ 10,477,283	$ 0	$ 10,477,283
ALTERNATIVE	$ 1,590,952	$ 0	$ 1,590,952
SAVINGS	$ 8,886,331	$ 0	$ 8,886,331

Illustration

PROJECT:	**Georgia Department of Transportation** **NHS00-0005-00(320) – P.I. No. 0005320** **I-75 Interchange at SR 215** **Dooly County**	ALTERNATIVE NO.:	**RD-23**
DESCRIPTION:	**Build an upgraded Tight Urban Diamond Interchange (TUDI)**	SHEET NO.:	**2** of **4**

Current Design:

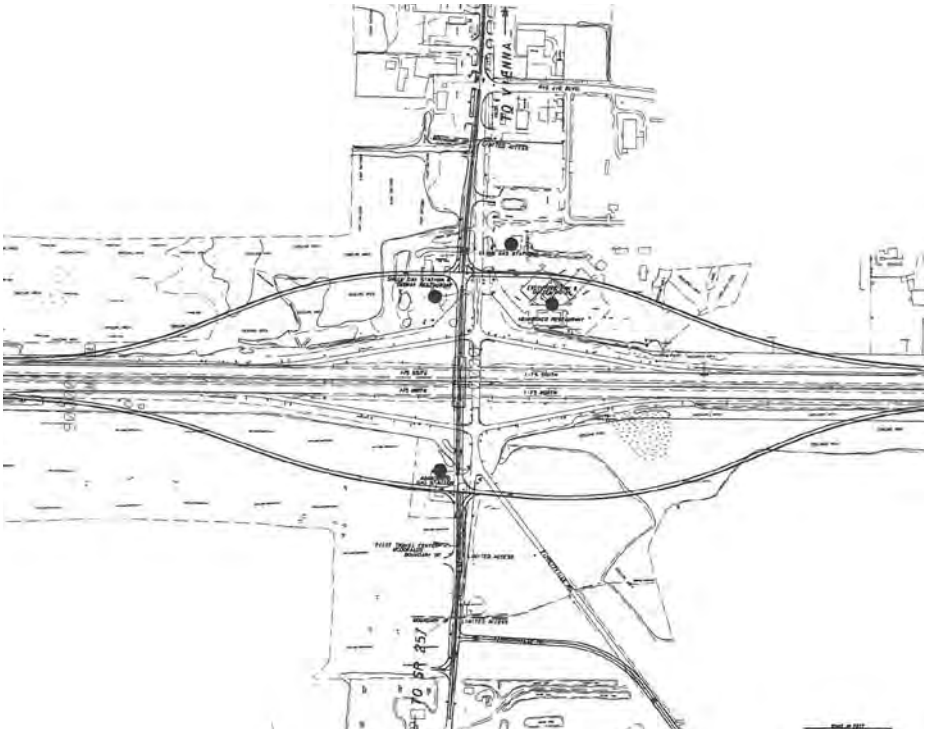

Alternative Design:

Calculations

PROJECT:	**Georgia Department of Transportation** **NHS00-0005-00(320) – P.I. No. 0005320** **I-75 Interchange at SR 215** **Dooly County**	ALTERNATIVE NO.:	**RD-23**
DESCRIPTION:	**Construct an "upgraded" TUDI**	SHEET NO.:	**3** of **4**

Increased Bridge Cost:

Assume an additional 12' width of bridge to accommodate an extra left turn lane.

(12' width x 250' length) = 3,000 SF

Assume an additional $1,000,000 for increased cost for Maintenance of Traffic

Additional roadway widening 12' width and 1500' length

Total Area of Paved Shoulder = (1500 LF x 12 LF) / (9 SF / SY) = 2,000 SY

Superpave 9.5mm = (2,000 SY * 165/2000) => 165TN

Superpave 19.0mm = (4723.3 SY * 330/2000) => 330 TN

Superpave 25.0mm = (4723.3 SY * 660/2000) => 660 TN

8" GAB = 2000 SY

Box Culvert:

From the estimate – 120 CY Class A concrete and 13,381 Reinforcing Steel.

Reduction in Right of Way:

Assume a reduction of 80% for all land both agricultural and commercial => 0.80 x 2,104,350 =>$1,683,480

Assume savings of ¾ of improvements => 0.75 x $2,592,000 = $1,944,000

Assume savings of ¾ of relocations => 0.75 x $100,000 = $75,000

Total = $3,702,480

Right of way:

Net cost	=	$3,702,480
Scheduling @ 55%	=	$ 2,036,364
Court cost @ 60%	=	$ 2,221,488
Appreciation @ 40%	=	$ 1,480,992
Total	=	$9,441,324

Cost Worksheet

PBS&J

PROJECT: **Georgia Department of Transportation**
NHS00-0005-00(320) - P.I. No. 0005320
I-75 Interchange at SR 215
Dooly County

ALTERNATIVE NO.: **RD-23**

DESCRIPTION: **Construct an "upgraded" TUDI**

SHEET NO.: **4** of **4**

CONSTRUCTION ITEM		ORIGINAL ESTIMATE			PROPOSED ESTIMATE		
ITEM	UNITS	NO. OF UNITS	COST/ UNIT	TOTAL	NO. OF UNITS	COST/ UNIT	TOTAL
Class A Concrete	CY	120	$ 586.16	$ 70,339	0	$ 586.16	$ -
Steel Reinforcing	LB	13,831	$ 0.95	$ 13,139	0	$ 100.00	$ -
Bridge	SF	0	$ 100.00	$ -	3,000	$ 100.00	$ 300,000
Right of Way	LS	1	$ 9,441,324	$ 9,441,324	0	$ -	$ -
Maintenance of Traffic	LS	0		$ -	1	$1,000,000	$ 1,000,000
12.5mm Superpave	TN	0	$ 100.00	$ -	165	$ 100.00	$ 16,500
19.0 mm Superpave	TN	0	$ 100.00	$ -	330	$ 100.00	$ 33,000
25.0 mm Superpave	TN	0	$ 100.00	$ -	660	$ 100.00	$ 66,000
8" G.A.B.	SY	0	$ 15.41	$ -	2,000	$ 15.41	$ 30,820
Sub-total				$ 9,524,803			$ 1,446,320
Mark-up at 10.00%				$ 952,480			$ 144,632
TOTAL				**$ 10,477,283**			**$ 1,590,952**
Estimated Savings:							$8,886,331

Value Analysis Design Alternative

PROJECT:	**Georgia Department of Transportation** **NHS00-0005-00(320) – P.I. No. 0005320** **I-75 Interchange at SR 215** **Dooly County**	ALTERNATIVE NO.:	**BR-1**
DESCRIPTION:	**Use 8'-0" shoulders on the bridge**	SHEET NO.:	**1** of **4**

Original Design:

The original roadway typical section for SR-215 over I-75 calls for the use of 10'-0" shoulders.

The original concept calls for the replacement of the existing four span (34.25' X 203.50') bridge carrying two travel lanes of SR 215 over I-75 with a 61'-3" X 320'-0" (45-115-115-45) bridge carrying two 12'-0" travel lanes, one 14'-0" turn lane and two 10'-0" shoulders.

Since bridge plans were not provided for this study, a four span 320'-0"long bridge is assumed (for comparison purposes) to span across the proposed future typical cross section of I-75.

Alternative:

The alternative proposes reducing the shoulder width from 10'-0" to 8'-0". The proposed shoulder width reduction will be in compliance with the GDOT Policies and Procedures (Minimum Bridge Widths) and Exhibit 6-5, Page 425 (Minimum Width of Traveled Way and Shoulders) of the AASHTO Geometric Design of Highways and Streets (2004).

Opportunities:

- Potential savings in construction costs due to reduced bridge width (deck concrete, elimination of a girder, reduced bent width, etc)
- Reduces dead loads on the exterior bridge girders

Risks:

- Minimal redesign effort (as the design is in the preliminary phase)

Technical Discussion:

The use of 8'-0" outside shoulder between the inside travel lanes and the bridge barrier will be adequate for bridge lengths greater than 200', per AASHTO Geometric Design of Highways and Streets (pgs. 224, 315, 412, 455 & etc.).

Replacing the 10'-0" shoulders with 8'-0" shoulders could potentially reduce the width by 4'-0" resulting in an out-to-out bridge width of 57'-3".

COST SUMMARY	INITIAL COST	PRESENT WORTH RECURRING COSTS	PRESENT WORTH LIFE-CYCLE COST
ORIGINAL DESIGN	$ 2,156,000	$ 0	$ 2,156,000
ALTERNATIVE	$ 2,015,200	$ 0	$ 2,015,200
SAVINGS	$ 140,800	$ 0	$ 140,800

Illustration

PROJECT:	**Georgia Department of Transportation** **NHS00-0005-00(320) – P.I. No. 0005320** **I-75 Interchange at SR 215** **Dooly County**	ALTERNATIVE NO.:	**BR-1**
DESCRIPTION:	**Use 8'-0" shoulders on the bridge**	SHEET NO.:	**2** of **4**

ORIGINAL DESIGN

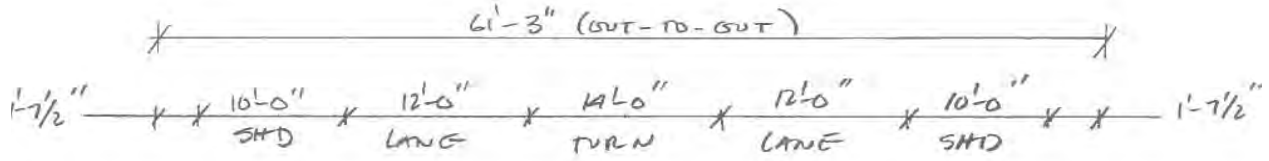

PROPOSED AH

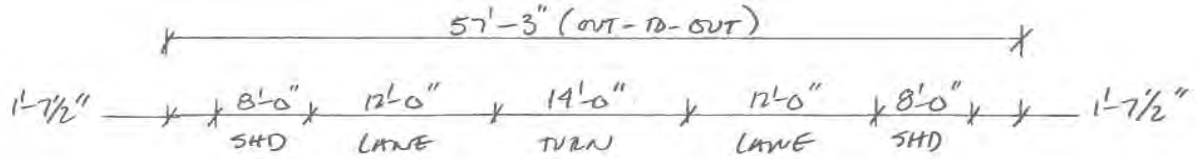

Calculations

PROJECT:	**Georgia Department of Transportation** **NHS00-0005-00(320) – P.I. No. 0005320** **I-75 Interchange at SR 215** **Dooly County**	ALTERNATIVE NO.:	**BR-1**
DESCRIPTION:	**Use 8'-0" shoulders on the bridge**	SHEET NO.:	**3** of **4**

Note:

1) **Reduction from current design = savings for alternative**
2) **Bridge Plans were not made available to the VE Team at the time of the study**

Alternative Design (assuming a 4 span bridge) with two 8'-0" shoulders, two 12'-0" lanes, one 14'-0" turn lane.

Reduction in Bridge Width = 2 * 2' = 4'-0"

Reduction in deck area = [320' * 4'] = 1280 SF

Other treatments (assumed same for current design & alternative, therefore, not considered).

NOTE:

A more detailed cost analysis may be performed on sufficiently developed alternative bridge plans to be able to itemize major components and realize greater cost savings than that shown in this study. Example: One Girder line can be eliminated, concrete grooving reduced, etc.

Cost Worksheet

PBS&J

PROJECT: **Georgia Department of Transportation**
NHS00-0005-00(320) - P.I. No. 0005320
I-75 Interchange at SR 215
Dooly County

ALTERNATIVE NO.: **BR-1**

DESCRIPTION: **Use 8'-0" shoulders on the bridge**

SHEET NO.: **4** of **4**

CONSTRUCTION ITEM		ORIGINAL ESTIMATE			PROPOSED ESTIMATE		
ITEM	UNITS	NO. OF UNITS	COST/ UNIT	TOTAL	NO. OF UNITS	COST/ UNIT	TOTAL
4' Reduction of Bridge Width		19,600	$ 100.00	$ 1,960,000	18,320	$ 100.00	$ 1,832,000
Sub-total				$ 1,960,000			$ 1,832,000
Mark-up at 10.00%				$ 196,000			$ 183,200
TOTAL				**$ 2,156,000**			**$ 2,015,200**
Estimated Savings:							$140,800

Value Analysis Design Alternative

PROJECT:	**Georgia Department of Transportation** **NHS00-0005-00(320) – P.I. No. 0005320** **I-75 Interchange at SR 215** **Dooly County**	ALTERNATIVE NO.:	**BR-2**
DESCRIPTION:	**Two span bridge with MSE walls (Wall alignment parallel to I-75). Use 8'-0" shoulders.**	SHEET NO.:	**1** of **4**

Original Design:

The original roadway typical section for SR-215 over I-75 calls for the use of 10'-0" shoulders.

The original concept calls for the replacement of the existing four span (34.25' X 203.50') bridge carrying two lanes of SR 215 over I-75 with a 61'-3" X 320'-0" bridge carrying two 12'-0" travel lanes, one 14'-0" turn lane and two 10'-0" shoulders.

Since bridge plans were not provided for this study, a four span 320'-0" long bridge is assumed (for comparison purposes) to span across the proposed future typical cross section of I-75.

Alternative:

The alternative proposes constructing a two span 230'-0" long bridge, thus shortening the bridge length and eliminating the end (approach) spans from the assumed four span bridge. Other bridge geometry remains the same as in the original design.

Opportunities:

- Potential savings in construction costs and construction time due to reduced bridge length
- Reduction in two intermediate bents

Risks:

- Minimal redesign effort (as the design is in the preliminary phase)
- Additional MSE Wall and fill requirements (the latter balanced by soil removal requirements in original design)

Technical Discussion:

A two span 57'-3" x 230'-0" bridge would provide enough horizontal clearance to span the future typical section of I-75.

A shorter (relative to the assumed design) two span bridge can be constructed by providing MSE Walled abutments. This span arrangement will accommodate future I-75 widening.

BT – 54 girders made of 8.0 ksi concrete can be used to span 115'-0", therefore, there is no effect on the PGL and vertical clearance to I-75 from the original design.

Replacing the 10'-0" shoulders with 8'-0" shoulders could potentially reduce the width by 4'-0" resulting in an out-to-out bridge width of 57'-3".

COST SUMMARY	INITIAL COST	PRESENT WORTH RECURRING COSTS	PRESENT WORTH LIFE-CYCLE COST
ORIGINAL DESIGN	$ 2,156,000	$ 0	$ 2,156,000
ALTERNATIVE	$ 1,723,425	$ 0	$ 1,723,425
SAVINGS	$ 432,575	$ 0	$ 432,575

Illustration

PROJECT:	**Georgia Department of Transportation** **NHS00-0005-00(320) – P.I. No. 0005320** **I-75 Interchange at SR 215** **Dooly County**	ALTERNATIVE NO.:	**BR-2**
DESCRIPTION:	**Two span bridge with MSE walls (Wall alignment parallel to I-75). Use 8'-0" shoulders.**	SHEET NO.:	**2** of **4**

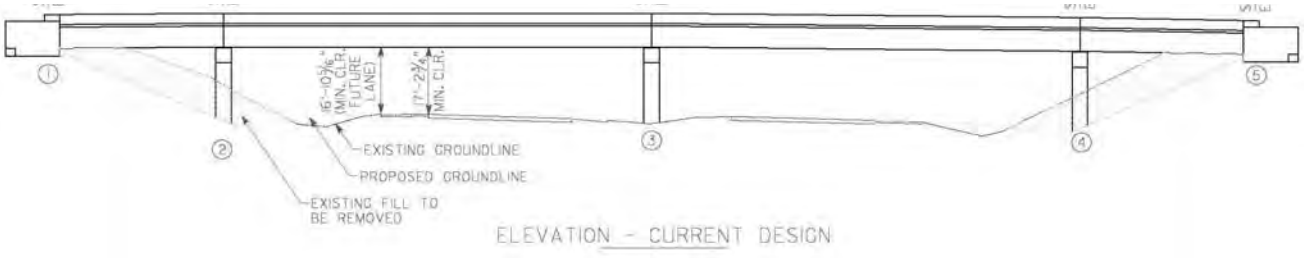

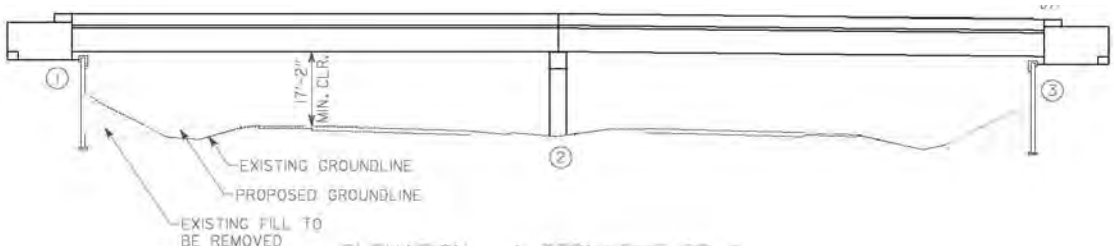

Alternative Design

Calculations

PROJECT:	**Georgia Department of Transportation** **NHS00-0005-00(320) – P.I. No. 0005320** **I-75 Interchange at SR 215** **Dooly County**	ALTERNATIVE NO.:	**BR-2**
DESCRIPTION:	**Two span bridge with MSE walls (Wall alignment parallel to I-75). Use 8'-0" shoulders**	SHEET NO.:	**3** of **4**

Note:

1) **Reduction from current design = savings for alternative**
2) **Bridge Plans were not made available to the VE Team at the time of the study**

For comparison purposes ONLY, the ASSUMED design is a four span (45' + 115' + 115' + 45') 61'-3" wide (Out-to-Out) bridge.

Alternative design (two Span (115' + 115') 57'-3" wide (Out-to-Out) bridge with MSE WALLED ABUTMENTS.

Reduction in Bridge Length = (320' – 230') = 90.0'

Reduction in deck area of Bridge = [90' * 61.25'] + [4' * 230] = 6432.5 SF

Assume MSE wall height of 20' over a length of 80.0' (length parallel to I-75)
Assume MSE wall tapers 2:1 over a length of 45' (length parallel to I-75)

Total area of MSE walls added = 2 * [(80' * 20') + (2 * 0.5 * 45' * 20')] = 5000 SF

Other treatments (assumed same for current design & alternative, therefore, not considered).

NOTE:

A more detailed cost analysis may be performed on sufficiently developed alternative bridge plans to be able to itemize major components and realize greater cost savings than that shown in this study. Examples: Reduction in grooved concrete, substructure concrete, diaphragm concrete, etc.

Cost Worksheet

PBS&J

PROJECT:	**Georgia Department of Transportation** **NHS00-0005-00(320) - P.I. No. 0005320** **I-75 Interchange at SR 215** **Dooly County**	ALTERNATIVE NO.:	**BR-2**
DESCRIPTION:	**Two span bridge with MSE-walled abutments** **(Wall alignment parallel to I-75)**	SHEET NO.:	**4** of **4**

CONSTRUCTION ITEM		ORIGINAL ESTIMATE			PROPOSED ESTIMATE		
ITEM	UNITS	NO. OF UNITS	COST/ UNIT	TOTAL	NO. OF UNITS	COST/ UNIT	TOTAL
Reduced of Bridge Deck Area	SF	19,600	$ 100.00	$ 1,960,000	13,168	$ 100.00	$ 1,316,750
MSE Wall (10-20')	SF	0	$ 50.00	$ -	5,000	$ 50.00	$ 250,000
Sub-total				$ 1,960,000			$ 1,566,750
Mark-up at 10.00%				$ 196,000			$ 156,675
TOTAL				**$ 2,156,000**			**$ 1,723,425**
Estimated Savings:							$ 432,575

PROJECT DESCRIPTION

INTRODUCTION

The project No. is NHS00-0005-00(320) - P.I. No. 0005320. This project consists of modifications to the existing interchange at I-75 and SR 215 east of Vienna in southeastern Dooly County. This project does not include any improvements or modifications to the I-75 mainline.

The project begins 0.65 miles south of the SR 215 interchange and ends 0.69 miles north of SR 215 interchange. The existing SR 215 is a two lane road with 11-foot wide lanes with a 4-foot shoulder. The current diamond interchange on I-75 consists of three, 12-foot wide lanes in each direction, 10-foot shoulders and 14-foot wide ramps with 4-foot outside shoulders and 2-foot inside shoulders. The functional classification for SR 215 is Rural Major Collector.

The modifications currently proposed will replace the current two lane bridge on SR 215 with a three lane bridge with the center lane being a 14-foot wide turn lane. The plans call for the bridge to be constructed parallel and south of the existing bridge. The ramps to I-75 will be reconstructed and lengthened with a terminal spacing of 1,000 feet. This will improve capacity and safety by providing sufficient storage space for vehicles and trucks on the bridge and will bring the ramp geometry up to current design standards.

The design speed for SR 215 will be 55 mph and ramp speeds will be 45 mph.

The estimated construction costs are $10,340,788 with additional Right-of-Way costs are $11,900,000 and reimbursable utilities costs of $966,800 for a total project cost of $23,744,627.

REPRESENTATIVE DOCUMENTS

- Georgia Department of Transportation
    - Construction Cost Estimates
    - Preliminary Right-of-Way Cost Estimate
    - Utilities Cost Estimate
    - Concept Report
    - Project Location Map
    - Traffic Analysis
    - Bridge Inventory
    - Construction plans and specifications

The VE Team utilized the supplied project materials noted above and the current standard drawings, details and specifications provided by Parsons.

Estimate Report for file "0005320"

Section ROADWAY ITEMS

Item Number	Quantity	Units	Unit Price	Item Description	Cost
150-1000	1	LS	167000.00	TRAFFIC CONTROL - NHS-0005-00(320)	167000.00
153-1300	1	EA	73569.88	FIELD ENGINEERS OFFICE TP 3	73569.88
210-0100	1	LS	1000000.00	GRADING COMPLETE - NHS-0005-00(320)	1000000.00
310-5080	18723	SY	15.41	GR AGGR BASE CRS, 8 INCH, INCL MATL	288521.43
310-5120	39934	SY	19.91	GR AGGR BASE CRS, 12 INCH, INCL MATL	795085.94
402-1812	610	TN	100.00	RECYCLED ASPH CONC LEVELING, INCL BITUM MATL & H LIME	61000.00
402-3121	6094	TN	100.00	RECYCLED ASPH CONC 25 MM SUPERPAVE, GP 1 OR 2, INCL BITUM MATL & H LIME	609400.00
402-3131	1870	TN	100.00	RECYCLED ASPH CONC 9.5 MM SUPERPAVE, GP 2 ONLY, INCL BITUM MATL & H LIME	187000.00
402-3190	4570	TN	100.00	RECYCLED ASPH CONC 19 MM SUPERPAVE, GP 1 OR 2,INCL BITUM MATL & H LIME	457000.00
413-1000	6648	GL	1.98	BITUM TACK COAT	13163.04
433-1200	2280	SY	179.27	REINF CONC APPROACH SLAB, INCL SLOPED EDGE	408735.60
436-1000	1100	LF	10.80	ASPHALTIC CONCRETE CURB -	11880.00
439-0026	23968	SY	66.37	PLAIN PC CONC PVMT, CL 3 CONC, 12 INCH THK	1590756.16
441-0016	2615	SY	40.27	DRIVEWAY CONCRETE, 6 IN TK	105306.05
641-1100	60	LF	54.27	GUARDRAIL, TP T	3256.20
641-1200	950	LF	18.34	GUARDRAIL, TP W	17423.00
641-5001	8	EA	638.12	GUARDRAIL ANCHORAGE, TP 1	5104.96
641-5006	4	EA	581.83	GUARDRAIL ANCHORAGE, TP 6	2327.32
641-5012	4	EA	1819.11	GUARDRAIL ANCHORAGE, TP 12	7276.44
				Section Sub Total:	**$5,803,806.02**

Section DRAINAGE ITEMS

Item Number	Quantity	Units	Unit Price	Item Description	Cost
500-3101	120	CY	586.16	CLASS A CONCRETE	70339.20
511-1000	13831	LB	0.95	BAR REINF STEEL	13139.45
550-1180	320	LF	41.05	STORM DRAIN PIPE, 18 IN, H 1-10	13136.00
550-1240	220	LF	52.59	STORM DRAIN PIPE, 24 IN, H 1-10	11569.80
550-2180	400	LF	36.02	SIDE DRAIN PIPE, 18 IN, H 1-10	14408.00
550-2240	300	LF	40.70	SIDE DRAIN PIPE, 24 IN, H 1-10	12210.00
550-3318	4	EA	691.16	SAFETY END SECTION 18 IN, STORM DRAIN, 4:1 SLOPE	2764.64
550-3324	2	EA	1052.72	SAFETY END SECTION 24 IN, STORM DRAIN, 4:1 SLOPE	2105.44
550-3618	10	EA	754.72	SAFETY END SECTION 18 IN, SIDE DRAIN, 6:1 SLOPE	7547.20
550-3624	10	EA	814.04	SAFETY END SECTION 24 IN, SIDE DRAIN, 6:1 SLOPE	8140.40
550-4118	10	EA	620.75	FLARED END SECTION 18 IN, SIDE DRAIN	6207.50
550-4124	10	EA	725.38	FLARED END SECTION 24 IN, SIDE DRAIN	7253.80
576-1018	80	LF	31.04	SLOPE DRAIN PIPE, 18 IN	2483.20
610-9099	1	LS	6201.77	REM WINGWALLS & PARAPETS, STA -	6201.77
				Section Sub Total:	**$177,506.40**

Section TEMPORARY EROSION CONTROL ITEMS

Item Number	Quantity	Units	Unit Price	Item Description	Cost
163-0232	5	AC	574.21	TEMPORARY GRASSING	2871.05
163-0300	2	EA	2728.85	CONSTRUCTION EXIT	5457.70
163-0521	170	EA	227.16	CONSTRUCT AND REMOVE TEMPORARY DITCH CHECKS	38617.20
165-0010	6700	LF	0.92	MAINTENANCE OF TEMPORARY SILT FENCE, TP A	6164.00
165-0040	170	EA	89.08	MAINTENANCE OF EROSION CONTROL CHECKDAMS/DITCH CHECKS	15143.60
167-1000	2	EA	1037.94	WATER QUALITY MONITORING AND SAMPLING	2075.88
167-1500	18	MO	950.27	WATER QUALITY INSPECTIONS	17104.86
171-0010	6700	LF	2.01	TEMPORARY SILT FENCE, TYPE A	13467.00
				Section Sub Total:	**$100,901.29**

Section PERMANENT EROSION CONTROL ITEMS

Item Number	Quantity	Units	Unit Price	Item Description	Cost
603-2181	250	SY	48.43	STN DUMPED RIP RAP, TP 3, 18 IN	12107.50
603-7000	250	SY	5.04	PLASTIC FILTER FABRIC	1260.00
700-6910	10	AC	917.26	PERMANENT GRASSING	9172.60
700-7010	25	GL	19.21	LIQUID LIME	480.25
700-8000	7	TN	350.05	FERTILIZER MIXED GRADE	2450.35
700-8100	500	LB	2.08	FERTILIZER NITROGEN CONTENT	1040.00
715-2100	4923	SY	2.50	BITUMINOUS TREATED ROVING, SLOPES	12307.50
716-2000	2009	SY	1.24	EROSION CONTROL MATS, SLOPES	2491.16
				Section Sub Total:	**$41,309.36**

Section SIGNING & MARKING

Item Number	Quantity	Units	Unit Price	Item Description	Cost
652-0110	4	EA	42.40	PAVEMENT MARKING, ARROW, TP 1	169.60
652-0210	4	EA	63.44	PAVEMENT MARKING, WORD, TP 1	253.76
652-8255	3200	LF	2.75	SOLID POLYUREA TRAFFIC STRIPE, 10 IN, WHITE	8800.00
653-0120	15	EA	70.58	THERMOPLASTIC PVMT MARKING, ARROW, TP 2	1058.70
653-1501	6920	LF	0.59	THERMOPLASTIC SOLID TRAF STRIPE, 5 IN, WHITE	4082.80
653-1502	11188	LF	0.59	THERMOPLASTIC SOLID TRAF STRIPE, 5 IN, YELLOW	6600.92
653-1704	28	LF	5.20	THERMOPLASTIC SOLID TRAF STRIPE, 24 IN, WHITE	145.60
653-3501	400	GLF	0.56	THERMOPLASTIC SKIP TRAF STRIPE, 5 IN, WHITE	224.00
654-1001	30	EA	3.63	RAISED PVMT MARKERS TP 1	108.90
654-1003	30	EA	3.71	RAISED PVMT MARKERS TP 3	111.30
657-1054	13031	LF	4.75	PREFORMED PLASTIC SOLID PVMT MKG, 5 IN, WHITE, TP PB	61897.25
657-3085	201	GLF	4.52	PREFORMED PLASTIC SKIP PVMT MKG, 8 IN, CONTRAST (BLACK-WHITE), TP PB	908.52
657-6054	13270	LF	4.60	PREFORMED PLASTIC SOLID PVMT MKG, 5 IN, YELLOW, TP PB	61042.00
				Section Sub Total:	**$145,403.35**

Section TRAFFIC SIGNAL ITEMS

Item Number	Quantity	Units	Unit Price	Item Description	Cost
615-1200	400	LF	21.50	DIRECTIONAL BORE - NHS-0005-00(320)	8600.00
639-2001	2000	LF	2.75	STEEL WIRE STRAND CABLE, 1/4 IN	5500.00
639-4004	8	EA	7598.48	STRAIN POLE, TP IV	60787.84
647-1000	Lump	LS	99555.08	TRAFFIC SIGNAL INSTALLATION NO - NHS-0005-00(320)	99555.08
				Section Sub Total:	**$174,442.92**

Section BRIDGE ITEMS

Item Number	Quantity	Units	Unit Price	Item Description	Cost
500-9999	13050	SF	100.00	BRIDGE CONSTRUCTION-225LF X 58LF	1305000.00
540-1101	1	LS	600000.00	REMOVAL OF EXISTING BR,	600000.00
				Section Sub Total:	**$1,905,000.00**

Section HIGH MAST LIGHTING

Item Number	Quantity	Units	Unit Price	Item Description	Cost
683-9999	1	Lump Sum	1500000.00	HIGH MAST LIGHTING	1500000.00
				Section Sub Total:	**$1,500,000.00**

Total Estimated Cost: $9,848,369.34

Subtotal Construction Cost	**$9,848,369.34**
Engineering @ 5 %	$492,418.47
Subtotal Construction Cost	**$10,340,787.81**
Contingency @ 5 % (Bridge replacement with added capacity)	$517,039.39
Total Construction Cost	**$10,857,827.20**
Right Of Way	$11,920,000.00
ReImb. Utilities	$966,800.00
Grand Total Project Cost	**$23,744,627.20**

Preliminary Right of Way Cost Estimate

Phil Copeland
Right of Way Administrator
By: Jerry Milligan

Date: April 9, 2008
Project: NHS-0005-00 (320) Dooly UPDATE **P.I. Number:** 0005320
Existing/Required R/W: 40.41 acres Required **No. Parcels:** 31
Project Termini : Reconstruction of I-75 Interchange at SR 215
Project Description: Reconstruction of I-75 Interchange at SR 215

Land:			
Commercial			
11.19 Acres @ $175,000/ ac. =	$ 1,958,250		
Agricultural			
29.22 Acres @ $ 5,000 / ac. =	$ 146,100		
		$	2,104,350
Improvements :			
4 Commercial Businesses, Billboards, signs, landscaping, paving		$	2,592,000
Relocation:			
4 Commercial @ $ 25,000 =	$ 100,000		
		$	100,000
Damage :			
13 Proximity	$ 0		
4 Cost to Cure	$ 0		
1 Consequential	$ 10,000		
		$	10,000
			$ 4,806,350

Net Cost		$ 4,806,350
Scheduling Contingency	55 %	2,643,492
Adm/Court Cost	60	4,469,905
		$ 11,919,747

Total Cost $ 11,920,000

Note: The Market Appreciation (40%) is not included in this updated Preliminary Cost Estimate.
Note: Accuracy of estimate is sole responsibility of preparer.

DEPARTMENT OF TRANSPORTATION
STATE OF GEORGIA

INTERDEPARTMENT CORRESPONDENCE

FILE **NHS-0005-00(320), Dooly County, P.I. #0005320**
I-75 Interchange @ SR-215

OFFICE Thomaston

DATE August 18, 2008

FROM Thomas B. Howell, P.E., District Engineer

TO Attn: Steve Adewale, Design Group Manager ***via: e-mail***

SUBJECT **UTILITY COST ESTIMATE**

The following is a ballpark utility cost estimate for facilities located within the scope of the above referenced project.

UTILITY OWNER	PUBLIC OR PRIVATE	TYPE OF UTILITY	REIMBURSABLE	NON-REIMBURSABLE
Middle Georgia EMC	Public	Electric	78,600	0
City of Vienna	Public	Water, Sewer, Gas	373,200	0
Citizens Telephone	Private	Telecom	515,000	519,726
ComSouth	Private	Telecom	NO FACILITIES	
TOTAL PROJECT COST			**$966,800**	**$519,726**

If you have any questions, please call Glenn A. Williams at 706-646-6696.

KMG:GAW:

cc: Jeff Baker, P.E., State Utilities Engineer *(via: e-mail)*
Terry Brigman, State Utilities Preconstruction Engineer *(via: e-mail)*

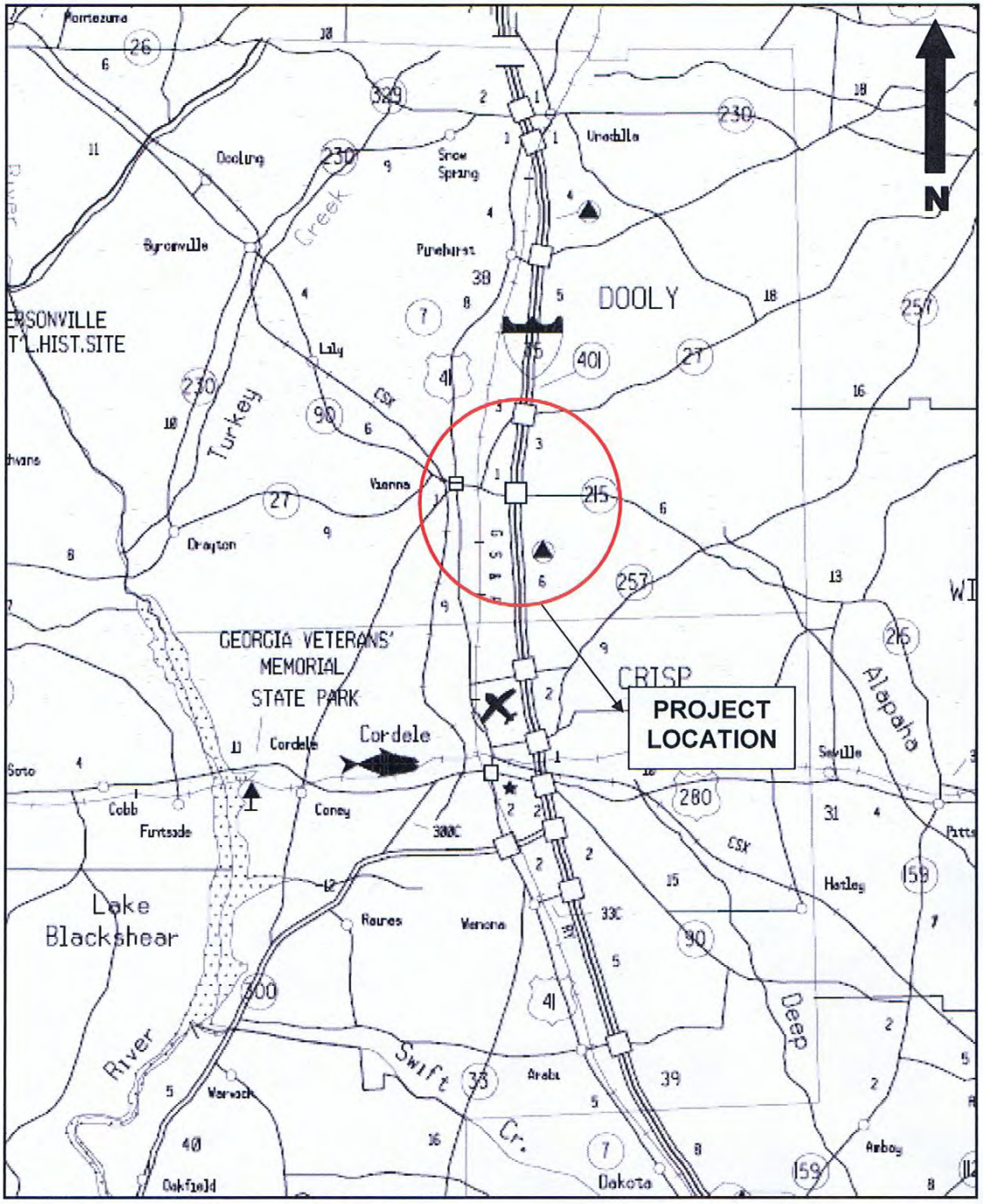

Sketch Location Map
Project: NHS-0005-00(320)
Description: I-75 @ SR 215

DEPARTMENT OF TRANSPORTATION
STATE OF GEORGIA

Office of Consultant Design

Project Concept Report

Project Number: NHS-0005-00(320)
County: Dooly
P. I. Number: 0005320

Federal Route Number: I-75
State Route Number: SR 215/SR 401

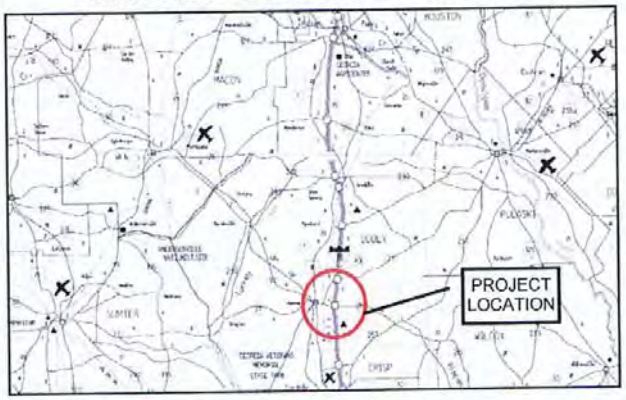

I-75 @ SR 215, Dooly County

Recommendation for approval:

DATE_____ _____
Project Manager

DATE_____ _____
Office Head / District Engineer

The concept as presented herein and submitted for approval is consistent with that which is included in the Regional Transportation Plan (RTP) and/or the State Transportation Improvement Program (STIP)

DATE_____ _____
State Transportation Planning Administrator

DATE_____ _____
State Transportation Financial Management Administrator

DATE_____ _____
State Environment / Location Engineer

DATE_____ _____
State Traffic Safety and Design Engineer

DATE_____ _____
Project Review Engineer

DATE_____ _____
State Urban Design Engineer

DATE_____ _____
State Bridge Design Engineer

Need & Purpose:
This project is located along I-75 in southeastern Dooly County, approximately two miles east of downtown Vienna. The project begins 0.65 miles south of the SR 215 interchange and ends 0.69 miles north of SR 215 interchange. The existing SR 215 is a 2-lane roadway with 11-foot wide lanes and 4 ft. outside shoulders. The Functional Classification for SR 215 is Rural Major Collector. The existing I-75 diamond interchange consists of 3, 12-foot wide through lanes in each direction with 10-foot wide shoulders and 14-foot wide ramps with 4-foot outside and 2-foot inside shoulders.

The 2005 ADT for SR 215 is 7900 vehicles per day with a 24 hour truck percentage of 14 percent. The ADT is estimated to increase to 17,000 vpd by the year 2033 with 18 percent of truck traffic. The 2013 level of service for SR 215 is at a level "C" which will decrease to a level "D" by year 2033 (Please refer to Attachment 7). The historical accident data for the latest three year period from 2005 through 2007 indicated that a total of 11 accidents occurred along the SR 215 within the project limits. The accident data indicates that the overall accident rates for 2005 and 2007 were 94 percent and 39 percent respectively higher than the statewide average accident rate. The overall accident rate for 2006 was 28 percent lower than the statewide average accident rate. There were no accidents involving injuries were reported in 2005 and 2006. Two injuries were reported in 2007. Thus the injury rate for 2007 was 30 percent higher than the statewide average injury rate. No fatal accidents were reported during the three year period within the project limits.

The project was initiated as the result of a request for a Needs Analysis by the City of Vienna and Dooly County. The existing diamond interchange has not been upgraded since its construction in 1960. In 2002, a study was conducted which resulted in a recommendation by the Project Nomination Review Committee for this interchange to be upgraded. The Department's objective of the project is to bring the ramps to current design standards and provide sufficient capacity for increased truck and vehicle volumes. In addition, the radii will be increased to provide adequate room for truck turning movements.

Description of Proposed Project:
This project consists of modifications to the existing interchange of I-75 at SR 215 east of Vienna in Dooly County. (See figure 1.1: Project Location Map). This project does not include any improvements or modifications to the I-75 mainline. The existing two lane bridge carrying SR 215 over I-75 will be replaced with a three lane bridge (one through lane in each direction with a 14' wide center turn lane). The new bridge will be constructed parallel to and south of existing bridge allowing maintenance of traffic on the existing bridge during construction. Right turn lanes will be provided from and onto SR 215. The ramps will be reconstructed to provide improved acceleration and deceleration, and to provide ramp terminal spacing of 1000 feet. The project will improve capacity and safety by providing sufficient storage space for vehicles and trucks on the bridge and ramp geometry that meets current design standards.

I-75 in the project area carries three (3) lanes in each direction. There is an adjacent project number CSNH-M003-00(243) Dooly County for concrete lane replacement (northbound and

southbound) along I-75 from the Crisp/Dooly county line to CR 323/Pinehurst-Hawkinsville Road for a distance of approximately 11.3 miles. A design exception was processed for this project to continue the use of 10-ft wide outside shoulder along the east side of I-75 between mile post 108.19 and 109.20.

This concept satisfies the Need and Purpose by upgrading the ramps to current design standards, providing adequate truck storage, and satisfactory turning radii at each ramp.

Is the project located in a Non-attainment area? _____**Yes** ___**X**___**No.**

PDP Classification: Major__X____ Minor_____

Federal Oversight: Full Oversight (X), Exempt( ), State Funded( ), or Other ( )

Functional Classification: Rural Major Collector

U. S. Route Number(s): I-75 **State Route Number(s):** SR 401, SR 215

Traffic (AADT):
Base Year: (2013) 11400 Design Year: (2033) 17000

EXISTING DESIGN FEATURES:

- **Typical Section: SR 215:** 2 - 11-foot lanes, with 4 feet wide shoulders.
- Posted Speed SR 215 55 mph Minimum radius for curvature: 4300 ft.
- Maximum superelevation rate for curve 6.00 %
- Maximum grade SR 215: 6.00 %
- Maximum grade Side Street: 1.00 %
- Maximum grade Driveways: 10.00 %
- Width of right-of-way: 160 – 200 ft.
- Major Structures: Bridge over I-75: Structure I.D.: 093-0020-0
  S. RTG: 75.41 Length: 204' Width: 34'
- Major Interchanges or Intersections: I-75 @ SR 215
- Mile point reference: Begin: 0.42 End: 1.34

- **Typical Section: I-75 Ramps:** 14-foot wide ramp, with 4 foot wide outside & 2 foo wide inside shoulders.

- Posted Speed: 45 mph Minimum radius for curvature: 1988 ft.
- Maximum superelevation rate for curve 8.00 %
- Maximum grade ramp: 5.00 % Maximum grade allowable: 5.00 %
- Width of right-of-way: 60 ft.

PROPOSED DESIGN FEATURES:

- **Proposed Typical Section(S):**
  SR 215 Mainline - Proposed S.R. 215 consists of 2-12 foot lanes with a 14' center turn lane with 10 foot outside shoulders, of which 2 feet is paved.

  Ramps - The proposed I-75 ramps will consist of 16-ft lanes with 12-ft outside and 6-ft inside shoulders. See attached typical sections.

- **Proposed Design Speed:**

  SR 215 Mainline - Proposed Design Speed SR 215 is 55 mph

  Ramps: Ramp Design Speed is 45 mph

- **Proposed Maximum grade:**

  SR 215 Mainline – Proposed maximum grade of SR 215: 6.0 %

  Maximum grade allowable: 6.0 %

  Proposed maximum grade of side street: 7.0 %

  Maximum grade allowable: 7.0 %

  Ramps – Proposed maximum grade of ramps is 5.0 %

  Maximum grade allowable is 5.0 %

- Proposed Maximum grade Driveway: 10 %
- **Maximum Degree of curve:**

  SR 215 Mainline – Proposed maximum degree of curve is 0.57

  Maximum degree of curve allowable is 5.40

  Ramps – Proposed maximum degree of curve is 3.58

  Maximum degree of curve allowable is 8.90

- **Right Of Way**
  - Width: 200 feet (SR 215) and varies 50-65 feet (Ramps)
  - Easements: Temporary ( ), Permanent (X), Utility ( ), Other ( ).

- Type of access control: Full ( ), Partial ( ), By Permit (X), Other ( )
- Number of Parcels: 31 Number of displacements: 4
  - Business: 4
  - Residences: None
  - Mobile homes: None
  - Other: None

- **Structures**
  - Bridge(s): Bridge carrying SR 215 over I-75 - Structure I.D.: 093-0020-0

- Major Intersections and Interchanges: I-75 @ SR 215

- Traffic Control during Construction: Two-way traffic will be maintained on the existing bridge during the construction of the new bridge located south of the existing bridge. Upon completion of the new bridge traffic will be shifted from the existing bridge to the new bridge.

- Design Exceptions to controlling criteria anticipated:

	UNDETERMINED	YES	NO
HORIZONTAL ALIGNMENT:	( )	( )	(X)
ROADWAY WIDTH:	( )	( )	(X)
SHOULDER WIDTH:	( )	( )	(X)
VERTICAL GRADES:	( )	( )	(X)
CROSS SLOPES:	( )	( )	(X)
STOPPING SIGHT DISTANCE:	( )	( )	(X)
SUPERELEVATION RATES:	( )	( )	(X)
HORIZONTAL CLEARANCE:	( )	( )	(X)
SPEED DESIGN:	( )	( )	(X)
VERTICAL CLEARANCE:	( )	( )	(X)
BRIDGE WIDTH:	( )	( )	(X)
BRIDGE STRUCTURAL CAPACITY	( )	( )	(X)

- **Design Variances:** A design variance for limit of access will be required as the access contr established by the proposed design does not meet the 1000 ft distance as per GDOT guidelin

- **Environmental Concerns:**
  - Permits:
    - ⇒ Probable Nationwide Permit
    - ⇒ Probable Stream Buffer Variance
    - ⇒ Probable locations of USTS: SE, NE and SW quadrants of interchange.

⇒ Probable location of hazardous waste: None identified.

- **Level of Environmental Analysis:**
  - Are Time Savings Procedures appropriate? Yes ( ), No (X),
  - Categorical exclusion (X),
  - Environmental Assessment/Finding of No Significant Impact (FONSI) ( ), or
  - Environmental Impact Statement (EIS) ( ).
- **Utility involvements:** *(Communications, Power, Gas, Petroleum, ITS, Railroads, etc.)* The City of Vienna and Dooly County have installed sewer and water lines in the southeast quadrant of the SR 215 @ I-75 interchange. Utilities in the project area include Middle Georgia EMC, Citizens Telephone, City of Vienna Water and Sewer and City of Vienna Gas, DOT Water and Sewer along I-75 from rest area going north to the project.

VE Study Required Yes(X) No( )

Project Responsibilities:
- Design, GDOT
- Right of Way Acquisition, GDOT
- Relocation of Utilities, GDOT
- Letting of contract, GDOT
- Supervision of construction, GDOT
- Providing material pits, Contractor
- Providing detours, N/A

Coordination
- Initial Concept Team Meeting Date: 05-08-07. (Meeting Minutes Attached)
- Concept Team Meeting Date: 05-22-08
- P.A.R. Meeting, dates and results: None Anticipated
- FEMA, USCG, and/or TVA: None
- Public Involvement: Public Information Open House (Held 10-30-07, PIOH comments and responses attached)

- **Other Projects In The Area:**
  - PI No. 003243 – Slab rehab along I-75 from the Crisp County line to CR 323/Pinehurst-Hawkinsville Road;
  - PI No. 003340 – Slab rehab along I-75 from CR 323/Pinehurst-Hawkinsville Road to SR 26;
  - PI No. 311665 – I-75 @ SR27, Widen Bridge & Ramps

- **Railroads:** None

- Other coordination to date: FHWA Coordination Meeting (02/16/07)

Scheduling

- Time to complete the environmental process: 16 Months
- Time to complete preliminary construction plans: 12 Months
- Time to complete right of way plans: 3 Months
- Time to complete the Section 404 Permit: NA
- Time to complete final construction plans: 6 Months
- Time to complete to purchase right of way: 18 Months

Other Alternates Considered:

Alternate 1

Widen Bridge to south side while maintaining traffic on existing bridge during construction. This Alternate was found to be undesirable due to past constructability issues with widening bridges in this manner. Also, there is no reasonable off-site detour route in the northbound direction.

Alternate 2

Build new bridge parallel to and north of existing bridge. This Alternate was found to be undesirable because it requires the displacement of the CITGO gas station in the northwest quadrant and because of the probability that the potential historic property's' boundary will be impacted on the east end of the project.

Alternate 3

Build new bridge parallel to and south of existing bridge. This Alternate is the preferred alternative due its constructability, minimization of displacements and avoidance of potential historic resource.

Alternate 4

Build loop ramp in SW quadrant of interchange. This Alternate was found to be undesirable due to increased cost of right-of-way and construction.

Alternate 5

No-Build. This Alternate was found to be undesirable because it does not meet the Need and Purpose and leaves the interchange with substandard features.

1.0 TRAFFIC PROJECTIONS

Existing (2005) ADT, 2013 and 2033 ADT and DHV were provided by GDOT OEL. Per a discussion with OEL staff, traffic counts were conducted for this project as the basis for traffic projections. The traffic counts indicated that the peak hour traffic percentage (k factor) was 10 percent for I-75, and ranged between 7 percent and 9 percent for SR 215. The peak hour directional traffic split percentage (D factor) varied for different peak hours and ranged from 50 percent to 80 percent for I-75, SR 215 and the major side streets.

GDOT historical traffic counts in this area and Atlanta Regional Commission (ARC) travel demand model forecast were reviewed for traffic growth rate development. For I-75, a traffic growth rate of 2.8 percent and 2 percent was determined for the period between existing year (2005) and base year and the period between base year and design year, respectively. A growth rate of 3.1 percent and 4.7 percent was determined for the period between existing year and base year for SR 215 west of I-75 and east of I-75, respectively. For the period between base year and design year, a growth rate of 2 percent for SR 215 was determined.

The growth rates, k factors and D factors calculated from the existing traffic volumes were used to calculate the base year and design year ADT and DHV.

The AM and PM design hourly volumes for 2013 were calculated using the 2013 ADT, 2033 ADT and DHV obtained from GDOT OEL as following:

$$2013\ ADT / 2033\ ADT = y$$
$$y * 2033\ AM\ DHV = 2013\ AM\ DHV$$
$$y * 2033\ PM\ DHV = 2013\ PM\ DHV$$

2.0 BASE YEAR TRAFFIC CONDITIONS ANALYSIS

The latest version of the Highway Capacity Software (HCS2000) was used to analyze the base year (2013) traffic operations within the study area. The analysis was conducted for the "Build" and "No-Build" scenarios using the projected traffic volumes. The 'Build' scenario is for the preferred alternative. Traffic volumes and turning movement counts are appended as Attachment 14.

2.1 Basic Freeway Segment Analysis

Freeway segment analysis was conducted along Interstate 75 before and after merge and diverge areas within the project limits. The resulting density and LOS values are shown below in Table 2.1.

Table 2.1 Year 2013 HCS Basic Freeway Segments Analysis									
Freeway Segment Limits	Dir	No-Build				Build			
		AM		PM		AM		PM	
		Density (pc/mi/ln)	LOS	Density (pc/mi/ln)	LOS	Density (pc/mi/ln)	LOS	Density (pc/mi/ln)	LOS
BEGIN Project Limit to SR 215 NB off-ramp	NB	16.7	B	16.4	B	16.7	B	16.4	B
SR 215 NB off-ramp to SR 215 NB on-ramp	NB	15.2	B	15.0	B	15.2	B	15.0	B
SR 215 NB on-ramp to END Project Limit	NB	16.6	B	16.6	B	16.6	B	16.6	B
END Project Limit to SR 215 SB off-ramp	SB	12.5	B	19.6	C	12.5	B	19.6	C
SR 215 SB off-ramp to SR 215 SB on-ramp	SB	11.3	B	17.7	B	11.3	B	17.7	B
SR 215 SB on-ramp to BEGIN Project Limit	SB	13.0	B	19.5	C	13.0	B	19.5	C

The results indicate that the freeway (in both northbound and southbound direction) will operate at an acceptable level of service for both 'No-Build' and 'Build' scenarios. Since no freeway improvements will be undertaken as part of the proposed project, no change is expected in the level of service between 'No-Build' and 'Build' options. All freeway segments will operate at an acceptable level of service of C and above with the highest density of 19.6 passenger cars per mile per lane (pc/mi/ln).

2.2 Ramp Merge – Diverge Analysis

Ramp merge and diverge analysis was conducted within the project limits along Interstate 75. The density and LOS values are listed below in Table 2.2.

Table 2.2 Year 2013 HCS Merge/Diverge Analysis									
Merge/Diverge Segment Limits	Dir	No-Build				Build			
		AM		PM		AM		PM	
		Density (pc/mi/ln)	LOS	Density (pc/mi/ln)	LOS	Density (pc/mi/ln)	LOS	Density (pc/mi/ln)	LOS
Off-ramp diverge to SR 215	NB	23.3	C	22.9	C	20.0	C	19.7	B
On-ramp merge from SR 215	NB	17.6	B	17.6	B	16.3	B	16.2	B
Off-ramp diverge to SR 215	SB	18.6	B	26.3	C	15.4	B	23.0	C
On-ramp merge from SR 215	SB	14.2	B	20.7	C	12.8	B	19.3	B

The results indicate that the ramp merge and diverge areas will operate at an acceptable level of service of C and above with the highest density of 23.0 pc/mi/ln.

2.4 Signalized Intersection Analysis

Signalized intersection analysis was conducted for SR 215 intersections with I-75 ramps. The Build alternative included the effects of exclusive right and left turn lanes. Delay and LOS values are listed in Table 2.4 below.

Table 2.4 Year 2013 Signalized Intersection Analysis

Intersection	Minor Street	Build			
		AM		PM	
		Delay (sec/veh)	LOS	Delay (sec/veh)	LOS
Union St. (SR 215) / NB Ramps	NB Ramp	10.6	B	10.9	B
Union St. (SR 215) / SB Ramps	SB Ramp	9.8	A	12.6	B

The analysis results indicate that the northbound ramp intersection will operate at LOS B during both AM and PM peak hours with the highest delay of 10.9 sec/veh. The westbound through traffic and northbound right-turn traffic will expect to have the longest 95 percentile queue length of 7 vehicles among all movements at this intersection. The southbound ramp intersection will operate at LOS B and better with the highest delay of 12.6 sec/veh. The eastbound through traffic and southbound left-turn traffic will expect to have the longest 95 percentile queue length of 8 vehicles at this intersection. The 95 percentile queues for all movements at the two intersections can be accommodated with the proposed lane configurations.

2.5 Roadway Segment Analysis

Roadway segment analysis was conducted for SR 215. Signalization for the ramp intersections was considered for the Build conditions. Speed and LOS values are listed in table 2.5 below. The speed and LOS listed are for the travel direction with the higher volume during the peak hours.

Table 2.5 Year 2013 HCS Roadway Segment Analysis

Street	No-Build				Build			
	AM		PM		AM		PM	
	Speed (mph)	LOS	Speed (mph)	LOS	Speed (mph)	LOS	Speed (mph)	LOS
Union St. (SR 215)	32.6	C	31.9	C	26.8	D	26.4	D

The results indicate that the SR 215 segment will operate at LOS D for Build condition with the lowest travel speed of 26.4 mile per hour (mph). Although the roadway segment for Build condition will not operate as well as No-Build conditions due to the installation of the signals, it will operate at acceptable LOS D with significant improvement on the operations of the two ramp intersections.

3.0 FUTURE (2033 DESIGN YEAR) TRAFFIC CONDITIONS AND ANALYSIS

Future traffic analysis was conducted for the project area considering the 'Build' and 'No-Build' scenarios. The 'Build' scenario is for the preferred alternative. Traffic volumes and turning movement counts are appended as Attachment 14.

3.1 Basic Freeway Segment Analysis

Freeway segment analysis was conducted along Interstate 75 before and after merge and diverge areas within the project limits. The resulting density and LOS values are shown below in Table 3.1.

Table 3.1 Year 2033 HCS Basic Freeway Segments Analysis

Freeway Segment Limits	Dir	No-Build				Build			
		AM		PM		AM		PM	
		Density (pc/mi/ln)	LOS	Density (pc/mi/ln)	LOS	Density (pc/mi/ln)	LOS	Density (pc/mi/ln)	LOS
BEGIN Project Limit to SR 215 NB off-ramp	NB	25.4	C	24.9	C	25.4	C	24.9	C
SR 215 NB off-ramp to SR 215 NB on-ramp	NB	22.7	C	22.4	C	22.7	C	22.4	C
SR 215 NB on-ramp to END Project Limit	NB	25.2	C	22.0	C	25.2	C	22.0	C
END Project Limit to SR 215 SB off-ramp	SB	18.7	C	31.7	D	18.7	C	31.7	D
SR 215 SB off-ramp to SR 215 SB on-ramp	SB	16.8	B	27.3	D	16.8	B	27.3	D
SR 215 SB on-ramp to BEGIN Project Limit	SB	19.4	C	31.6	D	19.4	C	31.6	D

The results indicate that the freeway (in both northbound and southbound direction) will continue to operate at an acceptable level of service for both 'No-Build' and 'Build' scenarios. Since no freeway improvements will be undertaken as part of the proposed project, no change is expected in the level of service between 'No-Build' and 'Build' options. The design year LOS will be at D and above with the highest density of 31.7 pc/mi/ln.

3.2 Ramp Merge – Diverge Analysis

Ramp merge and diverge analysis was conducted within the project limits along Interstate 75. The density and LOS values are listed below in Table 3.2.

Table 3.2 Year 2033 HCS Merge/Diverge Analysis

Merge/Diverge Segment Limits	Dir	No-Build				Build			
		AM		PM		AM		PM	
		Density (pc/mi/ln)	LOS	Density (pc/mi/ln)	LOS	Density (pc/mi/ln)	LOS	Density (pc/mi/ln)	LOS
Off-ramp diverge to SR 215	NB	31.3	D	30.9	D	28.4	D	28.2	D
On-ramp merge from SR 215	NB	25.9	C	26.1	C	24.6	C	24.8	C
Off-ramp diverge to SR 215	SB	25.3	C	35.1	E	22.1	C	31.8	D
On-ramp merge from SR 215	SB	20.9	C	30.5	D	19.5	B	29.2	D

The results indicate that all ramp merge and diverge areas will operate at an acceptable level of service of D and above with the highest density of 31.8 pc/mi/ln for Build conditions. For No-Build conditions, the diverge area at the southbound off-ramp will operate at LOS E.

3.3 Unsignalized Intersection Analysis

Unsignalized intersection analysis was conducted for SR 215 intersections with I-75 ramps. No-Build alternative analyzes the intersection of a single lane approach with a single lane cross road. The Build alternative includes the effects of exclusive right and left turn lanes. Delay and LOS values are listed in Table 3.3 below. The results in this table are for the movement experiencing the highest delay and worst LOS.

Table 3.3 Year 2033 Unsignalized Intersection Analysis

Intersection	Minor Street	No-Build				Build			
		AM		PM		AM		PM	
		Delay (sec/veh)	LOS	Delay (sec/veh)	LOS	Delay (sec/veh)	LOS	Delay (sec/veh)	LOS
Union St. (SR 215) / NB Ramps	NB Ramp	385.2	F	629.5	F	241.7	F	428.1	F
Union St. (SR 215) / SB Ramps	SB Ramp	750.5	F	1707.0	F	692.7	F	1611.0	F

The analysis indicates that for the 2033 Design Year intersections would operate at LOS F for both no-build and build conditions. Therefore, a signalized intersection analysis was performed as shown below.

3.4 Signalized Intersection Analysis

Signalized intersection analysis was conducted for SR 215 intersections with I-75 ramps. The Build alternative included the effects of exclusive right and left turn lanes. Delay and LOS values are listed in Table 3.4 below.

Table 3.4 Year 2033 Signalized Intersection Analysis

Intersection	Minor Street	Build			
		AM		PM	
		Delay (sec/veh)	LOS	Delay (sec/veh)	LOS
Union St. (SR 215) / NB Ramps	NB Ramp	17.2	B	14.3	B
Union St. (SR 215) / SB Ramps	SB Ramp	11.6	B	17.3	B

The analysis results indicate that the northbound ramp intersection will operate at LOS B during both AM and PM peak hours with the highest delay of 17.2 sec/veh. The eastbound and westbound through traffic will expect to have the longest 95 percentile queue length of 15 vehicles. The southbound ramp intersection will operate at LOS B with the highest delay of 17.3 sec/veh. The eastbound through traffic will expect to have the longest 95 percentile queue length of 14 vehicles. The 95 percentile queues for all movements at the two intersections can be accommodated with the proposed lane configurations.

3.5 Roadway Segment Analysis

Roadway segment analysis was conducted for SR 215. Signalization for the ramp intersections was considered for the Build conditions. Speed and LOS values are listed in Table 3.5 below. The speed and LOS listed are for the travel direction with the higher volume during the peak hours.

Table 3.5 Year 2033 HCS Two-Lane Highway Segment Analysis

Street	No-Build				Build			
	AM		PM		AM		PM	
	Speed (mph)	LOS	Speed (mph)	LOS	Speed (mph)	LOS	Speed (mph)	LOS
Union St. (SR 215)	30.3	D	27.3	D	25.6	D	23.6	D

The results indicate that the SR 215 segment will operate at LOS D for Build condition with the lowest travel speed of 23.6 mph. Although the installation of the signals will interrupt the through traffic on this road, it will significantly improve on the operations of the two ramp intersections.

BRIDGE INVENTORY DATA LISTING GEORGIA DEPARTMENT OF TRANSPORTATION

Structure ID: 093-0020-0 **Dooly** SUFF. RATING 75.41

Location & Geography

*	Structure I.D.No:	093-0020-0
	200 Bridge Information	06
*	6A Feature Int:	I-75 @109.33 (EXIT 109)
*	6B Critical Bridge:	0
*	7A Route Number Carried:	SR00215
*	7B Facility Carried:	SR 215
*	9 Location:	IN E VIENNA
	2 DOT District:	3
	207 Year Photo:	2005
*	91 Inspection Frequency:	24 Date: 08/08/2005
	92A Fract Crit Insp Freq:	00 Date: 02/01/1901
	92B Underwater Insp Freq:	00 Date: 02/01/1901
	92C Other Spc. Insp Freq:	00 Date: 02/01/1901
*	4 Place Code:	79444
*	5 Inventory Route (O/U):	1
	Type:	3
	Designation:	1
	Number:	00215
	Direction:	0
*	16 Latitude: 32-05.2	MMS Prefix: SR
*	17 Longitude: 83-45.7	MMS Suffix: 00 MP: 10.29
	98 Border Bridge: 000	%Shared: 00
	99 ID Number:	000000000000000
*	100 STRAHNET:	0
	12 Base Highway Network:	1
	13A LRS Inventory Route:	931021500
	13B Sub Inventory Route:	0
*	101 Parallel Structure:	N
*	102 Direction of Traffic:	2
*	264 Road Inventory Mile Post:	001.27
*	208 Inspection Area: 08	Initials: JLA
	Engineer's Initial: sgm	

* Location I.D. No.: 093-00215D-010.29N

*	104 Highway System:	0
*	26 Functional Classification:	07
*	204 Federal Route Type:	S No.: 01275
	105 Federal Lands Highway:	0
*	110 Truck Route:	0
	206 School Bus Route:	1
	217 Benchmark Elevation:	0000.00
	218 Datum:	0
*	19 Bypass Length:	07
*	20 Toll:	3
*	21 Maintenance:	01
*	22 Owner:	01
*	31 Design Load:	6
	37 Historical Significance:	5
	205 Congressional District:	03
	27 Year Constructed:	1960
	106 Year Reconstructed:	0000
	33 Bridge Median:	0
	34 Skew:	00
	35 Structure Flared:	0
	38 Navigation Control:	N
	213 Special Steel Design:	0
	267 Type of Paint:	1
*	42 Type of Service on:	1
		1
	214 Movable Bridge:	0
	203 Type Bridge:	I-O-M-O
	259 Pile Encasement:	3
*	43 Structure Type Main:	4 02
	45 No. Spans Main:	004
	44 Structure Type Appr:	0 00
	46 No. Spans Appr:	0000
	226 Bridge Curve Horz:	0 Vert: 1
	111 Pier Protection:	0
	107 Deck Structure Type:	1
	108 Wearing Surface Type:	1
	M	0
	F	8

Signs & Attachments

	225 Expansion Joint Type:	02
	242 Deck Drains:	0
	243 Parapet Location:	0
	Height:	0.00
	Width:	0.00
	238 Curb:	1.20 1
	239 Handrail:	7 7
*	240 Median Barrier Rail:	0
	241 Bridge Median Height:	0.00
	Width:	0.00
*	230 Guardrail Loc Dir Rear:	3
	Fwrd:	3
	Oppo Dir Rear:	0
	Fwrd:	0
	244 Approach Slab:	3
	224 Retaining Wall:	0
	233 Posted Speed Limit:	55
	236 Warning Sign:	0
	234 Delineator:	1
	235 Hazard Boards:	0
	237 Utilities Gas:	00
	W	00
	Ele	00
	Telephone:	00
	Sc	00
	247 Lighting Street:	0
	Naviagtion:	0
	Aerial:	0
*	248 County Continuity No.:	00

Programming Data

201 Project No.: I-75-1 (20) 104
202 Plans Available: 4
249 Prop. Proj. No. NHS-0005-00(320)
250 Approval Status: 0000
251 P.I. No.: 0005320
252 Contract Date: 02/01/1901
260 Seismic No.: 00000
75 Type Work: 00 0
94 Bridge Imp. Cost: $ 0
95 Roadway Imp. Cost: $ 0
96 Total Imp Cost: $ 0
76 Imp. Length: 000000
97 Imp. Year: 0000
114 Future ADT: 001650 Year: 2024

Hydraulic Data

215 Waterway Data
Highwater Elev.: 0000.0 Year: 1900
Avg. Streambed Elev.: 0000.0 Freq.: 00
Drainage Area: 00000
Area Of Opening: 000000
113 Scour Critical: N
216 Water Depth: 00.0 Br. Height: 00.0
222 Slope Protection: 4
221 Spur Dikes Rear: 0 Fwrd: 0
219 Fender System: 0
220 Dolphin: 0
223 Culvert Cover: 000
Type: 0
No. Barrels: 0
Width: 0.00 Height: 0.00
Length: 0 Apron: 0
* 265 U/W Insp. Area: 0 Diver: ZZZ

* Location I.D. No.: 093-00215D-010.29N

Measurements

* 29 ADT: 001100 Year: 2004
109 % Trucks: 10
* 28 Lanes On: 02 Under: 06
210 No. Tracks On: 00 Under: 00
* 48 Max. Span Length: 0070
* 49 Structure Length: 204
51 Br. Rwdy. Width: 27.90
52 Deck Width: 34.00
* 47 Tot. Horz. Cl: 27.90
50 Curb/Sdewlk Width: 2.00/2.00
32 Approach Rdwy Width: 022
* 229 Shoulder Width:
Rear Lt: 6.00 Type: 8 Rt: 6.00
Fwrd Lt: 6.00 Type: 8 Rt: 6.00
Pavement Width:
Rear: 22.00 Type: 2
Fwrd: 22.00 Type: 2
Intersection Rear: 1 Fwrd: 1
36 Safety Features Br. Rail: 2
Transition: 2
App. G. Rail: 2
App. Rail End: 2
53 Minimum Cl.Over: 99 ' 99 "
Under: H 17 ' 09 "
* 228 Min. Vertical Cl
Act. Odm Dir: 99 ' 99 "
Oppo. Dir: 99 ' 99 "
Posted Odm. Dir: 00 ' 00 "
Oppo. Dir: 00 ' 00 "
55 Lateral Undercl. Rt: H 12.60
56 Lateral Undercl. Lt: 12.00
* 10 Max Min Vert Cl: 99 ' 99 " Dir: 0
39 Nav Vert Cl: 000 Horz: 0000
116 Nav Vert Cl Closed: 000
245 Deck Thickness Main: 7.00
Deck Thick Approach: 0.00
246 Overlay Thickness: 0.00
212 Year Last Painted: Sup: 1986 Sub: 0000

Ratings

65 Inventory Rating Method: 1
63 Inventory Rating Method: 1
66 Inventory Type: 2 Rating: 25
64 Operating Type: 2 Rating: 42
231 Calculated Loads
H-Modified: 21 0
HS-Modified: 26 0
Type 3: 24 0
Type 3s2: 32 0
Timber: 28 0
Piggyback: 40 0
261 H Inventory Rating: 22
262 H Operating Rating: 36
67 Structural Evaluation: 6
58 Deck Condition: 5
59 Superstructure Condition: 8
* 227 Collision Damage: 0
60A Substructure Condition: 7
60B Scour Condition: N
60C Underwater Condition: N
71 Waterway Adequacy: N
61 Channel Protection Cond: N
68 Deck Geometry: 4
69 UnderClr. Horz/Vert: 9
72 Appr. Alignment: 6
62 Culvert: N

Posting Data

70 Bridge Posting Required: 5
41 Struct Open, Posted, Cl: A
* 103 Temporary Structure: 0
232 Posted Loads H-Modified: 00
HS-Modified: 00
Type 3: 00
Type3s2: 00
Timber: 00
Piggyback: 00
253 Notification Date 02/01/1901
253 Fed Notify Date: 02/01/1901 0

VALUE ENGINEERING PROCESS

This report summarizes the analysis and conclusions by the PBS&J Value Engineering team as they performed a VE Study during the period of March 16 through March 19, 2009 in Atlanta, Georgia, for the Georgia Department of Transportation.

INTRODUCTION

The Value Engineering Study team and its leadership were provided by PBS&J. This VE Team consisted of the following:

Les M. Thomas, P.E., CVS-Life	Certified Value Specialist
Luke Clarke, P.E, AVS	Senior Highway Design Engineer
Kevin Martin, Esq. AVS	Highway Construction Specialist
Fabricio Quinanez, P.E.	Senior Bridge Design Engineer
Randy S. Thomas, CVS	Assistant Team Leader

The Value Engineering Team followed the Seven Step Value Engineering job plan as promulgated by SAVE International. This Seven Step job plan includes the following:

- **Investigation/Information Phase** – during this phase of the VE Team's work, the team received a briefing from the Georgia Department of Transportation (GDOT) staff and Parsons Engineering. This briefing included discussions of the design intent behind the project, the cost concerns, and the physical project limitations. In the working session that followed, the VE Team developed cost models from the cost data provided by the designers and familiarized themselves with the construction drawings and other data that was available to the team. Some of the representative project information (concept report, cost estimate, and special provisions) may be found in the tabbed section of this report entitled ***Project Description***. Following this current narrative the reader will also find a cost model done in the Pareto fashion, i.e., identifying the highest costs down to the lowest costs for the larger construction cost elements. This cost model, developed by the VE Team, was used by the VE Team to help focus their week of work. The headings on the Pareto Chart also were used as headings for creative phase activities.

- **Analysis Phase** – during this phase the VE Team determined the "**Functions**" of the project. This was accomplished by reviewing the project from the simplest format in asking the questions of "What is the project supposed to do?", and "How is it supposed to accomplish this purpose? In the Value Engineering vernacular, the answers to these questions are cast in the form of active verbs and measurable nouns. These verb/noun pairs form the basis of the function analysis which distinguishes a Value Engineering effort from a potentially damaging cost cutting exercise.

- The important functions of the project were identified as follows:

    - **Project Objective/Goals**

        - **Improve Level of Service**
        - **Improve safety**
        - **Accommodate economic growth**
        - **Maintain reasonable schedule**
        - **Reduce construction costs**

    - **Project Basic Functions**

        - **Separate traffic**
        - **Increase capacity**
        - **Reduce conflicts**
        - **Improve pavement**

- **Speculation Phase -** The VE team performed a brainstorming session to identify ideas that might help meet the project objectives:

    - **Add travel lanes**
    - **Reduce Right of Way taking**

  This brainstorming session initially identified numerous ideas that were then evaluated in the Judgment phase. The reader will find the creative worksheets enclosed. These same work sheets were also used to record the results of the Judgment/Evaluation Phase.

- **Evaluation Phase –** Once the VE Team identified the creative ideas, it was necessary to decide which alternatives should be carried forward. This is the work of the Evaluation or Judgment Phase. The VE Team reflected back on the project constraints and objectives shared with the team by the owner's representatives, in the kick-off meeting on the first day of the workshop. From that guidance, the team selected ideas that they believed would improve the project by a vote process.

Following that selection process, the VE Team used the following values as measures of whether or not an alternative had enough merit to be carried forward in the VE process:

- Construction cost savings
- Improve value
- Maintainability
- Ability to implement the idea
- General acceptability of the alternatives
- Constructability
- Scheduling delays

Based on these criteria, the VE Team evaluated the alternatives and graded them from 5 (Excellent) down to 1 (Poor). Other notes about the alternatives are annotated at the bottom of the enclosed creative and evaluation sheets.

- **Development Phase** – During this phase, the VE Team developed each of the selected design alternatives whose rating was “4” or “5” because of time constraints. If time permitted, the team will develop additional recommendations. This effort included a detailed explanation of the idea with sketches as appropriate to clarify the idea from the original concept, advantages and disadvantages, a technical explanation and an estimation of the cost and resultant savings if implemented. (see the tabbed section – Study Results)

- **Recommendation Phase –** During this phase the VE Team reviews the alternative ideas to confirm which ones are appropriate for the project, have an opportunity for success and which will improve the value of the project if implemented.

- **Presentation Phase** – As noted earlier, the team made an informal “out-briefing” on the last day of the workshop, designed to inform the Owners and the Designers of the initial findings of the VE Study. This written report is intended to formalize those findings.

The following **Function – Worth - Cost** Analysis, was utilized to focus the team and stimulate brainstorming; a copy of the **Attendance Sheets** is also attached so that the reader can be informed about who participated in the Study proceedings.

VALUE ENGINEERING STUDY AGENDA

for

Georgia Department of Transportation

NHS00-0005-00(320)- P.I. No. 0005320

I-75 Interchange at SR 215

Dooly County

March 16-19, 2009

Pre-Workshop Activities

VE Team Leader organizes study, coordinates with the Owner and Designer the project objectives and materials necessary. The VE Team receives and reviews all project documents. The team develops a Pareto Chart and/or Cost Model for the project.

Day One

9:00-10:30 Design Team Presentation (Information Phase)

- Introduction of participants, owner, designer, and VE team members
- Presentation of the project by the design engineer including:
  - History and background
  - Design Criteria and Constraints
  - Special "U" turn requirements
  - Special needs (schools, businesses, etc.)
  - Sidewalks, bicycle lanes, and or multi-use trails
  - Historical Property protection
  - Current Construction Completion Schedule
  - Project Cost Estimate and Budget Constraints
- Owner Presentation – special requirements, definition of life cycle period and interest rate for life cycle costs
- Review VE Pareto Chart/Cost Model
- Discussion, questions and answers
- Overview of the VE Process and Agenda – Workshop goals & project goals

10:30-12:00 VE Team reviews project (Information Phase)

- Review design team's presentation
- Review agenda and goals of the study

1:00-2:30 Function Analysis Phase

- Analyze Cost Model – Pareto
- Identify basic and secondary functions
- Complete Function Matrix/FAST Diagram

2:30-5:00 Creative Phase

- Brainstorming of alternative ideas

Day Two

8:00-10:00 Evaluation Phase

- Establish criteria for evaluation
- Rank ideas
- Identify “best” ideas for development
- Identify those ideas that will become Design Suggestions
- Develop a cost/worth analysis
- Identify a “champion” for each idea to be developed

10:00-5:00 Development Phase

- Develop alternative ideas design suggestions with assessment of original design and write up new alternatives including:
    - Opportunities & risks
    - Illustrations
    - Calculations
    - Cost worksheets
    - Life cycle cost analysis

Day Three

8:00-5:00 Development Phase

- Continue developing Alternative Ideas
- Continue developing Design Suggestions
- Prepare for presentation to Owners and Designers

Day Four

8:00-9:00 Prepare Presentation
9:00-10:00 VE Team Presentation

FUNCTION ANALYSIS AND COST-WORTH

Georgia Department of Transportation
NHS00-0005-00(320) – P.I. No. 0005320
Dooly County

SHEET NO.: **1** of **2**

NO.	ELEMENT	FUNCTION VERB	FUNCTION NOUN	FUNCTION KIND	COST (000)	WORTH (000)	COMMENTS
1	**OVERALL PROJECT**	Improve	Level of Service	B	23,745	15,000	C/W=1.58
		Increase	Capacity	S			
		Enhance	Safety	S			
2	**RIGHT-OF-WAY**	Accommodate	Widening	B	11,920	7,000	C/W=1.98
		Facilitate	Utilities	RS			
3	**BRIDGE**	Cross	Interstate	B	2,144	1,686	C/W=1.27
		Allow	Expansion of I-75	B	1,905	1,400	C/W=1.36
4	**HIGH MAST LIGHTING**	Enhance	Safety	S	1,500	1,500	C/W=1.0
5	**CONCRETE PAVING**	Construct	Ramps	B	1,603	1,603	C/W/=1.0
6	**ASPHALT PAVING**	Create	Lanes	B	1,328	1,000	C/W= 1.32
		Increase	Capacity	B			
7	**BASE**	Support	Road	S	1,084	1,000	C/W=1.08
8	**GRADING**	Stabilize	Earthwork	B	1,000	900	C/W=1.09

Function defined as: Action Verb, Measurable Noun

Kind: B = Basic; S = Secondary; RS = Required Secondary; HO = Higher Order; LO = Lower Order

Cost/Worth Ratio = (Total Cost ÷ Basic Worth)

FUNCTION ANALYSIS AND COST-WORTH

Georgia Department of Transportation
NHS00-0005-00(320) – P.I. No. 0005320
Dooly County

SHEET NO.: **2** of **2**

NO.	ELEMENT	FUNCTION			COST (000)	WORTH (000)	COMMENTS
		VERB	NOUN	KIND			
9	**CONCRETE APPROACH SLABS**	Pave	Bridge approach	S	1,357	1,000	CW=1.35
10	**DRAINAGE ITEMS**	Convey	Storm water	B	178	178	C/W=1.0
11	**TRAFFIC SIGNAL ITEMS**	Enhance	Safety	S	174	0	C/W=1.74
12	**TRAFFIC CONTROL**	Enhances	Safe Construction	S	167	167	C/W=1.0
13	**SIGNING & MARKING**	Enhance	Safety	S	145	145	CW=1.0
14	**EROSION CONTROL-**	Stabilize	Earthwork	S	142	142	CW=1.0
15	**DRIVEWAYS**	Create	Access	S	105	105	CW=1.0
16	**FIELD ENGINEER'S OFFICE**	Observe	Construction	S	74	76	C/W=1.0
17	**GUARDRAILS**	Enhance	Safety	S	35	35	CW=1.0

Function defined as: Action Verb
Measurable Noun

Kind: B = Basic
S = Secondary
RS = Required Secondary
HO = Higher Order
LO = Lower Order

Cost/Worth Ratio =
(Total Cost ÷ Basic Worth)

PARETO CHART - COST HISTOGRAM

PROJECT: **Georgia Department of Transportation**

NHS00-0005-00(320) - P.I. No. 0005320
I-75 Interchange at SR 215

Dooly County

PROJECT ELEMENT	COST	PERCENT	CUM. PERCENT
Bridge Items	1,905,000	19.34%	19.34%
Concrete Paving & Curbs	1,602,636	16.27%	35.62%
High Mast Lighting	1,500,000	15.23%	50.85%
Superpave Asphalt	1,327,563	13.48%	64.33%
Base	1,083,607	11.00%	75.33%
Grading Complete	1,000,000	10.15%	85.48%
Concrete Approach Slabs	408,736	4.15%	89.63%
Drainage Items	177,506	1.80%	91.44%
Traffic Signal Items	174,443	1.77%	93.21%
Traffic Control	167,000	1.70%	94.90%
Signing & Marking	145,403	1.48%	96.38%
Erosion Control	142,210	1.44%	97.82%
Driveways	105,306	1.07%	98.89%
Engineers Office	73,570	0.75%	99.64%
Guardrails	35,388	0.36%	100.00%
***Subtotal of Construction Costs**	**$ 9,848,368**		
Engineering @5%	**$ 492,418**		
Contingency (Bridge with added capacity) @5%	**$ 517,039**		
Subtotal =	**$ 10,857,825**		
Total Construction Cost =	**$ 10,857,825**		
Reimb. Utilities =	**$ 966,800**		
Right-of-Way	**$ 11,920,000**		
TOTAL	**$ 23,744,625**		

Project: NHS00-0005-00(320)
P.I. No.0005320
Dooly County

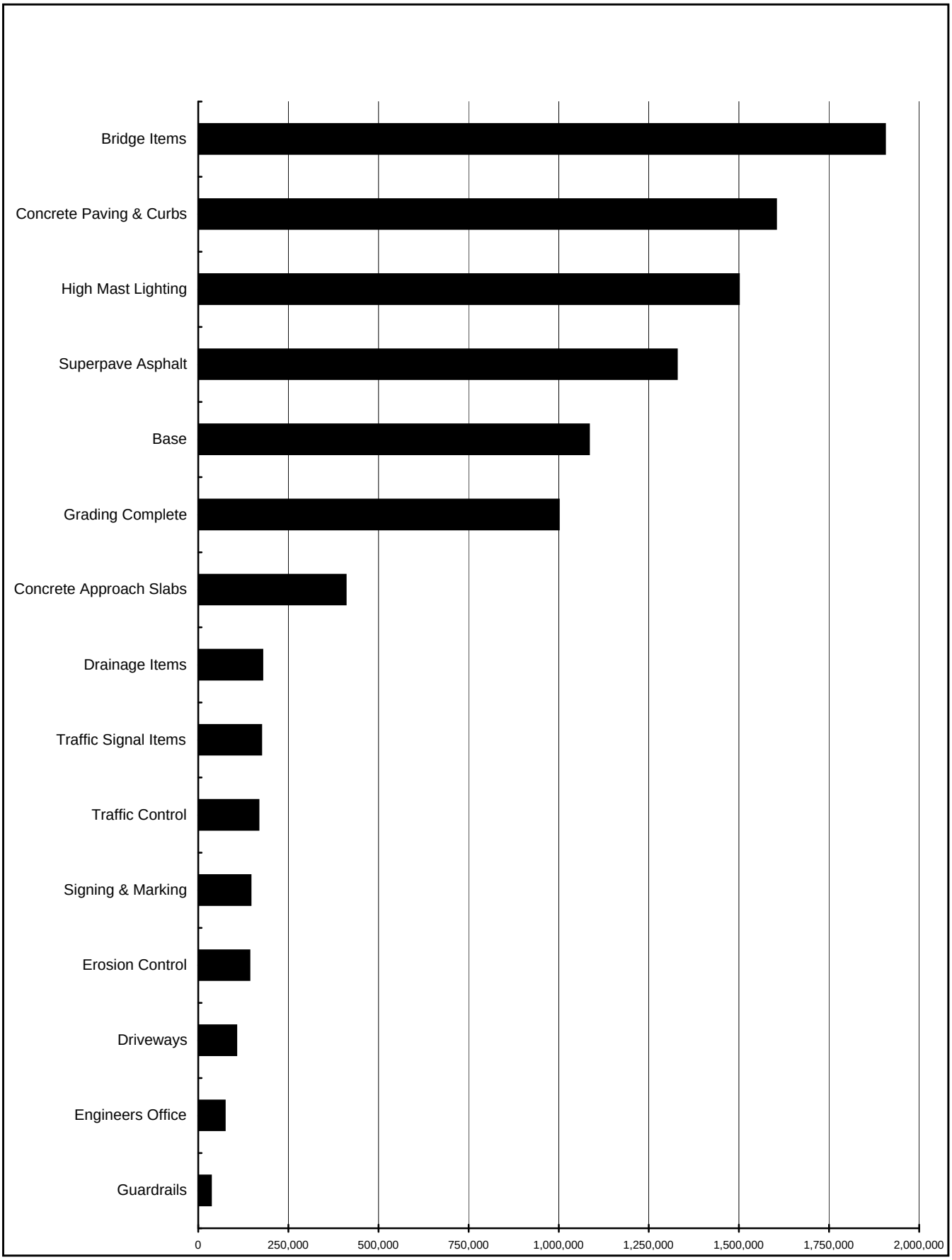

DESIGNER PRESENTATION

MEETING PARTICIPANTS

Geogia Department of Transportation **March 16, 2009**

NHS00-005-00(320) - P.I. No. 0005320 - Dooly County

NAME	ORGANIZATION & TITLE		E-MAIL	PHONE
Lisa Myers	GDOT	GDOT - Engineering Services	lmyers@dot.ga.gov	404-631-1770
James K. Magnus	GDOT	GDOT-Construction	jmagnus@dot.ga.gov	404-631-1971
Ken Werho	GDOT	GDOT-Traffic Operations	kwerho@dot.ga.gov	404-635-8144
Douglas Fadool	GDOT	GDOT-Engineering Services	dfadool@dot.ga.gov	404-631-1764
Stanley Hill	GDOT	GDOT-OPD	sthill@dot.ga.gov	404-631-1560
Ron Wishon	GDOT	GDOT-Engineering Services	rwishon@dot.ga.gov	404-631-1753
Katherine Russett	GDOT	GDOT-OEL	krussett@dot.ga.gov	404-699-6882
Stanley Kim	GDOT	GDOT-Bridge Design	skim@dot.ta.gov	404-631-1895
Steve Adewale	GDOT	GDOT-OPD	sadewale@got.ga.gov	404-631-1578
Les Thomas, PE, CVS	PBSJ	PBSJ	lmthomas@pbsj.com	678-677-6420
Luke Clarke, PE, AVS	PBSJ	PBS&J	lwclarke@pbsj.com	205-969-3776
Randy Thomas, CVS	PBSJ	PBSJ	rsthomas@pbsj.com	770-883-1545
Kevin Martin, Esq., AVS	PBSJ	PBSJ	klmartin@pbsj.com	205-969-3776
Ramesh Kalvakaalva, PE, AVS	CSI	Civil Services, Inc.	rameshk@civilservicesinc.com	770-312-2014
Fabricio Quinanez, PE	CSI	Civil Services, Inc.	fabricio@civilservicesinc.com	404-685-8001
Rajeev Shah		Parsons	rajeev.shah@parsons.com	678-969-2481
Alan Hunley		Parsons	alan.hunley@parsons.com	678-696-2304
S, Sajid Iqbal		Parsons	sajid.iqbal@parsons.com	688-969-2368
David Millen	GDOT	Dist 3 Preconst engineer (video conf.)	dmillen@dot.ga.gov	706-646-6987
Lamar Pruitt	GDOT	Dist 3 Asst. Dist Engineer (video conf)	lpruitt@dot.ga.gov	706-646-6911
Tom Queen	GDOT	Dist 3 Planning & Programing Engineer (video conf)	tqueen@dot.ga.gov	706-646-6982

VE TEAM PRESENTATION

MEETING PARTICIPANTS

Geogia Department of Transportation **March 19, 2009**

NHS00-005-00(320) - P.I. No. 0005320 - Dooly County

NAME	ORGANIZATION & TITLE		E-MAIL	PHONE
Lisa Myers	GDOT	GDOT - Engineering Services	lmyers@dot.ga.gov	404-631-1770
Ron Wishon	GDOT	GDOT - Engineering Services	rwishon@dot.ga.gov	404-631-1575
Douglas Fadool	GDOT	GDOT-Engineering Services	dfadool@dot.ga.gov	404-631-1764
Stanley Hill	GDOT	GDOT-OPD	sthill@dot.ga.gov	404-631-1560
Katherine Russett	GDOT	GDOT-OEL	krussett@dot.ga.gov	404-699-6882
Stanley Kim	GDOT	GDOT-Bridge Design	skim@dot.ta.gov	404-631-1895
Steve Adewale	GDOT	GDOT-OPD	sadewale@got.ga.gov	404-631-1578
Les Thomas, PE, CVS	PBS&J	PBS&J	lmthomas@pbsj.com	678-677-6420
Luke Clarke, PE, AVS	PBS&J	PBS&J	lwclarke@pbsj.com	205-969-3776
Kevin Martin, Esq., AVS	PBS&J	PBSJ	klmartin@pbsj.com	205-969-3776
Fabricio Quinanez, PE	CSI	Civil Services, Inc.	fabricio@civilservicesinc.com	404-685-8001
Rajeev Shah		Parsons	rajeev.shah@parsons.com	678-969-2481
Alan Hunley		Parsons	alan.hunley@parsons.com	678-696-2304
S, Sajid Iqbal		Parsons	sajid.iqbal@parsons.com	688-969-2368
David Millen	GDOT	Dist 3 Preconst engineer (video conf.)	dmillen@dot.ga.gov	706-646-6987
Tom Queen	GDOT	Dist 3 Planning & Programing Engineer (video conf)	tqueen@dot.ga.gov	706-646-6982
Christy Poon-Atkins		FHWA	christy.poon-atkins@fhwa.dot.gov	404-562-3630

CREATIVE IDEA LISTING

PROJECT: **Georgia Department of Transportation**
NHS00-0005-00(320) – P.I. No. 0005320
I-75 Interchange at SR 215
Dooly County

SHEET NO.: **1** of **2**

NO.	IDEA DESCRIPTION	RATING
	BRIDGE (BR)	
BR-1	Use 8' shoulders on the bridge	5
BR-2	Two span bridge with MSE walls (Wall alignment parallel to I-75).	5
BR-3	Two span bridge with MSE walls (U-MSE wall wrapped around end bents).	2
BR-4	Use a three span arrangement	1
BR-5	Use a four span arrangement	2
BR-6	Rehab the existing bridge; as well as construct a new two lane bridge	1
BR-7	Construct a new bridge at the same location as the old bridge	2
BR-8	Construct a temporary bridge to allow construction of a new bridge on the existing alignment	2
BR-9	Construct two new - 2 lane bridges	2
BR-10	Widen the existing bridge	1
	ROADWAY (RD)	
RD-1	Install signals when warranted	4
RD-2	Use 8' shoulders on SR 215	See BR-1
RD-3	Use 2' inside paved shoulder in-lieu of 4' paved shoulder on ramps	5
RD-4	Reduce speed to 45 mph on SR 215	2
RD-5	Construct a partial cloverleaf-A	4
RD-6	Use asphalt in-lieu of concrete on the ramps	4

Rating: 1→2 = Not to be Developed; 3 = Varying Degrees of Development Potential;
4→5 = Most likely to be Developed; DS = Design Suggestion; ABD = Already Being Done; OB= Observation

CREATIVE IDEA LISTING

PROJECT: **Georgia Department of Transportation**
NHS00-0005-00(320) – P.I. No. 0005320
I-75 Interchange at SR 215
Dooly County

SHEET NO.: **2** of **2**

NO.	IDEA DESCRIPTION	RATING
	ROADWAY (RD) cont.	
RD-7	Provide a right in/right out at Hamburg Enterprise Road	OB
RD-8	Construct Tippettville Road connection as a “T” intersection on both ends	4
RD-9	Construct an auxiliary lane from the rest area to ramp A	2
RD-10	Build a tight urban design interchange at grade	1
RD-11	Us11’ lanes of SR 215	2
RD-12	Use EMC Road in-lieu of Tippettville Road reconstruction	2
RD-13	Move Spread Diamond Interchange to the east 300’	3
RD-14	Move Spread Diamond Interchange to the east 300’ and north 100’	3
RD-15	Use a Single Point Urban Interchange (SPUI)	3
RD-16	Eliminate area lighting system	4
RD-17	Move Spread Diamond Interchange to the west	2
RD-18	Reduce the length of the ramp D taper so as not to impact the drainage structure	1
RD-19	Reduce western termini of SR 215	3
RD-20	Reduce paved shoulder from 6’-6” to 4’ on SR 215	4
RD-21	Reduce paved shoulder from 6’-6” to 2’ on SR 215	4
RD-22	Construct a round-about for SR 215, Tippettville Road, and the off ramps	2
RD-23	Build an upgraded Tight Urban Design Interchange (TUDI)	4

Rating: 1→2 = Not to be Developed; 3 = Varying Degrees of Development Potential;
4→5 = Most likely to be Developed; DS = Design Suggestion; ABD = Already Being Done; OB=Observation