ORIGINAL TO GENERAL FILES

DEPARTMENT OF TRANSPORTATION
STATE OF GEORGIA

OFFICE OF DESIGN POLICY & SUPPORT
INTERDEPARTMENTAL CORRESPONDENCE

FILE P.I. #0004688
MSL00-0004-00(688)
Paulding County
Easr Hiram Parkway
from SR 92 to SR 6/US 278

OFFICE Design Policy & Support

DATE 8/12/2010

FROM for Brent Story, State Design Policy Engineer

TO SEE DISTRIBUTION

SUBJECT **APPROVED REVISED CONCEPT REPORT**

Attached is the approved Revised Concept Report for the above subject project.

Attachment

DISTRIBUTION:

Bobby Hilliard, State Program Delivery Engineer
Genetha Rice-Singleton, Program Control Adminstrator
Glenn Bowman, State Environmental Administrator
Kathy Zahul, State Traffic Engineer
Ron Wishon, State Project Review Engineer
Jeff Baker, State Utilities Engineer
Kent Sager, District 6 Engineer
Kerry Bonner, District 6 Utilities Engineer
Paul Liles, State Bridge Engineer
Angela Robinson, Financial Management Administrator
Angela Alexander, State Transportation Planning Administrator
Ken Thompson, Statewide Location Bureau Chief
Michael Henry, Systems & Classification Branch Chief
Ernay Robinson, Project Manager
BOARD MEMBER - 11th Congressional District

DEPARTMENT OF TRANSPORTATION
STATE OF GEORGIA

REVISED CONCEPT REPORT

Project Number: MSL-0004-00(688) Paulding County
County: Paulding
P.I. Number: 0004688
Federal Route Number: None
State Route Number: Temporary SR 1200

The significant changes in the concept and the reason for those changes are as follows:

(1) The Total Length of Project has changed from 2.70 miles to 2.90 miles.
The original project length did not include improvements to the West Hiram Parkway at the southern project terminus and Poplar Springs Road at the northern project terminus.

(2) Travel Lane widths were reduced from 12 feet to 11 feet in width. Lanes were reduced from 12 feet to 11 feet due to the results and recommendations from the Value Engineering Study.

Submitted for approval:

DATE 6-4-10 — Jacobs
Design Consultant Name and Firm (if applicable)

DATE _____ — _____
Local Government (if applicable)

DATE _____ — _____
Design Phase Office Head (if applicable)

DATE 6/8/10 — Bobby Hilliard
Office Head (Project Manager's Office)

DATE 6/8/10 — Emory Robinson
Project Manager

Recommendation for approval:

DATE 6/30/10 — Glenn Bowman **
State Environmental Administrator

DATE 7/7/10 — Paul Liles **
State Bridge Design Engineer (if applicable)

The concept as presented herein and submitted for approval is consistent with that which is included in the Regional Transportation Program (RTP) and/or the State Transportation Improvement Program (STIP).

DATE 7/9/10 — Angela I. Alexander
State Transportation Planning Administrator

* Amendment #10 of the ARC TIP/RTP proposes to revise the project's limits and length as described in this concept report.

** Recommendation on file. KKF

REVISED PROJECT CONCEPT REPORT

P.I. Number: 0004688
Project Number: MSL-0004-00(688)
County: Paulding County

Need and Purpose: The need exists to provide local and through traffic with an improved travel way in the City of Hiram reducing traffic on US 278/SR 6 and SR 92. SR 92 and US 278 are currently operating at an unacceptable level of service and will continue to worsen as Paulding County continues to develop. Without the proposed new location parkway, area roadways likely would continue to experience accident rates in excess of the statewide average. The purpose of the proposed improvement is to reduce traffic on US 278/SR 6 and SR 92 and in turn provide local and through traffic with a facility that would adequately serve current and future travel demand. The proposed East Hiram Parkway would accomplish this by providing travel from east Paulding County and Cobb County to south Paulding and Douglas County/Douglasville to circumvent the congested sections of SR 92 in Hiram. Constructing the parkway would improve traffic operations and facilitate the movement of freight more efficiently in Hiram.

Please see the original Need and Purpose (attached) from the approved concept.

Project Location: The proposed East Hiram Parkway New Location project begins approximately 650 feet west of the West Hiram Parkway intersection with SR 92 and extends on New Location to a point 865 feet east of the existing Cleburne Parkway intersection with SR 6/US 278 for a total project length of 2.9 miles all within the City of Hiram in Paulding County. See attached Location Map.

Description of the approved concept: Project MSL-0004-00(688) is the East Hiram Parkway, beginning on new location at the intersection of SR 92 and the proposed West Hiram Parkway and extending eastwardly over Gray's Mill Creek, crossing Arnold Lane, Poole Road, Angham Road, Rosedale Road, Lula Circle, and Cleburne Parkway for approximately 2.7 miles to the intersection of US 278 and Cleburne Parkway / Popular Springs Road in Hiram.

This project is a 4-lane facility with a 20 foot raised median, 12 foot travel lanes and 10 foot shoulders from SR 92 to Rosedale Lane and with a 20 foot raised median, 12 foot travel lanes and 16 foot urban (curb and gutter) shoulders from Rosedale Lane to US 278/SR 6. Partial limited access is proposed from SR 92 to Rosedale Lane and controlled access by permit is proposed from Rosedale Lane to US 278/SR 6. Major structures on the proposed include constructing a bridge over Gray's Mill Creek, and Norfolk Southern Railroad. A culvert will be constructed for the crossing of the GDOT Edna to Rockmart Rail Line (Silver Comet Trail).

PDP Classification: Major X Minor ___

Federal Oversight: Full oversight ( ), Exempt (x), State Funded ( ), other ( )

Functional Classification: Urban Minor Arterial

U.S. Route Number: None **State Route Numbers:** Temporary SR 1200

Traffic (AADT) as shown in the approved concept:

Base Year: N/A New Location Design Year: 23,000 (2030)

Updated traffic date (AADT):

Base Year: N/A New Location Design Year: 23,600 (2032)

Approved Programmed / Schedule:

P.E. 2004 R/W: Local/2009* Construction 2011

*High Priority Project Funds

Value Engineering Study Required: Yes(X) No ( )

(Note -VE Study was held November 16, 2007)

Benefit/Cost Ratio: N/A

Is the project located in an Ozone Non-attainment area? Yes (X) **No** ( )

Is this project in a PM2.5 Non-attainment area? Yes (X) **No** ( )

Paulding County is Non-attainment for ozone. All appropriate modeling and evaluations were performed for the project E/A FONSI. The proposed project concept will not change the conforming plan's model description and the number of through lanes is not being modified.

Approved Features:	**Proposed Features:**
The project begins at the intersection of CR 92 and West Hiram Parkway (currently under construction) and extends easterly to US 278 at Cleburne Parkway/Poplar Springs Road for a total of 2.70 miles. The construction proposes four, 12' lanes with 10' rural shoulders and a 20' raised median from SR 92 to Rosedale Lane and four, 12' lanes with 16' urban (curb and gutter) shoulders and a 20' raised median from Rosedale Lane to US 278/SR 6.	The project begins at intersection of Bill Carruth Parkway with SR 92 and extends on New Location to a point 865 feet east of the existing Cleburne Parkway intersection with SR 6/US 278 for a total project length of 2.9 miles The project will begin at the intersection of CR 92 and West Hiram Parkway and extends northerly to US 278 at Cleburne Parkway/Poplar Springs Road for a total of 2.9 miles.

	Proposed Features (Continued): The construction proposes four, 11' lanes with 10' rural shoulders and an 20' raised median from SR 92 to Rosedale Lane and four, 11' lanes with 16' urban (curb and gutter) shoulders and an 20' raised median from Rosedale Lane to US 278/SR 6. The construction also proposes a median reduction from 20' to 12' beginning at SR 92 and extending east approximately 2,800 feet and will require a design variance.
Reason For Change: The Total Length of Project has changed from 2.70 miles to 2.90 miles. The original project length did not accommodate improvements to the West Hiram Parkway at the southern project terminus or to Poplar Springs Road at the northern project terminus. Changes for the lane width reduction were due to the results and recommendations from the Value Engineering Study.	

Potential Environmental Impacts of Proposed Revision: There are no expected environmental impacts due to the reduction of the project foot print or the change in total project length.

Have Proposed Revisions Been Reviewed by Environmental Staff? (X) Yes ( ) No

Updated Cost Estimate:

Updated Cost Estimate	
Base Construction Cost	$ 17,460,126.74
Engineering and Inspection	$ 873,006.34
Fuel & Asphalt Adjustment	$ 3,242,314.60
Total Construction Cost	**$ 21,575,447.68**

Right-of-Way	$ 4,954,804
Utilities (reimbursable)	$ 344,625 (Local)
Utility Contingencies	

Recommendation: The Office of Roadway Design's recommendation is that the proposed revision to the Concept Report be approved for implementation.

Attachments:

1) Cost Estimate
2) Location Map
3) Sketch Map
4) Typical Sections
5) Updated Traffic

Exempt projects

Concur: _____
Director of Engineering

Approve: _____ Date: 8/9/10
Chief Engineer

Estimate Report for file "MSL-0004-00(688)"

Section ROADWAY ITEMS

Item Number	Quantity	Units	Unit Price	Item Description	Cost
150-1000	1	Lump Sum	200000.0	TRAFFIC CONTROL - MSL00-0004-00(688)	200000.0
153-1300	1	EA	73914.48	FIELD ENGINEERS OFFICE TP 3	73914.48
201-1500	1	LS	1500000.0	CLEARING & GRUBBING -	1500000.0
205-0001	216216	CY	2.79	UNCLASS EXCAV	603242.64
208-0100	411210	CY	3.5	IN PLACE EMBANKMENT	1439235.0
208-0200	12644	CY	18.2	ROCK EMBANKMENT	230120.8
310-1101	87650	TN	15.7	GR AGGR BASE CRS, INCL MATL	1376105.0
318-3000	500	TN	16.8	AGGR SURF CRS	8400.0
402-1802	575	TN	79.88	RECYCLED ASPH CONC PATCHING, INCL BITUM MATL & H LIME	45931.0
402-1812	1150	TN	64.57	RECYCLED ASPH CONC LEVELING, INCL BITUM MATL & H LIME	74255.49
402-3121	21700	TN	55.7	RECYCLED ASPH CONC 25 MM SUPERPAVE, GP 1 OR 2, INCL BITUM MATL & H LIME	1208690.0
402-3130	11000	TN	61.44	RECYCLED ASPH CONC 12.5 MM SUPERPAVE, GP 2 ONLY, INCL BITUM MATL & H LIME	675840.0
402-3190	12400	TN	64.05	RECYCLED ASPH CONC 19 MM SUPERPAVE, GP 1 OR 2,INCL BITUM MATL & H LIME	794220.0
413-1000	20500	GL	2.0	BITUM TACK COAT	41000.0
432-0206	19400	SY	1.25	MILL ASPH CONC PVMT, 1 1/2 IN DEPTH	24250.0
433-1200	1662	SY	122.74	REINF CONC APPROACH SLAB, INCL SLOPED EDGE	203993.88
441-0014	314	SY	26.69	DRIVEWAY CONCRETE, 4 IN TK	8380.66
441-0016	3329	SY	36.21	DRIVEWAY CONCRETE, 6 IN TK	120543.09
441-0104	4260	SY	26.69	CONC SIDEWALK, 4 IN	113699.40
441-0106	2140	SY	36.21	CONC SIDEWALK, 6 IN	77489.40
441-0301	5	EA	2038.55	CONC SPILLWAY, TP 1	10192.75
441-0754	1900	SY	54.56	CONCRETE MEDIAN, 7 1/2 IN	103664.0
441-4020	220	SY	35.29	CONC VALLEY GUTTER, 6 IN	7763.8
441-6222	9452	LF	13.29	CONC CURB & GUTTER, 8 IN X 30 IN, TP 2	125617.07
441-6740	24348	LF	11.73	CONC CURB & GUTTER, 8 IN X 30 IN, TP 7	285602.04
446-1100	3330	LF	3.12	PVMT REINF FABRIC STRIPS, TP 2, 18 INCH WIDTH	10389.6
455-1000	250	SY	2.16	FILTER FABRIC FOR EMBANKMENT STABILIZATION	540.0
500-3200	1	CY	411.0	CLASS B CONCRETE	411.0
500-9999	430	CY	192.85	CLASS B CONC, BASE OR PVMT WIDENING	82925.5
550-1150	61	LF	21.47	STORM DRAIN PIPE, 15 IN, H 1-10	1309.66
550-1180	4603	LF	36.27	STORM DRAIN PIPE, 18 IN, H 1-10	166950.81
550-1181	248	LF	53.99	STORM DRAIN PIPE, 18 IN, H 10-15	13389.52
550-1182	286	LF	66.98	STORM DRAIN PIPE, 18 IN, H 15-20	19156.28
550-1240	265	LF	41.79	STORM DRAIN PIPE, 24 IN, H 1-10	11074.35
550-1242	435	LF	45.92	STORM DRAIN PIPE, 24 IN, H 15-20	19975.2
550-1300	145	LF	53.29	STORM DRAIN PIPE, 30 IN, H 1-10	7727.05
550-1301	221	LF	56.87	STORM DRAIN PIPE, 30 IN, H 10-15	12568.26
550-2180	699	LF	33.24	SIDE DRAIN PIPE, 18 IN, H 1-10	23234.76
550-3315	1	EA	565.5	SAFETY END SECTION 15 IN, STORM DRAIN, 4:1 SLOPE	565.5
550-3318	3	EA	612.15	SAFETY END SECTION 18 IN, STORM DRAIN, 4:1 SLOPE	1836.44
550-3324	6	EA	769.17	SAFETY END SECTION 24 IN, STORM DRAIN, 4:1 SLOPE	4615.01
550-3418	16	EA	562.15	SAFETY END SECTION 18 IN, SIDE DRAIN, 4:1 SLOPE	8994.4
550-3618	16	EA	569.69	SAFETY END SECTION 18 IN, SIDE DRAIN, 6:1 SLOPE	9115.04
550-4218	22	EA	451.98	FLARED END SECTION 18 IN, STORM DRAIN	9943.56
550-4224	8	EA	643.26	FLARED END SECTION 24 IN, STORM DRAIN	5146.08
550-4230	3	EA	761.29	FLARED END SECTION 30 IN, STORM DRAIN	2283.87
573-2006	8600	LF	8.82	UNDDR PIPE INCL DRAINAGE AGGR, 6 IN	75852.0
576-1018	220	LF	32.32	SLOPE DRAIN PIPE, 18 IN	7110.4
634-1200	225	EA	93.93	RIGHT OF WAY MARKERS	21134.25
635-1000	40	LF	52.13	BARRICADES	2085.20
641-1100	252	LF	46.25	GUARDRAIL, TP T	11655.0
641-1200	10873	LF	16.93	GUARDRAIL, TP W	184079.88
641-5001	15	EA	673.15	GUARDRAIL ANCHORAGE, TP 1	10097.25
641-5012	15	EA	1762.58	GUARDRAIL ANCHORAGE, TP 12	26438.69
643-0103	2590	LF	6.49	FIELD FENCE BARBED WIRE, 3 STRANDS	16809.10
643-8200	4800	LF	1.92	BARRIER FENCE (ORANGE), 4 FT	9216.0
668-1100	60	EA	2429.74	CATCH BASIN, GP 1	145784.4
668-1110	83	LF	168.54	CATCH BASIN, GP 1, ADDL DEPTH	13988.82

668-2100	3	EA	2360.78	DROP INLET, GP 1	7082.34
				Section Sub Total:	**$10,295,635.80**

Section Permanent Erosion Control

Item Number	Quantity	Units	Unit Price	Item Description	Cost
603-2024	756	SY	54.2	STN DUMPED RIP RAP, TP 1, 24 IN	40975.20
603-2181	1445	SY	45.21	STN DUMPED RIP RAP, TP 3, 18 IN	65328.45
603-7000	2201	SY	4.71	PLASTIC FILTER FABRIC	10366.71
700-6910	32	AC	1023.43	PERMANENT GRASSING	32749.76
700-7000	32	TN	59.64	AGRICULTURAL LIME	1908.48
700-7010	122	GL	22.32	LIQUID LIME	2723.04
700-8000	11	TN	292.83	FERTILIZER MIXED GRADE	3221.12
700-8100	1600	LB	2.31	FERTILIZER NITROGEN CONTENT	3696.0
710-9000	846	SY	2.33	PERMANENT SOIL REINFORCING MAT	1971.18
715-2200	5713	SY	2.46	BITUMINOUS TREATED ROVING, WATERWAYS	14053.98
716-2000	43500	SY	0.94	EROSION CONTROL MATS, SLOPES	40890.0
				Section Sub Total:	**$217,883.93**

Section Temporary Erosion Control

Item Number	Quantity	Units	Unit Price	Item Description	Cost
163-0232	16	AC	679.69	TEMPORARY GRASSING	10875.04
163-0240	144	TN	161.07	MULCH	23194.07
163-0300	10	EA	1655.76	CONSTRUCTION EXIT	16557.6
163-0501	3	EA	764.08	CONSTRUCT AND REMOVE SILT CONTROL GATE, TP 1	2292.24
163-0503	25	EA	529.93	CONSTRUCT AND REMOVE SILT CONTROL GATE, TP 3	13248.24
163-0520	1000	LF	17.42	CONSTRUCT AND REMOVE TEMPORARY PIPE SLOPE DRAIN	17420.0
163-0523	286	EA	46.4	CONSTRUCT AND REMOVE TEMPORARY DITCH CHECKS - TYPE C SILT FENCE	13270.4
163-0530	13349	LF	4.2	CONSTRUCT AND REMOVE BALED STRAW EROSION CHECK	56065.8
163-0541	8	EA	578.42	CONSTRUCT AND REMOVE ROCK FILTER DAMS	4627.36
163-0550	73	EA	282.9	CONSTRUCT AND REMOVE INLET SEDIMENT TRAP	20651.69
165-0010	12446	LF	0.78	MAINTENANCE OF TEMPORARY SILT FENCE, TP A	9707.88
165-0030	37916	LF	1.64	MAINTENANCE OF TEMPORARY SILT FENCE, TP C	62182.24
165-0040	286	EA	49.07	MAINTENANCE OF EROSION CONTROL CHECKDAMS/DITCH CHECKS	14034.02
165-0070	13349	LF	1.86	MAINTENANCE OF BALED STRAW EROSION CHECK	24829.14
165-0085	3	EA	170.84	MAINTENANCE OF SILT CONTROL GATE, TP 1	512.52
165-0087	25	EA	169.84	MAINTENANCE OF SILT CONTROL GATE, TP 3	4246.0
165-0101	16	EA	607.78	MAINTENANCE OF CONSTRUCTION EXIT	9724.48
165-0105	73	EA	96.97	MAINTENANCE OF INLET SEDIMENT TRAP	7078.80
165-0110	8	EA	241.61	MAINTENANCE OF ROCK FILTER DAM	1932.88
167-1000	2	EA	1278.47	WATER QUALITY MONITORING AND SAMPLING	2556.94
167-1500	24	MO	944.75	WATER QUALITY INSPECTIONS	22674.0
171-0010	12446	LF	1.63	TEMPORARY SILT FENCE, TYPE A	20286.98
171-0030	37916	LF	3.83	TEMPORARY SILT FENCE, TYPE C	145218.28
				Section Sub Total:	**$503,186.64**

Section Signing & Marking

Item Number	Quantity	Units	Unit Price	Item Description	Cost
636-1020	153	SF	16.67	HIGHWAY SIGNS, TP 1 MATL, REFL SHEETING, TP 3	2550.51
636-1029	10	SF	19.17	HIGHWAY SIGNS, TP 2 MATL, REFL SHEETING, TP 3	191.70
636-1033	558	SF	20.24	HIGHWAY SIGNS, TP 1 MATL, REFL SHEETING, TP 9	11293.91
636-1041	332	SF	27.6	HIGHWAY SIGNS, TP 2 MATL, REFL SHEETING, TP 9	9163.2
636-2070	1736	LF	8.71	GALV STEEL POSTS, TP 7	15120.56
653-0120	107	EA	72.49	THERMOPLASTIC PVMT MARKING, ARROW, TP 2	7756.42
653-0130	4	EA	95.75	THERMOPLASTIC PVMT MARKING, ARROW, TP 3	383.0
653-1501	46150	LF	0.44	THERMOPLASTIC SOLID TRAF STRIPE, 5 IN, WHITE	20306.0
653-1502	33069	LF	0.45	THERMOPLASTIC SOLID TRAF STRIPE, 5 IN, YELLOW	14881.05
653-1704	1092	LF	3.47	THERMOPLASTIC SOLID TRAF STRIPE, 24 IN, WHITE	3789.24
653-1804	10674	LF	1.68	THERMOPLASTIC SOLID TRAF STRIPE, 8 IN, WHITE	17932.32
653-3501	32355	GLF	0.33	THERMOPLASTIC SKIP TRAF STRIPE, 5 IN, WHITE	10677.15
653-6004	2641	SY	2.51	THERMOPLASTIC TRAF STRIPING, WHITE	6628.91
653-6006	1092	SY	2.57	THERMOPLASTIC TRAF STRIPING, YELLOW	2806.43
654-1001	261	EA	2.94	RAISED PVMT MARKERS TP 1	767.34
654-1003	387	EA	3.31	RAISED PVMT MARKERS TP 3	1280.97

657-1085	2226	LF	5.45	PREFORMED PLASTIC SOLID PVMT MKG, 8 IN, CONTRAST (BLACK-WHITE), TP PB	12131.7
657-3085	2226	GLF	2.92	PREFORMED PLASTIC SKIP PVMT MKG, 8 IN, CONTRAST (BLACK-WHITE), TP PB	6499.92
657-6085	2226	LF	5.83	PREFORMED PLASTIC SOLID PVMT MKG, 8 IN, CONTRAST (BLACK-YELLOW), TP PB	12977.58
				Section Sub Total:	**$157,137.94**

Section Signals

Item Number	Quantity	Units	Unit Price	Item Description	Cost
615-1200	355	LF	8.4	DIRECTIONAL BORE - 3 IN	2982.0
615-1200	2456	LF	8.4	DIRECTIONAL BORE - 6 IN	20630.4
639-2002	260	LF	4.06	STEEL WIRE STRAND CABLE, 3/8 IN	1055.6
639-3003	4	EA	5880.0	STEEL STRAIN POLE, TP III	23520.0
639-3004	4	EA	8487.32	STEEL STRAIN POLE, TP IV	33949.28
639-3004	1	EA	8487.32	STEEL STRAIN POLE, TP IV - INCLUDING 30 FT MAST ARM	8487.32
639-3004	1	EA	8487.32	STEEL STRAIN POLE, TP IV - INCLUDING 35 FT MAST ARM	8487.32
639-3004	1	EA	8487.32	STEEL STRAIN POLE, TP IV - INCLUDING 40 FT MAST ARM	8487.32
639-3004	2	EA	8487.32	STEEL STRAIN POLE, TP IV - INCLUDING 45 FT MAST ARM	16974.64
639-3004	5	EA	8487.32	STEEL STRAIN POLE, TP IV - INCLUDING 50 FT MAST ARM	42436.6
639-3004	3	EA	8487.32	STEEL STRAIN POLE, TP IV - INCLUDING 60 FT MAST ARM	25461.96
639-3004	3	EA	8487.32	STEEL STRAIN POLE, TP IV - INCLUDING 65 FT MAST ARM	25461.96
647-1000	1	LS	25279.07	TRAFFIC SIGNAL INSTALLATION NO - 1 - MODIFY SR 92	25279.07
647-1000	1	LS	25279.07	TRAFFIC SIGNAL INSTALLATION NO - 3 - ANHGAM ROAD	25279.07
647-1000	1	LS	25279.07	TRAFFIC SIGNAL INSTALLATION NO - 4 - ROSEDALE LANE	25279.07
647-1000	1	LS	25279.07	TRAFFIC SIGNAL INSTALLATION NO - 2 - ARNOLD ROAD	25279.07
647-1000	1	LS	25279.07	TRAFFIC SIGNAL INSTALLATION NO - 5 - ADJUST US 278	25279.07
647-2140	31	EA	1195.81	PULLBOX, PB-4	37070.11
647-2170	5	EA	1437.54	PULL BOX, PB-7	7187.7
682-6120	1190	LF	7.29	CONDUIT, RIGID, 2 IN	8675.1
682-6222	11835	LF	4.78	CONDUIT, NONMETL, TP 2, 2 IN	56571.3
682-6233	3100	LF	3.05	CONDUIT, NONMETL, TP 3, 2 IN	9455.0
935-1115	19500	LF	1.24	OUTSIDE PLANT FIBER OPTIC CABLE, LOOSE TUBE, SINGLE MODE, 48 FIBER	24180.0
935-1115	400	LF	1.24	OUTSIDE PLANT FIBER OPTIC CABLE, LOOSE TUBE, SINGLE MODE, 12 FIBER	496.0
935-3105	5	EA	577.73	FIBER OPTIC CLOSURE, UNDERGROUND, 48 FIBER	2888.65
935-3603	5	EA	584.38	FIBER OPTIC CLOSURE, FDC PRE-TERMINATED, TYPE A, 12-FIBER	2921.9
935-4010	36	EA	24.42	FIBER OPTIC SPLICE, FUSION	879.12
935-5050	36	EA	64.94	FIBER OPTIC PATCH CORD, SM	2337.84
935-6562	5	EA	1539.81	EXTERNAL TRANSCEIVER, DROP AND REPEAT, 1310 SINGLE MODE, (SIGNAL JOBS)	7699.04
935-8000	1	LS	1994.03	TESTING	1994.03
936-1001	2	EA	5081.18	CCTV SYSTEM, TYPE B	10162.36
938-1100	34	EA	4332.17	INTERSECTION VIDEO DETECTION SYSTEM ASSEMBLY, TYPE A	147293.78
938-1200	5	EA	381.74	PROGRAMMING MONITOR, TYPE A	1908.7
939-1191	2	EA	2807.56	VIDEO ENCODER, TYPE B	5615.12
939-8000	1	LS	3793.21	TESTING	3793.21
				Section Sub Total:	**$675,458.72**

Section BOX CULVERT ITEMS

Item Number	Quantity	Units	Unit Price	Item Description	Cost
207-0203	242	CY	37.37	FOUND BKFILL MATL, TP II	9043.53
500-3101	818	CY	238.02	CLASS A CONCRETE	194700.36
511-1000	85338	LB	0.89	BAR REINF STEEL	75950.82
				Section Sub Total:	**$279,694.72**

Section Bridge Culvert No. 1

Item Number	Quantity	Units	Unit Price	Item Description	Cost
960-0550	180	LF	1945.0	PRECAST THREE SIDED CULVERT, SINGLE BARREL -	350100.0
				Section Sub Total:	**$350,100.00**

Section Bridge No. 1

Item Number	Quantity	Units	Unit Price	Item Description	Cost
207-0203	35	CY	36.69	FOUND BKFILL MATL, TP II	1284.14
211-0300	425	CY	30.34	BRIDGE EXCAVATION, STREAM CROSSING	12894.5
500-0100	5367	SY	4.57	GROOVED CONCRETE	24527.19
500-1006	1	LS	1016370.0	SUPERSTR CONCRETE, CL AA, BR NO - 1 (1658)	1016370.0
500-2100	1368	LF	37.7	CONCRETE BARRIER	51573.60
500-3002	481	CY	459.26	CLASS AA CONCRETE	220904.06
501-2100	15285	LB	2.85	STR STEEL, SWAYBRACING	43562.25
507-9001	4241	LF	94.2	PSC BEAMS, AASHTO TYPE I, BR NO - 1	399502.2
507-9003	618	LF	104.94	PSC BEAMS, AASHTO TYPE III, BR NO - 1	64852.92
507-9033	1253	LF	169.8	PSC BEAMS, AASHTO, BULB TEE, 74 IN, BR NO - 1	212759.40
511-1000	76399	LB	0.6	BAR REINF STEEL	45839.4
511-3000	1	LS	241460.0	SUPERSTR REINF STEEL, BR NO - 1 (384347)	241460.0
520-0353	54	EA	132.73	H-PILE POINTS, HP 12 X 53	7167.41
520-1125	3240	LF	41.43	PILING IN PLACE, STEEL H, HP 12 X 53	134233.2
520-1147	2080	LF	44.22	PILING IN PLACE, STEEL H, HP 14 X 73	91977.59
520-4125	1	EA	0.95	LOAD TEST, STEEL H, HP 12 X 53 (IF REQD)	0.95
520-4147	1	EA	0.83	LOAD TEST, STEEL H, HP 14 X 73 (IF REQD)	0.83
520-5000	666	LF	156.12	PILOT HOLES	103975.92
525-1000	6	EA	115435.75	COFFERDAM	692614.5
547-2012	396	LF	175.0	PILE ENCASEMENT, 12 IN PILE	69300.0
603-2024	1460	SY	42.78	STN DUMPED RIP RAP, TP 1, 24 IN	62458.8
603-7000	1460	SY	3.31	PLASTIC FILTER FABRIC	4832.6
				Section Sub Total:	**$3,502,091.49**

Section Bridge No. 2

Item Number	Quantity	Units	Unit Price	Item Description	Cost
500-0100	693	SY	4.57	GROOVED CONCRETE	3167.01
500-1006	1	LS	150800.0	SUPERSTR CONCRETE, CL AA, BR NO - 2 (246)	150800.0
500-2100	148	LF	37.7	CONCRETE BARRIER	5579.6
500-3101	58	CY	362.53	CLASS A CONCRETE	21026.73
507-9003	782	LF	104.94	PSC BEAMS, AASHTO TYPE III, BR NO - 2	82063.08
511-1000	6882	LB	0.6	BAR REINF STEEL	4129.2
511-3000	1	LS	31807.0	SUPERSTR REINF STEEL, BR NO - 2 (50487)	31807.0
520-0573	24	EA	130.49	H-PILE POINTS, HP 14 X 73	3131.76
520-1147	950	LF	44.22	PILING IN PLACE, STEEL H, HP 14 X 73	42009.0
520-4147	1	EA	0.83	LOAD TEST, STEEL H, HP 14 X 73 (IF REQD)	0.83
603-2024	1090	SY	42.78	STN DUMPED RIP RAP, TP 1, 24 IN	46630.20
603-7000	1090	SY	3.31	PLASTIC FILTER FABRIC	3607.9
				Section Sub Total:	**$393,952.32**

Section Bridge No. 3

Item Number	Quantity	Units	Unit Price	Item Description	Cost
211-0200	375	CY	26.48	BRIDGE EXCAVATION, GRADE SEPARATION	9930.0
441-0004	1737	SY	39.46	CONC SLOPE PAV, 4 IN	68542.02
500-0100	1768	SY	4.57	GROOVED CONCRETE	8079.76
500-1006	1	LS	372097.0	SUPERSTR CONCRETE, CL AA, BR NO - 3 (607)	372097.0
500-2100	396	LF	37.7	CONCRETE BARRIER	14929.2
500-3002	350	CY	459.26	CLASS AA CONCRETE	160741.0
507-9002	1133	LF	100.75	PSC BEAMS, AASHTO TYPE II, BR NO - 3	114149.75
507-9030	871	LF	121.85	PSC BEAMS, AASHTO, BULB TEE, 54 IN, BR NO - 3	106131.34
511-1000	56925	LB	0.6	BAR REINF STEEL	34155.0
511-3000	1	LS	102471.0	SUPERSTR REINF STEEL, BR NO - 3 (162639)	102471.0
520-0573	12	EA	130.49	H-PILE POINTS, HP 14 X 73	1565.88
520-1147	1570	LF	44.22	PILING IN PLACE, STEEL H, HP 14 X 73	69425.4
520-4147	1	EA	0.83	LOAD TEST, STEEL H, HP 14 X 73 (IF REQD)	0.83
				Section Sub Total:	**$1,062,218.19**

Section Lighting

Item Number	Quantity	Units	Unit Price	Item Description	Cost
681-4150	2	EA	4300.0	LIGHTING STD, 15 FT MH, POST TOP	8600.0

681-6514	2	EA	375.0	LUMINAIRE, TP 5, 100 W, HP SODIUM	750.0
681-6614	9	EA	410.0	LUMINAIRE, TP A, 100 WATT, HP SODIUM	3690.0
682-1404	2100	LF	0.71	CABLE, TP XHHW, AWG NO 10	1491.0
682-1406	100	LF	1.09	CABLE, TP XHHW, AWG NO 6	109.00
682-1408	200	LF	2.5	CABLE, TP XHHW, AWG NO 2	500.0
682-6108	350	LF	6.32	CONDUIT, RIGID, 3/4 IN	2212.0
682-6110	50	LF	6.04	CONDUIT, RIGID, 1 IN	302.0
682-9000	1	LS	4119.36	MAIN SERVICE PICK UP POINT	4119.36
682-9022	1	EA	737.87	ELECTRICAL JUNCTION BOX, REINFORCED PLASTIC MORTAR	737.87
682-9023	2	EA	127.88	ELECTRICAL JUNCTION BOX, GALVANIZED, SIZE -	255.76
				Section Sub Total:	**$22,766.99**

Total Estimated Cost: $17,460,126.74

Subtotal Construction Cost	**$17,460,126.74**
E&C Rate 5.0 %	$873,006.34
Inflation Rate 0.0 % @ 0 Years	$0.00
Total Construction Cost	**$18,333,133.08**
Right Of Way	4954804.00
ReImb. Utilities	344625.00
Grand Total Project Cost	**$23,632,562.08**

Date 5/7/2010

P.I. Number **0004688** County **Paulding**

Project Number **MSL00-0004-00(688)**

Special Provision, Section 109-Measurement and Payment

FUEL PRICE ADJUSTMENT (*ENGLISH 125% MAX)*

ENTER FPL DIESEL	2.877
ENTER FPM DIESEL	6.473

ENTER FPL UNLEADED	2.716
ENTER FPM UNLEADED	6.111

http://www.dot.ga.gov/doingbusiness/Materials/Pages/asphaltcementindex.aspx

INCREASE ADJUSTMENT
125.00%

INCREASE ADJUSTMENT
125.00%

ROADWAY ITEMS	QUANTITY	DIESEL FACTOR	GALLONS DIESEL	UNLEADED FACTOR	GALLONS UNLEADED	REMARKS
Excavations paid as specified by Sections 205 **(CUBIC YARD)**	217000.000	0.29	62930.00	0.15	32550.00	
Excavations paid as specified by Sections 206 **(CUBIC YARD)**	412000.000	0.29	119480.00	0.15	61800.00	
GAB paid as specified by the ton under Section 310 **(TON)**	87650.000	0.29	25418.50	0.24	21036.00	
Hot Mix Asphalt paid as specified by the ton under Sections 400 **(TON)**		2.90		0.71		
Hot Mix Asphalt paid as specified by the ton under Sections 402 **(TON)**	46900.000	2.90	136010.00	0.71	33299.00	
PCC Pavement paid as specified by the square yard under Section 430 **(SY)**		0.25		0.20		

BRIDGE ITEMS	Quantity	Unit Price	QF/1000	Diesel Factor	Gallons Diesel	Unleaded Factor	Gallons Unleaded	REMARKS
Bridge Excavation (CY) Section 211	800.00	30.34	24.2720	8.00	194.18	1.50	36.41	
Class __Concrete (CY) Section 500	832.00	459.26	382.1043	8.00	3056.83	1.50	573.16	Class AA
Class __Concrete (CY) Section 500	58.00	362.53	21.0267	8.00	168.21	1.50	31.54	Class A
Class __Concrete (CY) Section 500				8.00		1.50		
Superstru Con Class__(CY) Section 500	2511.00	613.00	1539.2430	8.00	12313.94	1.50	2308.86	Class AA
Superstru Con Class__(CY) Section 500				8.00		1.50		
Superstru Con Class__(CY) Section 500				8.00		1.50		
Concrete Handrail (LF) Section 500				8.00		1.50		
Concrete Barrier (LF) Section 500	1912.00	37.70	72.0824	8.00	576.66	1.50	108.12	

BRIDGE ITEMS	Quantity	Unit Price	QF/1000	Diesel Factor	Gallons Diesel	Unleaded Factor	Gallons Unleaded	REMARKS
SECTION 507	1253.00	169.80	212.7594	8.00	1702.08	1.50	319.14	section 507 (74in bulb tee)
SECTION 507	871.00	121.85	106.1314	8.00	849.05	1.50	159.20	section 507 (54in bulb tee)
PSC Beams_____ (LF) Section 507	4241.00	94.20	399.5022	8.00	3196.02	1.50	599.25	Type 1
PSC Beams_____ (LF) Section 507	1133.00	100.75	114.1498	8.00	913.20	1.50	171.22	Type 2
PSC Beams_____ (LF) Section 507	1400.00	104.94	146.9160	8.00	1175.33	1.50	220.37	Type 3
Stru Reinf Plan Quantity(LB) Section 511	597473.00	0.60	358.4838	8.00	2867.87	1.50	537.73	
Stru Reinf Plan Quantity(LB) Section 511				8.00		1.50		
Bar Reinf Steel (LB) Section 511	140206.00	0.60	84.1236	8.00	672.99	1.50	126.19	
Piling___inch (LF) Section 520	3240.00	41.43	134.2332	8.00	1073.87	1.50	201.35	12 inch
Piling___inch (LF) Section 520	4600.00	44.22	203.4120	8.00	1627.30	1.50	305.12	14 inch
Piling___inch (LF) Section 520				8.00		1.50		
Piling___inch (LF) Section 520				8.00		1.50		
Piling___inch (LF) Section 520				8.00		1.50		
Piling___inch (LF) Section 520				8.00		1.50		
Drilled Caisson,___ (LF) Section 524				8.00		1.50		
Drilled Caisson,___ (LF) Section 524				8.00		1.50		
Drilled Caisson,___ (LF) Section 524				8.00		1.50		
Pile Encasement,___(LF) Section 547	396.00	175.00	69.3000	8.00	554.40	1.50	103.95	12 inch
Pile Encasement,___(LF) Section 547				8.00		1.50		

SUM QF DIESEL=	**374780.42**	**SUM QF UNLEADED=**	**154486.61**

DIESEL PRICE ADJUSTMENT($)	**$1,239,979.75**
UNLEADED PRICE ADJUSTMENT($)	**$482,523.48**

ASPHALT CEMENT PRICE ADJUSTMENT
(BITUMINOUS TACK COAT 125% MAX)

APPLICABLE TO CONTRACTS/PROJECTS CONTAINING THE 413 SPECIFICATION, SECTION 413.5.01 ADJUSTMENTS
ASPHALT PRICE ADJUSTMENT FOR BITUMINOUS TACK COAT

http://www.dot.ga.gov/doingbusiness/Materials/Pages/asphaltcementindex.aspx

ENTER APL 504 **ENTER APM** 1134

125.00%	INCREASE ADJUSTMENT

L.I.N.	TYPE	TACK (GALLONS)	TACK (TONS)	REMARKS
		20500	88.0496	

TMT = 88.0496

PRICE ADJUSTMENT($)	$53,252.37

400 / 402 ASPHALT CEMENT PRICE ADJUSTMENT 125% MAX

ENTER APL 522 **ENTER APM** 1174.5

http://www.dot.ga.gov/doingbusiness/Materials/Pages/asphaltcementindex.aspx

125.00%	INCREASE ADJUSTMENT

L.I.N. / Spec Number	MIX TYPE	HMA	JMF AC%	AC	REMARKS
	12.5 mm SP	11000	5.00	550.00	
			5.00		
	19 mm SP	12400	5.00	620.00	
	25 mm SP	21700	5.00	1085.00	
			5.00		
	12.5 mm SP	575	5.00	28.75	patching
	12.5 mm SP	1150	5.00	57.50	leveling
			5.00		
			5.00		
			5.00		
			5.00		
			5.00		
			5.00		
			5.00		
			5.00		
			TMT =	2341.25	

PRICE ADJUSTMENT($)	$1,466,559.00

ASPHALT CEMENT PRICE ADJUSTMENT FOR BITUMINOUS TACK COAT(Surface Treatment 125% MAX)

APPLICABLE TO CONTRACTS CONTAINING THE 413 SPEC. SECTION 413.5.01 ADJUSTMENTS ASPHALT PRICE ADJUSTMENT FOR BITUMINOUS TACK COAT

http://www.dot.ga.gov/doingbusiness/Materials/Pages/asphaltcementindex.aspx

ENTER APL 504 ENTER APM 1134

125.00%	INCREASE ADJUSTMENT

Use this side for Asphalt Emulsion Only

L.I.N.	TYPE	ASPHALT EMULSION (GALLONS)

TMT =

REMARKS:

Use this side for Asphalt Cement Only

L.I.N.	TYPE	TACK (GALLONS)

TMT =

REMARKS:

MONTHLY PRICE ADJUSTMENT($)	

ADJUSTMENT SUMMARY

FUEL PRICE ADJUSTMENT (*ENGLISH 125% MAX)*

DIESEL PRICE ADJUSTMENT($)	$1,239,979.75
UNLEADED PRICE ADJUSTMENT($)	$482,523.48
ASPHALT CEMENT PRICE ADJUSTMENT (BITUMINOUS TACK COAT 125% MAX)	$53,252.37
400 / 402 ASPHALT CEMENT PRICE ADJUSTMENT 125% MAX	$1,466,559.00
ASPHALT CEMENT PRICE ADJUSTMENT FOR BITUMINOUS TACK COAT(Surface Treatment 125% MAX)	

REMARKS:

TOTAL ADJUSTMENTS	$3,242,314.60

DWM 10/08

Project Location Map

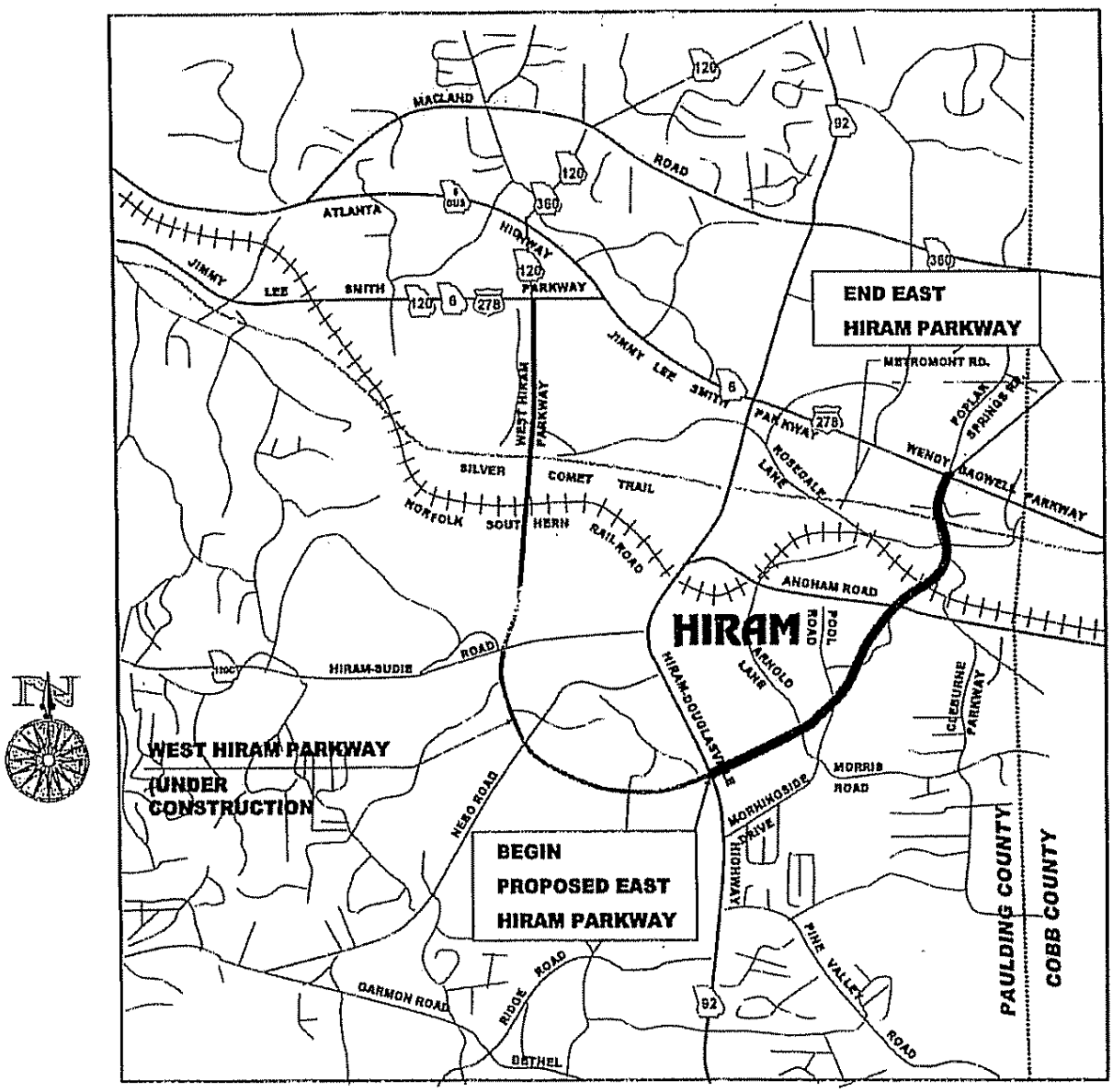

schematic.dgn 6/4/2010 2:40:16 PM

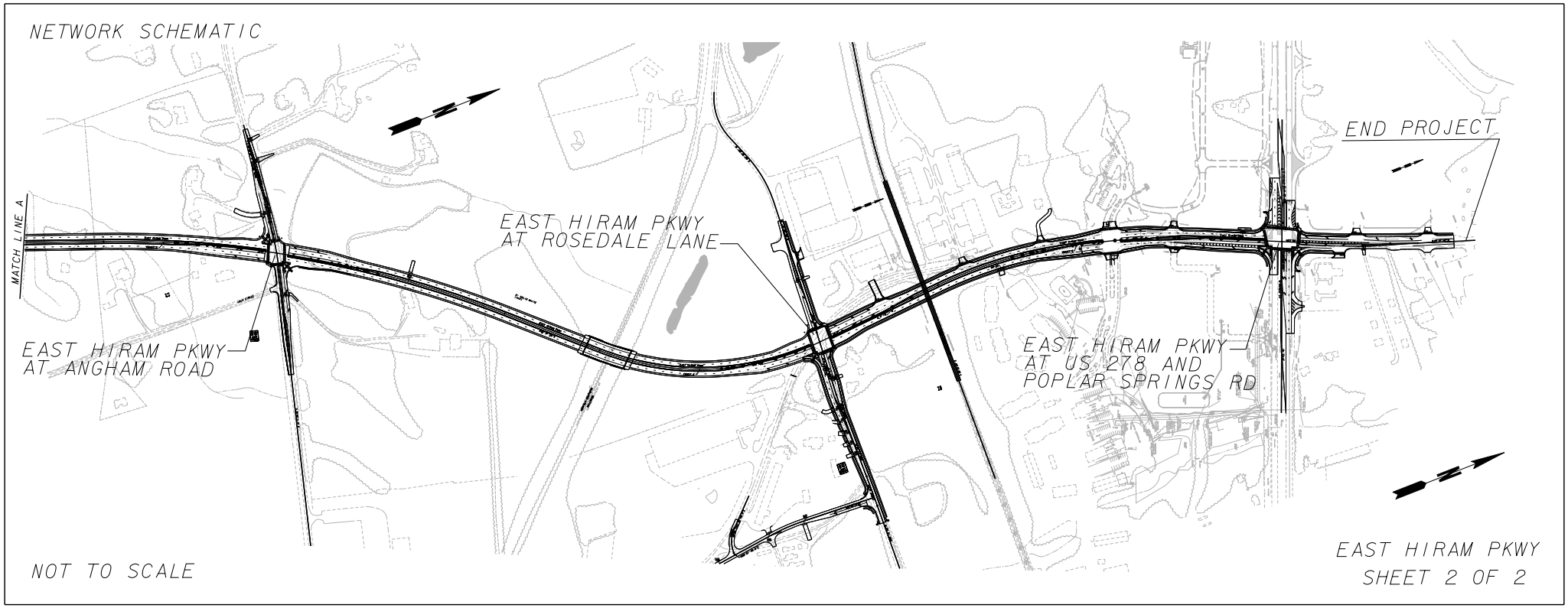

schematic2.dgn 6/4/2010 2:40:49 PM

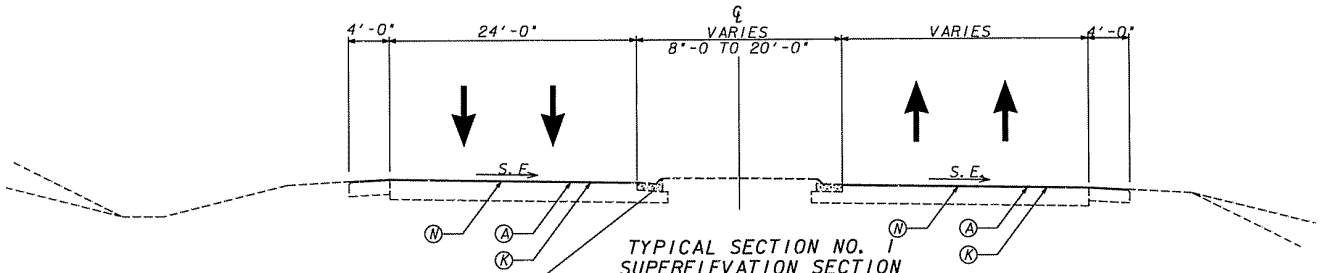

TYPICAL SECTION NO. 1
SUPERELEVATION SECTION
WEST HIRAM PARKWAY

APPLIES: STA. 4+00 TO STA. 9+80 RT
STA. 9+02 TO STA. 9+80 LT

SLOPE CONTROLS		
SLOPE	CUT	FILL
4:1	0-10'	0-10'
2:1	OVER 10'	OVER 10' *

* GUARDRAIL IS REQUIRED ON ALL FILL SLOPES GREATER THAN 4:1

△ SLOPE 3/4" / 1'-0" OR RATE OF S.E. WHICHEVER IS GREATER

□ SLOPE AS FOLLOWS:
S.E. RATE OF 0.03'/FT OR LESS USE 1/2" IN 1'-0"
S.E. RATE OF 0.04'/FT, USE 3/8" IN 1'-0"
S.E. RATE OF 0.05'/FT, USE 1/4" IN 1'-0"
S.E. RATE OF 0.06'/FT, USE 1/8" IN 1'-0"
S.E. RATE OF 0.08'/FT, USE +0.01'/FT

ALGEBRAIC DIFFERENCE IN PAVING AND SHOULDER SLOPES NOT TO EXCEED 0.08'/FT

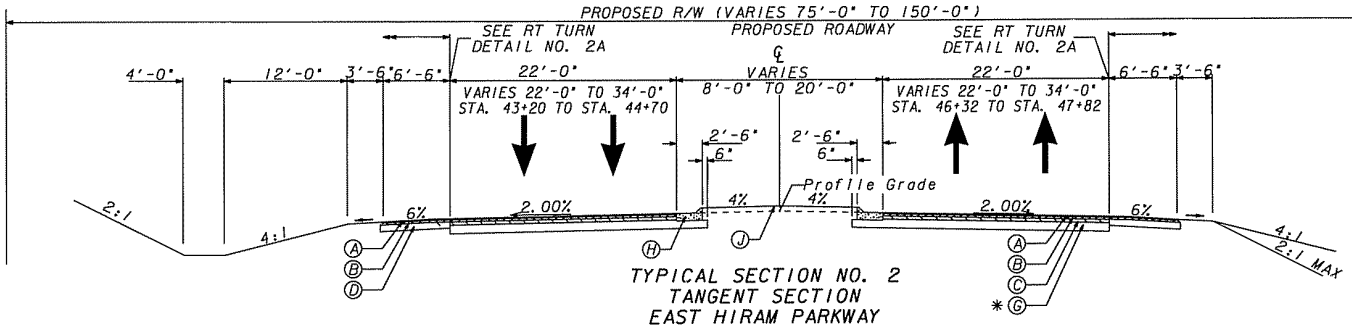

TYPICAL SECTION NO. 2
TANGENT SECTION
EAST HIRAM PARKWAY

APPLIES: STA. 10+25 TO STA. 13+65
STA. 39+04 TO STA. 49+66
STA. 51+06 TO STA. 57+28
STA. 75+03 TO STA. 89+67
STA. 111+66 TO STA. 113+28

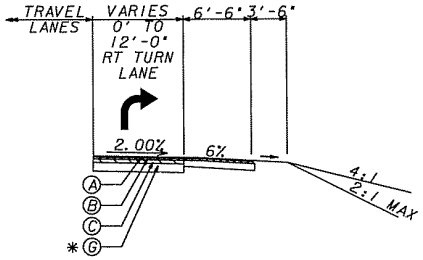

TYPICAL SECTION NO. 2A
RT TURN DETAIL
EAST HIRAM PARKWAY

APPLIES: STA. 41+17 TO STA. 44+97 RT
STA. 46+06 TO STA. 49+66 LT
STA. 77+38 TO STA. 81+18 RT

REQUIRED PAVEMENT

(A) 165 LBS/SY RECYCLED ASPH CONC 12.5 MM SUPERPAVE, GP 2 ONLY, INCL BITUM & H LIME
(B) 220 LBS/SY RECYCLED ASPH CONC 19 MM SUPERPAVE, GP 1 OR 2, INCL BITUM & H LIME
(C) 440 LBS/SY RECYCLED ASPH CONC 25 MM SUPERPAVE, GP 1 OR 2, INCL BITUM & H LIME
(D) GRADED AGGREGATE BASE, 6"
(E) GRADED AGGREGATE BASE, 10"
(F) GRADED AGGREGATE BASE, 12"
(G) GRADED AGGREGATE BASE, 14"
(H) 8"X30" CONC. CURB & GUTTER, GA. STD. 9032 B. TYPE 7
(I) 8"X30" CONC. CURB & GUTTER, GA. STD. 9032 B. TYPE 2
(J) 7 1/2" CONCRETE MEDIAN, WITH TYPE 7 CURB FACE
(K) MILL ASPH CONC PVMT, 1 1/2 IN DEPTH
(L) 4" CONCRETE SIDEWALK
(M) 6" CONCRETE SIDEWALK
(N) RECYCLED ASPH CONC LEVELING, INCL BITUM MATL & H LIME

* ADDITIONAL 4" THICKNESS OF GRADED AGGREGATE BASE REQUIRED FROM STA. 49+00 TO STA. 54+00

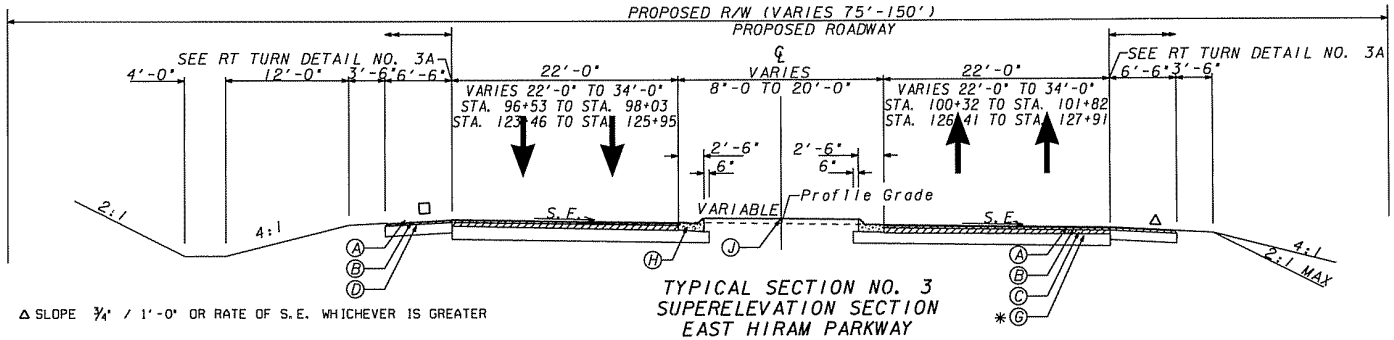

TYPICAL SECTION NO. 3
SUPERELEVATION SECTION
EAST HIRAM PARKWAY

APPLIES: STA. 13+65 TO STA. 20+65
STA. 28+15 TO STA. 39+04
STA. 57+28 TO STA. 75+03
STA. 89+67 TO STA. 111+66
STA. 113+28 TO STA. 114+12
STA. 116+77 TO STA. 124+71

△ SLOPE 3/4" / 1'-0" OR RATE OF S.E. WHICHEVER IS GREATER

□ SLOPE AS FOLLOWS:
S.E. RATE OF 0.03'/FT OR LESS USE 1/2" IN 1'-0"
S.E. RATE OF 0.04'/FT, USE 3/8" IN 1'-0"
S.E. RATE OF 0.05'/FT, USE 1/4" IN 1'-0"
S.E. RATE OF 0.06'/FT, USE 1/8" IN 1'-0"
S.E. RATE OF 0.08'/FT, USE +0.01'/FT

ALGEBRAIC DIFFERENCE IN PAVING AND SHOULDER SLOPES NOT TO EXCEED 0.08'/FT

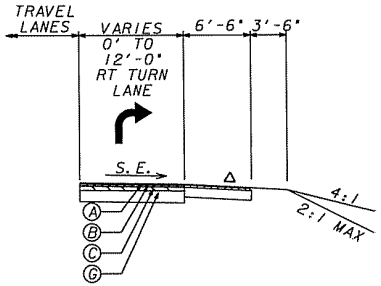

TYPICAL SECTION 3A
RT TURN DETAIL
EAST HIRAM PARKWAY

APPLIES: STA. 11+02 TO STA. 14+82 LT
STA. 64+74 TO STA. 68+54 LT
STA. 94+35 TO STA. 98+77 RT
STA. 99+58 TO STA 103+38 LT
STA. 122+71 TO STA. 124+71 RT

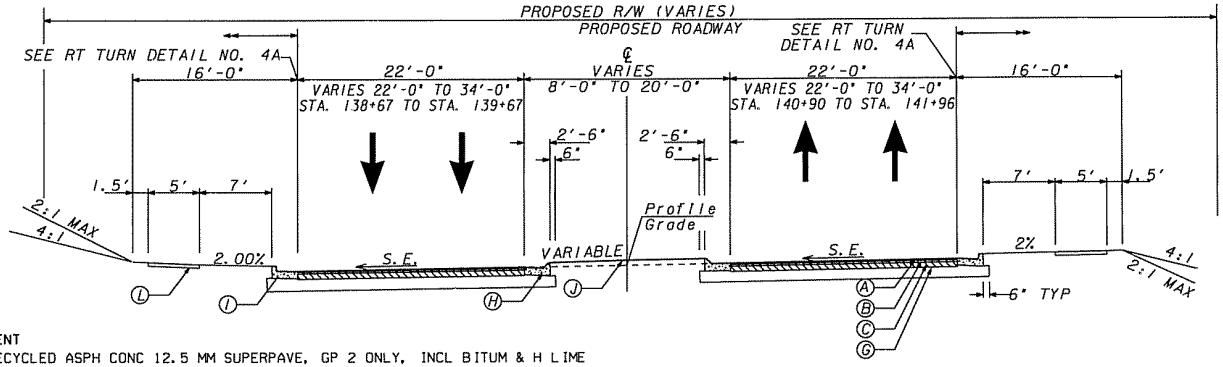

TYPICAL SECTION NO. 4
SUPERELEVATION SECTION
EAST HIRAM PARKWAY

APPLIES: STA. 124+71 TO STA. 127+53
STA. 130+47 TO STA. 146+52

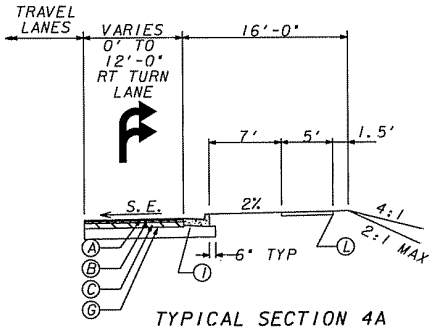

TYPICAL SECTION 4A
RT TURN DETAIL
EAST HIRAM PARKWAY

APPLIES: STA. 126+58 TO STA. 130+38 LT
STA. 136+81 TO STA. 139+62 RT
STA. 140+98 TO STA. 142+76 LT
STA. 143+93 TO STA. 147+09 RT

REQUIRED PAVEMENT
- Ⓐ 165 LBS/SY RECYCLED ASPH CONC 12.5 MM SUPERPAVE, GP 2 ONLY, INCL BITUM & H LIME
- Ⓑ 220 LBS/SY RECYCLED ASPH CONC 19 MM SUPERPAVE, GP 1 OR 2, INCL BITUM & H LIME
- Ⓒ 440 LBS/SY RECYCLED ASPH CONC 25 MM SUPERPAVE, GP 1 OR 2, INCL BITUM & H LIME
- Ⓓ GRADED AGGREGATE BASE, 6"
- Ⓔ GRADED AGGREGATE BASE, 10"
- Ⓕ GRADED AGGREGATE BASE, 12"
- Ⓖ GRADED AGGREGATE BASE, 14"
- Ⓗ 8"X30" CONC. CURB & GUTTER, GA. STD. 9032 B. TYPE 7
- Ⓘ 8"X30" CONC. CURB & GUTTER, GA. STD. 9032 B. TYPE 2
- Ⓙ 7 1/2" CONCRETE MEDIAN, WITH TYPE 7 CURB FACE
- Ⓚ MILL ASPH CONC PVMT, 1 1/2 IN DEPTH
- Ⓛ 4" CONCRETE SIDEWALK
- Ⓜ 6" CONCRETE SIDEWALK
- Ⓝ RECYCLED ASPH CONC LEVELING, INCL BITUM MATL & H LIME

* ADDITIONAL 4" THICKNESS OF GRADED AGGREGATE BASE REQUIRED FROM STA. 96+00 TO STA. 101+00

Hatch Mott MacDonald
2550 Heritage Ct. SE, Suite 250 Atlanta, GA 30339

NTS

REVISION DATES

STATE OF GEORGIA
DEPARTMENT OF TRANSPORTATION
OFFICE: CONSULTANT DESIGN
TYPICAL SECTIONS
EAST HIRAM PARKWAY

DRAWING No. 5-02

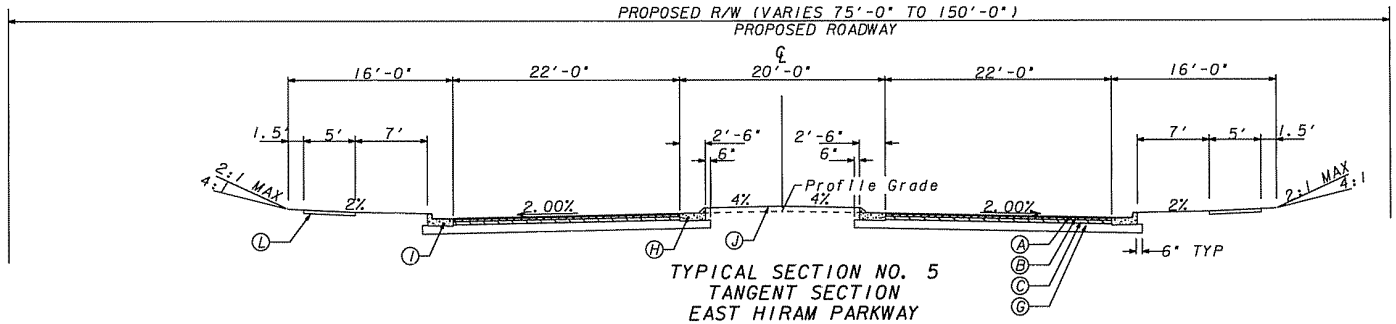

TYPICAL SECTION NO. 5
TANGENT SECTION
EAST HIRAM PARKWAY

APPLIES: STA. 127+53 TO STA. 130+47
STA. 146+52 TO STA. 148+36.04

△ SLOPE 3/4" / 1'-0" OR RATE OF S.E. WHICHEVER IS GREATER

□ SLOPE AS FOLLOWS:
S.E. RATE OF 0.03'/FT OR LESS USE 1/2" IN 1'-0"
S.E. RATE OF 0.04'/FT, USE 3/8" IN 1'-0"
S.E. RATE OF 0.05'/FT, USE 1/4" IN 1'-0"
S.E. RATE OF 0.06'/FT, USE 1/8" IN 1'-0"
S.E. RATE OF 0.08'/FT, USE +0.01'/FT

ALGEBRAIC DIFFERENCE IN PAVING AND SHOULDER SLOPES NOT TO EXCEED 0.08'/FT

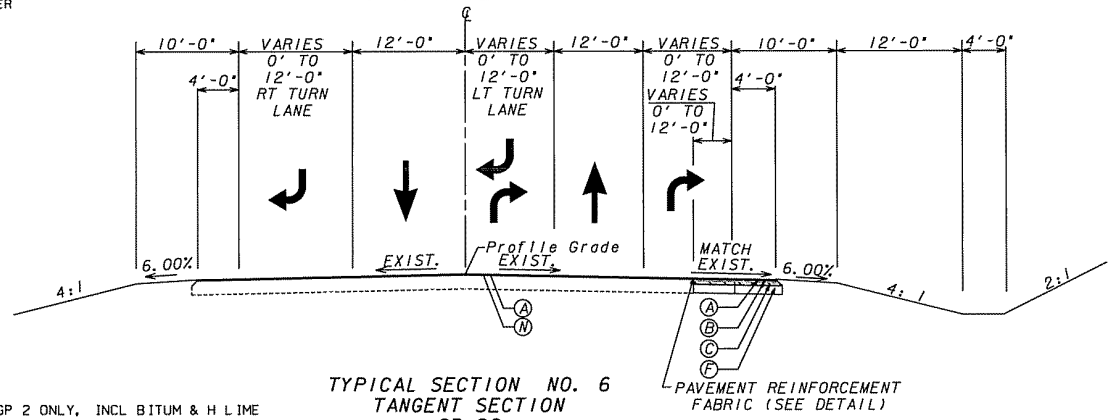

TYPICAL SECTION NO. 6
TANGENT SECTION
SR 92

APPLIES: STA. 24+50 TO 33+00

REQUIRED PAVEMENT
- (A) 165 LBS/SY RECYCLED ASPH CONC 12.5 MM SUPERPAVE, GP 2 ONLY, INCL BITUM & H LIME
- (B) 220 LBS/SY RECYCLED ASPH CONC 19 MM SUPERPAVE, GP 1 OR 2, INCL BITUM & H LIME
- (C) 440 LBS/SY RECYCLED ASPH CONC 25 MM SUPERPAVE, GP 1 OR 2, INCL BITUM & H LIME
- (D) GRADED AGGREGATE BASE, 6"
- (E) GRADED AGGREGATE BASE, 10"
- (F) GRADED AGGREGATE BASE, 12"
- (G) GRADED AGGREGATE BASE, 14"
- (H) 8"X30" CONC. CURB & GUTTER, GA. STD. 9032 B. TYPE 7
- (I) 8"X30" CONC. CURB & GUTTER, GA. STD. 9032 B. TYPE 2
- (J) 7 1/2" CONCRETE MEDIAN, WITH TYPE 7 CURB FACE
- (K) MILL ASPH CONC PVMT, 1 1/2 IN DEPTH
- (L) 4" CONCRETE SIDEWALK
- (M) 6" CONCRETE SIDEWALK
- (N) RECYCLED ASPH CONC LEVELING, INCL BITUM MATL & H LIME

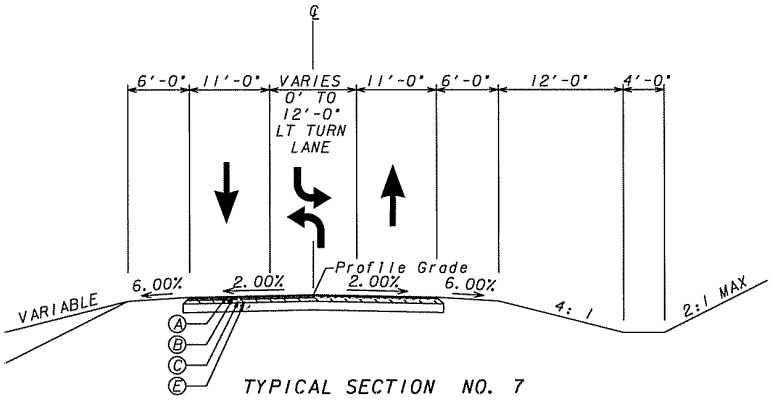

TYPICAL SECTION NO. 7
TANGENT SECTION

APPLIES: ARNOLD LANE STA. 9+50 TO STA. 13+96
ARNOLD LANE STA. 16+04 TO STA. 18+26
POOL ROAD STA. 0+50 TO STA. 1+01
LULA CIRCLE STA. 8+91 TO STA. 12+10
OLD CLEBURNE PARKWAY STA. 7+00 TO STA. 10+00

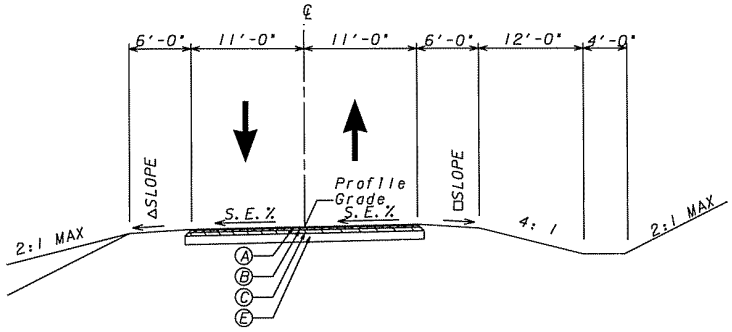

TYPICAL SECTION NO. 8
SUPER ELEVATION SECTION

APPLIES: ARNOLD LANE STA. 18+26 TO 20+50
POOL ROAD STA. 1+01 TO 6+05

Δ SLOPE ¾" / 1'-0" OR RATE OF S.E. WHICHEVER IS GREATER

□ SLOPE AS FOLLOWS:
S.E. RATE OF 0.03'/FT OR LESS USE ½" IN 1'-0"
S.E. RATE OF 0.04'/FT, USE ⅜" IN 1'-0"
S.E. RATE OF 0.05'/FT, USE ¼" IN 1'-0"
S.E. RATE OF 0.06'/FT, USE ⅛" IN 1'-0"
S.E. RATE OF 0.08'/FT, USE +0.01'/FT

ALGEBRAIC DIFFERENCE IN PAVING AND SHOULDER
SLOPES NOT TO EXCEED 0.08'/FT

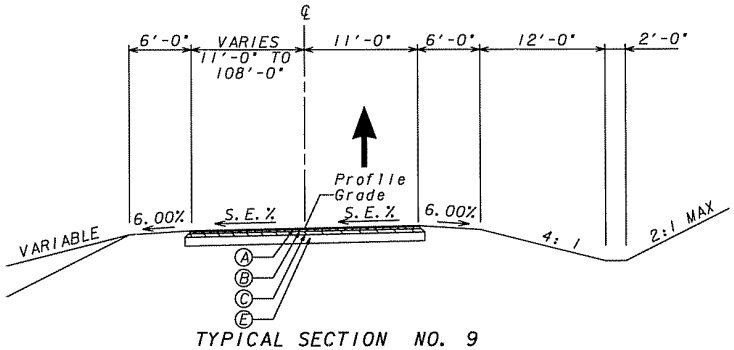

TYPICAL SECTION NO. 9
SUPER ELEVATION SECTION
APPLIES: POOL ROAD CUL-DE-SAC STA. 4+00 TO 5+00

REQUIRED PAVEMENT
Ⓐ 165 LBS/SY RECYCLED ASPH CONC 12.5 MM SUPERPAVE, GP 2 ONLY, INCL BITUM & H LIME
Ⓑ 220 LBS/SY RECYCLED ASPH CONC 19 MM SUPERPAVE, GP 1 OR 2, INCL BITUM & H LIME
Ⓒ 440 LBS/SY RECYCLED ASPH CONC 25 MM SUPERPAVE, GP 1 OR 2, INCL BITUM & H LIME
Ⓓ GRADED AGGREGATE BASE, 6"
Ⓔ GRADED AGGREGATE BASE, 10"
Ⓕ GRADED AGGREGATE BASE, 12"
Ⓖ GRADED AGGREGATE BASE, 14"
Ⓗ 8"X30" CONC. CURB & GUTTER, GA. STD. 9032 B. TYPE 7
Ⓘ 8"X30" CONC. CURB & GUTTER, GA. STD. 9032 B. TYPE 2
Ⓙ 7½" CONCRETE MEDIAN, WITH TYPE 7 CURB FACE
Ⓚ MILL ASPH CONC PVMT, 1½ IN DEPTH
Ⓛ 4" CONCRETE SIDEWALK
Ⓜ 6" CONCRETE SIDEWALK
Ⓝ RECYCLED ASPH CONC LEVELING, INCL BITUM MATL & H LIME

Hatch Mott MacDonald
2550 Heritage Ct. SE, Suite 250 Atlanta, GA 30339

NTS

REVISION DATES

STATE OF GEORGIA
DEPARTMENT OF TRANSPORTATION
OFFICE: CONSULTANT DESIGN
TYPICAL SECTIONS
EAST HIRAM PARKWAY

DRAWING No. 5-04

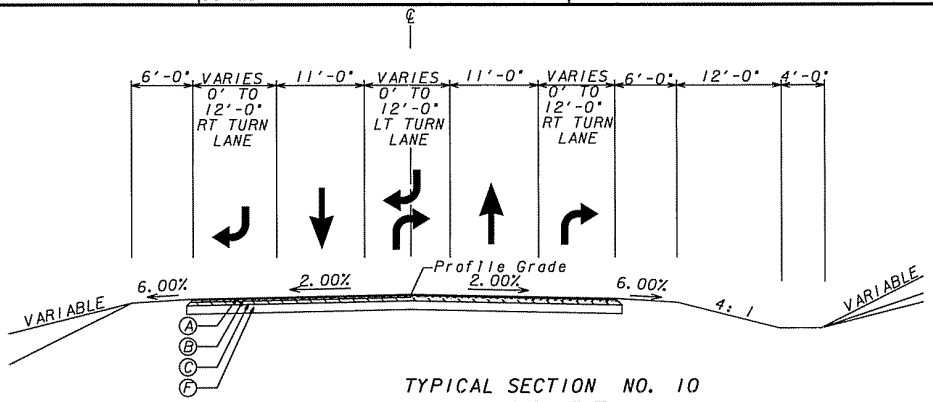

TYPICAL SECTION NO. 10
TANGENT SECTION

APPLIES: ANGHAM ROAD STA. 3+25 TO STA. 6+60
ANGHAM ROAD STA. 10+35 TO STA. 14+75
CLEBURNE PARKWAY STA. 10+24 TO STA. 14+10
CLEBURNE PARKWAY STA. 17+18 TO STA. 19+35

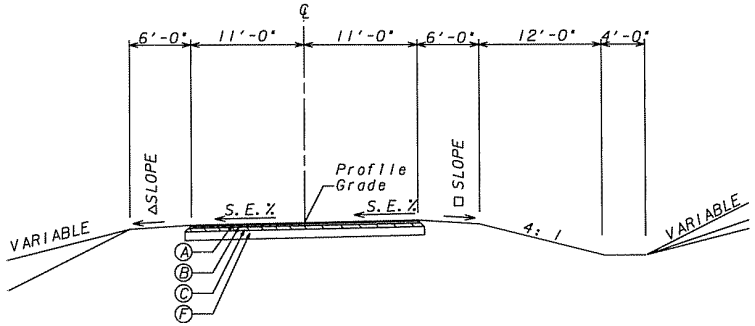

TYPICAL SECTION NO. 11
SUPER ELEVATION SECTION

APPLIES: ANGHAM ROAD STA. 6+60 TO STA. 7+70
ANGHAM ROAD STA. 10+21 TO STA. 10+35
CLEBURNE PARKWAY STA. 7+25 TO STA. 10+24
CLEBURNE PARKWAY STA. 14+10 TO STA. 17+18

Δ SLOPE 3/4" / 1'-0" OR RATE OF S.E. WHICHEVER IS GREATER

□ SLOPE AS FOLLOWS:
S.E. RATE OF 0.03'/FT OR LESS USE 1/2" IN 1'-0"
S.E. RATE OF 0.04'/FT, USE 3/8" IN 1'-0"
S.E. RATE OF 0.05'/FT, USE 1/4" IN 1'-0"
S.E. RATE OF 0.06'/FT, USE 1/8" IN 1'-0"
S.E. RATE OF 0.08'/FT, USE +0.01'/FT

ALGEBRAIC DIFFERENCE IN PAVING AND SHOULDER SLOPES NOT TO EXCEED 0.08'/FT

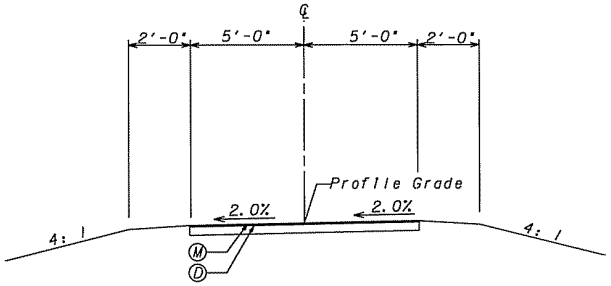

TYPICAL SECTION NO. 12
TANGENT SECTION

APPLIES: SILVER COMET TRAIL STA. 14+00 TO 24+50

REQUIRED PAVEMENT
- (A) 165 LBS/SY RECYCLED ASPH CONC 12.5 MM SUPERPAVE, GP 2 ONLY, INCL BITUM & H LIME
- (B) 220 LBS/SY RECYCLED ASPH CONC 19 MM SUPERPAVE, GP 1 OR 2, INCL BITUM & H LIME
- (C) 440 LBS/SY RECYCLED ASPH CONC 25 MM SUPERPAVE, GP 1 OR 2, INCL BITUM & H LIME
- (D) GRADED AGGREGATE BASE, 6"
- (E) GRADED AGGREGATE BASE, 10"
- (F) GRADED AGGREGATE BASE, 12"
- (G) GRADED AGGREGATE BASE, 14"
- (H) 8"X30" CONC. CURB & GUTTER, GA. STD. 9032 B. TYPE 7
- (I) 8"X30" CONC. CURB & GUTTER, GA. STD. 9032 B. TYPE 2
- (J) 7 1/2" CONCRETE MEDIAN, WITH TYPE 7 CURB FACE
- (K) MILL ASPH CONC PVMT, 1 1/2 IN DEPTH
- (L) 4" CONCRETE SIDEWALK
- (M) 6" CONCRETE SIDEWALK
- (N) RECYCLED ASPH CONC LEVELING, INCL BITUM MATL & H LIME

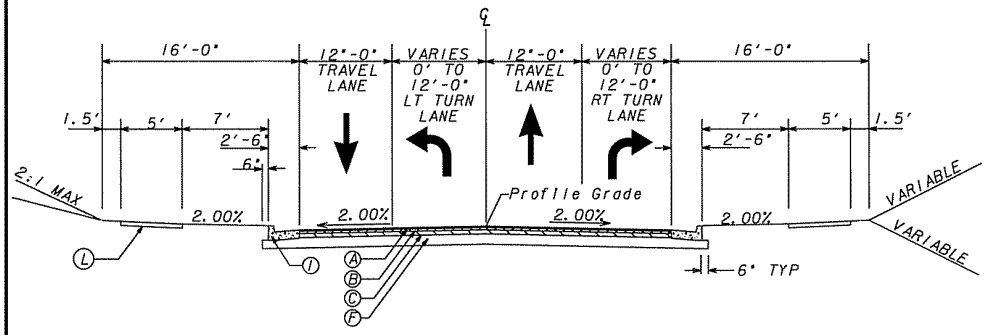

TYPICAL SECTION NO. 13
TANGENT SECTION
APPLIES: ROSEDALE LANE STA. 10+00 TO STA. 17+90

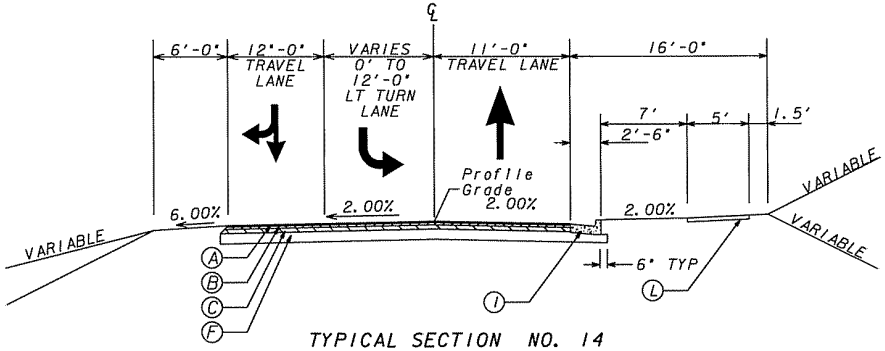

TYPICAL SECTION NO. 14
TANGENT SECTION
APPLIES: ROSEDALE LANE STA. 20+15 TO STA. 24+92

△ SLOPE 3/4" / 1'-0" OR RATE OF S.E. WHICHEVER IS GREATER

□ SLOPE AS FOLLOWS:
S.E. RATE OF 0.03'/FT OR LESS USE 1/2" IN 1'-0"
S.E. RATE OF 0.04'/FT, USE 3/8" IN 1'-0"
S.E. RATE OF 0.05'/FT, USE 1/4" IN 1'-0"
S.E. RATE OF 0.06'/FT, USE 1/8" IN 1'-0"
S.E. RATE OF 0.08'/FT, USE +0.01'/FT

ALGEBRAIC DIFFERENCE IN PAVING AND SHOULDER SLOPES NOT TO EXCEED 0.08'/FT

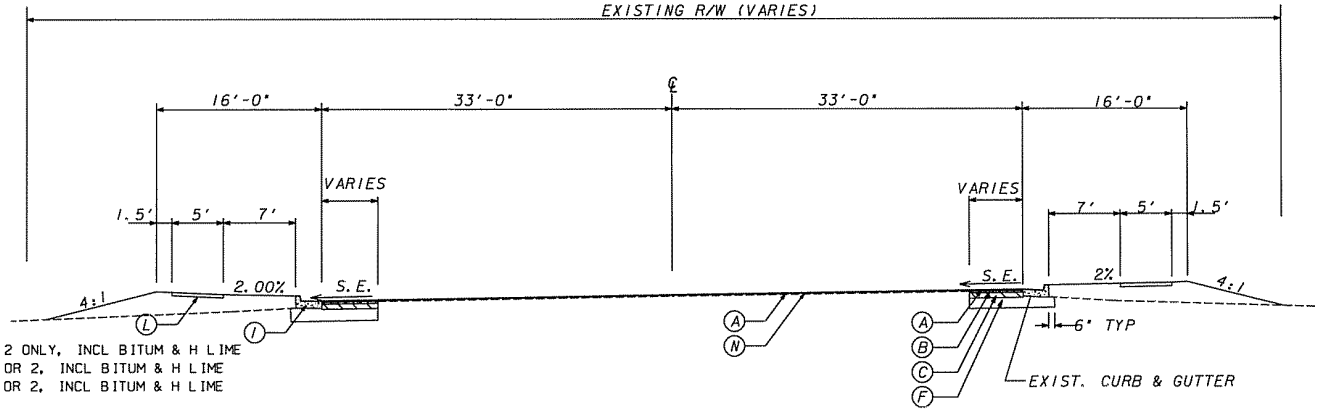

TYPICAL SECTION NO. 15
SUPERELEVATION SECTION
APPLIES: POPLAR SPRINGS RD STA. 148+36.04 TO STA. 151+55

REQUIRED PAVEMENT
- (A) 165 LBS/SY RECYCLED ASPH CONC 12.5 MM SUPERPAVE, GP 2 ONLY, INCL BITUM & H LIME
- (B) 220 LBS/SY RECYCLED ASPH CONC 19 MM SUPERPAVE, GP 1 OR 2, INCL BITUM & H LIME
- (C) 440 LBS/SY RECYCLED ASPH CONC 25 MM SUPERPAVE, GP 1 OR 2, INCL BITUM & H LIME
- (D) GRADED AGGREGATE BASE, 6"
- (E) GRADED AGGREGATE BASE, 10"
- (F) GRADED AGGREGATE BASE, 12"
- (G) GRADED AGGREGATE BASE, 14"
- (H) 8"X30" CONC. CURB & GUTTER, GA. STD. 9032 B. TYPE 7
- (I) 8"X30" CONC. CURB & GUTTER, GA. STD. 9032 B. TYPE 2
- (J) 7 1/2" CONCRETE MEDIAN, WITH TYPE 7 CURB FACE
- (K) MILL ASPH CONC PVMT, 1 1/2 IN DEPTH
- (L) 4" CONCRETE SIDEWALK
- (M) 6" CONCRETE SIDEWALK
- (N) RECYCLED ASPH CONC LEVELING, INCL BITUM MATL & H LIME

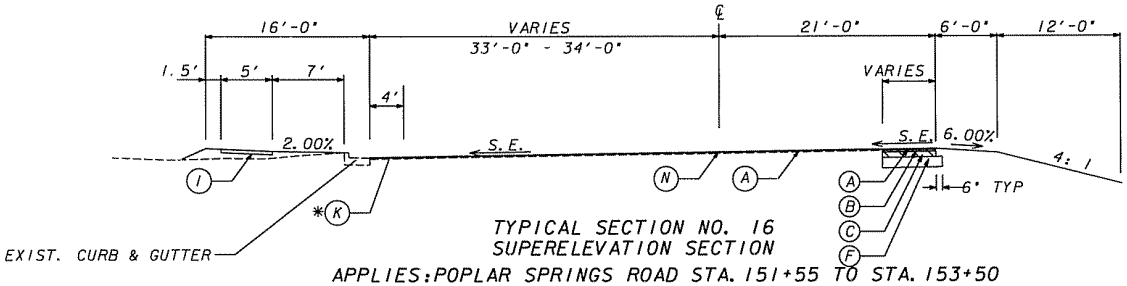

TYPICAL SECTION NO. 16
SUPERELEVATION SECTION

APPLIES: POPLAR SPRINGS ROAD STA. 151+55 TO STA. 153+50

* ONLY MILL ASPH CONC PVMT, (1½" DEPTH) ALONG CURB LINE (4'-0" STRIP)

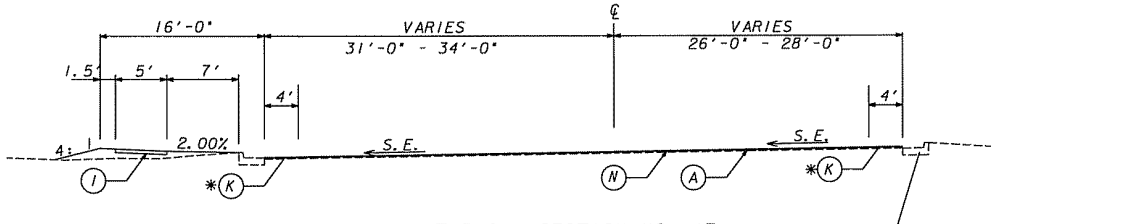

TYPICAL SECTION NO. 17
SUPERELEVATION SECTION

APPLIES: POPLAR SPRINGS ROAD STA. 153+50 TO STA. 155+73

* ONLY MILL ASPH CONC PVMT, (1½" DEPTH) ALONG CURB LINE (4'-0" STRIP)

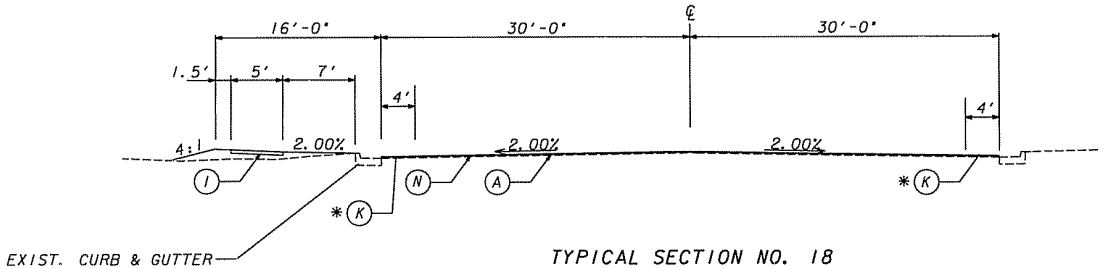

TYPICAL SECTION NO. 18
TANGENT SECTION

APPLIES: POPLAR SPRINGS ROAD STA. 155+73 TO STA. 156+42

* ONLY MILL ASPH CONC PVMT, (1½" DEPTH) ALONG CURB LINE (4'-0" STRIP)

REQUIRED PAVEMENT

- (A) 165 LBS/SY RECYCLED ASPH CONC 12.5 MM SUPERPAVE, GP 2 ONLY, INCL BITUM & H LIME
- (B) 220 LBS/SY RECYCLED ASPH CONC 19 MM SUPERPAVE, GP 1 OR 2, INCL BITUM & H LIME
- (C) 440 LBS/SY RECYCLED ASPH CONC 25 MM SUPERPAVE, GP 1 OR 2, INCL BITUM & H LIME
- (D) GRADED AGGREGATE BASE, 6"
- (E) GRADED AGGREGATE BASE, 10"
- (F) GRADED AGGREGATE BASE, 12"
- (G) GRADED AGGREGATE BASE, 14"
- (H) 8"X30" CONC. CURB & GUTTER, GA. STD. 9032 B. TYPE 7
- (I) 8"X30" CONC. CURB & GUTTER, GA. STD. 9032 B. TYPE 2
- (J) 7½" CONCRETE MEDIAN, WITH TYPE 7 CURB FACE
- (K) MILL ASPH CONC PVMT, 1½ IN DEPTH
- (L) 4" CONCRETE SIDEWALK
- (M) 6" CONCRETE SIDEWALK
- (N) RECYCLED ASPH CONC LEVELING, INCL BITUM MATL & H LIME

Hatch Mott MacDonald
2550 Heritage Ct. SE, Suite 250 Atlanta, GA 30339

NTS

REVISION DATES

STATE OF GEORGIA
DEPARTMENT OF TRANSPORTATION
OFFICE: CONSULTANT DESIGN

TYPICAL SECTIONS

EAST HIRAM PARKWAY

DRAWING No. 5-07

DATE:TIME$$$	TIME$$$	$$PENTABLE$$	DGN	STATE	PROJECT NUMBER	SHEET NO.	TOTAL SHEETS
$USER$				GA	MSL-0004-00(688)	14	41

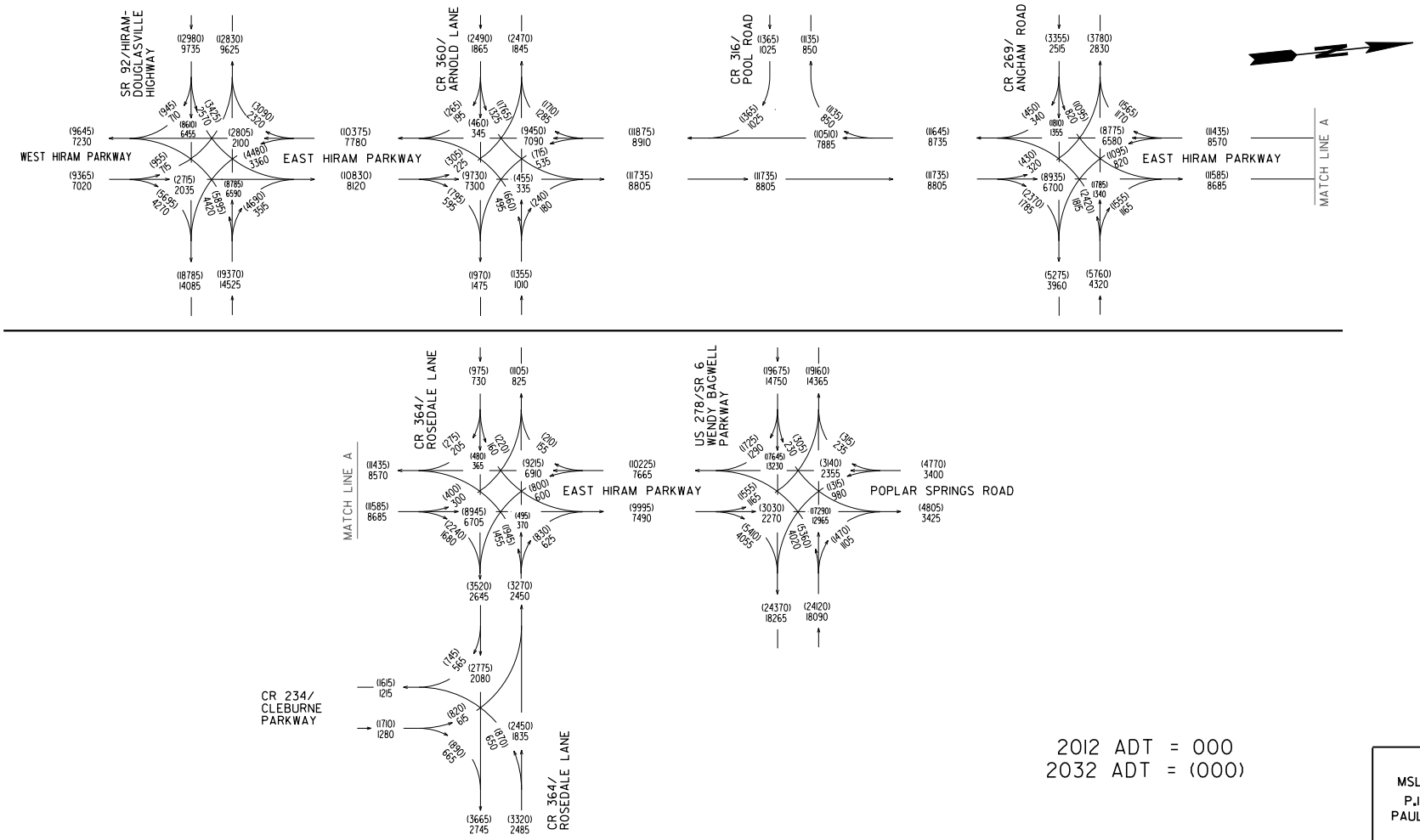

2012 ADT = 000
2032 ADT = (000)

MSL-0004-00(688)
P.I.# 0004688
PAULDING COUNTY

24 HR T = 10%
S.U. = 6%
COMB. = 4%

JACOBS
1718 Peachtree Street NW, Suite 400
Atlanta, GA 30309
(404) 249-7550
Fax (404) 249-7705

REVISION DATES

STATE OF GEORGIA
DEPARTMENT OF TRANSPORTATION
OFFICE: CONSULTANT DESIGN

TRAFFIC DIAGRAM

EAST HIRAM PARKWAY

DRAWING No. 10-01

GPUK

004688trafficvolumes.dgn 6/4/2010 2:44:59 PM

DATETIME$$$	TIME$$$	$$PENTABLE$$	DGN	STATE	PROJECT NUMBER	SHEET NO.	TOTAL SHEETS
$USER$				GA	MSL-0004-00(688)	14	41

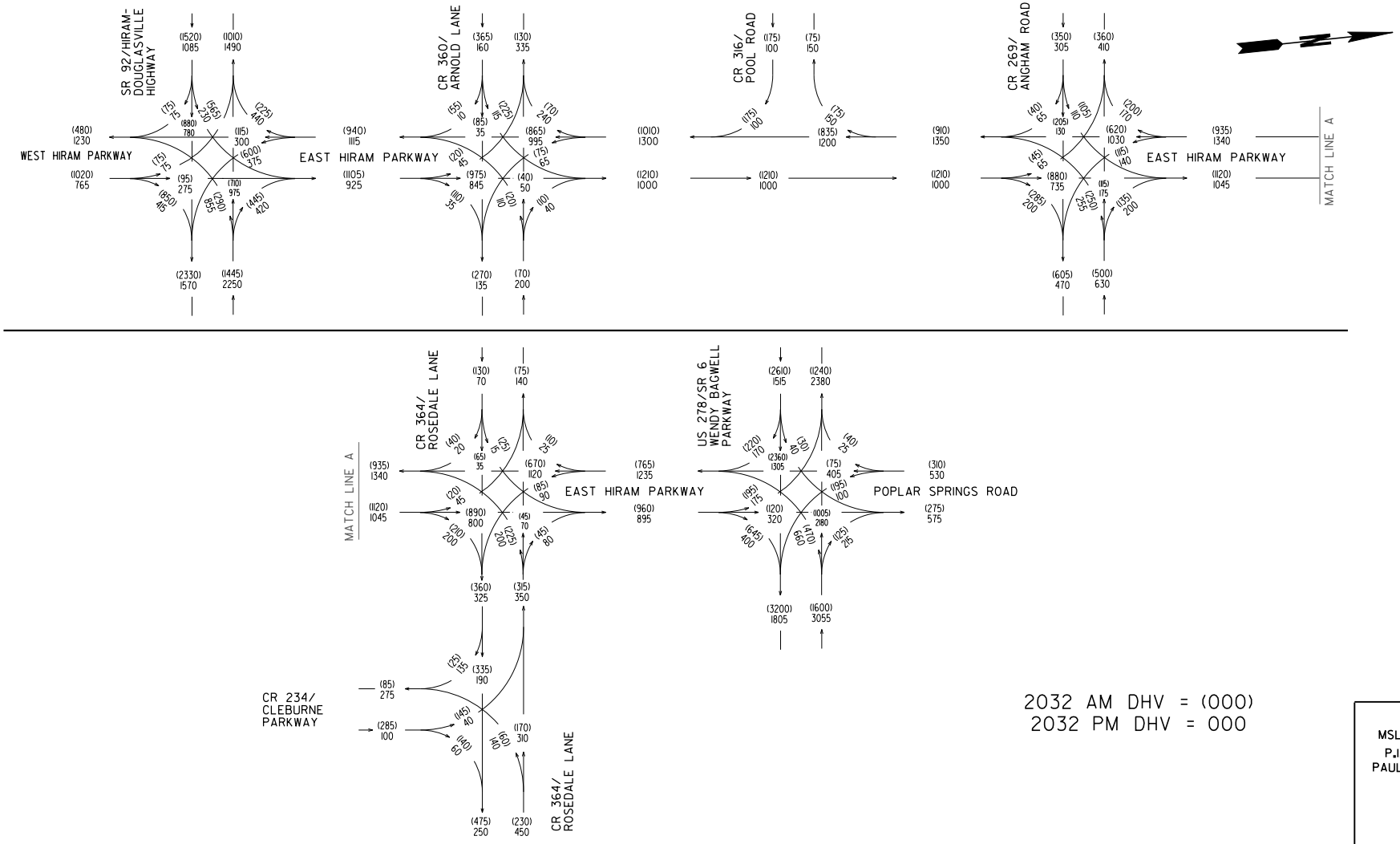

2032 AM DHV = (000)
2032 PM DHV = 000

MSL-0004-00(688)
P.I.# 0004688
PAULDING COUNTY

T = 12%

JACOBS
1718 Peachtree Street NW, Suite 400
Atlanta, GA 30309
(404) 249-7550
Fax (404) 249-7705

REVISION DATES

STATE OF GEORGIA
DEPARTMENT OF TRANSPORTATION
OFFICE: CONSULTANT DESIGN

TRAFFIC DIAGRAM

EAST HIRAM PARKWAY

DRAWING No. 10-02

GPLN

004688trafficvolumes.dgn 6/4/2010 2:46:24 PM

JE JACOBS

LEVEL 1
CHECKPRINT SIGN-OFF SHEET

Client Name: Paulding County

Job Title: East Hiram PKWY

Job Number: PI 0004688 MSL-0004-00(688)

Charge Number:

Document Title:

Document Number:

Check Level (Mark one):

- [✓] 1A 100% Document Check
- [ ] 1B 100% Input Check *(When Pre-Validated Software is Used)*
- [ ] 1C Spot Check
  (See JSQP for specific items to Spot Check. Enter description below):

	Print Name	Signature	Date
[✓] Originator	Michael Francis	Michael Francis	6/29/10
[✓] Checker	Derrick D Vincent	DDV	6/29/10
[ ] Backchecker	"	"	"
[ ] Updater	Michael Francis	Michael Francis	6/29/10
[ ] Rechecker			
[ ] Designer (If required by JSQP)			
[ ] Reviewer (If required by JSQP)			
[ ] Other (If required by JSQP)			
[ ] Verification (If required by JSQP)			

Insert a check ✓ or a "Y" in the box to indicate a required QC activity.
Insert an "X" or an "N" to indicate that the QC activity is not required.