ORIGINAL TO GENERAL FILES

DEPARTMENT OF TRANSPORTATION
STATE OF GEORGIA

INTERDEPARTMENT CORRESPONDENCE

FILE P. I. No. 0001769, Dawson County
STP00-0001-00(769)
SR 53@ Thompson Road/Etowah River Road -
Intersection Improvements

OFFICE Preconstruction

DATE July 7, 2008

FROM for Genetha Rice-Singleton, Assistant Director of Preconstruction

TO SEE DISTRIBUTION

SUBJECT APPROVED PROJECT CONCEPT REPORT

Attached for your files is the approval for subject project.

Attachment

DISTRIBUTION:

Brian Summers
Glenn Bowman
Ken Thompson
Michael Henry
Keith Golden
Angela Alexander
Paul Liles
Russell McMurry
Robert Mahoney
Shane Dover
BOARD MEMBER

DEPARTMENT OF TRANSPORTATION
STATE OF GEORGIA

INTERDEPARTMENTAL CORRESPONDENCE

FILE: P.I. No. 0001769, Dawson County
STP00-0001-00(769)
SR 53 @ Thompson Road/Etowah River Road-
Intersection Improvements

OFFICE: Preconstruction

DATE: June 25, 2008

FROM: Genetha Rice-Singleton, Assistant Director of Preconstruction

TO: Gerald M. Ross, P.E., Chief Engineer

SUBJECT: ***PROJECT CONCEPT REPORT***

This project is the SR 53 @ Thompson Road/Etowah River Road intersection improvements in, Dawson County, Georgia. Currently, the intersection is a two-way stop with signs on Thompson Road and Etowah River Road. The speed limit on SR 53 is 55 MPH, the speed limit on Thompson Road is 45 MPH and the speed limit on Etowah River Road is 35 MPH. Substandard vertical geometry and inadequate sight distance exists along SR 53 according to AASHTO design standards. The purpose of this project is to reduce delays, increase safety, improve sight distance, and improve the function of the intersection to more effectively manage traffic demands. The 2007 Average Daily Traffic (ADT) of 12,900 vehicles per day (VPD) on SR 53 within the project area is projected to increase to 17,000 by the build year 2010. This volume is projected to increase to 27,400 VPD by the design year 2030.

The proposed project will include the addition of right and left turn lanes on SR 53 as well as the addition of left turn lanes on Thompson and Etowah River Road. The substandard profile on SR 53 will be modified to meet current design standards and improve sight distance. Traffic will be maintained during construction.

Environmental concerns include requiring a Categorical Exclusion will be prepared; a Public hearing is not required; Time saving procedures is appropriate.

The estimated costs for this project are:

	PROPOSED	APPROVED	FUNDING	PROG DATE
Construction (includes E&C)	$ 1,824,000	$ 2,087,000	L240	2010 (proposed)
Right-of-way	$ 1,012,000	$ 280,000	L240	2009 (proposed)
Utilities	--0--			

* Rescission letter sent to Dawson 9-30-05.

I recommend this project concept be approved.

GRS: JDQ

Attachment

CONCUR_____
Todd I. Long, P.E., Director of Preconstruction

APPROVED_____
Gerald M. Ross, P.E., Chief Engineer

RECEIVED
JUN 5 2008
PRECONSTRUCTION

DEPARTMENT OF TRANSPORTATION
STATE OF GEORGIA

PROJECT CONCEPT REPORT

Project Number: STP00-0001-00(769)
County: Dawson
P.I. Number: 0001769

Federal Route Number: N/A
State Route Number: 53

SR 53 at Thompson Road/Etowah River Road Intersection Improvements

Recommendation for approval:

5/12/08
DATE

Project Manager

5/13/08
DATE

District 1 Engineer

The concept as presented herein and submitted for approval is consistent with that which is included in the Regional Transportation Program (RTP) and/or the State Transportation Improvement Program (STIP).

DATE

State Transportation Planning Administrator

DATE

State Transportation Financial Management Administrator

DATE

State Environmental / Location Engineer

5-29-08
DATE

State Traffic Safety and Design Engineer

DATE

Project Review Engineer

DEPARTMENT OF TRANSPORTATION
STATE OF GEORGIA

RECEIVED
JUN 9 2008
PRECONSTRUCTION

INTERDEPARTMENT CORRESPONDENCE

FILE: **P.I. Nos. 0001769** **OFFICE:** Environment/Location

PROJECT No. STP00-0001-00(769) / DAWSON County **DATE:** 6/5/08
SR @ Thompson Road/Etowah River Road Intersection Improvement

FROM: Glenn Bowman, P.E., State Environmental/Location Engineer

TO: Genetha Rice-Singleton, Assistant Director of Preconstruction

SUBJECT: **PROJECT CONCEPT REPORT**

The Concept Report for the above project has been reviewed and appears satisfactory subject to the following comments:

1. There is a need to establish boundaries early for the historic residence. Since potential exists for the cemetery to also be historic; we need boundaries early for development of the Environmental document. There is potential for Section 4(f) that could severely impact the project schedule.

2. If an off-site detour is needed, the associated detour PIOH would be needed prior to submittal of the CE to FHWA.

If you have any questions, please contact Glenn Bowman at (404) 699-4401.

GB/lc

Attachment

cc: Brian Summers
Keith Golden
Jamie Simpson
Angela Alexander
Russell McMurry

DEPARTMENT OF TRANSPORTATION
STATE OF GEORGIA

PROJECT CONCEPT REPORT

Project Number: STP00-0001-00(769)
County: Dawson
P.I. Number: 0001769

Federal Route Number: N/A
State Route Number: 53

SR 53 at Thompson Road/Etowah River Road Intersection Improvements

Recommendation for approval:

5/12/08
DATE

Project Manager

5/13/08
DATE

Russell R. McMurry
District 1 Engineer

The concept as presented herein and submitted for approval is consistent with that which is included in the Regional Transportation Program (RTP) and/or the State Transportation Improvement Program (STIP).

DATE

State Transportation Planning Administrator

DATE

State Transportation Financial Management Administrator

6/6/08
DATE

State Environmental / Location Engineer

DATE

State Traffic Safety and Design Engineer

DATE

Project Review Engineer

DEPARTMENT OF TRANSPORTATION
STATE OF GEORGIA

PROJECT CONCEPT REPORT

Project Number: STP00-0001-00(769)
County: Dawson
P.I. Number: 0001769

Federal Route Number: N/A
State Route Number: 53

SR 53 at Thompson Road/Etowah River Road Intersection Improvements

Recommendation for approval:

5/12/08
DATE

Project Manager

5/13/08
DATE

District 1 Engineer

The concept as presented herein and submitted for approval is consistent with that which is included in the Regional Transportation Program (RTP) and/or the State Transportation Improvement Program (STIP).

5/20/2008
DATE

State Transportation Planning Administrator

DATE

State Transportation Financial Management Administrator

DATE

State Environmental / Location Engineer

DATE

State Traffic Safety and Design Engineer

DATE

Project Review Engineer

NOTICE OF LOCATION AND DESIGN APPROVAL

PROJECT STP00-0001-00(769) Dawson County
P.I. NO. 0001769

Notice is hereby given in compliance with Georgia Code 22-2-109 that the Georgia Department of Transportation has approved the Location and Design of this project.

The date of location approval is July 7, 2008.

The proposed project is located 3 miles northwest of GA 400 in Dawson County in land lots 113, 114, 127, and 128. The project is located at MP 12.89 along SR 53. The termini of the intersection improvement project were established based on the most appropriate tie-ins of the proposed roadway. The proposed project length is approximately 0.5 miles.

The project proposes to make improvements that would include the addition of right and left turn lanes on all quadrants of the intersection, modifying the profile in order to improve sight distance, and adding a signal to the intersection. The project would improve safety and efficiency of the intersection at SR 53 at Etowah River Road/Thompson Road.

Drawings or maps or plats of the proposed project, as approved, are on file and are available for public inspection at the Georgia Department of Transportation:

Hiral Patel, District 1, Area 1 Engineer
hpatel@dot.ga.gov
2594 Gillsville Highway
Gainesville, GA 30507
(770) 535-5759

Any interested party may obtain a copy of the drawings or maps or plats or portions thereof by paying a nominal fee and requesting in writing to:

Hiral Patel, District 1, Area 1 Engineer
hpatel@dot.ga.gov
2594 Gillsville Highway
Gainesville, GA 30507
(770) 535-5759

Any written request or communication in reference to this project SHOULD include the Project and P.I. Numbers as noted at the top of this notice.

Estimate Report for file "SR 53 Signal"

Section ROADWAY

Item Number	Quantity	Units	Unit Price	Item Description	Cost
150-1000	1	LS	75000.00	TRAFFIC CONTROL -	75000.00
201-1500	1	LS	50000.00	CLEARING & GRUBBING -	50000.00
210-0100	1	LS	15000.00	GRADING COMPLETE -	15000.00
310-5120	14600	SY	20.98	GR AGGR BASE CRS, 12 INCH, INCL MATL	306308.00
402-3121	3200	TN	63.93	RECYCLED ASPH CONC 25 MM SUPERPAVE, GP 1 OR 2, INCL BITUM MATL & H LIME	204576.00
402-3130	1200	TN	65.38	RECYCLED ASPH CONC 12.5 MM SUPERPAVE, GP 2 ONLY, INCL BITUM MATL & H LIME	78456.00
402-3190	1600	TN	63.78	RECYCLED ASPH CONC 19 MM SUPERPAVE, GP 1 OR 2,INCL BITUM MATL & H LIME	102048.00
413-1000	300	GL	1.93	BITUM TACK COAT	579.00
500-3201	100	CY	547.82	CLASS B CONCRETE, RETAINING WALL	54782.00
647-1000	1	LS	120000.00	TRAFFIC SIGNAL INSTALLATION NO - 1	120000.00
				Section Sub Total:	**$1,006,749.00**

Section Signing and Marking

Item Number	Quantity	Units	Unit Price	Item Description	Cost
653-0110	34	EA	58.96	THERMOPLASTIC PVMT MARKING, ARROW, TP 1	2004.64
653-0120	30	EA	72.52	THERMOPLASTIC PVMT MARKING, ARROW, TP 2	2175.60
653-1501	9000	LF	0.64	THERMOPLASTIC SOLID TRAF STRIPE, 5 IN, WHITE	5760.00
653-1502	8600	LF	0.61	THERMOPLASTIC SOLID TRAF STRIPE, 5 IN, YELLOW	5246.00
653-1704	80	LF	4.12	THERMOPLASTIC SOLID TRAF STRIPE, 24 IN, WHITE	329.60
653-3501	1050	GLF	0.56	THERMOPLASTIC SKIP TRAF STRIPE, 5 IN, WHITE	588.00
653-6004	154	SY	2.83	THERMOPLASTIC TRAF STRIPING, WHITE	435.82
653-6006	310	SY	2.97	THERMOPLASTIC TRAF STRIPING, YELLOW	920.70
654-1001	85	EA	3.10	RAISED PVMT MARKERS TP 1	263.50
654-1003	115	EA	3.76	RAISED PVMT MARKERS TP 3	432.40
				Section Sub Total:	**$18,156.26**

Section Erosion Control

Item Number	Quantity	Units	Unit Price	Item Description	Cost
163-0232	5	AC	707.73	TEMPORARY GRASSING	3538.65
163-0240	50	TN	176.49	MULCH	8824.50
163-0300	8	EA	1700.55	CONSTRUCTION EXIT	13604.40
163-0503	10	EA	542.06	CONSTRUCT AND REMOVE SILT CONTROL GATE, TP 3	5420.60
165-0010	2000	LF	0.81	MAINTENANCE OF TEMPORARY SILT FENCE, TP A	1620.00
165-0020	1000	LF	1.43	MAINTENANCE OF TEMPORARY SILT FENCE, TP B	1430.00
165-0030	4000	LF	1.61	MAINTENANCE OF TEMPORARY SILT FENCE, TP C	6440.00
165-0087	8	EA	166.07	MAINTENANCE OF SILT CONTROL GATE, TP 3	1328.56
165-0101	8	EA	571.19	MAINTENANCE OF CONSTRUCTION EXIT	4569.52
167-1000	1	EA	1175.47	WATER QUALITY MONITORING AND SAMPLING	1175.47
167-1500	18	MO	1027.27	WATER QUALITY INSPECTIONS	18490.86
171-0010	2000	LF	1.77	TEMPORARY SILT FENCE, TYPE A	3540.00
171-0020	1000	LF	2.84	TEMPORARY SILT FENCE, TYPE B	2840.00
171-0030	4000	LF	4.06	TEMPORARY SILT FENCE, TYPE C	16240.00
603-2018	30	SY	58.84	STN DUMPED RIP RAP, TP 1, 18 IN	1765.20
700-6910	5	AC	1066.58	PERMANENT GRASSING	5332.90
700-7000	5	TN	60.18	AGRICULTURAL LIME	300.90
700-8000	2	TN	295.93	FERTILIZER MIXED GRADE	591.86
716-2000	600	SY	1.20	EROSION CONTROL MATS, SLOPES	720.00
				Section Sub Total:	**$97,773.42**

Section Right of Way					
Item Number	Quantity	Units	Unit Price	Item Description	Cost
				Section Sub Total:	$0.00

Section Drainage					
Item Number	Quantity	Units	Unit Price	Item Description	Cost
550-1180	500	LF	44.93	STORM DRAIN PIPE, 18 IN, H 1-10	22465.00
550-1240	200	LF	50.86	STORM DRAIN PIPE, 24 IN, H 1-10	10172.00
550-3318	10	EA	586.23	SAFETY END SECTION 18 IN, STORM DRAIN, 4:1 SLOPE	5862.30
550-3324	4	EA	954.09	SAFETY END SECTION 24 IN, STORM DRAIN, 4:1 SLOPE	3816.36
550-4218	4	EA	661.52	FLARED END SECTION 18 IN, STORM DRAIN	2646.08
550-4224	2	EA	780.97	FLARED END SECTION 24 IN, STORM DRAIN	1561.94
				Section Sub Total:	$46,523.68

Section Utility					
Item Number	Quantity	Units	Unit Price	Item Description	Cost
				Section Sub Total:	$0.00

Total Estimated Cost: $1,169,202.36

Subtotal Construction Cost	**$1,169,202.36**
E&C Rate 10.0 %	$116,920.24
Inflation Rate 5.0 % @ 2.0 Years	$131,827.57
Total Construction Cost	**$1,417,950.16**
Right Of Way	$0.00
ReImb. Utilities	$0.00
Grand Total Project Cost	**$1,417,950.16**

ENGINEERING @ 5% - 80,460
CONTINGENCY @ 8% - 135,173
TOTAL CONST COST - $1,824,835
RIGHT-OF-WAY 1,012,200
REIMB UTILITIES -0-
TOTAL PROJECT COST. $ 2,837,035

DEPARTMENT OF TRANSPORTATION
STATE OF GEORGIA

PROJECT CONCEPT REPORT

Project Number: STP00-0001-00(769)
County: Dawson
P.I. Number: 0001769

Federal Route Number: N/A
State Route Number: 53

SR 53 at Thompson Road/Etowah River Road Intersection Improvements

Recommendation for approval:

5/12/08
DATE

Project Manager

5/13/08
DATE

Russell R. McMurry
District 1 Engineer

The concept as presented herein and submitted for approval is consistent with that which is included in the Regional Transportation Program (RTP) and/or the State Transportation Improvement Program (STIP).

DATE — State Transportation Planning Administrator

DATE — State Transportation Financial Management Administrator

DATE — State Environmental / Location Engineer

DATE — State Traffic Safety and Design Engineer

DATE — Project Review Engineer

Palmer Cem
Dougherty
Etowah River Road
End Project
Martin Cem
1153
1100
Thompson Road
State Route 53
Begin Project
1266
Legend
Proposed Project Alignment
Prepared For
PROJECT LOCATION MAP
INTERSECTION IMPROVEMENTS AT SR 53 AND ETOWAH RIVER ROAD
GDOT Project Number STP00-0001-00(769), P.I. No. 0001769
Dawson County, Georgia
0 262.5 525 1,050 1,575 2,100
Feet
N
Figure 1

NEED AND PURPOSE

Project Description

The Georgia Department of Transportation (GDOT) proposes to improve the SR 53 intersection with Thompson Road/Etowah River Road. The proposed project would improve safety and efficiency of the intersection. Improvements would include the addition of right and left turn lanes on SR 53 and left turn lanes on Thompson Road and Etowah River Road, and modifying the profile to improve sight distance. GDOT references it as **Project STP00-0001-00(769), P.I. 0001769.**

Independent Utility and Logical Termini

The project termini, or project limits along SR 53 and Thompson Road/Etowah River Road, include sufficient lengths to add turn lanes, improve sight distance, and merge the proposed improvements back into the existing roadway sections. This project is considered independent since the improvements would be limited to the intersection area and would not preclude, require, and depend on the implementation of any other transportation projects.

Need and Purpose

The need and purpose of the proposed project is to reduce time delays, increase safety, improve sight distance, and improve the function of the intersection to more effectively manage traffic demands.

The intersection is currently a two-way stop with stop signs on Thompson Road and Etowah River Road. Each leg is two lanes wide (one in each direction) without turn lanes. The speed limit on SR 53 is 55 mph, the speed limit on Thompson Road is 45 mph, and the speed limit on Etowah River Road is 35 mph. According to AASHTO's design standards, substandard vertical geometry and inadequate sight distance exists along SR 53 to accommodate the 55 mph desired speed limit.

While the number of accidents occurring at the intersection is low, particular types of accidents occur more frequently than others along this corridor and underscore the existing deficiencies. For instance, rear end and side swipe accidents occurred in 100 percent of cases during the years 2005 and 2006. Collisions with objects other than motor vehicles accounted for 40 percent of accidents while rear end collisions occurred in 60 percent of accidents during 2004. Rear end collisions often point to a need for turn lanes where vehicles would be allowed to slow down and stop without conflicting through traffic. Further, improved sight distance would aid in providing motorists with appropriate reaction time to identify a problem and allow for appropriate corrective maneuvers.

Over 12,900 vehicles per day are currently utilizing this intersection, and the existing intersection operates at a LOS C during the morning and evening peak hours. Over 17,000 vehicles a day are projected to use this intersection with or without improvements in the build year (2010). With the projected increase in traffic, the intersection would be expected to operate at LOS C during morning and evening peak hours under the No Build condition. Over 27,000 vehicles a day are projected to use this intersection with or without improvements in the design year (2030), which would be expected to operate at LOS F during both the AM and PM peak hours under the No Build condition. With the proposed improvements, the left turn movements from SR 53 operate at a LOS B and all side road movements operate at a LOS F in the design year (2030).

DESCRIPTION OF THE PROPOSED PROJECT

The proposed project is located 3 miles northwest of GA 400 in Dawson County and is located at MP 12.89 along SR 53. Improvements would include the addition of right and left turn lanes on SR 53 as well as the addition of left turn lanes on Thompson Road and Etowah River Road. In addition the substandard profile of SR 53, the sag curve at the intersection and the crest curve just east of the intersection, would be modified to meet current design standards and improve sight distance. The proposed project length is approximately 0.5 miles.

Is the project located in a Non-attainment area? __Yes _X No

PDP Classification: Major _____ Minor __X___

Federal Oversight: Full Oversight ( ), Exempt (X), State Funded ( ), or Other ( )

Functional Classification: Rural Principal Arterial (S.R. 53)
Rural Minor Collector (Etowah River Road and Thompson Road)

U.S. Route Number(s): N/A **State Route Number(s):** 53

Traffic (AADT) SR 53:

Current Year: (2007) 12,900 Design Year: (2030) 27,400

Existing design features:

- Typical Section: Rural two-lane roadway with 12' lanes
- Posted Speed: 55 mph (SR 53); 35 mph (Etowah River Road); 45 mph (Thompson Road)
- Maximum super-elevation rate for curve:
- Maximum grade: Mainline 4.5% Cross roads 9.0% (Thompson Road)
- Width of right of way: 60'
- Major structures: None
- Major interchanges or intersections along the project: Intersection Project
- Existing length of roadway segment: 0.5 Miles

Proposed Design Features:

- Proposed typical section(s): Rural two-lane roadway with turn lanes (see typical section)

- Proposed Design Speed:
  - Mainline SR 53: 55 mph
  - Thompson Road: 35 mph
  - Etowah River Road: 35 mph
- Proposed Maximum grade Mainline: 4.9% Maximum allowable grade: 6.0%
- Proposed Maximum grade Side Streets: 12% Maximum allowable grade: 12%
- Proposed Maximum grade residential driveway: 27%
- Proposed Maximum grade commercial driveway: 11%
- Proposed Minimum radius of curve (mainline): 1700 ft Minimum radius allowable: 1060 ft
- Proposed Minimum radius of curve (side roads): 3000 ft Minimum radius allowable: 340 ft
- Right of Way
  - Width: 74 ft. – 145 ft.
  - Easements: Temporary (X), Permanent(X), Utility( ), Other( ).
  - Type of access control: Full( ), Partial( ), By Permit(X), Other( ).
  - Number of parcels: 20
  - Number of displacements:
    - Business: 0
    - Residences: 0
    - Other: 0
- Structures:
  - Bridges: None
  - Retaining Wall:
    - Possibly a small retaining wall along SR 53 on the north-eastern side and on Etowah River Road to eliminate impact to cemetery parcel.
    - Probably a retaining wall along SR 53 on the south-western side to reduce property impacts.
    - Probably a retaining wall along SR 53 on the north-eastern side to reduce property impacts.
- Major intersections: The subject intersection of SR 53 and Etowah River Rd/Thompson Rd
- Traffic control during construction: Additional temporary pavement will be added to accommodate traffic during the profile adjustment stages of SR 53. Traffic will remain open on SR 53 and Etowah River Road throughout the construction of the project. Thompson Road will be closed possibly for a short time during construction and an offsite detour will be provided utilizing Hugh Stowers Road.

Design Exceptions to controlling criteria anticipated:

	UNDETERMINED	YES	NO
HORIZ ALIGNMENT:	( )	( )	(X)
ROADWAY WIDTH:	( )	( )	(X)
SHOULDER WIDTH:	( )	( )	(X)
VERTICAL GRADES	( )	( )	(X)
CROSS SLOPES:	( )	( )	(X)
STOPPING SIGHT DISTANCE:	( )	( )	(X)
SUPERELEVATION RATES:	( )	( )	(X)
HORIZONTAL CLEARANCE:	( )	( )	(X)
SPEED DESIGN:	( )	(X)	( )
VERTICAL CLEARANCE:	( )	( )	(X)
BRIDGE WIDTH:	( )	( )	(X)
BRIDGE STRUCTURAL CAPACITY:	( )	( )	(X)

- Design Variances: None

- Environmental Concerns:
  - Historic Resources:
    - A cemetery is located in the northeast quadrant of the intersection.
    - Northern project limit at tie-in. Old gas station – most likely has UST.
    - Roe-Rhodes house near intersection is an eligible historic resource.
    - An unmarked cemetery may be located just east of the intersection of SR 53 and Gober Road.
  - No wetlands
  - Streams: One intermittent jurisdictional stream is within the project corridor. It is approximately 475 feet southwest of the intersection crossing Thompson Road. Existing outlet is crushed – existing ditch depth is roughly 10' deep.

- Level of Environmental Analysis:
  - Are Time Saving Procedures Appropriate? Yes (X), No ( )
  - Categorical Exclusion Anticipated? Yes (X), No ( )
  - Environmental Assessment/Finding of No Significant Impact: Yes ( ), No (X)
  - Environmental Impact Statement (EIS): Yes ( ), No (X)

- Utility Involvements:
  - Telephone/Fiber: Windstream Communications
  - Power: Sawnee EMC
  - Gas: AGL Resources
  - Cable TV: Windstream Communications
  - Water: Etowah Water & Sewer Authority

VE Study Required: Yes ( ) No (X)

Project Responsibilities:

- Design: Heath and Lineback/Mulkey Engineers & Consultants
- Right of way acquisition: GDOT
- Relocation of utilities: Utility Companies
- Letting to contract: GDOT
- Supervision of construction: GDOT
- Providing material pits: Contractor
- Providing detours: Contractor

Coordination:

- Initial Concept Meeting date (Minutes Attached): January 30, 2008
- Concept meeting date and brief summary (Minutes Attached)
- P.A.R. meetings, dates, and results: None Needed
- FEMA, USCG and/or TVA: N/A
- Public involvement: Possible Detour Meeting (for short term closure of Thompson Road)
- Local government comments:
- Other Projects in the area: APD00-0056-01(063) SR400 @ SR53/Corr A1 – Long Range
- Other coordination to date: None
- Railroads: None

Scheduling – Responsible Parties' Estimate

Time to complete the environmental process:	9 Months
Time to complete preliminary construction plans:	6 Months
Time to complete right of way plans:	2 Months
Time to complete the section 404 permit:	3 months
Time to complete final construction plans:	6 Months
Time to complete the purchase right-of-way:	12 Months

Other alternates considered:

Alternate 1: Signal Controlled – A traffic signal warrant study did not indicate a need for a traffic signal at the intersection in the opening or design years.

Alternate 2: A roundabout was considered as an option to adding turn lanes and a signal or stop signs. The future volumes would require a double lane roundabout which would require a significant amount of Right of Way at the intersection. The existing topography and specifically the profile of Thompson Road, the south leg of the intersection, drops sharply as you move away from the intersection. A roundabout would require the plane of the intersection to extend south and require an even steeper grade on Thompson Road to tie back into existing. This would also complicate some adjacent driveway tie-ins. The cemetery in the northwest quadrant prevented the roundabout from being located further north away from Thompson Road. The roundabout is not justified because the speed would need to be reduced from an open highway situation to a greatly reduced speed in order to enter the roundabout (25 mph). Due to the previous reason as well as the required area needed and limiting topography, this alternative was eliminated.

Alternate 3: Straightening the alignment along SR53 was considered by flattening the horizontal curve. In order to accomplish the flatter curve, the roadway would impact the Cemetery as well as creating additional impacts to the houses along the northeastern side of the road. Due to the impacts to the Cemetery as well as the additional impacts to the parcels along the northeastern side of the road, this alternative was eliminated.

Comments:

Attachments:

1. Cost Estimates:
    a. Construction including E&C
    b. Right of Way
2. Plan display
3. Typical sections
4. Accident summaries
5. Capacity Analysis
6. Minutes of pre-concept meeting
7. Location and Design Notice
8. Cost/benefit Analysis

Estimate Report for file "SR 53 Signal"

Section ROADWAY

Item Number	Quantity	Units	Unit Price	Item Description	Cost
150-1000	1	LS	75000.00	TRAFFIC CONTROL -	75000.00
201-1500	1	LS	50000.00	CLEARING & GRUBBING -	50000.00
210-0100	1	LS	15000.00	GRADING COMPLETE -	15000.00
310-5120	14600	SY	20.98	GR AGGR BASE CRS, 12 INCH, INCL MATL	306308.00
402-3121	3200	TN	63.93	RECYCLED ASPH CONC 25 MM SUPERPAVE, GP 1 OR 2, INCL BITUM MATL & H LIME	204576.00
402-3130	1200	TN	65.38	RECYCLED ASPH CONC 12.5 MM SUPERPAVE, GP 2 ONLY, INCL BITUM MATL & H LIME	78456.00
402-3190	1600	TN	63.78	RECYCLED ASPH CONC 19 MM SUPERPAVE, GP 1 OR 2,INCL BITUM MATL & H LIME	102048.00
413-1000	300	GL	1.93	BITUM TACK COAT	579.00
500-3201	100	CY	547.82	CLASS B CONCRETE, RETAINING WALL	54782.00
647-1000	1	LS	120000.00	TRAFFIC SIGNAL INSTALLATION NO - 1	120000.00
				Section Sub Total:	**$1,006,749.00**

Section Signing and Marking

Item Number	Quantity	Units	Unit Price	Item Description	Cost
653-0110	34	EA	58.96	THERMOPLASTIC PVMT MARKING, ARROW, TP 1	2004.64
653-0120	30	EA	72.52	THERMOPLASTIC PVMT MARKING, ARROW, TP 2	2175.60
653-1501	9000	LF	0.64	THERMOPLASTIC SOLID TRAF STRIPE, 5 IN, WHITE	5760.00
653-1502	8600	LF	0.61	THERMOPLASTIC SOLID TRAF STRIPE, 5 IN, YELLOW	5246.00
653-1704	80	LF	4.12	THERMOPLASTIC SOLID TRAF STRIPE, 24 IN, WHITE	329.60
653-3501	1050	GLF	0.56	THERMOPLASTIC SKIP TRAF STRIPE, 5 IN, WHITE	588.00
653-6004	154	SY	2.83	THERMOPLASTIC TRAF STRIPING, WHITE	435.82
653-6006	310	SY	2.97	THERMOPLASTIC TRAF STRIPING, YELLOW	920.70
654-1001	85	EA	3.10	RAISED PVMT MARKERS TP 1	263.50
654-1003	115	EA	3.76	RAISED PVMT MARKERS TP 3	432.40
				Section Sub Total:	**$18,156.26**

Section Erosion Control

Item Number	Quantity	Units	Unit Price	Item Description	Cost
163-0232	5	AC	707.73	TEMPORARY GRASSING	3538.65
163-0240	50	TN	176.49	MULCH	8824.50
163-0300	8	EA	1700.55	CONSTRUCTION EXIT	13604.40
163-0503	10	EA	542.06	CONSTRUCT AND REMOVE SILT CONTROL GATE, TP 3	5420.60
165-0010	2000	LF	0.81	MAINTENANCE OF TEMPORARY SILT FENCE, TP A	1620.00
165-0020	1000	LF	1.43	MAINTENANCE OF TEMPORARY SILT FENCE, TP B	1430.00
165-0030	4000	LF	1.61	MAINTENANCE OF TEMPORARY SILT FENCE, TP C	6440.00
165-0087	8	EA	166.07	MAINTENANCE OF SILT CONTROL GATE, TP 3	1328.56
165-0101	8	EA	571.19	MAINTENANCE OF CONSTRUCTION EXIT	4569.52
167-1000	1	EA	1175.47	WATER QUALITY MONITORING AND SAMPLING	1175.47
167-1500	18	MO	1027.27	WATER QUALITY INSPECTIONS	18490.86
171-0010	2000	LF	1.77	TEMPORARY SILT FENCE, TYPE A	3540.00
171-0020	1000	LF	2.84	TEMPORARY SILT FENCE, TYPE B	2840.00
171-0030	4000	LF	4.06	TEMPORARY SILT FENCE, TYPE C	16240.00
603-2018	30	SY	58.84	STN DUMPED RIP RAP, TP 1, 18 IN	1765.20
700-6910	5	AC	1066.58	PERMANENT GRASSING	5332.90
700-7000	5	TN	60.18	AGRICULTURAL LIME	300.90
700-8000	2	TN	295.93	FERTILIZER MIXED GRADE	591.86
716-2000	600	SY	1.20	EROSION CONTROL MATS, SLOPES	720.00
				Section Sub Total:	**$97,773.42**

Section Right of Way					
Item Number	**Quantity**	**Units**	**Unit Price**	**Item Description**	**Cost**
				Section Sub Total:	**$0.00**

Section Drainage					
Item Number	**Quantity**	**Units**	**Unit Price**	**Item Description**	**Cost**
550-1180	500	LF	44.93	STORM DRAIN PIPE, 18 IN, H 1-10	22465.00
550-1240	200	LF	50.86	STORM DRAIN PIPE, 24 IN, H 1-10	10172.00
550-3318	10	EA	586.23	SAFETY END SECTION 18 IN, STORM DRAIN, 4:1 SLOPE	5862.30
550-3324	4	EA	954.09	SAFETY END SECTION 24 IN, STORM DRAIN, 4:1 SLOPE	3816.36
550-4218	4	EA	661.52	FLARED END SECTION 18 IN, STORM DRAIN	2646.08
550-4224	2	EA	780.97	FLARED END SECTION 24 IN, STORM DRAIN	1561.94
				Section Sub Total:	**$46,523.68**

Section Utility					
Item Number	**Quantity**	**Units**	**Unit Price**	**Item Description**	**Cost**
				Section Sub Total:	**$0.00**

Total Estimated Cost: $1,169,202.36

Subtotal Construction Cost	**$1,169,202.36**
E&C Rate 10.0 %	$116,920.24
Inflation Rate 5.0 % @ 2.0 Years	$131,827.57
Total Construction Cost	**$1,417,950.16**
Right Of Way	$0.00
ReImb. Utilities	$0.00
Grand Total Project Cost	**$1,417,950.16**

D.O.T. 66

DEPARTMENT OF TRANSPORTATION
STATE OF GEORGIA

INTERDEPARTMENTAL CORRESPONDENCE

FILE: R/W Cost Estimate **OFFICE: Gainesville R/W**

DATE: 3-14-08

FROM: Brad Whitecotton, District Right of Way Team Manager

TO: Shane Dover

SUBJECT: **RIGHT OF WAY COST ESTIMATE**
PROJECT: STP-0001-00 (769)
COUNTY: Dawson
P.I. NUMBER: 0001769

Attached is the project Right of Way Cost Estimate on the above referenced project. It is estimated that the cost of right of way plus all related expenses will be **$ 1,012,200.00.**

If we can offer further assistance, please contact me @ 770-532-5546 or Kevin D York @ 770-718-5050.

DETAIL COST ESTIMATE SUMMARY SHEET

DATE: 3-14-08 P.I. #: 0001769
PROJECT: STP-0001-00(769) COUNTY: Dawson PARCELS: 19
PROJECT DESCRIPTION: Intersection Improvements of SR 53 @ Thompson Rd/Etowah River Rd

1. LAND: (Total area and cost by category)

Right of Way:	2.25*	$ 238,030.00*	
Permanent and Temporary Easement:	0.00*	$ 0.00*	
Total * Please See the Parcels to be acquired sheet for the breakdown of per Acre price			**$ 238,030.00**

2. IMPROVEMENTS:

Main Structures	$ 75,000.00	
Site Improvements	$ 30,000.00	
Total		**$ 105,000.00**

3. Damages:

Damages to Land and Structures	$ 75,000.00	
Specialty Costs (Cost to Cures, Trade Fixtures, etc.)	$ 25,000.00	
Total		**$ 100,000.00**

4. RELOCATION: (Including Consequential Displacements)

Businesses (# Displaced x $15,000):	$	
Residential Tenant: (# Displaced x $20,000):	$	
Residential Owner (1 Displaced x $40,000):	$ 40,000.00	
Total		**$ 40,000.00**

5. Property Management (Asbestos Removal and Demolition)

Number of Structures 1 x $25,000/structure	$ 25,000.00	
Number of sites with UST's 0 x $50,000	$ -0-	
Number of signs (not billboards) 1 x $1,500	$ -0-	
Total		**$ 25,000.00**

Estimated Cost of Right of Way		**$ 508,030.00**
C/O, Condemnation Increase & Legal Cost (50% of R/W)	$ 254,015.00	
Service Fees and Appraisal Cost (# Par x $7,500)	$ 142,500.00	
Condemnation Cost (# Par x 15% x $7,500)	$ 21,375.00	
Incidentals (# Par x $2,000)	$ 38,000.00	
Net Cost		**$ 963,920.00**
Market Appreciation (5% rural, 10% urban)		$ 48,196.00
TOTAL COST		**$ 1,012,116.00**
TOTAL COST (ROUNDED)		**$ 1,012,200.00**

Credits:	# Hours
Kevin York	30
Melissa Hayes	30

Cc:
Attachment(s): **Project Location Map; Comparable Sales Data**

REVISED: 12-8-06

COST ESTIMATE FOR PARCELS TO BE ACQUIRED

PROJECT NO STP-0001-00(769) COUNTY Dawson

UNIT OR PARCEL	NATURE OF R/W	Amount of R/W (Acre)	Sale #	Price Per Acre	REQ'D R/W	EASEMENT	IMPROVE-MENTS	DAMAGES	FENCE	TOTAL	REMARKS INDICATE POSSIBLE NFS
1	R/W	R/W = 0.11	2	$96,000/ac	$10,560.00		$2,000.00	$20,000.00		$32,560.00	
2	R/W	R/W = 0.11	2	$96,000/ac	$10,560.00		$5,000.00			$15,560.00	
3	R/W	R/W = 0.14	2	$96,000/ac	$13,440.00		$3,000.00			$16,440.00	
4	R/W	R/W = 0.28	2	$96,000/ac	$26,880.00		$4,000.00			$30,880.00	
5	R/W	R/W = 0.09	1 & 3	$110,000/ac	$9,900.00		$2,000.00			$11,900.00	
6	R/W	R/W = 0.18	1 & 3	$115,000/ac	$20,700.00					$20,700.00	
7	R/W	R/W = 0.08	1 & 3	$115,000/ac	$9,200.00			$20,000.00		$29,200.00	CTC parking
8	R/W	R/W = 0.03	1 & 3	$110,000/ac	$3,300.00		$1,000.00			$4,300.00	
9	R/W	R/W = 0.01	2 & 6	$75,000/ac	$750.00					$750.00	
10	R/W	R/W = 0.04	1 & 3	$115,000/ac	$4,600.00					$4,600.00	
11	R/W	R/W = 0.38	1 & 3	$115,000/ac	$43,700.00		$10,000.00	$20,000.00		$73,700.00	
12	R/W	R/W = 0.16	1 & 3	$115,000/ac	$18,400.00			$10,000.00	$2,000.00	$30,400.00	
13	R/W	R/W = 0.01	1 & 3	$110,000/ac	$1,100.00		$3,000.00		$1,000.00	$5,100.00	
15	R/W	R/W = 0.01	1 & 3	$110,000/ac	$1,100.00				$500.00	$1,600.00	
16	R/W	R/W = 0.13	1 & 3	$110,000/ac	$14,300.00			$25,000.00		$39,300.00	
17	R/W	R/W = 0.11	1 & 3	$110,000/ac	$12,100.00			$5,000.00		$17,100.00	
18	R/W	R/W = 0.13	2	$96,000/ac	$12,480.00		$75,000.00			$87,480.00	
19	R/W	R/W = 0.21	2	$96,000/ac	$20,160.00					$20,1600.00	
20	R/W	R/W = 0.05	2	$96,000/ac	$4,800.00					$4,800.00	

COMPARABLE SALES DATA

PROJECT NO. STP-0001-00 (769) **COUNTY** Dawson **Rev 4-11-05**

SALE NO.	DATE	GANTOR	GRANTEE	RECORDED BOOK	RECORDED PAGE	LOCATION	SALES PRICE	SIZE	PER UNIT VALUE	HIGHEST & BEST USE	REMARKS
1	5-15-07	Ardis W. Peters	Five Rivers LLC	810	631	104-158	$345,000	3.83	$90,078	Commercial	
2	2-20-07	Crispina N. Ramirez	William S. Turner	793	116	104-084	$288,000	3.00	$96,000	Residential	On Project
3	9-15-06	Hugh B. Stowers, Jr.	Georgia Trailer & Equipment Inc	763	637	104-062	$245,000	1.79	$136,871	Commercial	
4	8-25-06	North Piedmont Fund LLC	BRB Home Builders Inc	761	16	104-067-008	$120,000	1.25	$96,000	Residential	
5	8-14-06	Poulin Associates Inc	Shaheen Siddiqi	757	337	104-061	$170,000	0.76	$105,264	Commercial	Sale Price included Improvement. Subtracted 90,000 for Improvements.
6	3-30-06	John R. Parker	Perry S. & Holly B. Betterton	730	65	104-043-001	$150,000	2.22	$67,567	Agricultural	
7	11-01-02	Michael Scupin & Bryson Wilkin	Raishali & Kamil Momin	473	72	104-060-001	$275,000	3.22	$85,403	Commercial	
8	1-3-01	Forrest & Alta Davis	Leilani Vining	364	299	104-060	$395,000	3.47	$113,832	Commercial	

Sales Verification and Source:

PREFERRED ALTERNATE

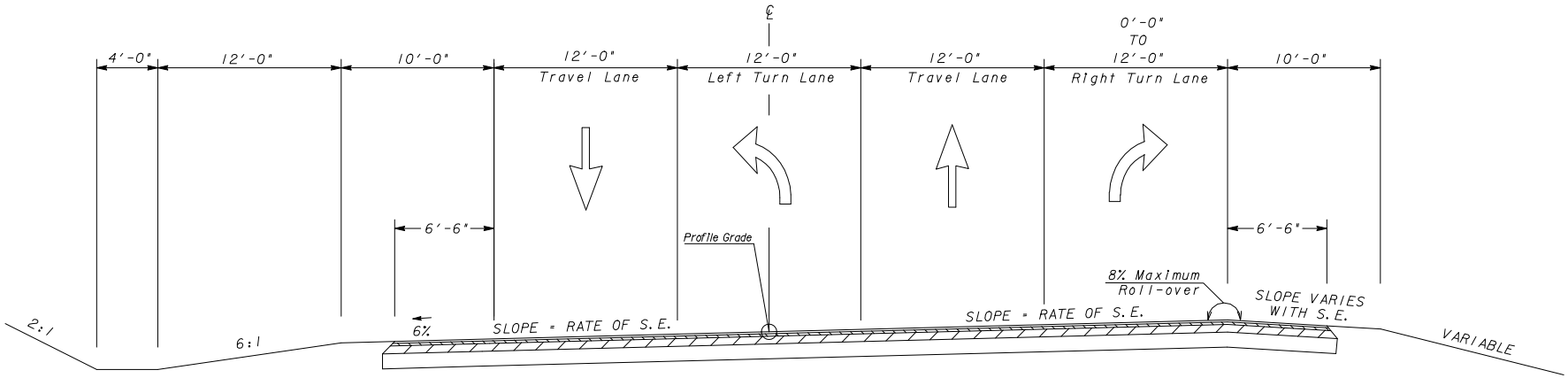

SUPERELEVATED SECTION
SR 53

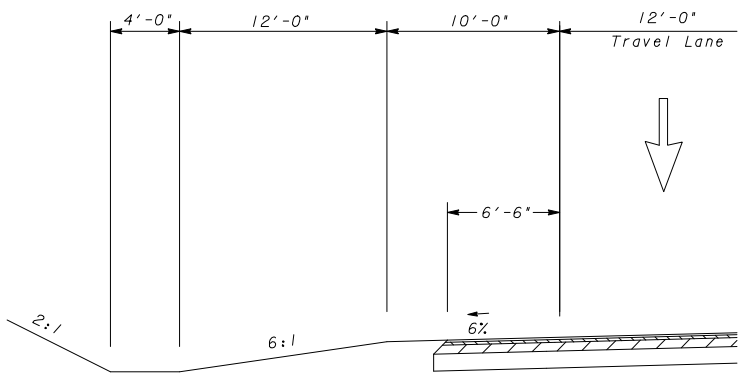

NORMAL SHOULDER CUT
SR 53

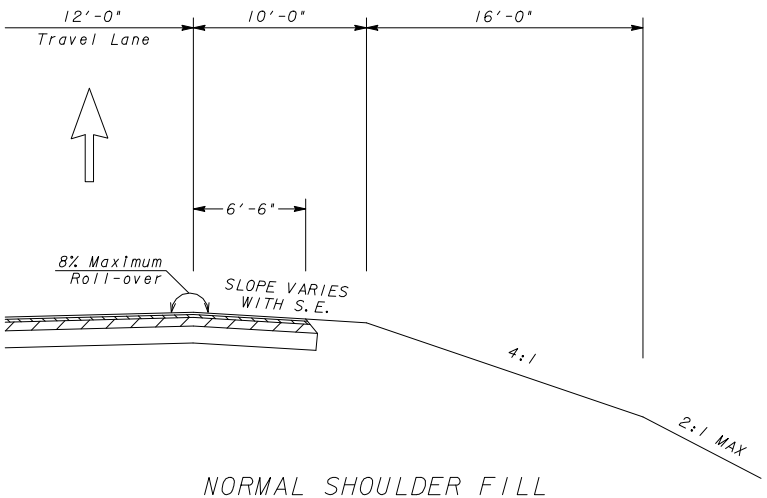

NORMAL SHOULDER FILL
SR 53

PREFERRED ALTERNATE

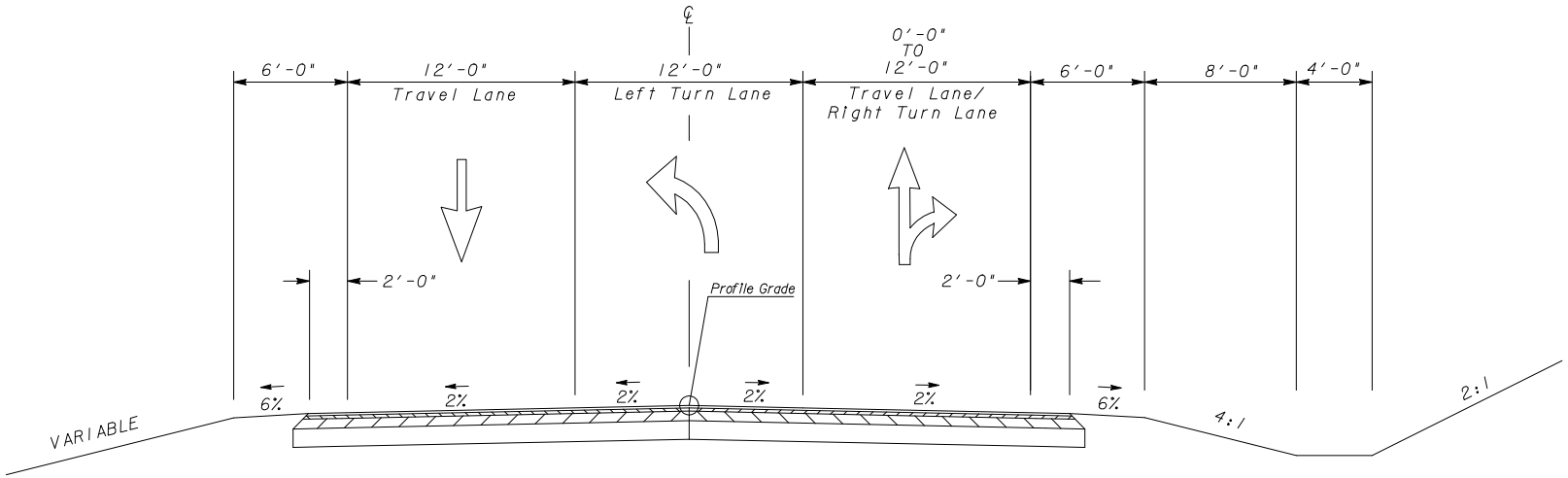

TANGENT SECTION

THOMPSON RD & ETOWAH RIVER RD

DAWSON COUNTY, SR 53 @ Thompson Road (CR 76)																			
Accident No	Date	Time	County	Route Type	Route	Milelog	Intersecting Rt Type	Intersecting Rt	Injuries	Fatalities	Harmful Event	Collision	Location of Impact	Light	Surface	DirVeh1	DirVeh2	MnvrVeh1	MnvrVeh2
'42670281	8/4/2004	11:58 AM	Dawson	State Route	'005300	12.89	2	'007600	0	0	Motor Vehicle in Motion	Rear End	On Roadway	Daylight	Dry	W	W	Straight	Turning Left
'41920660	6/5/2004	10:09 AM	Dawson	State Route	'005300	12.89	2	'007600	1	0	Utility Pole	Not A Collision With A Motor Vehicle	Off Roadway	Daylight	Dry	E		Straight	
'44080746	10/24/2004	7:04 PM	Dawson	State Route	'005300	12.89	2	'007600	0	0	Motor Vehicle in Motion	Rear End	On Roadway	Dusk	Dry	W	W	Straight	Straight
'44360317	11/26/2004	3:54 AM	Dawson	State Route	'005300	12.89	2	'007600	0	0	Deer	Not A Collision With A Motor Vehicle	On Roadway	Dark-Not Lighted	Dry	E		Straight	
'44630152	12/10/2004	10:47 AM	Dawson	State Route	'005300	12.89	2	'007600	2	0	Motor Vehicle in Motion	Rear End	On Roadway	Daylight	Dry	W	W	Straight	Turning Left
'50570114	2/23/2005	10:04 AM	Dawson	State Route	'005300	12.93	2	'007600	1	0	Motor Vehicle in Motion	Sideswipe - Opposite Direction	On Roadway	Daylight	Dry	E	E	Straight	Straight
'50470610	2/19/2005	9:44 AM	Dawson	State Route	'005300	12.93	2	'007600	0	0	Motor Vehicle in Motion	Rear End	On Roadway	Daylight	Dry	E	E	Straight	Stopped
'50190455	1/21/2005	3:07 PM	Dawson	State Route	'005300	12.93	2	'007600	0	0	Motor Vehicle in Motion	Rear End	On Roadway	Daylight	Dry	E	E	Straight	Stopped
'50110260	1/6/2005	8:03 AM	Dawson	State Route	'005300	12.93	2	'007600	0	0	Motor Vehicle in Motion	Rear End	On Roadway	Daylight	Wet	W	W	Straight	Straight
'54010257	10/17/2005	12:42 PM	Dawson	State Route	'005300	12.93	2	'007600	0	0	Motor Vehicle in Motion	Sideswipe - Same Direction	On Roadway	Daylight	Dry	E	E	Negotiating a Curve	Turning Right
'53310628	9/12/2005	6:26 AM	Dawson	State Route	'005300	12.93	2	'007600	2	0	Motor Vehicle in Motion	Rear End	On Roadway	Dark-Not Lighted	Dry	W	W	Straight	Turning Left
'52850389	8/7/2005	1:38 PM	Dawson	State Route	'005300	12.93	2	'007600	0	0	Motor Vehicle in Motion	Sideswipe - Opposite Direction	On Roadway	Daylight	Wet	E	N	Turning Right	Stopped
'51180282	3/16/2005	12:30 PM	Dawson	State Route	'005300	12.93	2	'007600	2	0	Motor Vehicle in Motion	Rear End	On Roadway	Daylight	Wet	E	E	Straight	Stopped
'52170654	6/15/2005	4:12 PM	Dawson	State Route	'005300	12.93	2	'007600	1	0	Motor Vehicle in Motion	Rear End	On Roadway	Daylight	Dry	W	W	Straight	Turning Left
'60450541	2/8/2006	11:41 PM	Dawson	State Route	'005300	12.93	2	'007600	0	0	Motor Vehicle in Motion	Rear End	On Roadway	Dark-Not Lighted	Dry	W	W	Straight	Turning Left
'64950182	12/22/2006	1:22 PM	Dawson	State Route	'005300	12.93	2	'007600	0	0	Motor Vehicle in Motion	Rear End	On Roadway	Daylight	Wet	W	W	Straight	Turning Left
'64600010	11/12/2006	12:17 PM	Dawson	State Route	'005300	12.93	2	'007600	0	0	Motor Vehicle in Motion	Rear End	On Roadway	Daylight	Dry	W	W	Straight	Stopped

1: SR 53 & Etowah River Rd
J:\700\721-581\Analyses\Synchro\2010 am with existing.sy7

Movement	EBL	EBT	EBR	WBL	WBT	WBR	NBL	NBT	NBR	SBL	SBT	SBR
Lane Configurations												
Sign Control		Free			Free			Stop			Stop	
Grade		0%			0%			0%			0%	
Volume (veh/h)	20	660	50	40	550	40	70	10	50	90	20	30
Peak Hour Factor	0.92	0.92	0.92	0.91	0.91	0.91	0.75	0.75	0.75	0.81	0.81	0.81
Hourly flow rate (vph)	22	717	54	44	604	44	93	13	67	111	25	37
Pedestrians												
Lane Width (ft)												
Walking Speed (ft/s)												
Percent Blockage												
Right turn flare (veh)												
Median type								None			None	
Median storage veh)												
Upstream signal (ft)												
pX, platoon unblocked												
vC, conflicting volume	648			772			1552	1524	745	1576	1530	626
vC1, stage 1 conf vol												
vC2, stage 2 conf vol												
vCu, unblocked vol	648			772			1552	1524	745	1576	1530	626
tC, single (s)	4.1			4.1			7.1	6.5	6.2	7.2	6.5	6.3
tC, 2 stage (s)												
tF (s)	2.2			2.2			3.5	4.0	3.3	3.6	4.0	3.4
p0 queue free %	98			95			0	88	84	0	77	92
cM capacity (veh/h)	947			839			67	110	414	63	109	471

Direction, Lane #	EB 1	WB 1	NB 1	SB 1
Volume Total	793	692	173	173
Volume Left	22	44	93	111
Volume Right	54	44	67	37
cSH	947	839	104	83
Volume to Capacity	0.02	0.05	1.67	2.08
Queue Length 95th (ft)	2	4	338	386
Control Delay (s)	0.6	1.4	411.3	607.2
Lane LOS	A	A	F	F
Approach Delay (s)	0.6	1.4	411.3	607.2
Approach LOS			F	F

Intersection Summary			
Average Delay	97.0		
Intersection Capacity Utilization	67.2%	ICU Level of Service	C
Analysis Period (min)	15		

1: SR 53 & Etowah River Rd
J:\700\721-581\Analyses\Synchro\2010 pm with existing.sy7

Movement	EBL	EBT	EBR	WBL	WBT	WBR	NBL	NBT	NBR	SBL	SBT	SBR
Lane Configurations												
Sign Control		Free			Free			Stop			Stop	
Grade		0%			0%			0%			0%	
Volume (veh/h)	30	550	70	50	660	90	50	20	40	40	10	20
Peak Hour Factor	0.95	0.95	0.95	0.92	0.92	0.92	0.88	0.88	0.88	0.84	0.84	0.84
Hourly flow rate (vph)	32	579	74	54	717	98	57	23	45	48	12	24
Pedestrians												
Lane Width (ft)												
Walking Speed (ft/s)												
Percent Blockage												
Right turn flare (veh)												
Median type								None			None	
Median storage veh)												
Upstream signal (ft)												
pX, platoon unblocked												
vC, conflicting volume	815			653			1584	1603	616	1611	1591	766
vC1, stage 1 conf vol												
vC2, stage 2 conf vol												
vCu, unblocked vol	815			653			1584	1603	616	1611	1591	766
tC, single (s)	4.2			4.1			7.1	6.5	6.2	7.2	6.5	6.2
tC, 2 stage (s)												
tF (s)	2.3			2.2			3.5	4.0	3.3	3.6	4.0	3.3
p0 queue free %	96			94			19	76	91	15	88	94
cM capacity (veh/h)	766			925			70	96	491	56	98	406

Direction, Lane #	EB 1	WB 1	NB 1	SB 1
Volume Total	684	870	125	83
Volume Left	32	54	57	48
Volume Right	74	98	45	24
cSH	766	925	110	81
Volume to Capacity	0.04	0.06	1.14	1.03
Queue Length 95th (ft)	3	5	197	143
Control Delay (s)	1.1	1.5	202.1	198.3
Lane LOS	A	A	F	F
Approach Delay (s)	1.1	1.5	202.1	198.3
Approach LOS			F	F

Intersection Summary			
Average Delay	24.9		
Intersection Capacity Utilization	72.1%	ICU Level of Service	C
Analysis Period (min)	15		

1: SR 53 & Etowah River Rd
J:\700\721-581\Analyses\Synchro\2010 am with EBL & WBL.sy7

Movement	EBL	EBT	EBR	WBL	WBT	WBR	NBL	NBT	NBR	SBL	SBT	SBR
Lane Configurations												
Sign Control		Free			Free			Stop			Stop	
Grade		0%			0%			0%			0%	
Volume (veh/h)	20	660	50	40	550	40	70	10	50	90	20	30
Peak Hour Factor	0.92	0.92	0.92	0.91	0.91	0.91	0.75	0.75	0.75	0.81	0.81	0.81
Hourly flow rate (vph)	22	717	54	44	604	44	93	13	67	111	25	37
Pedestrians												
Lane Width (ft)												
Walking Speed (ft/s)												
Percent Blockage												
Right turn flare (veh)												
Median type								None			None	
Median storage veh)												
Upstream signal (ft)												
pX, platoon unblocked												
vC, conflicting volume	648			772			1530	1524	745	1548	1530	626
vC1, stage 1 conf vol												
vC2, stage 2 conf vol												
vCu, unblocked vol	648			772			1530	1524	745	1548	1530	626
tC, single (s)	4.1			4.1			7.1	6.5	6.2	7.2	6.5	6.3
tC, 2 stage (s)												
tF (s)	2.2			2.2			3.5	4.0	3.3	3.6	4.0	3.4
p0 queue free %	98			95			0	88	84	0	77	92
cM capacity (veh/h)	947			839			70	110	414	65	109	471

Direction, Lane #	EB 1	EB 2	WB 1	WB 2	NB 1	SB 1
Volume Total	22	772	44	648	173	173
Volume Left	22	0	44	0	93	111
Volume Right	0	54	0	44	67	37
cSH	947	1700	839	1700	107	86
Volume to Capacity	0.02	0.45	0.05	0.38	1.62	2.00
Queue Length 95th (ft)	2	0	4	0	331	378
Control Delay (s)	8.9	0.0	9.5	0.0	388.8	570.5
Lane LOS	A		A		F	F
Approach Delay (s)	0.2		0.6		388.8	570.5
Approach LOS					F	F

Intersection Summary			
Average Delay	90.9		
Intersection Capacity Utilization	54.8%	ICU Level of Service	A
Analysis Period (min)	15		

Movement	EBL	EBT	EBR	WBL	WBT	WBR	NBL	NBT	NBR	SBL	SBT	SBR
Lane Configurations												
Sign Control		Free			Free			Stop			Stop	
Grade		0%			0%			0%			0%	
Volume (veh/h)	30	550	70	50	660	90	50	20	40	40	10	20
Peak Hour Factor	0.95	0.95	0.95	0.92	0.92	0.92	0.88	0.88	0.88	0.84	0.84	0.84
Hourly flow rate (vph)	32	579	74	54	717	98	57	23	45	48	12	24
Pedestrians												
Lane Width (ft)												
Walking Speed (ft/s)												
Percent Blockage												
Right turn flare (veh)												
Median type								None			None	
Median storage veh)												
Upstream signal (ft)												
pX, platoon unblocked												
vC, conflicting volume	815			653			1535	1603	616	1574	1591	766
vC1, stage 1 conf vol												
vC2, stage 2 conf vol												
vCu, unblocked vol	815			653			1535	1603	616	1574	1591	766
tC, single (s)	4.2			4.1			7.1	6.5	6.2	7.2	6.5	6.2
tC, 2 stage (s)												
tF (s)	2.3			2.2			3.5	4.0	3.3	3.6	4.0	3.3
p0 queue free %	96			94			25	76	91	20	88	94
cM capacity (veh/h)	766			925			76	96	491	60	98	406

Direction, Lane #	EB 1	EB 2	WB 1	WB 2	NB 1	SB 1
Volume Total	32	653	54	815	125	83
Volume Left	32	0	54	0	57	48
Volume Right	0	74	0	98	45	24
cSH	766	1700	925	1700	116	85
Volume to Capacity	0.04	0.38	0.06	0.48	1.08	0.98
Queue Length 95th (ft)	3	0	5	0	186	137
Control Delay (s)	9.9	0.0	9.1	0.0	177.2	178.3
Lane LOS	A		A		F	F
Approach Delay (s)	0.5		0.6		177.2	178.3
Approach LOS					F	F

Intersection Summary			
Average Delay	21.5		
Intersection Capacity Utilization	55.3%	ICU Level of Service	B
Analysis Period (min)	15		

1: SR 53 & Etowah River Rd
J:\700\721-581\Analyses\Synchro\2010 am with EBLR & WBLR.sy7

Movement	EBL	EBT	EBR	WBL	WBT	WBR	NBL	NBT	NBR	SBL	SBT	SBR
Lane Configurations												
Sign Control		Free			Free			Stop			Stop	
Grade		0%			0%			0%			0%	
Volume (veh/h)	20	660	50	40	550	40	70	10	50	90	20	30
Peak Hour Factor	0.92	0.92	0.92	0.91	0.91	0.91	0.75	0.75	0.75	0.81	0.81	0.81
Hourly flow rate (vph)	22	717	54	44	604	44	93	13	67	111	25	37
Pedestrians												
Lane Width (ft)												
Walking Speed (ft/s)												
Percent Blockage												
Right turn flare (veh)												
Median type								None			None	
Median storage veh)												
Upstream signal (ft)												
pX, platoon unblocked												
vC, conflicting volume	648			772			1503	1497	717	1527	1508	604
vC1, stage 1 conf vol												
vC2, stage 2 conf vol												
vCu, unblocked vol	648			772			1503	1497	717	1527	1508	604
tC, single (s)	4.1			4.1			7.1	6.5	6.2	7.2	6.5	6.3
tC, 2 stage (s)												
tF (s)	2.2			2.2			3.5	4.0	3.3	3.6	4.0	3.4
p0 queue free %	98			95			0	88	84	0	78	92
cM capacity (veh/h)	947			839			73	115	429	68	113	485

Direction, Lane #	EB 1	EB 2	EB 3	WB 1	WB 2	WB 3	NB 1	SB 1
Volume Total	22	717	54	44	604	44	173	173
Volume Left	22	0	0	44	0	0	93	111
Volume Right	0	0	54	0	0	44	67	37
cSH	947	1700	1700	839	1700	1700	112	90
Volume to Capacity	0.02	0.42	0.03	0.05	0.36	0.03	1.54	1.92
Queue Length 95th (ft)	2	0	0	4	0	0	318	369
Control Delay (s)	8.9	0.0	0.0	9.5	0.0	0.0	352.3	529.6
Lane LOS	A			A			F	F
Approach Delay (s)	0.2			0.6			352.3	529.6
Approach LOS							F	F

Intersection Summary			
Average Delay	83.6		
Intersection Capacity Utilization	51.8%	ICU Level of Service	A
Analysis Period (min)	15		

1: SR 53 & Etowah River Rd
J:\700\721-581\Analyses\Synchro\2010 pm with EBLR & WBLR.sy7

Movement	EBL	EBT	EBR	WBL	WBT	WBR	NBL	NBT	NBR	SBL	SBT	SBR
Lane Configurations												
Sign Control		Free			Free			Stop			Stop	
Grade		0%			0%			0%			0%	
Volume (veh/h)	30	550	70	50	660	90	50	20	40	40	10	20
Peak Hour Factor	0.95	0.95	0.95	0.92	0.92	0.92	0.88	0.88	0.88	0.84	0.84	0.84
Hourly flow rate (vph)	32	579	74	54	717	98	57	23	45	48	12	24
Pedestrians												
Lane Width (ft)												
Walking Speed (ft/s)												
Percent Blockage												
Right turn flare (veh)												
Median type								None			None	
Median storage veh)												
Upstream signal (ft)												
pX, platoon unblocked												
vC, conflicting volume	815			653			1498	1566	579	1525	1542	717
vC1, stage 1 conf vol												
vC2, stage 2 conf vol												
vCu, unblocked vol	815			653			1498	1566	579	1525	1542	717
tC, single (s)	4.2			4.1			7.1	6.5	6.2	7.2	6.5	6.2
tC, 2 stage (s)												
tF (s)	2.3			2.2			3.5	4.0	3.3	3.6	4.0	3.3
p0 queue free %	96			94			30	78	91	28	89	94
cM capacity (veh/h)	766			925			81	101	515	66	105	433

Direction, Lane #	EB 1	EB 2	EB 3	WB 1	WB 2	WB 3	NB 1	SB 1
Volume Total	32	579	74	54	717	98	125	83
Volume Left	32	0	0	54	0	0	57	48
Volume Right	0	0	74	0	0	98	45	24
cSH	766	1700	1700	925	1700	1700	124	93
Volume to Capacity	0.04	0.34	0.04	0.06	0.42	0.06	1.01	0.89
Queue Length 95th (ft)	3	0	0	5	0	0	173	125
Control Delay (s)	9.9	0.0	0.0	9.1	0.0	0.0	151.5	146.2
Lane LOS	A			A			F	F
Approach Delay (s)	0.5			0.6			151.5	146.2
Approach LOS							F	F

Intersection Summary			
Average Delay	18.1		
Intersection Capacity Utilization	55.2%	ICU Level of Service	B
Analysis Period (min)	15		

1: SR 53 & Etowah River Rd
J:\700\721-581\Analyses\Synchro\2010 am with EBLR & WBLR & NBL & SBL.sy7

Movement	EBL	EBT	EBR	WBL	WBT	WBR	NBL	NBT	NBR	SBL	SBT	SBR
Lane Configurations												
Sign Control		Free			Free			Stop			Stop	
Grade		0%			0%			0%			0%	
Volume (veh/h)	20	660	50	40	550	40	70	10	50	90	20	30
Peak Hour Factor	0.92	0.92	0.92	0.91	0.91	0.91	0.75	0.75	0.75	0.81	0.81	0.81
Hourly flow rate (vph)	22	717	54	44	604	44	93	13	67	111	25	37
Pedestrians												
Lane Width (ft)												
Walking Speed (ft/s)												
Percent Blockage												
Right turn flare (veh)												
Median type								None			None	
Median storage veh)												
Upstream signal (ft)												
pX, platoon unblocked												
vC, conflicting volume	648			772			1503	1497	717	1527	1508	604
vC1, stage 1 conf vol												
vC2, stage 2 conf vol												
vCu, unblocked vol	648			772			1503	1497	717	1527	1508	604
tC, single (s)	4.1			4.1			7.1	6.5	6.2	7.2	6.5	6.3
tC, 2 stage (s)												
tF (s)	2.2			2.2			3.5	4.0	3.3	3.6	4.0	3.4
p0 queue free %	98			95			0	88	84	0	78	92
cM capacity (veh/h)	947			839			73	115	429	68	113	485

Direction, Lane #	EB 1	EB 2	EB 3	WB 1	WB 2	WB 3	NB 1	NB 2	SB 1	SB 2
Volume Total	22	717	54	44	604	44	93	80	111	62
Volume Left	22	0	0	44	0	0	93	0	111	0
Volume Right	0	0	54	0	0	44	0	67	0	37
cSH	947	1700	1700	839	1700	1700	73	294	68	209
Volume to Capacity	0.02	0.42	0.03	0.05	0.36	0.03	1.27	0.27	1.62	0.29
Queue Length 95th (ft)	2	0	0	4	0	0	182	27	241	29
Control Delay (s)	8.9	0.0	0.0	9.5	0.0	0.0	293.6	21.7	439.1	29.2
Lane LOS	A			A			F	C	F	D
Approach Delay (s)	0.2			0.6			168.1		292.7	
Approach LOS							F		F	

Intersection Summary			
Average Delay	43.9		
Intersection Capacity Utilization	53.1%	ICU Level of Service	A
Analysis Period (min)	15		

1: SR 53 & Etowah River Rd
J:\700\721-581\Analyses\Synchro\2010 pm with EBLR & WBLR & NBL & SBL.sy7

Movement	EBL	EBT	EBR	WBL	WBT	WBR	NBL	NBT	NBR	SBL	SBT	SBR
Lane Configurations												
Sign Control		Free			Free			Stop			Stop	
Grade		0%			0%			0%			0%	
Volume (veh/h)	30	550	70	50	660	90	50	20	40	40	10	20
Peak Hour Factor	0.95	0.95	0.95	0.92	0.92	0.92	0.88	0.88	0.88	0.84	0.84	0.84
Hourly flow rate (vph)	32	579	74	54	717	98	57	23	45	48	12	24
Pedestrians												
Lane Width (ft)												
Walking Speed (ft/s)												
Percent Blockage												
Right turn flare (veh)												
Median type								None			None	
Median storage veh)												
Upstream signal (ft)												
pX, platoon unblocked												
vC, conflicting volume	815			653			1498	1566	579	1525	1542	717
vC1, stage 1 conf vol												
vC2, stage 2 conf vol												
vCu, unblocked vol	815			653			1498	1566	579	1525	1542	717
tC, single (s)	4.2			4.1			7.1	6.5	6.2	7.2	6.5	6.2
tC, 2 stage (s)												
tF (s)	2.3			2.2			3.5	4.0	3.3	3.6	4.0	3.3
p0 queue free %	96			94			30	78	91	28	89	94
cM capacity (veh/h)	766			925			81	101	515	66	105	433

Direction, Lane #	EB 1	EB 2	EB 3	WB 1	WB 2	WB 3	NB 1	NB 2	SB 1	SB 2
Volume Total	32	579	74	54	717	98	57	68	48	36
Volume Left	32	0	0	54	0	0	57	0	48	0
Volume Right	0	0	74	0	0	98	0	45	0	24
cSH	766	1700	1700	925	1700	1700	81	218	66	212
Volume to Capacity	0.04	0.34	0.04	0.06	0.42	0.06	0.70	0.31	0.72	0.17
Queue Length 95th (ft)	3	0	0	5	0	0	83	32	81	15
Control Delay (s)	9.9	0.0	0.0	9.1	0.0	0.0	117.3	28.8	145.0	25.4
Lane LOS	A			A			F	D	F	D
Approach Delay (s)	0.5			0.6			69.1		93.8	
Approach LOS							F		F	

Intersection Summary			
Average Delay	9.8		
Intersection Capacity Utilization	57.5%	ICU Level of Service	B
Analysis Period (min)	15		

1: SR 53 & Etowah River Rd
J:\700\721-581\Analyses\Synchro\2010 am with signal & EBLR & WBLR.sy7

Movement	EBL	EBT	EBR	WBL	WBT	WBR	NBL	NBT	NBR	SBL	SBT	SBR
Lane Configurations												
Ideal Flow (vphpl)	1900	1900	1900	1900	1900	1900	1900	1900	1900	1900	1900	1900
Total Lost time (s)	4.0	4.0	4.0	4.0	4.0	4.0		4.0			4.0	
Lane Util. Factor	1.00	1.00	1.00	1.00	1.00	1.00		1.00			1.00	
Frt	1.00	1.00	0.85	1.00	1.00	0.85		0.95			0.97	
Flt Protected	0.95	1.00	1.00	0.95	1.00	1.00		0.97			0.97	
Satd. Flow (prot)	1805	1827	1455	1752	1776	1313		1740			1690	
Flt Permitted	0.32	1.00	1.00	0.24	1.00	1.00		0.78			0.75	
Satd. Flow (perm)	608	1827	1455	434	1776	1313		1401			1309	
Volume (vph)	20	660	50	40	550	40	70	10	50	90	20	30
Peak-hour factor, PHF	0.92	0.92	0.92	0.91	0.91	0.91	0.75	0.75	0.75	0.81	0.81	0.81
Adj. Flow (vph)	22	717	54	44	604	44	93	13	67	111	25	37
RTOR Reduction (vph)	0	0	25	0	0	20	0	39	0	0	17	0
Lane Group Flow (vph)	22	717	29	44	604	24	0	134	0	0	156	0
Heavy Vehicles (%)	0%	4%	11%	3%	7%	23%	0%	0%	2%	6%	0%	9%
Turn Type	Perm		Perm	Perm		Perm	Perm			Perm		
Protected Phases		4			8			2			6	
Permitted Phases	4		4	8		8	2			6		
Actuated Green, G (s)	21.9	21.9	21.9	21.9	21.9	21.9		10.5			10.5	
Effective Green, g (s)	23.9	23.9	23.9	23.9	23.9	23.9		12.5			12.5	
Actuated g/C Ratio	0.54	0.54	0.54	0.54	0.54	0.54		0.28			0.28	
Clearance Time (s)	6.0	6.0	6.0	6.0	6.0	6.0		6.0			6.0	
Vehicle Extension (s)	3.0	3.0	3.0	3.0	3.0	3.0		3.0			3.0	
Lane Grp Cap (vph)	327	983	783	234	956	707		394			369	
v/s Ratio Prot		c0.39			0.34							
v/s Ratio Perm	0.04		0.02	0.10		0.02		0.10			c0.12	
v/c Ratio	0.07	0.73	0.04	0.19	0.63	0.03		0.34			0.42	
Uniform Delay, d1	4.9	7.8	4.8	5.3	7.2	4.8		12.7			13.0	
Progression Factor	1.00	1.00	1.00	1.00	1.00	1.00		1.00			1.00	
Incremental Delay, d2	0.1	2.7	0.0	0.4	1.4	0.0		0.5			0.8	
Delay (s)	5.0	10.5	4.8	5.7	8.5	4.8		13.2			13.8	
Level of Service	A	B	A	A	A	A		B			B	
Approach Delay (s)		10.0			8.1			13.2			13.8	
Approach LOS		A			A			B			B	

Intersection Summary			
HCM Average Control Delay	9.9	HCM Level of Service	A
HCM Volume to Capacity ratio	0.62		
Actuated Cycle Length (s)	44.4	Sum of lost time (s)	8.0
Intersection Capacity Utilization	51.8%	ICU Level of Service	A
Analysis Period (min)	15		

c Critical Lane Group

1: SR 53 & Etowah River Rd
J:\700\721-581\Analyses\Synchro\2010 pm with signal & EBLR & WBLR.sy7

Movement	EBL	EBT	EBR	WBL	WBT	WBR	NBL	NBT	NBR	SBL	SBT	SBR
Lane Configurations												
Ideal Flow (vphpl)	1900	1900	1900	1900	1900	1900	1900	1900	1900	1900	1900	1900
Total Lost time (s)	4.0	4.0	4.0	4.0	4.0	4.0		4.0			4.0	
Lane Util. Factor	1.00	1.00	1.00	1.00	1.00	1.00		1.00			1.00	
Frt	1.00	1.00	0.85	1.00	1.00	0.85		0.95			0.96	
Flt Protected	0.95	1.00	1.00	0.95	1.00	1.00		0.98			0.97	
Satd. Flow (prot)	1597	1845	1524	1736	1827	1553		1755			1708	
Flt Permitted	0.25	1.00	1.00	0.36	1.00	1.00		0.82			0.80	
Satd. Flow (perm)	428	1845	1524	651	1827	1553		1466			1398	
Volume (vph)	30	550	70	50	660	90	50	20	40	40	10	20
Peak-hour factor, PHF	0.95	0.95	0.95	0.92	0.92	0.92	0.88	0.88	0.88	0.84	0.84	0.84
Adj. Flow (vph)	32	579	74	54	717	98	57	23	45	48	12	24
RTOR Reduction (vph)	0	0	33	0	0	43	0	34	0	0	18	0
Lane Group Flow (vph)	32	579	41	54	717	55	0	91	0	0	66	0
Heavy Vehicles (%)	13%	3%	6%	4%	4%	4%	0%	0%	2%	7%	0%	0%
Turn Type	Perm		Perm	Perm		Perm	Perm			Perm		
Protected Phases		4			8			2			6	
Permitted Phases	4		4	8		8	2			6		
Actuated Green, G (s)	20.7	20.7	20.7	20.7	20.7	20.7		8.1			8.1	
Effective Green, g (s)	22.7	22.7	22.7	22.7	22.7	22.7		10.1			10.1	
Actuated g/C Ratio	0.56	0.56	0.56	0.56	0.56	0.56		0.25			0.25	
Clearance Time (s)	6.0	6.0	6.0	6.0	6.0	6.0		6.0			6.0	
Vehicle Extension (s)	3.0	3.0	3.0	3.0	3.0	3.0		3.0			3.0	
Lane Grp Cap (vph)	238	1027	848	362	1016	864		363			346	
v/s Ratio Prot		0.31			c0.39							
v/s Ratio Perm	0.07		0.03	0.08		0.04		c0.06			0.05	
v/c Ratio	0.13	0.56	0.05	0.15	0.71	0.06		0.25			0.19	
Uniform Delay, d1	4.3	5.8	4.1	4.4	6.6	4.2		12.3			12.1	
Progression Factor	1.00	1.00	1.00	1.00	1.00	1.00		1.00			1.00	
Incremental Delay, d2	0.3	0.7	0.0	0.2	2.3	0.0		0.4			0.3	
Delay (s)	4.6	6.6	4.2	4.6	8.9	4.2		12.7			12.4	
Level of Service	A	A	A	A	A	A		B			B	
Approach Delay (s)		6.2			8.1			12.7			12.4	
Approach LOS		A			A			B			B	

Intersection Summary			
HCM Average Control Delay	7.9	HCM Level of Service	A
HCM Volume to Capacity ratio	0.57		
Actuated Cycle Length (s)	40.8	Sum of lost time (s)	8.0
Intersection Capacity Utilization	55.2%	ICU Level of Service	B
Analysis Period (min)	15		

c Critical Lane Group

Movement	EBL	EBT	EBR	WBL	WBT	WBR	NBL	NBT	NBR	SBL	SBT	SBR
Lane Configurations												
Sign Control		Free			Free			Stop			Stop	
Grade		0%			0%			0%			0%	
Volume (veh/h)	20	1060	50	70	890	60	80	10	90	120	30	40
Peak Hour Factor	0.92	0.92	0.92	0.91	0.91	0.91	0.75	0.75	0.75	0.81	0.81	0.81
Hourly flow rate (vph)	22	1152	54	77	978	66	107	13	120	148	37	49
Pedestrians												
Lane Width (ft)												
Walking Speed (ft/s)												
Percent Blockage												
Right turn flare (veh)												
Median type								None			None	
Median storage veh)												
Upstream signal (ft)												
pX, platoon unblocked												
vC, conflicting volume	1044			1207			2456	2421	1179	2514	2415	1011
vC1, stage 1 conf vol												
vC2, stage 2 conf vol												
vCu, unblocked vol	1044			1207			2456	2421	1179	2514	2415	1011
tC, single (s)	4.1			4.1			7.1	6.5	6.2	7.2	6.5	6.3
tC, 2 stage (s)												
tF (s)	2.2			2.2			3.5	4.0	3.3	3.6	4.0	3.4
p0 queue free %	97			87			0	52	48	0	0	82
cM capacity (veh/h)	674			575			0	28	232	5	28	282

Direction, Lane #	EB 1	WB 1	NB 1	SB 1
Volume Total	1228	1121	240	235
Volume Left	22	77	107	148
Volume Right	54	66	120	49
cSH	674	575	0	7
Volume to Capacity	0.03	0.13	Err	31.76
Queue Length 95th (ft)	2	12	Err	Err
Control Delay (s)	1.3	4.8	Err	Err
Lane LOS	A	A	F	F
Approach Delay (s)	1.3	4.8	Err	Err
Approach LOS			F	F

Intersection Summary			
Average Delay	Err		
Intersection Capacity Utilization	111.9%	ICU Level of Service	H
Analysis Period (min)	15		

1: SR 53 & Etowah River Rd
J:\700\721-581\Analyses\Synchro\2030 pm with existing.sy7

Movement	EBL	EBT	EBR	WBL	WBT	WBR	NBL	NBT	NBR	SBL	SBT	SBR
Lane Configurations												
Sign Control		Free			Free			Stop			Stop	
Grade		0%			0%			0%			0%	
Volume (veh/h)	40	890	80	90	1060	120	50	30	70	60	10	20
Peak Hour Factor	0.95	0.95	0.95	0.92	0.92	0.92	0.88	0.88	0.88	0.84	0.84	0.84
Hourly flow rate (vph)	42	937	84	98	1152	130	57	34	80	71	12	24
Pedestrians												
Lane Width (ft)												
Walking Speed (ft/s)												
Percent Blockage												
Right turn flare (veh)												
Median type								None			None	
Median storage veh)												
Upstream signal (ft)												
pX, platoon unblocked												
vC, conflicting volume	1283			1021			2506	2541	979	2573	2518	1217
vC1, stage 1 conf vol												
vC2, stage 2 conf vol												
vCu, unblocked vol	1283			1021			2506	2541	979	2573	2518	1217
tC, single (s)	4.2			4.1			7.1	6.5	6.2	7.2	6.5	6.2
tC, 2 stage (s)												
tF (s)	2.3			2.2			3.5	4.0	3.3	3.6	4.0	3.3
p0 queue free %	92			85			0	0	74	0	47	89
cM capacity (veh/h)	506			672			9	22	303	0	22	222

Direction, Lane #	EB 1	WB 1	NB 1	SB 1
Volume Total	1063	1380	170	107
Volume Left	42	98	57	71
Volume Right	84	130	80	24
cSH	506	672	20	0
Volume to Capacity	0.08	0.15	8.46	Err
Queue Length 95th (ft)	7	13	Err	Err
Control Delay (s)	3.1	7.0	Err	Err
Lane LOS	A	A	F	F
Approach Delay (s)	3.1	7.0	Err	Err
Approach LOS			F	F

Intersection Summary			
Average Delay	Err		
Intersection Capacity Utilization	115.0%	ICU Level of Service	H
Analysis Period (min)	15		

Movement	EBL	EBT	EBR	WBL	WBT	WBR	NBL	NBT	NBR	SBL	SBT	SBR
Lane Configurations												
Sign Control		Free			Free			Stop			Stop	
Grade		0%			0%			0%			0%	
Volume (veh/h)	20	1060	50	70	890	60	80	10	90	120	30	40
Peak Hour Factor	0.92	0.92	0.92	0.91	0.91	0.91	0.75	0.75	0.75	0.81	0.81	0.81
Hourly flow rate (vph)	22	1152	54	77	978	66	107	13	120	148	37	49
Pedestrians												
Lane Width (ft)												
Walking Speed (ft/s)												
Percent Blockage												
Right turn flare (veh)												
Median type								None			None	
Median storage veh)												
Upstream signal (ft)												
pX, platoon unblocked												
vC, conflicting volume	1044			1207			2423	2421	1179	2487	2415	1011
vC1, stage 1 conf vol												
vC2, stage 2 conf vol												
vCu, unblocked vol	1044			1207			2423	2421	1179	2487	2415	1011
tC, single (s)	4.1			4.1			7.1	6.5	6.2	7.2	6.5	6.3
tC, 2 stage (s)												
tF (s)	2.2			2.2			3.5	4.0	3.3	3.6	4.0	3.4
p0 queue free %	97			87			0	52	48	0	0	82
cM capacity (veh/h)	674			575			0	28	232	5	28	282

Direction, Lane #	EB 1	EB 2	WB 1	WB 2	NB 1	SB 1
Volume Total	22	1207	77	1044	240	235
Volume Left	22	0	77	0	107	148
Volume Right	0	54	0	66	120	49
cSH	674	1700	575	1700	0	8
Volume to Capacity	0.03	0.71	0.13	0.61	Err	30.41
Queue Length 95th (ft)	2	0	12	0	Err	Err
Control Delay (s)	10.5	0.0	12.2	0.0	Err	Err
Lane LOS	B		B		F	F
Approach Delay (s)	0.2		0.8		Err	Err
Approach LOS					F	F

Intersection Summary			
Average Delay	Err		
Intersection Capacity Utilization	81.4%	ICU Level of Service	D
Analysis Period (min)	15		

1: SR 53 & Etowah River Rd
J:\700\721-581\Analyses\Synchro\2030 pm with EBL & WBL.sy7

Movement	EBL	EBT	EBR	WBL	WBT	WBR	NBL	NBT	NBR	SBL	SBT	SBR
Lane Configurations												
Sign Control		Free			Free			Stop			Stop	
Grade		0%			0%			0%			0%	
Volume (veh/h)	40	890	80	90	1060	120	50	30	70	60	10	20
Peak Hour Factor	0.95	0.95	0.95	0.92	0.92	0.92	0.88	0.88	0.88	0.84	0.84	0.84
Hourly flow rate (vph)	42	937	84	98	1152	130	57	34	80	71	12	24
Pedestrians												
Lane Width (ft)												
Walking Speed (ft/s)												
Percent Blockage												
Right turn flare (veh)												
Median type								None			None	
Median storage veh)												
Upstream signal (ft)												
pX, platoon unblocked												
vC, conflicting volume	1283			1021			2441	2541	979	2531	2518	1217
vC1, stage 1 conf vol												
vC2, stage 2 conf vol												
vCu, unblocked vol	1283			1021			2441	2541	979	2531	2518	1217
tC, single (s)	4.2			4.1			7.1	6.5	6.2	7.2	6.5	6.2
tC, 2 stage (s)												
tF (s)	2.3			2.2			3.5	4.0	3.3	3.6	4.0	3.3
p0 queue free %	92			85			0	0	74	0	47	89
cM capacity (veh/h)	506			672			10	22	303	0	22	222

Direction, Lane #	EB 1	EB 2	WB 1	WB 2	NB 1	SB 1
Volume Total	42	1021	98	1283	170	107
Volume Left	42	0	98	0	57	71
Volume Right	0	84	0	130	80	24
cSH	506	1700	672	1700	22	0
Volume to Capacity	0.08	0.60	0.15	0.75	7.78	Err
Queue Length 95th (ft)	7	0	13	0	Err	Err
Control Delay (s)	12.8	0.0	11.3	0.0	Err	Err
Lane LOS	B		B		F	F
Approach Delay (s)	0.5		0.8		Err	Err
Approach LOS					F	F

Intersection Summary			
Average Delay	Err		
Intersection Capacity Utilization	85.9%	ICU Level of Service	E
Analysis Period (min)	15		

1: SR 53 & Etowah River Rd
J:\700\721-581\Analyses\Synchro\2030 am with EBLR & WBLR.sy7

Movement	EBL	EBT	EBR	WBL	WBT	WBR	NBL	NBT	NBR	SBL	SBT	SBR
Lane Configurations												
Sign Control		Free			Free			Stop			Stop	
Grade		0%			0%			0%			0%	
Volume (veh/h)	20	1060	50	70	890	60	80	10	90	120	30	40
Peak Hour Factor	0.92	0.92	0.92	0.91	0.91	0.91	0.75	0.75	0.75	0.81	0.81	0.81
Hourly flow rate (vph)	22	1152	54	77	978	66	107	13	120	148	37	49
Pedestrians												
Lane Width (ft)												
Walking Speed (ft/s)												
Percent Blockage												
Right turn flare (veh)												
Median type								None			None	
Median storage veh)												
Upstream signal (ft)												
pX, platoon unblocked												
vC, conflicting volume	1044			1207			2395	2393	1152	2454	2382	978
vC1, stage 1 conf vol												
vC2, stage 2 conf vol												
vCu, unblocked vol	1044			1207			2395	2393	1152	2454	2382	978
tC, single (s)	4.1			4.1			7.1	6.5	6.2	7.2	6.5	6.3
tC, 2 stage (s)												
tF (s)	2.2			2.2			3.5	4.0	3.3	3.6	4.0	3.4
p0 queue free %	97			87			0	53	50	0	0	83
cM capacity (veh/h)	674			575			0	29	241	6	29	295

Direction, Lane #	EB 1	EB 2	EB 3	WB 1	WB 2	WB 3	NB 1	SB 1
Volume Total	22	1152	54	77	978	66	240	235
Volume Left	22	0	0	77	0	0	107	148
Volume Right	0	0	54	0	0	66	120	49
cSH	674	1700	1700	575	1700	1700	0	9
Volume to Capacity	0.03	0.68	0.03	0.13	0.58	0.04	Err	27.13
Queue Length 95th (ft)	2	0	0	12	0	0	Err	Err
Control Delay (s)	10.5	0.0	0.0	12.2	0.0	0.0	Err	Err
Lane LOS	B			B			F	F
Approach Delay (s)	0.2			0.8			Err	Err
Approach LOS							F	F

Intersection Summary			
Average Delay	Err		
Intersection Capacity Utilization	80.7%	ICU Level of Service	D
Analysis Period (min)	15		

1: SR 53 & Etowah River Rd
J:\700\721-581\Analyses\Synchro\2030 pm with EBLR & WBLR.sy7

Movement	EBL	EBT	EBR	WBL	WBT	WBR	NBL	NBT	NBR	SBL	SBT	SBR
Lane Configurations												
Sign Control		Free			Free			Stop			Stop	
Grade		0%			0%			0%			0%	
Volume (veh/h)	40	890	80	90	1060	120	50	30	70	60	10	20
Peak Hour Factor	0.95	0.95	0.95	0.92	0.92	0.92	0.88	0.88	0.88	0.84	0.84	0.84
Hourly flow rate (vph)	42	937	84	98	1152	130	57	34	80	71	12	24
Pedestrians												
Lane Width (ft)												
Walking Speed (ft/s)												
Percent Blockage												
Right turn flare (veh)												
Median type								None			None	
Median storage veh)												
Upstream signal (ft)												
pX, platoon unblocked												
vC, conflicting volume	1283			1021			2399	2499	937	2465	2453	1152
vC1, stage 1 conf vol												
vC2, stage 2 conf vol												
vCu, unblocked vol	1283			1021			2399	2499	937	2465	2453	1152
tC, single (s)	4.2			4.1			7.1	6.5	6.2	7.2	6.5	6.2
tC, 2 stage (s)												
tF (s)	2.3			2.2			3.5	4.0	3.3	3.6	4.0	3.3
p0 queue free %	92			85			0	0	75	0	51	90
cM capacity (veh/h)	506			672			11	23	321	0	25	243

Direction, Lane #	EB 1	EB 2	EB 3	WB 1	WB 2	WB 3	NB 1	SB 1
Volume Total	42	937	84	98	1152	130	170	107
Volume Left	42	0	0	98	0	0	57	71
Volume Right	0	0	84	0	0	130	80	24
cSH	506	1700	1700	672	1700	1700	25	0
Volume to Capacity	0.08	0.55	0.05	0.15	0.68	0.08	6.86	Err
Queue Length 95th (ft)	7	0	0	13	0	0	Err	Err
Control Delay (s)	12.8	0.0	0.0	11.3	0.0	0.0	Err	Err
Lane LOS	B			B			F	F
Approach Delay (s)	0.5			0.8			Err	Err
Approach LOS							F	F

Intersection Summary			
Average Delay	Err		
Intersection Capacity Utilization	78.6%	ICU Level of Service	D
Analysis Period (min)	15		

1: SR 53 & Etowah River Rd
J:\700\721-581\Analyses\Synchro\2030 am with EBLR & WBLR & NBL & SBL.sy7

Movement	EBL	EBT	EBR	WBL	WBT	WBR	NBL	NBT	NBR	SBL	SBT	SBR
Lane Configurations												
Sign Control		Free			Free			Stop			Stop	
Grade		0%			0%			0%			0%	
Volume (veh/h)	20	1060	50	70	890	60	80	10	90	120	30	40
Peak Hour Factor	0.92	0.92	0.92	0.91	0.91	0.91	0.75	0.75	0.75	0.81	0.81	0.81
Hourly flow rate (vph)	22	1152	54	77	978	66	107	13	120	148	37	49
Pedestrians												
Lane Width (ft)												
Walking Speed (ft/s)												
Percent Blockage												
Right turn flare (veh)												
Median type								None			None	
Median storage veh)												
Upstream signal (ft)												
pX, platoon unblocked												
vC, conflicting volume	1044			1207			2395	2393	1152	2454	2382	978
vC1, stage 1 conf vol												
vC2, stage 2 conf vol												
vCu, unblocked vol	1044			1207			2395	2393	1152	2454	2382	978
tC, single (s)	4.1			4.1			7.1	6.5	6.2	7.2	6.5	6.3
tC, 2 stage (s)												
tF (s)	2.2			2.2			3.5	4.0	3.3	3.6	4.0	3.4
p0 queue free %	97			87			0	53	50	0	0	83
cM capacity (veh/h)	674			575			0	29	241	6	29	295

Direction, Lane #	EB 1	EB 2	EB 3	WB 1	WB 2	WB 3	NB 1	NB 2	SB 1	SB 2
Volume Total	22	1152	54	77	978	66	107	133	148	86
Volume Left	22	0	0	77	0	0	107	0	148	0
Volume Right	0	0	54	0	0	66	0	120	0	49
cSH	674	1700	1700	575	1700	1700	0	138	6	60
Volume to Capacity	0.03	0.68	0.03	0.13	0.58	0.04	Err	0.96	25.69	1.44
Queue Length 95th (ft)	2	0	0	12	0	0	Err	169	Err	189
Control Delay (s)	10.5	0.0	0.0	12.2	0.0	0.0	Err	129.6	Err	383.9
Lane LOS	B			B			F	F	F	F
Approach Delay (s)	0.2			0.8			Err		6456.6	
Approach LOS							F		F	

Intersection Summary			
Average Delay	Err		
Intersection Capacity Utilization	78.2%	ICU Level of Service	D
Analysis Period (min)	15		

1: SR 53 & Etowah River Rd
J:\700\721-581\Analyses\Synchro\2030 pm with EBLR & WBLR & NBL & SBL.sy7

Movement	EBL	EBT	EBR	WBL	WBT	WBR	NBL	NBT	NBR	SBL	SBT	SBR
Lane Configurations												
Sign Control		Free			Free			Stop			Stop	
Grade		0%			0%			0%			0%	
Volume (veh/h)	40	890	80	90	1060	120	50	30	70	60	10	20
Peak Hour Factor	0.95	0.95	0.95	0.92	0.92	0.92	0.88	0.88	0.88	0.84	0.84	0.84
Hourly flow rate (vph)	42	937	84	98	1152	130	57	34	80	71	12	24
Pedestrians												
Lane Width (ft)												
Walking Speed (ft/s)												
Percent Blockage												
Right turn flare (veh)												
Median type								None			None	
Median storage veh)												
Upstream signal (ft)												
pX, platoon unblocked												
vC, conflicting volume	1283			1021			2399	2499	937	2465	2453	1152
vC1, stage 1 conf vol												
vC2, stage 2 conf vol												
vCu, unblocked vol	1283			1021			2399	2499	937	2465	2453	1152
tC, single (s)	4.2			4.1			7.1	6.5	6.2	7.2	6.5	6.2
tC, 2 stage (s)												
tF (s)	2.3			2.2			3.5	4.0	3.3	3.6	4.0	3.3
p0 queue free %	92			85			0	0	75	0	51	90
cM capacity (veh/h)	506			672			11	23	321	0	25	243

Direction, Lane #	EB 1	EB 2	EB 3	WB 1	WB 2	WB 3	NB 1	NB 2	SB 1	SB 2
Volume Total	42	937	84	98	1152	130	57	114	71	36
Volume Left	42	0	0	98	0	0	57	0	71	0
Volume Right	0	0	84	0	0	130	0	80	0	24
cSH	506	1700	1700	672	1700	1700	11	65	0	61
Volume to Capacity	0.08	0.55	0.05	0.15	0.68	0.08	5.13	1.74	Err	0.58
Queue Length 95th (ft)	7	0	0	13	0	0	Err	255	Err	60
Control Delay (s)	12.8	0.0	0.0	11.3	0.0	0.0	Err	491.2	Err	125.8
Lane LOS	B			B			F	F	F	F
Approach Delay (s)	0.5			0.8			3660.4		Err	
Approach LOS							F		F	

Intersection Summary			
Average Delay	Err		
Intersection Capacity Utilization	79.1%	ICU Level of Service	D
Analysis Period (min)	15		

1: SR 53 & Etowah River Rd
J:\700\721-581\Analyses\Synchro\2030 am with EBLR & WBLR & NBLR & SBLR.sy7

Movement	EBL	EBT	EBR	WBL	WBT	WBR	NBL	NBT	NBR	SBL	SBT	SBR
Lane Configurations												
Sign Control		Free			Free			Stop			Stop	
Grade		0%			0%			0%			0%	
Volume (veh/h)	20	1060	50	70	890	60	80	10	90	120	30	40
Peak Hour Factor	0.92	0.92	0.92	0.91	0.91	0.91	0.75	0.75	0.75	0.81	0.81	0.81
Hourly flow rate (vph)	22	1152	54	77	978	66	107	13	120	148	37	49
Pedestrians												
Lane Width (ft)												
Walking Speed (ft/s)												
Percent Blockage												
Right turn flare (veh)												
Median type								None			None	
Median storage veh)												
Upstream signal (ft)												
pX, platoon unblocked												
vC, conflicting volume	1044			1207			2395	2393	1152	2454	2382	978
vC1, stage 1 conf vol												
vC2, stage 2 conf vol												
vCu, unblocked vol	1044			1207			2395	2393	1152	2454	2382	978
tC, single (s)	4.1			4.1			7.1	6.5	6.2	7.2	6.5	6.3
tC, 2 stage (s)												
tF (s)	2.2			2.2			3.5	4.0	3.3	3.6	4.0	3.4
p0 queue free %	97			87			0	53	50	0	0	83
cM capacity (veh/h)	674			575			0	29	241	6	29	295

Direction, Lane #	EB 1	EB 2	EB 3	WB 1	WB 2	WB 3	NB 1	NB 2	NB 3	SB 1	SB 2	SB 3
Volume Total	22	1152	54	77	978	66	107	13	120	148	37	49
Volume Left	22	0	0	77	0	0	107	0	0	148	0	0
Volume Right	0	0	54	0	0	66	0	0	120	0	0	49
cSH	674	1700	1700	575	1700	1700	0	29	241	6	29	295
Volume to Capacity	0.03	0.68	0.03	0.13	0.58	0.04	Err	0.47	0.50	25.69	1.27	0.17
Queue Length 95th (ft)	2	0	0	12	0	0	Err	37	64	Err	106	15
Control Delay (s)	10.5	0.0	0.0	12.2	0.0	0.0	Err	212.3	34.0	Err	462.2	19.7
Lane LOS	B			B			F	F	D	F	F	C
Approach Delay (s)	0.2			0.8			Err			6392.3		
Approach LOS							F			F		

Intersection Summary			
Average Delay	Err		
Intersection Capacity Utilization	78.2%	ICU Level of Service	D
Analysis Period (min)	15		

1: SR 53 & Etowah River Rd
J:\700\721-581\Analyses\Synchro\2030 pm with EBLR & WBLR & NBLR & SBLR.sy7

Movement	EBL	EBT	EBR	WBL	WBT	WBR	NBL	NBT	NBR	SBL	SBT	SBR
Lane Configurations												
Sign Control		Free			Free			Stop			Stop	
Grade		0%			0%			0%			0%	
Volume (veh/h)	40	890	80	90	1060	120	50	30	70	60	10	20
Peak Hour Factor	0.95	0.95	0.95	0.92	0.92	0.92	0.88	0.88	0.88	0.84	0.84	0.84
Hourly flow rate (vph)	42	937	84	98	1152	130	57	34	80	71	12	24
Pedestrians												
Lane Width (ft)												
Walking Speed (ft/s)												
Percent Blockage												
Right turn flare (veh)												
Median type								None			None	
Median storage veh)												
Upstream signal (ft)												
pX, platoon unblocked												
vC, conflicting volume	1283			1021			2399	2499	937	2465	2453	1152
vC1, stage 1 conf vol												
vC2, stage 2 conf vol												
vCu, unblocked vol	1283			1021			2399	2499	937	2465	2453	1152
tC, single (s)	4.2			4.1			7.1	6.5	6.2	7.2	6.5	6.2
tC, 2 stage (s)												
tF (s)	2.3			2.2			3.5	4.0	3.3	3.6	4.0	3.3
p0 queue free %	92			85			0	0	75	0	51	90
cM capacity (veh/h)	506			672			11	23	321	0	25	243

Direction, Lane #	EB 1	EB 2	EB 3	WB 1	WB 2	WB 3	NB 1	NB 2	NB 3	SB 1	SB 2	SB 3
Volume Total	42	937	84	98	1152	130	57	34	80	71	12	24
Volume Left	42	0	0	98	0	0	57	0	0	71	0	0
Volume Right	0	0	84	0	0	130	0	0	80	0	0	24
cSH	506	1700	1700	672	1700	1700	11	23	321	0	25	243
Volume to Capacity	0.08	0.55	0.05	0.15	0.68	0.08	5.13	1.49	0.25	Err	0.49	0.10
Queue Length 95th (ft)	7	0	0	13	0	0	Err	109	24	Err	37	8
Control Delay (s)	12.8	0.0	0.0	11.3	0.0	0.0	Err	614.8	19.9	Err	249.4	21.4
Lane LOS	B			B			F	F	C	F	F	C
Approach Delay (s)	0.5			0.8			3465.2			Err		
Approach LOS							F			F		

Intersection Summary			
Average Delay	Err		
Intersection Capacity Utilization	79.1%	ICU Level of Service	D
Analysis Period (min)	15		

1: SR 53 & Etowah River Rd
J:\700\721-581\Analyses\Synchro\2030 am with signal & EBLR & WBLR.sy7

Movement	EBL	EBT	EBR	WBL	WBT	WBR	NBL	NBT	NBR	SBL	SBT	SBR
Lane Configurations												
Ideal Flow (vphpl)	1900	1900	1900	1900	1900	1900	1900	1900	1900	1900	1900	1900
Total Lost time (s)	4.0	4.0	4.0	4.0	4.0	4.0		4.0			4.0	
Lane Util. Factor	1.00	1.00	1.00	1.00	1.00	1.00		1.00			1.00	
Frt	1.00	1.00	0.85	1.00	1.00	0.85		0.93			0.97	
Flt Protected	0.95	1.00	1.00	0.95	1.00	1.00		0.98			0.97	
Satd. Flow (prot)	1805	1827	1455	1752	1776	1313		1716			1694	
Flt Permitted	0.15	1.00	1.00	0.07	1.00	1.00		0.77			0.63	
Satd. Flow (perm)	287	1827	1455	129	1776	1313		1354			1097	
Volume (vph)	20	1060	50	70	890	60	80	10	90	120	30	40
Peak-hour factor, PHF	0.92	0.92	0.92	0.91	0.91	0.91	0.75	0.75	0.75	0.81	0.81	0.81
Adj. Flow (vph)	22	1152	54	77	978	66	107	13	120	148	37	49
RTOR Reduction (vph)	0	0	18	0	0	22	0	40	0	0	11	0
Lane Group Flow (vph)	22	1152	36	77	978	44	0	200	0	0	223	0
Heavy Vehicles (%)	0%	4%	11%	3%	7%	23%	0%	0%	2%	6%	0%	9%
Turn Type	Perm		Perm	Perm		Perm	Perm			Perm		
Protected Phases		4			8			2			6	
Permitted Phases	4		4	8		8	2			6		
Actuated Green, G (s)	55.1	55.1	55.1	55.1	55.1	55.1		17.8			17.8	
Effective Green, g (s)	57.1	57.1	57.1	57.1	57.1	57.1		19.8			19.8	
Actuated g/C Ratio	0.67	0.67	0.67	0.67	0.67	0.67		0.23			0.23	
Clearance Time (s)	6.0	6.0	6.0	6.0	6.0	6.0		6.0			6.0	
Vehicle Extension (s)	3.0	3.0	3.0	3.0	3.0	3.0		3.0			3.0	
Lane Grp Cap (vph)	193	1229	979	87	1194	883		316			256	
v/s Ratio Prot		c0.63			0.55							
v/s Ratio Perm	0.08		0.02	0.60		0.03		0.15			c0.20	
v/c Ratio	0.11	0.94	0.04	0.89	0.82	0.05		0.63			0.87	
Uniform Delay, d1	4.9	12.3	4.7	11.2	10.1	4.7		29.3			31.3	
Progression Factor	1.00	1.00	1.00	1.00	1.00	1.00		1.00			1.00	
Incremental Delay, d2	0.3	13.2	0.0	59.7	4.5	0.0		4.1			26.1	
Delay (s)	5.2	25.6	4.7	71.0	14.6	4.7		33.4			57.5	
Level of Service	A	C	A	E	B	A		C			E	
Approach Delay (s)		24.3			17.9			33.4			57.5	
Approach LOS		C			B			C			E	

Intersection Summary			
HCM Average Control Delay	25.3	HCM Level of Service	C
HCM Volume to Capacity ratio	0.92		
Actuated Cycle Length (s)	84.9	Sum of lost time (s)	8.0
Intersection Capacity Utilization	80.7%	ICU Level of Service	D
Analysis Period (min)	15		

c Critical Lane Group

Movement	EBL	EBT	EBR	WBL	WBT	WBR	NBL	NBT	NBR	SBL	SBT	SBR
Lane Configurations												
Ideal Flow (vphpl)	1900	1900	1900	1900	1900	1900	1900	1900	1900	1900	1900	1900
Total Lost time (s)	4.0	4.0	4.0	4.0	4.0	4.0		4.0			4.0	
Lane Util. Factor	1.00	1.00	1.00	1.00	1.00	1.00		1.00			1.00	
Frt	1.00	1.00	0.85	1.00	1.00	0.85		0.94			0.97	
Flt Protected	0.95	1.00	1.00	0.95	1.00	1.00		0.98			0.97	
Satd. Flow (prot)	1597	1845	1524	1736	1827	1553		1735			1704	
Flt Permitted	0.08	1.00	1.00	0.20	1.00	1.00		0.87			0.65	
Satd. Flow (perm)	142	1845	1524	356	1827	1553		1541			1143	
Volume (vph)	40	890	80	90	1060	120	50	30	70	60	10	20
Peak-hour factor, PHF	0.95	0.95	0.95	0.92	0.92	0.92	0.88	0.88	0.88	0.84	0.84	0.84
Adj. Flow (vph)	42	937	84	98	1152	130	57	34	80	71	12	24
RTOR Reduction (vph)	0	0	26	0	0	40	0	41	0	0	14	0
Lane Group Flow (vph)	42	937	58	98	1152	90	0	130	0	0	93	0
Heavy Vehicles (%)	13%	3%	6%	4%	4%	4%	0%	0%	2%	7%	0%	0%
Turn Type	Perm		Perm	Perm		Perm	Perm			Perm		
Protected Phases		4			8			2			6	
Permitted Phases	4		4	8		8	2			6		
Actuated Green, G (s)	45.4	45.4	45.4	45.4	45.4	45.4		10.7			10.7	
Effective Green, g (s)	47.4	47.4	47.4	47.4	47.4	47.4		12.7			12.7	
Actuated g/C Ratio	0.70	0.70	0.70	0.70	0.70	0.70		0.19			0.19	
Clearance Time (s)	6.0	6.0	6.0	6.0	6.0	6.0		6.0			6.0	
Vehicle Extension (s)	3.0	3.0	3.0	3.0	3.0	3.0		3.0			3.0	
Lane Grp Cap (vph)	99	1284	1061	248	1272	1081		287			213	
v/s Ratio Prot		0.51			c0.63							
v/s Ratio Perm	0.30		0.04	0.28		0.06		c0.08			0.08	
v/c Ratio	0.42	0.73	0.06	0.40	0.91	0.08		0.45			0.44	
Uniform Delay, d1	4.5	6.4	3.3	4.3	8.5	3.3		24.6			24.5	
Progression Factor	1.00	1.00	1.00	1.00	1.00	1.00		1.00			1.00	
Incremental Delay, d2	2.9	2.1	0.0	1.0	9.4	0.0		1.1			1.4	
Delay (s)	7.4	8.5	3.3	5.4	17.9	3.4		25.7			26.0	
Level of Service	A	A	A	A	B	A		C			C	
Approach Delay (s)		8.1			15.6			25.7			26.0	
Approach LOS		A			B			C			C	

Intersection Summary			
HCM Average Control Delay	13.7	HCM Level of Service	B
HCM Volume to Capacity ratio	0.81		
Actuated Cycle Length (s)	68.1	Sum of lost time (s)	8.0
Intersection Capacity Utilization	78.6%	ICU Level of Service	D
Analysis Period (min)	15		

c Critical Lane Group

MEETING MINUTES

Mulkey Engineers & Consultants
1255 Canton Street, Suite G
Roswell, Georgia 30075
(678) 795-3611 Fax (678) 461-3494
e-mail: sgero@mulkeyinc.com

S.R. 53
Dawson County

File:

DATE: January 30, 2008 9:00 PM

SUBJECT: Pre-concept Meeting

LOCATION: District 1

ATTENDEES:

Shane Dover	GDOT
Robert Mahoney	GDOT
Joshua Orton	Heath and Lineback (Project Manager)
Thomas Barwick	Heath and Lineback (Project Principal)
Ken McDuff	Mulkey Eng. (Technical PM)

Meeting Agenda

(1) Project Scope. Ken began by giving a brief overview of the project:
- The Scope of the project is to add left and right turns on SR53 at Thompson/Etowah Roads.
- The scope also includes addressing the poor vertical sight distance issues just south of the intersection along SR53. The proposed project is to modify the profile to meet a 55 mph design speed.

(2) Environmental features (constraints)
- Avoid - Cemetery - Most likely the design will add a short gravity wall to avoid impacts to the cemetery.
- Northern project end SR53 at project tie- Avoid old gas station (now a glass shop) would most likely contain a UST. This site could become Historic within 10 years - should the project become delayed.
- House in south eastern quadrant of intersection is made of old wood but does not qualify to be historic
- Southern end SR53 – possible eligible historic (northern side of the road). The boundary will be further defined once the property lines are determined.
- Streams – Thompson Road
  a) Intermittent stream crossing Thompson about 300' to 400' west of the intersection. The existing outlet is crushed. Once survey is obtained in this area, it will be analyzed to determine if it can be avoided or if the impacts can be minimized. Currently this location has a deep ditch approximately 10' deep. The right turn lane could possibly be reduced or eliminated (with the signal)
  b) A stream crossing was noted on Thompson Road off of the project limits at the bottom of hill. This is of no effect to the project and will be eliminated from the concept report as an area of concern.

(3) Questions to District
- Two alternates for the intersection were presented, one with a signal and one with a stop condition. It was determined that with the left turns failing in the design year with a stop condition that a signal is to be placed in the plans for this location. The addition of a signal reduces the lanes required along Thompson Rd. and Etowah Rd.

Mulkey Engineers & Consultants
1255 Canton Street, Suite G
Roswell, Georgia 30075
(678) 795-3611 Fax (678) 461-3494
e-mail: sgero@mulkeyinc.com

S.R. 53
Dawson County

- Typical Section – The shoulder width was discussed. The shoulders to be used are to meet clear zone requirements. For the sections with turn lanes, it was noted that clear zone is to be measured from the EOP from the through lanes and the auxiliary lane can be part of the measurement for clear zone. The shoulder where no right turn occurs may need a barn roof shoulder.
- Staging – Ken asked if SR53 could be constructed with 1 lane open with a flagman or do they prefer additional temporary pavement to maintain traffic. Mr. Mahoney said they prefer additional temporary pavement to accommodate traffic. The cut that will be needed along SR53 to obtain adequate sight distance (3-4') cannot be accomplished short term within a day or so. Mr. Mahoney added that if possible, consideration should be given when placing additional paving for the temporary condition that it be placed in such a manner that it can be maintained permanently for a future build condition. An example to consider would be full depth shoulders placed to final grade and to minimize throw away pavement sections. When more detailed design data is obtained and coordinated with the survey data, the extent of what pavement can be retained vs. temporary pavement will be determined.
- Utilities. Ken asked what needs to be shown for reimbursable utilities. Mr. Mahoney stated that if the utility is on their own easement then it's a reimbursable cost. For the cost estimate for concept show utilities as non-reimbursable. Utilities will be further coordinated with District once plans develop.
- RW costs. RW costs are to be generated by setting an approximate proposed Required RW line and calculating an area. The estimated cost can be generated on a square foot basis. ($4 / sq ft? – to be verified) Once the cost is obtained, Mr. Mahoney will submit the estimate to District RW for review. Note that the existing RW line needs to be obtained (tax map, rough placement) It was suggested to contact Streetsmarts for verification of the square foot cost since they have done work in the area previously.

(4) General discussion

- On the concept report revise the following:
  a) under the section Environmental concerns – Streams list 1 jurisdictional intermittent stream (not 3 that is currently shown). Only count what is affected with the proposed project vs. what is in the area.
  b) Under the scheduling section – revise the time to complete the environmental process from 6 months to 9 months.
  c) Under the scheduling section – revise the time to complete the section 404 permit from not needed to 3 months (to account for the stream)
  d) under the section Coordination – Other projects in the area list APD00-0056-01(063) SR400 Interchange @ SR53/Corr A1 – Long Range
  e) Under the section Other alternates considered - the Roundabout option was discussed. It was stated that this option was investigated and then eliminated. Mr. Mahoney noted to add text stating that it is not justified to drastically reduce the open highway situation to accommodate a roundabout. The max operating speed of a roundabout is 25 mph (20-25 within the roundabout).

Mulkey Engineers & Consultants
1255 Canton Street, Suite G
Roswell, Georgia 30075
(678) 795-3611 Fax (678) 461-3494
e-mail: sgero@mulkeyinc.com

S.R. 53
Dawson County

- Consider relocating the driveway into the Chestatee Emergent Medical Center from its existing access location on Thompson Road to providing an access on SR53. Consideration to be given to sight distance, and ingress and egress movements.
- Detours. It may be necessary to temporarily detour Thompson Road during construction for a short time. Thompson has an alternate access (Thompson to Hugh Stowers Road to Grizzle Road to GA400). It is desirable to avoid the detour if possible and accomplish through onsite staging)
- A wall may possibly be needed along SR53 in the southern quadrant of the intersection in addition to the one needed at the cemetery.

(5) Time Frame/Schedule

- Need to schedule concept meeting ASAP
- Ken to complete minutes and revise the concept and return ASAP in order to schedule the meeting. District needs 2 weeks to schedule the meeting once the report is obtained.
- Tentatively target Feb 15, 2008 to hold the concept meeting 1:30 to 3:00.
- Target PFPR end of July 2008

NOTICE OF LOCATION AND DESIGN APPROVAL

PROJECT STP00-0001-00(769) Dawson County
P.I. NO. 0001769

Notice is hereby given in compliance with Georgia Code 22-2-109 that the Georgia Department of Transportation has approved the Location and Design of this project.

The date of location approval is _____.

The proposed project is located 3 miles northwest of GA 400 in Dawson County in land lots 113, 114, 127, and 128. The project is located at MP 12.89 along SR 53. The termini of the intersection improvement project were established based on the most appropriate tie-ins of the proposed roadway. The proposed project length is approximately 0.5 miles.

The project proposes to make improvements that would include the addition of right and left turn lanes on all quadrants of the intersection, modifying the profile in order to improve sight distance, and adding a signal to the intersection. The project would improve safety and efficiency of the intersection at SR 53 at Etowah River Road/Thompson Road.

Drawings or maps or plats of the proposed project, as approved, are on file and are available for public inspection at the Georgia Department of Transportation:

Hiral Patel, District 1, Area 1 Engineer
hpatel@dot.ga.gov
2594 Gillsville Highway
Gainesville, GA 30507
(770) 535-5759

Any interested party may obtain a copy of the drawings or maps or plats or portions thereof by paying a nominal fee and requesting in writing to:

Hiral Patel, District 1, Area 1 Engineer
hpatel@dot.ga.gov
2594 Gillsville Highway
Gainesville, GA 30507
(770) 535-5759

Any written request or communication in reference to this project SHOULD include the Project and P.I. Numbers as noted at the top of this notice.

Benefit Cost Analysis Work Sheet
CONGESTION Projects

PROJECT NUMBER: STP00-0001-00(769)
PI NUMBER: 0001769
Dawson Co

SR 53 & Thompson Mill Rd

Congestion Benefit = Tb + CMb + Fb

Person Time Savings Benefit (Tb)

*Db (hrs)	0.002777778
ADT	27,400
Tb ($s)	$2,616,319.44

Commercial or Truck Time Savings Benefit (CMb)

Db (hrs)	0.002777778
% Truck Traffic	0.18
ADT	27,400
CMb	$2,488,262.50

Fuel Savings Benefit (Fb)

ADT	27,400
Fb ($s)	$911,747.69

Total Congestion Benefit	**$6,016,329.63**
Total Project Cost	**$2,592,207.00**
B/C Ratio	**2.32**

*Reduction in delay or **Delay Benefit (D_b)** can be defined as the difference between the peak hour travel time through the corridor without the proposed improvement and the peak hour travel time through the corridor with the proposed improvement.