ORIGINAL TO GENERAL FILES

DEPARTMENT OF TRANSPORTATION
STATE OF GEORGIA

OFFICE OF DESIGN POLICY & SUPPORT
INTERDEPARTMENTAL CORRESPONDENCE

FILE P.I. #0000408
STP00-0000-00(408)
GDOT District 3 - Thomaston
Spalding County
Widening & operational improvements along SR 16/Newnan Road, CR 35/Vaughn Road and CR 507/Rover Zetella Road, near Zetella

OFFICE Design Policy & Support

DATE February 8, 2011

FROM for Brent Story, State Design Policy Engineer

TO SEE DISTRIBUTION

SUBJECT **APPROVED REVISED CONCEPT REPORT**

Attached is the approved Revised Concept Report for the above subject project.

Attachment

DISTRIBUTION:

Genetha Rice-Singleton, Program Control Administrator
Ron Wishon, State Project Review Engineer
Glenn Bowman, State Environmental Administrator
Ken Thompson, Statewide Location Bureau Chief
Kathy Zahul, State Traffic Engineer
Cindy VanDyke, State Transportation Planning Administrator
Bobby Hilliard, State Program Delivery Engineer
Georgene Geary, State Materials & Research Engineer
Angela Robinson, Financial Management Administrator
Jeff Baker, State Utilities Engineer
Kerry Gore, District Utilities Engineer
Bill Rountree, District Preconstruction Engineer
David Millen, District Engineer
Nesbitt, Kimberly, Project Manager
BOARD MEMBER - 3rd Congressional District

DEPARTMENT OF TRANSPORTATION
STATE OF GEORGIA

REVISED PROJECT CONCEPT REPORT

Project Number: STP00-0000-00(408)
County: SPALDING
P. I. Number: 0000408
Federal Route Number: N/A
State Route Number: SR 16

Typical sections were updated to reflect current department guidelines of 10' shoulders (6.5' paved) for rural arterials and 8' (4' paved) for rural collectors. Project termini have changed. Max grade and max degree of curve were revised to reflect current AASHTO design minimums and the functional class of SR 16 has changed since the concept report was first approved.

Submitted for approval:

DATE 11/2/2010 — State Roadway Design Engineer

DATE 11/3/10 — State Program Delivery Engineer

DATE 11/3/2010 — Project Manager

Recommendation for approval:

DATE 1-25-2011 — Glenn Bowman (MHB) *on file
State Environmental Administrator

The concept as presented herein and submitted for approval is consistent with that which is included in the Regional Transportation Program (RTP) and/or the State Transportation Improvement Program (STIP).

DATE 1-28-11 — State Transportation Planning Administrator

REVISED PROJECT CONCEPT REPORT

Revised Project Concept Report – Page 1:
P.I. Number: 0000408
County: Spalding

Need and Purpose: The need for P.I. number 0000408 is evidenced through historic crash rates on SR 16 that exceed the statewide average on a consistent basis as shown in the below table. The purpose of this intersection improvement project at SR 16 and CR 35 & CR 507 is to reduce these crash rates and subsequently improve traffic operations at this location. The project consists of the addition of a stop and go traffic signal, left turn lanes, and improvements to sight distance.

Crash Rates:

Year	Crash Count	Crash Rate	State Wide Average Crash Rate	Injury Count	Injury Rate	State Wide Average Injury rate	Fatality Count	Fatality Rate	State Wide Average Fatality Rate
2006	11	841	197	9	688	110	0	0	2.95
2007	13	964	194	8	593	106	0	0	2.76
2008	4	297	186	0	0	100	0	0	2.65
2009	6	459	*	9	688	*	0	0	*

State-wide averages are for Minor Arterial, NON-NHS, rural
*2009 State Averages are not available

There was a drop in crash rates in 2008 and 2009; but in 2008 the crash rate still exceeded the state-wide average for this type of facility. No geometry or traffic pattern changes could be documented to explain the reduction.

Project location: The intersection of SR 16 at CR 35 & CR 507 is approximately six miles west of the city of Griffin, in Spalding County, and three miles north of the Pike County line. The project begins at SR 16/Newnan Road mile post 6.84 and ends at SR 16/Newnan Road mile post 7.29.

Description of the approved concept: SR 16 will be widened 6 feet symmetrically to provide for left turn lanes in each direction. A crest vertical curve on SR 16 east of the intersection will be lowered to improve sight distance. CR 35 and CR 507 will be widened 6 feet symmetrically to provide left turn lanes in each direction. A stop and go traffic signal with pedestrian crosswalks will be installed at the intersection.

PDP Classification: Major _____ Minor ___X___
Federal Oversight: Full Oversight ( ), Exempt (X), State Funded ( ), or Other ( )

Functional Classification:
SR 16/Newnan Road – Rural Minor Arterial
CR 35/Vaughn Road – Rural Major Collector
CR 507/Rover Zetella Road – Rural Major Collector

Revised Project Concept Report – Page 2:
P.I. Number: 0000408
County: Spalding
U. S. Route Number(s): N/A **State Route Number(s): SR 16**

Traffic (AADT) as shown in the approved concept:
Base Year: 7200(2001) Design Year: not given

Updated traffic data (AADT):
Base Year: 9000 (2014) Design Year: 14500 (2034)

Approved Programmed/Schedule:
P.E. 2003 R/W: Lump Construction: Lump

VE Study Required Yes ( ) No (X)
Benefit/Cost Ratio N/A

Is the project located in an Ozone Non-attainment area? Yes (X) No ( )
Is the project in a PM2.5 Non-Attainment area? Yes (X) No ( )
This project is an operational improvement project. SR 16/Newnan Road, CR 35/Vaughn Road, and CR 507/Rover Zetella Road have two thru lanes (one lane in each direction) in the before and after condition. Because of this, the network schematic for conforming lanes is not included with this report.

Approved Features:	**Proposed Features:**
Typical Section: SR 16: 2-12 ft. travel lanes, one in each direction with 12 ft. left and right-turn lanes in each direction. Shoulders will be 10.5 ft., 6.5 ft paved and 4 ft. grassed CR 35: 2-12 ft. travel lanes, one in each direction with a 12 ft. left turn lane southbound. Shoulders will be 10 ft., 4 ft. paved and 6 ft. grassed. CR 507: 2-12 ft. travel lanes, one in each direction with a 12 ft. left turn lane northbound. Shoulders will be 10 ft., 4 ft. paved and 6 ft. grassed. Project Termini: Begin 6.75 End 7.08 Controlling Criteria: Max Grade SR 16/Newnan Rd 3% Max Degree of Curve SR 16 +/- 0° Functional Class: SR 16 Rural Principal Arterial	Typical Section: SR 16: 2-12 ft travel lanes, one in each direction with 12 ft left and right turn lanes in each direction. Shoulders will be 10 ft, 6.5 ft paved, 3.5 ft grassed. CR 35: 2-12 ft travel lanes, one in each direction with 12 ft left and right turn lanes southbound. Shoulders will be 8 ft, 4 ft paved and 4 ft grassed. CR 507: 2-12 ft travel lanes, one in each direction with 12 ft left and right turn lanes northbound. Shoulders will be 8 ft, 4 ft paved and 4 ft grassed. Project Termini: Begin 6.84 End 7.29 Controlling Criteria: Max Grade SR 16/Newnan Rd 5% Max Degree of Curve SR 16 +/- 5°30' Functional Class: SR 16 Rural Minor Arterial

Revised Project Concept Report – Page 3:
P.I. Number: 0000408
County: Spalding

Reason for Change:
The typical section has been changed to reflect current design guidelines of 10 foot shoulders (6.5' paved) on rural arterials and 8 foot shoulders (4' paved) on rural collectors. Right and left turn lanes will be provided on all approaches to improve level of service. Project termini were revised. The begin project termini was moved to avoid impacting a lake buffer and the end project termini was revised to reflect needed sight distance improvements on crest vertical curve just after the intersection. The max grade and max degree of curve were revised to show AASHTO design minimums and the functional class of SR 16 was updated to reflect current classification.

Updated Cost Estimate	
Construction including Engineering and Inspection	$1,195,500
Fuel Adjustment	$346,037.71
Right-of-Way	$3,039,800
Utilities (reimbursable)	$780,850 (LOCAL)
Utility Contingencies	$0
Environmental Mitigation	$0

Recommendation: It is recommended that the proposed revision to the concept be approved for implementation.

Attachments:

1. Sketch Map
2. Typical Sections
3. Updated Cost Estimates
4. 2014/2034 Traffic Diagram

Concur: _____
Director of Engineering

Approve: _____ Date: 2/11/2014
Chief Engineer

REVISED PROJECT CONCEPT REPORT
P. I. Number: 0000408
Project Number: STP00-0000-00(408)
County: Spalding

SITE LOCATION MAP

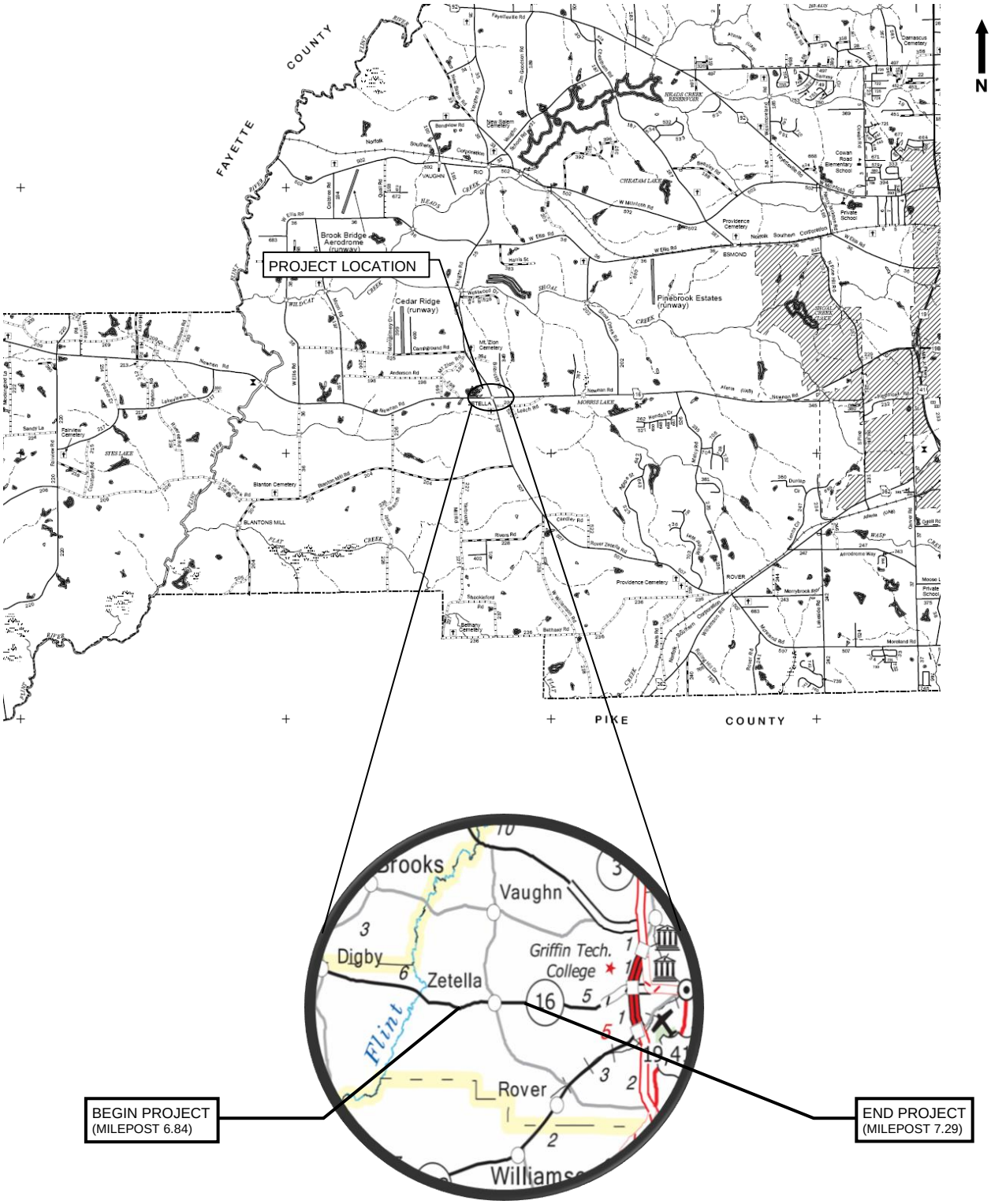

SLOPE CONTROLS		
SLOPE	CUT	FILL
4:1	——	0-10'
2:1	ALL	OVER 10'

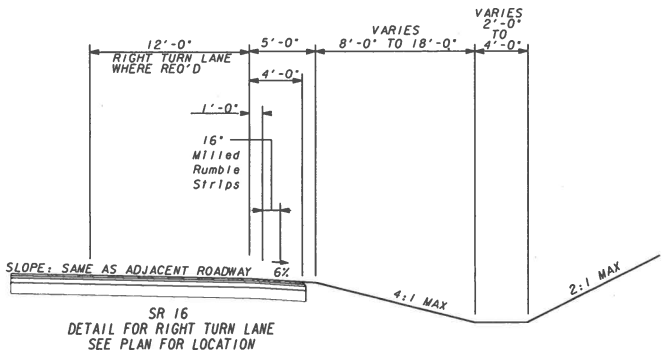

SR 16
DETAIL FOR RIGHT TURN LANE
SEE PLAN FOR LOCATION

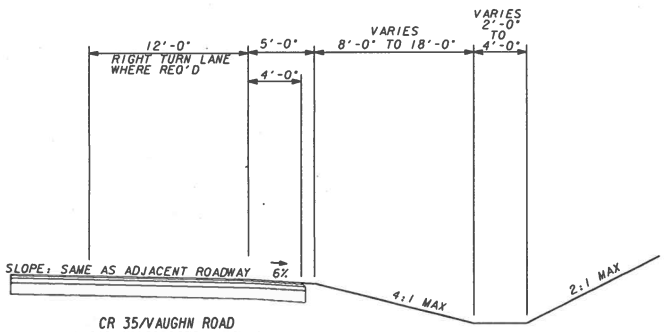

CR 35/VAUGHN ROAD
CR 507/ROVER ZETELLA ROAD
DETAIL FOR RIGHT TURN LANE
SEE PLAN FOR LOCATION

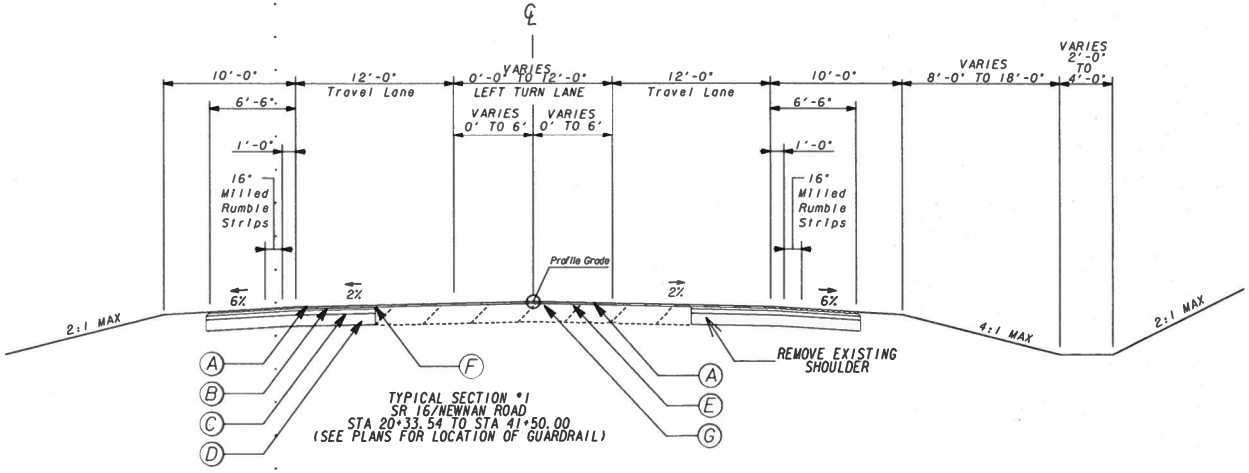

TYPICAL SECTION #1
SR 16/NEWNAN ROAD
STA 20+33.54 TO STA 41+50.00
(SEE PLANS FOR LOCATION OF GUARDRAIL)

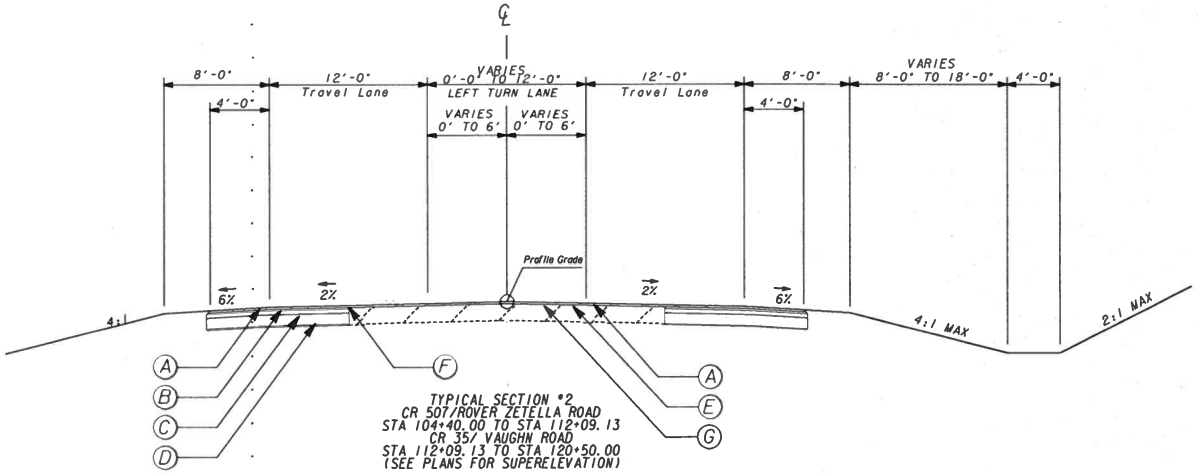

TYPICAL SECTION #2
CR 507/ROVER ZETELLA ROAD
STA 104+40.00 TO STA 112+09.13
CR 35/ VAUGHN ROAD
STA 112+09.13 TO STA 120+50.00
(SEE PLANS FOR SUPERELEVATION)

REQUIRED PAVEMENT

- (A) RECYCLED ASPHALTIC CONCRETE 12.5 mm SUPERPAVE, 165 LBS./SQ. YD.
- (B) RECYCLED ASPHALTIC CONCRETE 19.0 mm SUPERPAVE, 220 LBS./SQ. YD.
- (C) RECYCLED ASPHALTIC CONCRETE 25.0 mm SUPERPAVE, 550 LBS./SQ. YD.
- (D) GRADED AGGREGATE BASE, 12"
- (E) ASPHALTIC CONCRETE LEVELING, AS REQ'D
- (F) PAVEMENT REINFORCING FABRIC
- (G) MILL ASPH CONCRETE, VARIABLE DEPTH

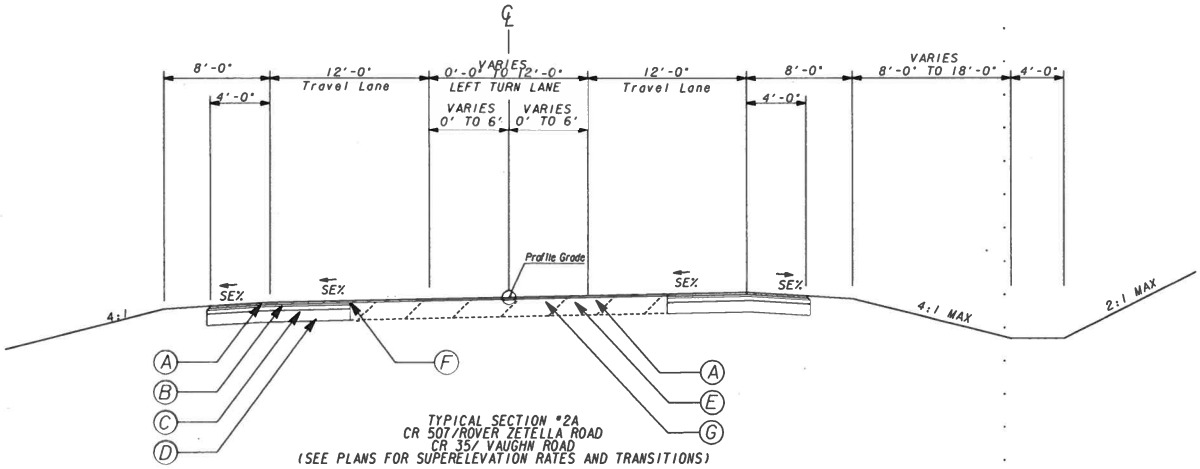

TYPICAL SECTION #2A
CR 507/ROVER ZETELLA ROAD
CR 35/ VAUGHN ROAD
(SEE PLANS FOR SUPERELEVATION RATES AND TRANSITIONS)

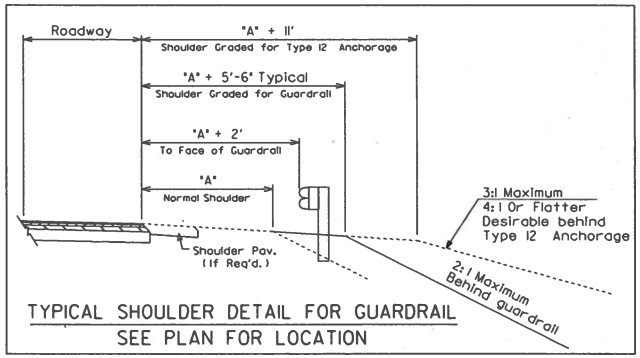

TYPICAL SHOULDER DETAIL FOR GUARDRAIL
SEE PLAN FOR LOCATION

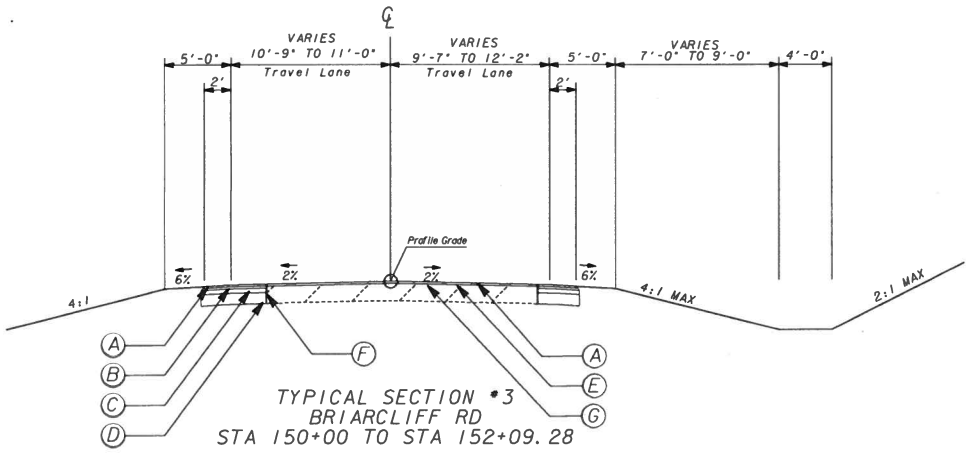

TYPICAL SECTION #3
BRIARCLIFF RD
STA 150+00 TO STA 152+09.28

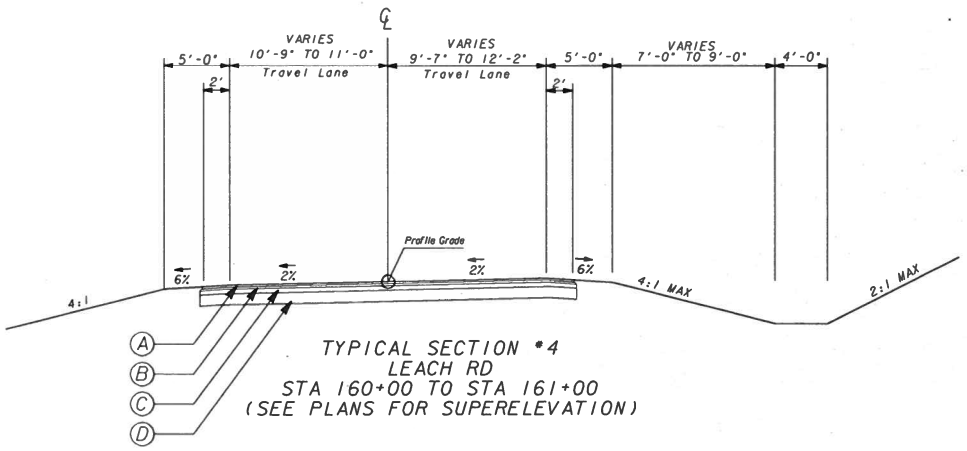

TYPICAL SECTION #4
LEACH RD
STA 160+00 TO STA 161+00
(SEE PLANS FOR SUPERELEVATION)

REQUIRED PAVEMENT

Ⓐ RECYCLED ASPHALTIC CONCRETE 12.5 mm SUPERPAVE, 165 LBS./SQ. YD.
Ⓑ RECYCLED ASPHALTIC CONCRETE 19.0 mm SUPERPAVE, 220 LBS./SQ. YD.
Ⓒ RECYCLED ASPHALTIC CONCRETE 25.0 mm SUPERPAVE, 550 LBS./SQ. YD.
Ⓓ GRADED AGGREGATE BASE, 12"
Ⓔ ASPHALTIC CONCRETE LEVELING, AS REQ'D
Ⓕ PAVEMENT REINFORCING FABRIC
Ⓖ MILL ASPH CONCRETE, VARIABLE DEPTH

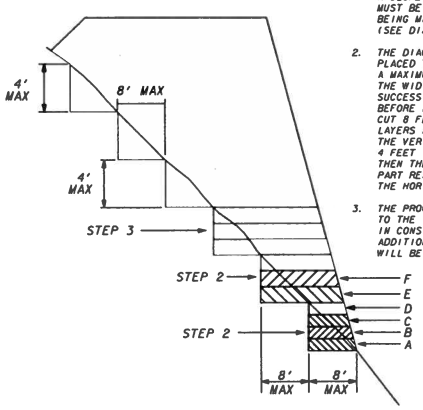

1. WHERE THE EMBANKMENT IS TO BE PLACED ON A HILLSIDE OR ANOTHER EXISTING EMBANKMENT HAVING A SLOPE OF 3 TO 1 OR STEEPER. THE FOUNDATION MUST BE BENCHED WHILE THE EMBANKMENT IS BEING MADE. (SEE DIAGRAM AT LEFT)

2. THE DIAGRAM SHOWS THAT BEFORE LAYER "A" IS PLACED THE FIRST STEP (1) IS CUT INTO THE SLOPE A MAXIMUM DISTANCE OF ABOUT 8 FEET (ABOUT ⅔ THE WIDTH OF THE TYPICAL D-8 BULLDOZER BLADE). SUCCESSIVE LAYERS B, C, AND D ARE THEN PLACED BEFORE LAYER "E" IS PLACED. THE SECOND STEP IS CUT 8 FEET INTO THE SLOPE AND SUCCESSIVE LAYERS ARE AGAIN PLACED. IF IT IS ANTICIPATED THAT THE VERTICAL PART OF THE STEP WILL EXCEED 4 FEET IF A 8 FEET HORIZONTAL CUT IS MADE, THEN THE ACTUAL CUT STOPS WHEN THE VERTICAL PART REACHES A MAXIMUM OF 4 FEET ALLOWING THE HORIZONTAL DISTANCE TO VARY.

3. THE PROCESS OF BENCHING IS CONSIDERED INCIDENTAL TO THE ITEM OF UNCLASSIFIED EXCAVATION AND BORROW IN CONSTRUCTION OF THE EMBANKMENT AND NO ADDITIONAL MEASUREMENT OF QUANTITY OR PAYMENT WILL BE MADE FOR BENCHING.

BENCHING DETAIL

NOT TO SCALE

TYPICAL SECTION DETAIL TO BE USED WHEN EXISTING PAVEMENT IS TO BE RESURFACED WITH TWO INCHES OR MORE OF ASPHALTIC CONCRETE

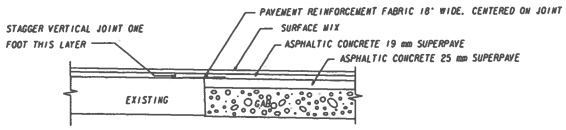

TYPICAL SECTION DETAIL TO BE USED WHEN EXISTING PAVEMENT IS TO BE RESURFACED WITH LESS THAN TWO INCHES OF ASPHALTIC CONCRETE

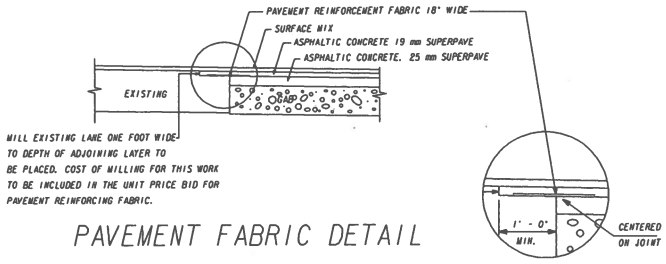

PAVEMENT FABRIC DETAIL

ALLOWABLE RANGES TABLE

FOR THIS PROJECT, CROSS SLOPES THAT ARE ADJUSTED TO "BEST FIT" EXISTING PAVEMENT SLOPES ARE SUBJECT TO THE FOLLOWING LIMITS:

A. NORMAL CROWN

SECTION WITH GRADES 0.5% OR GREATER	SECTION WITH GRADES LESS THAN 0.5%
0.0150 FT/FT - MINIMUM	0.0156 FT/FT - MINIMUM
0.0208 FT/FT - DESIRABLE	0.0208 FT/FT - DESIRABLE
0.0250 FT/FT - MAXIMUM	0.0300 FT/FT - MAXIMUM

B. SUPERELEVATION RATE

S.E. RATE SHOWN ON PLANS OR SE RATE EXISTING IN FIELD, WHICHEVER IS GREATER.

C. SUPERELEVATION TRANSITION LENGTH (LENGTH FROM FLAT POINT TO FULL SE)

	RATE OF CHANGE	CORRESPONDING DIFFERENCE IN GRADE BETWEEN PIVOT POINT AND EDGE OF PAVEMENT
MINIMUM	1:150	0.67%
DESIRABLE	1:200	0.50%
MAXIMUM	1:300	0.33%

LENGTH SHALL BE SET TO AVOID CREATING A FLAT GUTTER GRADE ON LOW SIDE AND TO AVOID FLAT CROSS SLOPES AT OR NEAR THE LOW POINT OF VERTICAL CURVES.

D. POSITIONING OF SUPERELEVATION TRANSITION LENGTH ON SIMPLE CURVES

50% OF TRANSITION INSIDE CURVE - MAXIMUM
33% OF TRANSITION INSIDE CURVE - DESIRABLE
20% OF TRANSITION INSIDE CURVE - MINIMUM

NOTE: CROWN WIPE-OUT SHALL BE AT THE SAME RATE AS THE SE TRANSITION.

E. SMOOTHING OF BREAKS IN EDGE PROFILE AT BEGIN AND END OF TRANSITION SHALL BE ACCOMPLISHED BY VERTICAL CURVE WITH A MINIMUM LENGTH (IN FEET) EQUAL TO THE SPEED DESIGN (IN MPH).

SHEET 1 OF 1

GEORGIA DEPARTMENT OF TRANSPORTATION
OFFICE OF PLANNING

SPALDING COUNTY

N

2034 ADT = (000)
2014 ADT = 000

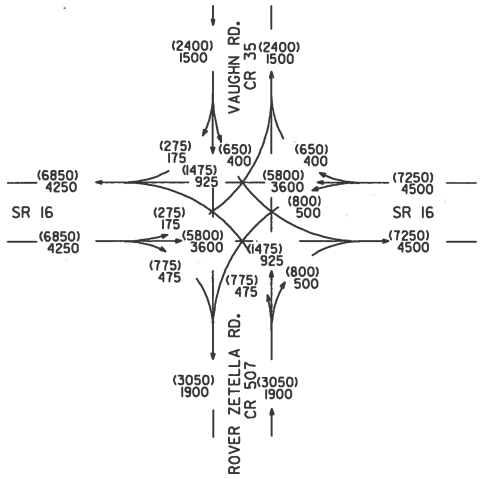

2034 PM DHV = (000)
2034 AM DHV = 000

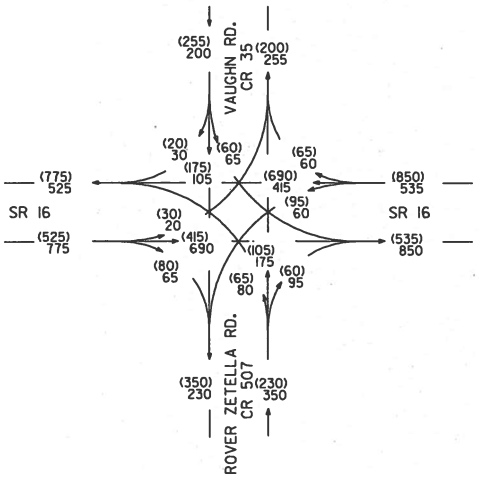

STP-0000-00(408)
P.I.# 0000408
SPALDING COUNTY

SR 16 @ CR 35/507

T = 10%
24 HR. T = 14 %
S.U. = 8%
COMB. = 6%

AFE
08/10

DEPARTMENT OF TRANSPORTATION
STATE OF GEORGIA

INTERDEPARTMENT CORRESPONDENCE

FILE PROJECT No. STP00-0000-00(408), Spalding County
SR 16 @ cr 35/Vaughn Rd & CR 507/Rover Rd
P.I. No. 0000408

OFFICE Roadway Design

DATE 10/26/2010

FROM Bobby Hiliard, P.E., State Program Delivery Engineer

TO Ronald E. Wishon, Project Review Engineer

SUBJECT REVISIONS TO PROGRAMMED COSTS

PROJECT MANAGER Kim Nesbitt

MNGT LET DATE 12/15/2012

MNGT R/W DATE 6/15/2011

PROGRAMMED COST (TPro W/OUT INFLATION)		**LAST ESTIMATE UPDATE**
CONSTRUCTION	$2,112,334.00	DATE 6/20/2008
RIGHT OF WAY	$3,382,000.00	DATE 2/18/2005

REVISED COST ESTIMATES

CONSTRUCTION*	$ 1,600,259.41
RIGHT OF WAY	$ 3,039,800.00
UTILITIES**	$ 780,850.00 (LOCAL)

* Costs contain 5% Engineering and Inspection, 0% Construction Contingencies, and Fuel and Liquid AC Adjustments.

** Costs contain 0% contingency.

REASON FOR COST INCREASE Preliminary Field Plan Review cost estimate.

CONTINGENCY SUMMARY

Construction Cost Estimate: $ 1,194,445.32 (Base Estimate)

Engineering and Inspection:	$ 59,722.27	(Base Estimate x 5 %)
Construction Contingency:	$ 0.00	(Base Estimate x 0 %) (The Construction Contingency is based on the Project Improvement Type in TPro.)
Total Fuel Adjustment	$ 113,347.71	(From attached worksheet)
Total Liquid AC Adjustment	$ 232,690.00	(From attached worksheet)
Construction Total:	$ 1,600,205.30	
Utility Cost Estimate:	$ 780,850.00 (LOCAL)	
Utility Contingency:	$ 0.00	0 %
Utility Total:	$ 780,850.00 (LOCAL)	

REIMBURSABLE UTILITY COST

Utility Owner	Reimbursable Costs
BellSouth d/b/a AT&T Georgia	$345,000
Central Georgia EMC	$148,350
Georgia Power (Distribution)	$115,000
Georgia Power (Transmission)	$172,500

Attachments

DATE : 10/26/2010
PAGE : 1

JOB DETAIL ESTIMATE

JOB NUMBER : 0000408 SPEC YEAR: 01
DESCRIPTION: SR 16 AT CR 35/VAUGHN AND CR 507/ROVER RD.-TURN LANES

ITEMS FOR JOB 0000408

LINE	ITEM	ALT	UNITS	DESCRIPTION	QUANTITY	PRICE	AMOUNT
0005	150-1000		LS	TRAFFIC CONTROL - STP00-0000-00(408)	1.000	50000.00	50000.00
0010	210-0100		LS	GRADING COMPLETE - STP00-0000-00(408)	1.000	50000.00	50000.00
0015	310-1101		TN	GR AGGR BASE CRS, INCL MATL	7100.000	16.30	115777.57
0020	318-3000		TN	AGGR SURF CRS	216.000	21.73	4694.32
0025	402-1812		TN	RECYL AC LEVELING,INC BM&HL	2785.000	62.11	173001.83
0030	402-3121		TN	RECYL AC 25MM SP,GP1/2,BM&HL	2770.000	58.88	163110.12
0035	402-3130		TN	RECYL AC 12.5MM SP,GP2,BM&HL	1730.000	67.38	116575.60
0040	402-3190		TN	RECYL AC 19 MM SP,GP 1 OR 2 ,INC BM&HL	1200.000	67.17	80610.28
0045	413-1000		GL	BITUM TACK COAT	1550.000	2.28	3539.55
0050	432-5010		SY	MILL ASPH CONC PVMT,VARB DEPTH	10050.000	2.26	22732.80
0055	441-0014		SY	DRIVEWAY CONCRETE, 4 IN TK	151.000	24.33	3674.33
0060	444-1000		LF	SAWED JTS IN EXIST PVMTS - PCC	22.000	4.11	90.47
0065	446-1100		LF	PVMT REF FAB STRIPS, TP2,18 INCH WIDTH	7370.000	2.66	19674.44
0070	456-2015		GLM	INDENT. RUMB. STRIPS - GRND-IN-PL (SKIP)	1.000	1055.54	1055.55
0075	550-1180		LF	STM DR PIPE 18",H 1-10	305.000	28.54	8706.67
0080	550-1240		LF	STM DR PIPE 24",H 1-10	279.000	35.96	10035.35
0085	550-1300		LF	STM DR PIPE 30",H 1-10	87.000	47.05	4093.57
0090	550-2180		LF	SIDE DR PIPE 18",H 1-10	424.000	23.16	9823.22
0095	550-3318		EA	SAFETY END SECTION 18",STD,4:1	3.000	483.98	1451.95
0100	550-3324		EA	SAFETY END SECTION 24",STD,4:1	2.000	837.29	1674.58
0105	550-3330		EA	SAFETY END SECTION 30",STD,4:1	2.000	1654.64	3309.29
0110	550-3418		EA	SAFETY END SECTION 18",SD,4:1	20.000	527.84	10556.80
0115	550-4218		EA	FLARED END SECT 18 IN, ST DR	3.000	396.48	1189.46
0120	550-4224		EA	FLARED END SECT 24 IN, ST DR	2.000	497.22	994.45
0125	634-1200		EA	RIGHT OF WAY MARKERS	78.000	89.45	6977.28
0130	641-1200		LF	GUARDRAIL, TP W	1225.000	15.54	19044.02
0135	641-5001		EA	GUARDRAIL ANCHORAGE, TP 1	2.000	614.12	1228.24
0140	641-5012		EA	GUARDRAIL ANCHORAGE, TP 12	2.000	1786.25	3572.52
0145	643-8200		LF	BARRIER FENCE (ORANGE), 4 FT	265.000	3.99	1059.93
0150	167-1000		EA	WATER QUALITY MONITORING AND SAMPLING	2.000	331.91	663.82
0155	167-1500		MO	WATER QUALITY INSPECTIONS	14.000	403.31	5646.40
0160	603-2024		SY	STN DUMPED RIP RAP, TP 1, 24"	85.000	43.28	3679.33
0165	603-7000		SY	PLASTIC FILTER FABRIC	85.000	4.47	380.31
0170	700-6910		AC	PERMANENT GRASSING	8.000	401.21	3209.74
0175	700-7000		TN	AGRICULTURAL LIME	30.000	39.44	1183.40
0180	700-7010		GL	LIQUID LIME	25.000	19.78	494.74
0185	700-8000		TN	FERTILIZER MIXED GRADE	7.000	404.88	2834.18
0190	700-8100		LB	FERTILIZER NITROGEN CONTENT	500.000	1.75	879.74
0195	710-9000		SY	PERM SOIL REINFORCING MAT	2531.000	3.94	9995.45
0200	716-2000		SY	EROSION CONTROL MATS, SLOPES	9330.000	0.84	7909.79
0205	163-0232		AC	TEMPORARY GRASSING	4.000	40.97	163.90
0210	163-0240		TN	MULCH	131.000	189.29	24798.04

JOB DETAIL ESTIMATE

0215	163-0300	EA	CONSTRUCTION EXIT	3.000	1118.35	3355.07
0220	163-0503	EA	CONSTR AND REMOVE SILT CONTROL GATE,TP 3	18.000	329.87	5937.71
0225	163-0520	LF	CONSTR AND REMOVE TEMP PIPE SLOPE DRAIN	500.000	12.74	6373.81
0230	163-0527	EA	CNST/REM RIP RAP CKDM,STN P RIPRAP/SN BG	26.000	210.08	5462.24
0235	163-0528	LF	CONSTR AND REM FAB CK DAM -TP C SLT FN	964.000	3.74	3606.54
0240	163-0542	EA	CONSTR & REM STONE FILTER RING	12.000	352.59	4231.19
0245	165-0010	LF	MAINT OF TEMP SILT FENCE, TP A	985.000	1.04	1027.56
0250	165-0030	LF	MAINT OF TEMP SILT FENCE, TP C	4275.000	0.57	2475.61
0255	165-0041	LF	MAINT OF CHECK DAMS - ALL TYPES	1214.000	0.90	1104.52
0260	165-0087	EA	MAINT OF SILT CONTROL GATE, TP 3	18.000	74.87	1347.74
0265	165-0101	EA	MAINT OF CONST EXIT	3.000	299.07	897.22
0270	165-0111	EA	MAINT OF STONE FILTER RING	12.000	149.93	1799.23
0275	171-0010	LF	TEMPORARY SILT FENCE, TYPE A	1965.000	2.48	4892.83
0280	171-0030	LF	TEMPORARY SILT FENCE, TYPE C	8550.000	2.93	25126.57
0285	647-1000	LS	TRAF SIGNAL INSTALLATION NO - 1-0000408	1.000	100000.00	100000.00
0290	639-3004	EA	STEEL STRAIN POLE, TP IV	4.000	12284.80	49139.21
0295	653-0120	EA	THERM PVMT MARK, ARROW, TP 2	26.000	68.86	1790.48
0300	653-6004	SY	THERM TRAF STRIPING, WHITE	153.000	3.00	460.20
0305	653-6006	SY	THERM TRAF STRIPING, YELLOW	1284.000	2.77	3558.21
0310	653-1501	LF	THERMO SOLID TRAF ST 5 IN, WHI	9925.000	0.28	2830.31
0315	653-1502	LF	THERMO SOLID TRAF ST, 5 IN YEL	4100.000	0.36	1482.56
0320	653-1704	LF	THERM SOLID TRAF STRIPE,24",WH	272.000	4.10	1117.25
0325	653-1804	LF	THERM SOLID TRAF STRIPE, 8",WH	1020.000	1.76	1797.97
0330	653-3501	GLF	THERMO SKIP TRAF ST, 5 IN, WHI	855.000	0.26	227.09
0335	654-1001	EA	RAISED PVMT MARKERS TP 1	260.000	3.23	841.78
0340	654-1003	EA	RAISED PVMT MARKERS TP 3	115.000	2.97	342.10
0345	636-1029	SF	HWY SGN,TP2 MATL,REFL SH TP 3	320.000	13.37	4278.88
0350	636-2080	LF	GALV STEEL POSTS, TP 8	416.000	9.30	3872.84
0355	441-0740	SY	CONC MEDIAN, 4 IN	53.000	16.70	885.61
0360	441-0104	SY	CONC SIDEWALK, 4 IN	75.000	54.53	4089.96

ITEM TOTAL 1194445.31
INFLATED ITEM TOTAL 1194445.31

TOTALS FOR JOB 0000408

ESTIMATED COST: 1194445.32
CONTINGENCY PERCENT (0.0): 0.00
ESTIMATED TOTAL: 1194445.32

Date 10/26/2010

P.I. Number 0000408 County SPALDING

Project Number STP00-0000-00(408)

Special Provision, Section 109-Measurement and Payment

FUEL PRICE ADJUSTMENT (*ENGLISH 125% MAX*)

ENTER FPL DIESEL	2.933
ENTER FPM DIESEL	6.599

ENTER FPL UNLEADED	2.62
ENTER FPM UNLEADED	5.895

http://www.dot.ga.gov/doingbusiness/Materials/Pages/asphaltcementindex.aspx

INCREASE ADJUSTMENT
125.00%

INCREASE ADJUSTMENT
125.00%

ROADWAY ITEMS	QUANTITY	DIESEL FACTOR	GALLONS DIESEL	UNLEADED FACTOR	GALLONS UNLEADED	REMARKS
Excavations paid as specified by Sections 205 **(CUBIC YARD)**		0.29		0.15		
Excavations paid as specified by Sections 206 **(CUBIC YARD)**		0.29		0.15		
GAB paid as specified by the ton under Section 310 **(TON)**	7171.000	0.29	2079.59	0.24	1721.04	
Hot Mix Asphalt paid as specified by the ton under Sections 400 **(TON)**		2.90		0.71		
Hot Mix Asphalt paid as specified by the ton under Sections 402 **(TON)**	8485.000	2.90	24606.50	0.71	6024.35	
PCC Pavement paid as specified by the square yard under Section 430 **(SY)**		0.25		0.20		

BRIDGE ITEMS	Quantity	Unit Price	QF/1000	Diesel Factor	Gallons Diesel	Unleaded Factor	Gallons Unleaded	REMARKS
Bridge Excavation (CY) Section 211				8.00		1.50		
Class __Concrete (CY) Section 500				8.00		1.50		
Class __Concrete (CY) Section 500				8.00		1.50		
Class __Concrete (CY) Section 500				8.00		1.50		
Superstru Con Class__(CY) Section 500				8.00		1.50		
Superstru Con Class__(CY) Section 500				8.00		1.50		
Superstru Con Class__(CY) Section 500				8.00		1.50		
Concrete Handrail (LF) Section 500				8.00		1.50		
Concrete Barrier (LF) Section 500				8.00		1.50		

BRIDGE ITEMS	Quantity	Unit Price	QF/1000	Diesel Factor	Gallons Diesel	Unleaded Factor	Gallons Unleaded	REMARKS
Stru Steel Plan Quantity (LB) Section 501				8.00		1.50		
Stru Steel Plan Quantity (LB) Section 501				8.00		1.50		
PSC Beams_____ (LF) Section 507				8.00		1.50		
PSC Beams_____ (LF) Section 507				8.00		1.50		
PSC Beams_____ (LF) Section 507				8.00		1.50		
Stru Reinf Plan Quantity(LB) Section 511				8.00		1.50		
Stru Reinf Plan Quantity(LB) Section 511				8.00		1.50		
Bar Reinf Steel (LB) Section 511				8.00		1.50		
Piling___inch (LF) Section 520				8.00		1.50		
Piling___inch (LF) Section 520				8.00		1.50		
Piling___inch (LF) Section 520				8.00		1.50		
Piling___inch (LF) Section 520				8.00		1.50		
Piling___inch (LF) Section 520				8.00		1.50		
Piling___inch (LF) Section 520				8.00		1.50		
Drilled Caisson,___ (LF) Section 524				8.00		1.50		
Drilled Caisson,___ (LF) Section 524				8.00		1.50		
Drilled Caisson,___ (LF) Section 524				8.00		1.50		
Pile Encasement,___(LF) Section 547				8.00		1.50		
Pile Encasement,___(LF) Section 547				8.00		1.50		

SUM QF DIESEL=	26686.09	SUM QF UNLEADED=	7745.39

DIESEL PRICE ADJUSTMENT($)	$90,010.85
UNLEADED PRICE ADJUSTMENT($)	$23,336.86

ASPHALT CEMENT PRICE ADJUSTMENT
(BITUMINOUS TACK COAT 125% MAX)

APPLICABLE TO CONTRACTS/PROJECTS CONTAINING THE 413 SPECIFICATION, SECTION 413.5.01 ADJUSTMENTS
ASPHALT PRICE ADJUSTMENT FOR BITUMINOUS TACK COAT

http://www.dot.ga.gov/doingbusiness/Materials/Pages/asphaltcementindex.aspx

ENTER APL 450 **ENTER APM** 1012.5

125.00%	INCREASE ADJUSTMENT

L.I.N.	TYPE	TACK (GALLONS)	TACK (TONS)	REMARKS
413-1000		1550	6.6574	

TMT = 6.6574

PRICE ADJUSTMENT($)	$3,595.00

400 / 402 ASPHALT CEMENT PRICE ADJUSTMENT 125% MAX

ENTER APL 450 **ENTER APM** 1012.5

http://www.dot.ga.gov/doingbusiness/Materials/Pages/asphaltcementindex.aspx

125.00%	INCREASE ADJUSTMENT

L.I.N. / Spec Number	MIX TYPE	HMA	JMF AC%	AC	REMARKS
402-1812	4.75 mm	2785	5.00	139.25	LEVELING
402-3121	25 mm SP	2770	5.00	138.50	
402-3130	12.5 mm SP	1730	5.00	86.50	
402-3190	19 mm SP	1200	5.00	60.00	
			5.00		
			5.00		
			5.00		
			5.00		
			5.00		
			5.00		
			5.00		
			5.00		
			5.00		
			5.00		
			5.00		
			TMT =	424.25	

PRICE ADJUSTMENT($)	$229,095.00

ASPHALT CEMENT PRICE ADJUSTMENT FOR BITUMINOUS TACK COAT(Surface Treatment 125% MAX)

APPLICABLE TO CONTRACTS CONTAINING THE 413 SPEC. SECTION 413.5.01 ADJUSTMENTS ASPHALT PRICE ADJUSTMENT FOR BITUMINOUS TACK COAT

http://www.dot.ga.gov/doingbusiness/Materials/Pages/asphaltcementindex.aspx

ENTER APL 450 ENTER APM 1012.5

125.00%	INCREASE ADJUSTMENT

Use this side for Asphalt Emulsion Only

L.I.N.	TYPE	ASPHALT EMULSION (GALLONS)

TMT =

REMARKS:

Use this side for Asphalt Cement Only

L.I.N.	TYPE	TACK (GALLONS)

TMT =

REMARKS:

MONTHLY PRICE ADJUSTMENT($)	

ADJUSTMENT SUMMARY

FUEL PRICE ADJUSTMENT *(ENGLISH 125% MAX)*

DIESEL PRICE ADJUSTMENT($)	$90,010.85
UNLEADED PRICE ADJUSTMENT($)	$23,336.86
ASPHALT CEMENT PRICE ADJUSTMENT (BITUMINOUS TACK COAT 125% MAX)	$3,595.00
400 / 402 ASPHALT CEMENT PRICE ADJUSTMENT 125% MAX	$229,095.00
ASPHALT CEMENT PRICE ADJUSTMENT FOR BITUMINOUS TACK COAT(Surface Treatment 125% MAX)	

REMARKS:

TOTAL ADJUSTMENTS	$346,037.71

DWM 10/08

Preliminary Right of Way Cost Estimate

Phil Copeland
Right of Way Administrator
By: LaShone B. Alexander

Date: August 25, 2010
Project: STP00-0000-00(408) Spalding — **P.I. Number: 0000408**
Existing/Required R/W: Varies/Varies — **No. Parcels: 23**
Project Termini : SR 16/Newnan Road @ CR 35/Vaughn Rd & CR 507/Rover Zetella Road
Project Description: SR 16/Newnan Road @ CR 35/Vaughn Rd & CR 507/Rover Zetella Road

Land:	Commercial	0.658 acres @ $150,000/acre	$ 98,700
	Commercial Easement	0.164 acres @ $150,000/acre @ 50%	$ 12,319
	Agricultural	2.40 acres @ $ 15,000/acre	$ 36,000
	Residential RW	1.79 acres @ $ 30,000/acre	$ 53,700
			200,719
Improvements : landscaping, gas station, misc. site improvements			1,000,000
Relocation:	Commercial (1)	25,000	25,000
	Residential (0)		0
Damage :	Proximity		
	Consequential		
	Cost to Cure		0
		Net Cost	$ 1,225,719

Net Cost		$ 1,225,719
Scheduling Contingency	55 %	674,145
Adm/Court Cost	60 %	1,139,918
		$ 3,039,783

Total Cost $3,039,800

Note: The Market Appreciation (40%) is not included in the updated Preliminary Cost Estimate.

DEPARTMENT OF TRANSPORTATION
STATE OF GEORGIA

INTERDEPARTMENT CORRESPONDENCE

FILE **STP00-0000-00(408), Spalding County, P.I. # 0000408**
SR-16 @ CR 35/Vaughn Rd & CR 507/Rover Rd - Turn Lanes

OFFICE Thomaston

DATE October 27, 2010

FROM Kerry Gore, District Utilities Engineer

TO Kimberly Nesbitt, Project Manager

SUBJECT **PRELIMINARY UTILITY COST (ESTIMATE)**

As requested by your office, we are furnishing you with a Preliminary Utility Cost estimate for each utility with facilities potentially located within the project limits.

FACILITY OWNER	NON-REIMBURSABLE	REIMBURSABLE
BellSouth d/b/a AT&T Georgia	316,250	345,000
Central Georgia EMC	0	148,350
Charter Communications	23,000	0
Georgia Power (Distribution)	0	115,000
Georgia Power (Transmission)	0	172,500
Spalding County Water	103,500	0
TOTALS	**$442,750**	**$780,850**

Total Preliminary Utility Cost Estimate **$1,223,600**.

If you have any questions, please contact Kerry Gore at 706-646-6692.

KG/pls

cc: Jeff Baker, P.E., State Utilities Engineer *(via: e-mail)*
Angela Robinson, Office of Financial Management *(via: e-mail)*
Mark Sanford, Area Engineer *(via: e-mail)*