ORIGINAL TO GENERAL FILES

DEPARTMENT OF TRANSPORTATION
STATE OF GEORGIA

OFFICE OF DESIGN POLICY & SUPPORT
INTERDEPARTMENTAL CORRESPONDENCE

FILE P.I. #0000313
STP00-0000-00(313)
GDOT District 4 - Tifton
Ben Hill, Irwin Counties
SR 107 From West of CR 264/Irwin
to SR 11/US 129/Ben Hill
Reconstruction/Rehabilitation

OFFICE Design Policy & Support

DATE 11/29/2011

FROM for Brent Story, State Design Policy Engineer

TO SEE DISTRIBUTION

SUBJECT **APPROVED REVISED CONCEPT REPORT**

Attached is the approved Revised Concept Report for the above subject project.

Attachment

DISTRIBUTION:

Genetha Rice-Singleton, Program Control Administrator
Bobby Hilliard, State Program Delivery Engineer
Cindy VanDyke, State Transportation Planning Administrator
Angela Robinson, Financial Management Administrator
Glenn Bowman, State Environmental Administrator
Ben Rabun, State Bridge Engineer
Kathy Zahul, State Traffic Engineer
Georgene Geary, State Materials & Research Engineer
Ron Wishon, State Project Review Engineer
Jeff Baker, State Utilities Engineer
Ken Thompson, Statewide Location Bureau Chief
Michael Henry, Systems & Classification Branch Chief
Joe Sheffield, District Engineer
Brent Thomas, District Preconstruction Engineer
Tim Warren, District Utilities Engineer
Peter Emmanuel, Project Manager
BOARD MEMBER - 8th Congressional District

DEPARTMENT OF TRANSPORTATION
STATE OF GEORGIA

REVISED PROJECT CONCEPT REPORT

Project Number: STP00-0000-00(313)
County: Ben Hill and Irwin
P. I. Number: 0000313
Federal Route Number: None
State Route Number: S.R. 107

To reduce right of way limits and environmental impacts, the following is proposed as suggested from the Value Engineering Study: 1) Realignment of 5000' of mainline due to a reduction in the curve radii 2) Modifications to the typical sections by means of A) Reducing the median width from 44' to 32' in the rural section and 24' to 18' in the urban B) Changing rural paved shoulder from 6.5' to 4' and urban border area width from 16' to 12' C) Using 24" curb & gutter in lieu of 30" D) Eliminating sidewalk on south side of urban section 3) Shorten left turn lanes to minimum allowable deceleration length.

Submitted for approval:

Date 10/3/2011 — Florence & Hutcheson
Design Consultant Name and Firm Name

Date 10/3/2011 — Office Head (Project Manager's Office)

Date 10/3/2011 — Project Manager

Recommendation for approval:

Date 10-18-2011 — Glenn Bowman *
State Environmental Administrator

Date 11-7-2011 — Ben Rabun *
State Bridge Design Engineer

The concept as presented herein and submitted for approval is consistent with that which is included in the Regional Transportation Plan (RTP) and/or the State Transportation Improvement Program (STIP).

Date 10-11-2011 — Cindy VanDyke *
State Transportation Planning Administrator

* Recommendation on file

REVISED PROJECT CONCEPT REPORT

Need and Purpose: See Attachments

Project Location: The Project STP00-0000-00(313), PI Number 0000313, is proposed to begin widening approximately 2320 feet west of the Cleveland Road / County Road 264 intersection, mile marker 3.52, in Irwin County and will end approximately 1600 feet east of the S.R. 107 / U.S. 129 intersection, mile marker 5.90, in Ben Hill County. The length of the project is approximately 10.45 miles, 4.25 miles in Irwin County and 6.20 in Ben Hill County, with 80 % rural section and 20 % urban section.

Description of the approved concept: The proposed typical section for the rural location will be two 12-foot travel lanes in each direction separated by a 44-foot depressed median, with a 6.5 / 3.5 foot paved / graded shoulder. The proposed typical section for the urban area will be two 12-foot travel lanes in each direction separated by a 24-foot raised median, with a 16-foot shoulder on each side with curb and gutter and a 5-foot sidewalk. The rural section will end at approximately mile marker 3.60 Ben Hill County and transition for approximately 500 feet to the urban section. The typical right of way for the rural section is 200 feet, and 120 feet for the urban section. The length of the project is approximately 10.45 miles, 4.25 miles in Irwin County and 6.20 in Ben Hill County, with 80 % rural section and 20 % urban section. The proposed widening will be the final link of S.R. 107, completing a continuous multi-lane corridor between the cities of Ashburn, at I-75, and Fitzgerald, at S.R. 11 / U.S. 129.

The intersection of S.R. 107 / 10 Mile road (CR 245) and S.R. 107 / Redwood road (CR 106) will be removed and replaced with approximately 2.75 degree of curve that will provide a continuous travel way along S.R. 107. At this location, a connector road, approximately 1000' feet, will be provided for access to the proposed S.R. 107 roadway and the existing Industrial Drive.

The existing bridge over the Willacoochee creek at mile marker 3.14 will be maintained as a detour while the new bridge is built to the Southside; after the new bridge is completed, the existing bridge will be demolished and replaced with a new bridge. The proposed typical section for the bridge is 2 -12 foot lanes, with a 4 foot inside shoulder, and a 10 foot outside shoulder; see the S.R. 107 Proposed Bridge Typical. The reason the alignment is being widened to the south side is to avoid any impacts to the sewer lift-station and to avoid two residences along the north side of the alignment. The proposed bridge length will be approximately 166 feet.

A CSX At-grade railroad crossing is located near mile marker 5.44. This crossing will be upgraded to provide for all four lanes and the sidewalks.

Project Number: STP00-0000-00(313)
P. I. Number: 0000313
Counties: Ben Hill & Irwin

This project crosses Georgia Bike Route 20 at the intersection of S.R. 107 and S.R. 125. The local government has requested that the rural bike shoulder be added to the S.R. 107 mainline rural typical section.

The maximum average daily traffic (ADT) on S.R. 107 is 6900 vehicles at the Wal-Mart Drive in 2012, the projected letting date, and a total of 10950 vehicles in 2032, the design year. The signal at the Wal-Mart entrance is proposed to be moved approximately 525' to the west along S.R. 107 in order to accommodate a 500' turn bay for both directions. For the S.R. 107 / S.R. 125 intersection a signal warrant analysis will be performed by the consultant designer; the existing condition is a flashing red 4-way stop sign. The right turn lane at the S.R. 107 / Jeff Davis intersection will require a 350' turn lane on S.R. 107.

PDP Classification: Major: X Minor: _____

Federal Oversight: Full Oversight ( ) Exempt (X) State Funded ( ) or Other ( )

Functional Classification: Rural Major Collector

U.S. Route Number(s): 129 & 319 State Route Number(s): 11, 90 & 107

Traffic (AADT) as shown in the approved concept:
Base Year (2012): 6900 Design Year (2032): 10950

Updated Traffic (AADT):
Base Year (2016): 6650 Design Year (2036): 8600

Approved Programmed/Schedule:
P.E.: 2003 R/W: ~~2016~~ 2017 RRM Construction: ~~2019~~ LRI RRM

VE Study Required: **Yes (X)** **No ( )** **Comment:** VE Study Held on 8/21/2009

Is this project located in an Ozone Non-attainable area? **Yes ( )** **No (X)**

Is this project located in a PM2.5 Non-attainable area? **Yes ( )** **No (X)**

Project Number: STP00-0000-00(313)
P. I. Number: 0000313
Counties: Ben Hill & Irwin

Approved Features:	**Proposed Features:**
• Typical Section(s), Rural – 44' depressed median with 6.5'/3.5' paved/graded shoulder and 200' of right of way. Urban – 24' raised median with 16' border area including 30" curb & gutter and 5' sidewalk on both sides and 120' of right of way.	• Typical Section(s), Rural – 32' depressed median with 4.0'/6.0' paved/graded shoulder and 190' of right of way. Urban – 18' raised median with 12' border area including 24" curb & gutter and 5' sidewalk on the north side only and 114' of right of way.
• Intersection of S.R. 107 and Redwood Road – New alignment 3,274.05' radius curve	• Intersection of S.R. 107 and Redwood Road – New alignment 2,600.00' radius curve
Reason for Change: The above changes are part of the implementation of the Value Engineering Study for this project which reduce right of way limits and environmental impacts as well as to reduce construction costs for paving, concrete, earthwork, and pipes.	

Potential Environmental Impacts of Proposed Revision:
This revision proposes narrower typical sections, therefore, the potential environmental impacts are reduced. It is anticipated that this revision will have a minor effect on the environment/project schedule.

Have Proposed Revisions Been Reviewed by Environmental Staff? Yes (X) No ( )

Environmental Responsibilities (Studies/Documents/Permits):
NEPA: The draft EA will need to be updated to reflect the revised special studies.
Ecology: It is anticipated that there will be reduced impacts to ecological resources.
Archeology: It is anticipated that there will be no additional effects on the archeological resources. The new aligned section shall be surveyed and included in the archeological report.
History: It is anticipated that there will be no additional effects on the historic resources. The existing history survey will expire in February 2012 and will need to be updated.
Air/Noise: Air/Noise analyses will need to be updated to reflect new standards and traffic data.
Public Involvement: There will be no additional public outreach required

Project Number: STP00-0000-00(313)
P. I. Number: 0000313
Counties: Ben Hill & Irwin

Updated Cost Estimate	
Base Construction Cost	$25,733,259.56
Engineering and Inspection (5%)	$1,286,662.98
Fuel and Asphalt Adjustment	$2,455,557.74
Total Construction Cost	$29,475,480.28
Right-of-Way	$ 7,217,000.00
Utilities (Reimbursable)	$ 1,838,400.00
Environmental Mitigation	$ 1,273,400.00

Recommendation: Recommend that the proposed revision to the concept be approved for implementation.

Attachments:

1. Sketch Map
2. Need and Purpose Statement
3. Cost Estimates:
    a. Construction including E&C
    b. Liquid AC Adjustment
    c. Right of Way
    d. Utilities
    e. Environmental Mitigation
4. Typical Sections
5. Capacity Analysis
6. Crash Analysis
7. Concept Layout
8. VE Implementation Letter

Project Number: STP00-0000-00(313)
P. I. Number: 0000313
Counties: Ben Hill & Irwin

Exempt Projects

Concur: _____
Director of Engineering

Approve: _____ Date: 11-28-11
Chief Engineer

Location Map
STP00-0000-00(313)
P.I. 0000313
SR 107 From CR 264 to SR 11/US 129
Irwin and Ben Hill Counties

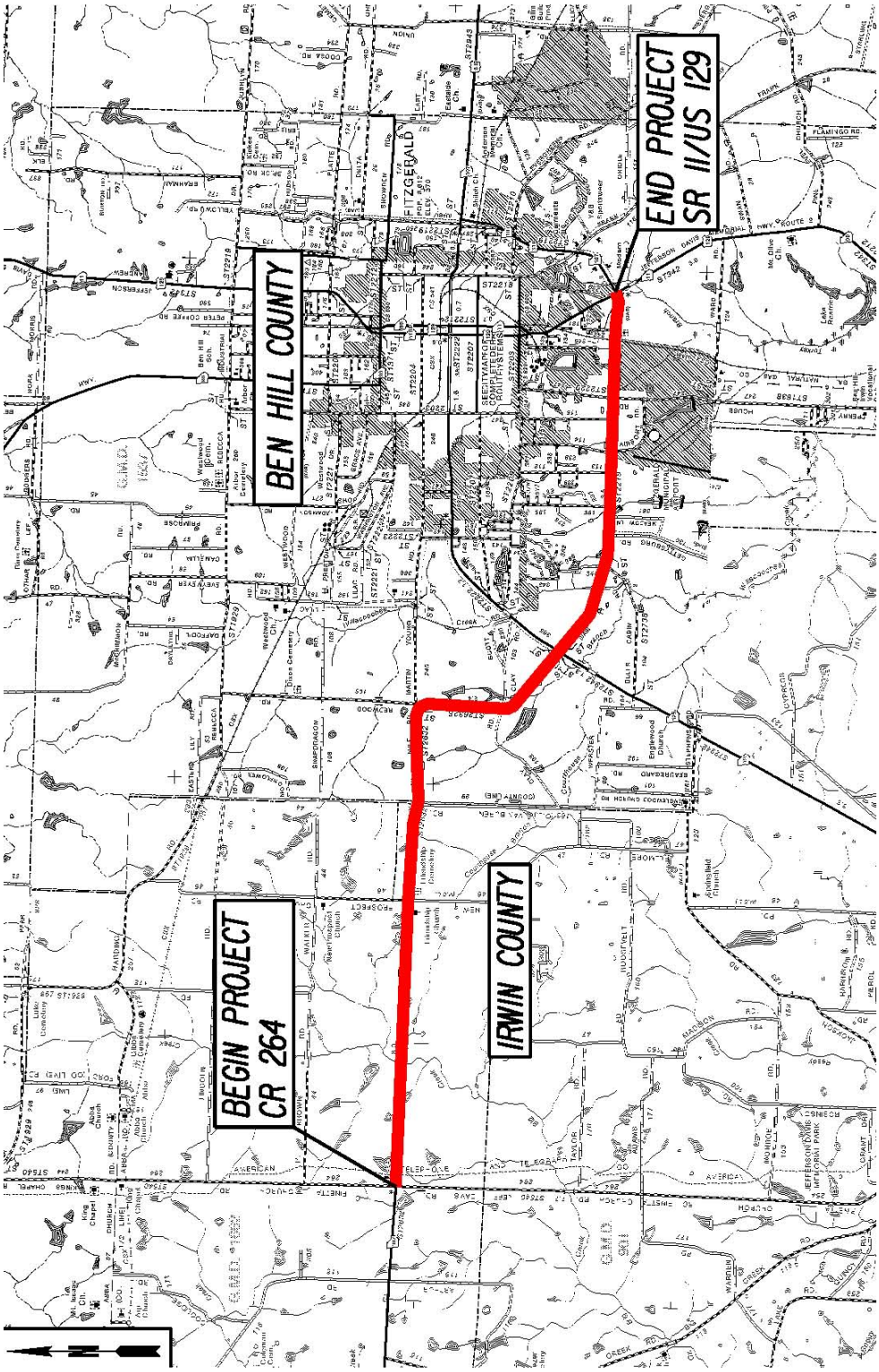

NEED and PURPOSE

State Route 107 from CR 264/Jeff Davis Road to SR 11/US 129

STP-0000-00(313) Irwin and Ben Hill County

PI No. 0000313

State Route 107 is an east-west corridor in South Georgia and provides a connection from the City of Fitzgerald westward to Interstate 75. SR 107 consists of two 12 foot lanes and is functionally classified as a rural major collector. SR 107 is also on a Surface Transportation Assistance Act (STAA) route which allows large trucks to operate on the Interstate and certain primary routes called collectively the National Network. This corridor serves traffic traveling east to west in this portion of Georgia. SR 107 is one of several routes that provide connectivity to Interstate 75 and is the most direct connector from Interstate 75 for the City of Fitzgerald in Ben Hill County.

Land Use

The land use along this corridor currently is predominantly forested and agricultural usage with little development. Land use will remain this way with most development occurring in areas already considered urban, according to the current Ben Hill County Comprehensive Plan (2005-2025).

Demographics

SR 107 crosses through Irwin and Ben Hill County, whose populations has increased by 14.8% and 7.6%, respectively, between 1990 and 2000. The 2000 population for Irwin and Ben Hill County was 9,931 and 17,484, respectively. This section of SR 107 crosses through Irwin County Census Tract 131559501 and Ben Hill Census Tract 130179603 which had year 2000 minority populations of 4.0% and 35.6%, respectively. By comparison, in the year 2000, the statewide average was 34.9% (the U.S. Census defines a minority population as Black/African-American, Hispanic/Latino, Asian/Pacific Islander, or American Indian/Alaska Native). The

U.S. Census Bureau estimated 17.4% Irwin County and 19.3% of Ben Hill County were living below the poverty level in 2003, compared to a statewide average of 13.3%.

Accidents

From 2001 to 2004, accident rates, injury rates and fatality rates were lower than the state average for a similar facility except for the accident rate of the year 2003. Table 1 below summarizes the corridor's accident statistics:

Table 1

	2001		2002		2003		2004	
	SR 107	State	SR 107	State	SR 107	State	SR 107	State
Accidents	19	-	8	-	18	-	13	-
Accident Rate	171	180	80	195	178	211	135	273
Injuries	9	-	6	-	23	-	7	-
Injury Rate	81	98	60	104	227	110	72	145
Fatalities	0	-	0	-	0	-	0	-
Fatality Rate	0	2.29	0	2.37	0	2.95	0	3.24

Traffic

The Average Annual Daily Traffic (AADT) on this portion of SR 107 for the year 2005 ranges from a high of 9,400 vehicles per day near the intersection of SR 107 and SR 11/US 129 to a low of 1,550 vehicles per day between CR 106/Redwood Road (Ben Hill County) and CR 103/Clay Road (Ben Hill County) which correspond to a Level of Service "D" and "B", respectively. Traffic for the year 2032 is projected to be 21,900 vehicles per day near the intersection of SR 107 and SR 11/US 129 to 2,300 vehicles per day from between CR 106/Redwood Road (Ben Hill County) and CR 103/Clay Road (Ben Hill County). This corresponds to a Level of Service "E" and "B", respectively, if no improvements are made. Truck traffic is estimated at 20% for both current (2005) and future (2032) traffic conditions.

Logical Termini

PI #0000313 is one of three proposed projects that will widen SR 107 from Interstate 75 to the City of Fitzgerald in Ben Hill County. The proposed limits of these three projects (PI # 0000311, 0000313 and 0000314) have logical termini together. Because these projects have logical termini only when considered as in combination, consideration should be given to analyze these three projects together in one environmental document.

The western terminus of these projects is proposed to begin at the intersection of SR 107 and Interstate 75 in Turner County. The terminus of this project is logical because of the Surface Transportation Assistance Act (STAA) route status of SR 107 and the high percentage (20%) of trucks that utilize this route to access Interstate 75.

The eastern terminus is logical because the traffic volumes drop from 9,400 vehicles per day to 5,600 vehicles per day at the intersection of SR 11/US 129 in the City of Fitzgerald.

Need and Purpose

In 1998, the Office of Planning completed a study that evaluated the benefits of widening SR 107 in Ben Hill, Irwin and Turner Counties. This study concluded that no improvements are required for SR 107 in Turner, Irwin or Ben Hill County based upon existing or forecast traffic and accident rates. Current data supports the findings of the study conducted in 1998 with the exception of the area of SR 107 within the City Limits of Fitzgerald which are projected to operate at an unacceptable Level of Service. In 2002, SR 32 and SR 125 were added to the Governor's Road Improvement Program to be four laned. These routes provide a parallel corridor to SR 107.

The City of Fitzgerald has approximately 50 major industries that include food processing, clothing manufacturing, carpet yarn manufacturing, housing manufacturing and cargo trailer manufacturing. These industries provide employment for the populations of Ben Hill, Coffee, Dodge, Irwin, Telfair, Turner and Wilcox Counties. SR 107 is the most direct route to the City of Fitzgerald from Interstate 75 and therefore the most utilized route for the manufacturing facilities to receive and ship goods. Improving SR 107 to a four lane facility from I-75 to Fitzgerald could help stimulate growth in these counties. This project is expected to be a benefit to all communities.

STATE HIGHWAY AGENCY

DATE : 10/17/2011
PAGE : 1

JOB ESTIMATE REPORT

JOB NUMBER : 0000313 SPEC YEAR: 01
DESCRIPTION: SR 107 WIDENING

ITEMS FOR JOB 0000313

LINE	ITEM	ALT	UNITS	DESCRIPTION	QUANTITY	PRICE	AMOUNT
0010	150-1000		LS	TRAFFIC CONTROL - STP00-0000-00(313)	1.000	950000.00	950000.00
0015	153-1300		EA	FIELD ENGINEERS OFFICE TP 3	1.000	62289.10	62289.11
0020	201-1500		LS	CLEARING & GRUBBING - STP00-0000-00(313)	1.000	3500000.00	3500000.00
0025	205-0001		CY	UNCLASS EXCAV	269577.000	3.06	827353.38
0030	206-0002		CY	BORROW EXCAV, INCL MATL	265425.000	3.53	938102.19
0035	207-0203		CY	FOUND BKFILL MATL, TP II	1000.000	42.16	42165.23
0040	310-1101		TN	GR AGGR BASE CRS, INCL MATL	188818.000	14.68	2773192.62
0045	318-3000		TN	AGGR SURF CRS	1500.000	19.70	29555.63
0050	402-1812		TN	RECYL AC LEVELING,INC BM&HL	11000.000	63.44	697926.02
0055	402-3121		TN	RECYL AC 25MM SP,GP1/2,BM&HL	58779.000	78.54	4616825.94
0060	402-3130		TN	RECYL AC 12.5MM SP,GP2,BM&HL	36018.000	61.09	2200377.44
0065	402-3190		TN	RECYL AC 19 MM SP,GP 1 OR 2 ,INC BM&HL	33549.000	61.14	2051248.93
0070	413-1000		GL	BITUM TACK COAT	49520.000	1.73	85751.31
0074	433-1000		SY	REINF CONC APPROACH SLAB	527.000	143.02	75375.31
0075	432-5010		SY	MILL ASPH CONC PVMT,VARB DEPTH	86495.000	1.12	97059.50
0080	441-0016		SY	DRIVEWAY CONCRETE, 6 IN TK	800.000	32.11	25689.88
0085	441-0104		SY	CONC SIDEWALK, 4 IN	15020.000	24.29	364907.45
0090	441-0748		SY	CONC MEDIAN, 6 IN	6980.000	29.66	207068.61
0095	441-4030		SY	CONC VALLEY GUTTER, 8 IN	1020.000	40.49	41309.95
0100	441-6012		LF	CONC CURB & GUTTER/ 6"X24"TP2	30890.000	6.11	188834.89
0105	441-6718		LF	CONC CURB & GUTTER,6"X24",TP 7	24345.000	7.00	170415.00
0110	444-1000		LF	SAWED JTS IN EXIST PVMTS - PCC	870.000	3.07	2675.62
0115	446-1100		LF	PVMT REF FAB STRIPS, TP2,18 INCH WIDTH	51505.000	1.48	76514.80
0120	456-2015		GLM	INDENT. RUMB. STRIPS - GRND-IN-PL (SKIP)	15.000	718.74	10781.23
0125	500-3101		CY	CLASS A CONCRETE	1330.000	369.70	491703.19
0130	500-3200		CY	CL B CONC	20.000	154.08	3081.67
0135	500-9999		CY	CL B CONC,BASE OR PVMT WIDEN	300.000	146.28	43885.21
0140	511-1000		LB	BAR REINF STEEL	159805.000	0.63	100907.27
0145	550-1180		LF	STM DR PIPE 18",H 1-10	12725.000	26.61	338619.38
0150	550-1240		LF	STM DR PIPE 24",H 1-10	1860.000	34.83	64802.23
0155	550-1300		LF	STM DR PIPE 30",H 1-10	1230.000	41.87	51502.67
0160	550-1302		LF	STM DR PIPE 30",H 15-20	140.000	73.56	10299.43

0165	550-1360	LF	STM DR PIPE 36",H 1-10	1755.000	50.52	88672.22
0170	550-1420	LF	STM DR PIPE 42",H 1-10	300.000	59.84	17953.55
0175	550-1480	LF	STM DR PIPE 48",H 1-10	275.000	66.43	18269.47
0180	550-2180	LF	SIDE DR PIPE 18",H 1-10	3330.000	20.80	69291.71
0185	550-2240	LF	SIDE DR PIPE 24",H 1-10	135.000	27.86	3762.20
0190	550-3518	EA	SAFETY END SECTION 18",STD,6:1	5.000	675.72	3378.62
0195	550-3524	EA	SAFETY END SECTION 24",STD,6:1	10.000	793.49	7934.97
0200	550-3536	EA	SAFETY END SECTION 36",STD,6:1	15.000	1799.30	26989.59
0205	550-3618	EA	SAFETY END SECTION 18",SD,6:1	170.000	513.04	87217.97
0210	550-3624	EA	SAFETY END SECTION 24",SD,6:1	10.000	747.42	7474.24

0215	550-4218	EA	FLARED END SECT 18 IN, ST DR	10.000	479.39	4793.90
0220	550-4224	EA	FLARED END SECT 24 IN, ST DR	5.000	554.45	2772.26
0225	550-4230	EA	FLARED END SECT 30 IN, ST DR	10.000	643.65	6436.58
0230	550-4236	EA	FLARED END SECT 36 IN, ST DR	15.000	893.08	13396.20
0235	550-4242	EA	FLARED END SECT 42 IN, ST DR	5.000	1364.57	6822.87
0239	632-0003	EA	CHANGEABLE MESS SIGN,PORT,TP 3	8.000	8793.86	70350.90
0240	634-1200	EA	RIGHT OF WAY MARKERS	360.000	81.53	29352.66
0244	641-1100	LF	GUARDRAIL, TP T	84.000	62.25	5229.26
0245	641-1200	LF	GUARDRAIL, TP W	8791.000	14.25	125344.54
0250	641-5001	EA	GUARDRAIL ANCHORAGE, TP 1	25.000	601.24	15031.14
0255	641-5012	EA	GUARDRAIL ANCHORAGE, TP 12	25.000	1832.64	45816.11
0260	668-1100	EA	CATCH BASIN, GP 1	110.000	2280.49	250854.88
0265	668-1110	LF	CATCH BASIN, GP 1, ADDL DEPTH	55.000	146.12	8036.79
0270	668-1200	EA	CATCH BASIN, GP 2	15.000	2306.59	34598.95
0275	668-1210	LF	CATCH BASIN, GP 2, ADDL DEPTH	25.000	217.89	5447.36
0280	668-2100	EA	DROP INLET, GP 1	25.000	1670.66	41766.60
0285	668-2110	LF	DROP INLET, GP 1, ADDL DEPTH	20.000	148.79	2975.90
0290	668-5000	EA	JUNCTION BOX	5.000	1628.24	8141.23
0294	540-1101	LS	REM OF EX BR, STA NO - 445+19.05	1.000	100000.00	100000.00
0295	543-9000	LS	CONSTR OF BRIDGE COMPLETE - STP00-0000-00(313)	1.000	691000.00	691000.00
0300	543-9000	LS	CONSTR OF BRIDGE COMPLETE - STP00-0000-00(313)	1.000	622000.00	622000.00
0305	163-0232	AC	TEMPORARY GRASSING	60.000	400.52	24031.65
0310	163-0240	TN	MULCH	2515.000	149.98	377204.13
0315	163-0300	EA	CONSTRUCTION EXIT	10.000	1203.05	12030.50
0320	163-0503	EA	CONSTR AND REMOVE SILT CONTROL GATE,TP 3	25.000	343.34	8583.57
0325	163-0520	LF	CONSTR AND REMOVE TEMP PIPE SLOPE DRAIN	12.550	15.83	198.75
0330	163-0529	LF	CNST/REM TEMP SED BAR OR BLD STRW CK DM	37570.000	2.54	95477.39
0335	163-0531	EA	CONSTR & REM SEDIMENT BASIN,TP 1,STA	10.000	7467.97	74679.71

NO- STP00-0000-00(313)

0340	163-0550	EA	CONS & REM INLET SEDIMENT TRAP	160.000	169.25	27081.21
0345	165-0010	LF	MAINT OF TEMP SILT FENCE, TP A	50000.000	0.47	23546.50
0350	165-0030	LF	MAINT OF TEMP SILT FENCE, TP C	18500.000	0.39	7307.69
0355	165-0050	LF	MAINT OF SILT RETENTION BARRIER	30000.000	2.43	73143.00
0360	165-0060	EA	MAINT OF TEMP SEDIMENT BASIN,STA NO -	10.000	1027.81	10278.17
0365	165-0070	LF	MAINT OF BALED STRAW EROSION CHECK	18785.000		
0370	165-0087	EA	MAINT OF SILT CONTROL GATE, TP 3	25.000	127.62	3190.59
0375	165-0101	EA	MAINT OF CONST EXIT	10.000	630.16	6301.68
0380	165-0105	EA	MAINT OF INLET SEDIMENT TRAP	160.000	56.35	9017.37
0385	167-1000	EA	WATER QUALITY MONITORING AND SAMPLING	10.000	364.29	3642.97
0390	167-1500	MO	WATER QUALITY INSPECTIONS	60.000	555.21	33312.81
0395	171-0010	LF	TEMPORARY SILT FENCE, TYPE A	100240.000	1.41	141358.45
0400	171-0030	LF	TEMPORARY SILT FENCE, TYPE C	39000.000	2.98	116273.82
0405	441-0204	SY	PLAIN CONC DITCH PAVING, 4 IN	625.000	28.46	17791.37
0410	603-2024	SY	STN DUMPED RIP RAP, TP 1, 24"	800.000	47.65	38125.16
0415	603-2180	SY	STN DUMPED RIP RAP, TP 3, 12"	405.000	39.78	16111.70
0420	603-2181	SY	STN DUMPED RIP RAP, TP 3, 18"	135.000	44.18	5964.39
0425	603-2186	SY	STN DUMPED RIP RAP, TP 3, 36"	125.000	54.66	6832.77

0430	603-7000	SY	PLASTIC FILTER FABRIC	1372.000	3.60	4943.12
0435	700-6910	AC	PERMANENT GRASSING	106.000	485.65	51479.17
0440	700-7000	TN	AGRICULTURAL LIME	106.000	18.89	2002.95
0445	700-7010	GL	LIQUID LIME	265.000	16.88	4475.72
0450	700-8000	TN	FERTILIZER MIXED GRADE	15.000	453.22	6798.32
0455	700-8100	LB	FERTILIZER NITROGEN CONTENT	5395.000	2.41	13012.15
0460	715-2200	SY	BITUM TRTD ROVING, WATERWAYS	9945.000	1.69	16852.10
0465	716-1000	SY	EROSION CONTROL MATS,WATERWAYS	20680.000	1.84	38164.94
0470	716-2000	SY	EROSION CONTROL MATS, SLOPES	62755.000	1.00	62755.00
0475	636-1020	SF	HWY SGN,TP1MAT,REFL SH TP3	2310.000	11.43	26404.71
0480	636-1033	SF	HWY SIGNS, TP1MAT,REFL SH TP 9	1205.000	16.97	20457.73
0485	636-2070	LF	GALV STEEL POSTS, TP 7	6575.000	6.01	39518.18
0490	636-5100	EA	MILEPOST SIGNS	10.000	185.98	1859.87
0495	653-0100	EA	THERM PVMT MARK, RR/HWY X SYM	5.000	350.91	1754.57
0500	653-0110	EA	THERM PVMT MARK, ARROW, TP 1	10.000	66.38	663.87
0505	653-0120	EA	THERM PVMT MARK, ARROW, TP 2	300.000	65.79	19737.29
0510	653-0130	EA	THERM PVMT MARK, ARROW, TP 3	25.000	106.49	2662.33
0515	653-0170	EA	THERM PVMT MARK, ARROW, TP 7	55.000	85.48	4701.52
0520	653-1501	LF	THERMO SOLID TRAF ST 5 IN, WHI	147725.000	0.26	39404.17
0525	653-1502	LF	THERMO SOLID TRAF ST, 5 IN YEL	144050.000	0.28	40699.89
0530	653-1704	LF	THERM SOLID TRAF STRIPE,24",WH	1155.000	3.45	3991.63
0535	653-1804	LF	THERM SOLID TRAF STRIPE, 8",WH	8320.000	1.64	13653.12

0540	653-3501	GLF	THERMO SKIP TRAF ST, 5 IN, WHI	119625.000	0.14	17643.49
0545	653-3502	GLF	THERMO SKIP TRAF ST, 5 IN, YEL	600.000	0.23	142.58
0550	653-6004	SY	THERM TRAF STRIPING, WHITE	20540.000	2.50	51495.63
0555	653-6006	SY	THERM TRAF STRIPING, YELLOW	2225.000	2.71	6045.30
0560	654-1001	EA	RAISED PVMT MARKERS TP 1	140.000	3.38	474.54
0565	654-1003	EA	RAISED PVMT MARKERS TP 3	2360.000	2.58	6098.69
0570	615-1100	LF	DIRECTIONAL BORE PIPE - STP00-0000-00(313)	8000.000	33.76	270137.12
0575	636-1077	SF	HWY SIGN,ALUM EXT PL,REFL SHT,TP 9	102.000	28.03	2859.52
0580	639-4004	EA	STRAIN POLE, TP IV	12.000	4244.50	50934.06
0585	647-1000	LS	TRAF SIGNAL INSTALLATION NO - 1	1.000	54642.03	54642.03
0590	647-1000	LS	TRAF SIGNAL INSTALLATION NO - 2	1.000	54642.03	54642.03
0595	647-1000	LS	TRAF SIGNAL INSTALLATION NO - 3	1.000	54642.03	54642.03
0600	682-6120	LF	CONDUIT, RIGID, 2 IN	12000.000	11.68	140218.08
0605	938-1100	EA	INT VIDEO DET SYS ASMBLY, TP A	3.000	4824.33	14473.00

ITEM TOTAL 25833259.58
INFLATED ITEM TOTAL 25833259.58

TOTALS FOR JOB 0000313

ESTIMATED COST:	25733259.56
CONTINGENCY PERCENT (0.0):	0.00
ESTIMATED TOTAL:	25733259.56

NOTE: The item totals include all alternate items. The estimated totals include only the low cost alternate items.

PROJ. NO.	STP00-0000-00(313)
P.I. NO.	0000313
DATE	9/28/2011

CALL NO.

INDEX (TYPE)	DATE	INDEX
REG. UNLEADED	Sep-11	$ 3.582
DIESEL		$ 3.873
LIQUID AC		$ 570.00

Link to Fuel and AC Index:
http://www.dot.ga.gov/doingbusiness/Materials/Pages/asphaltcementindex.aspx

LIQUID AC ADJUSTMENTS

PA=[((APM-APL)/APL)]xTMTxAPL

Asphalt

Price Adjustment (PA)				**2382816.6**	**$**	**2,382,816.60**
Monthly Asphalt Cement Price month placed (APM)	Max. Cap	60%	$	912.00		
Monthly Asphalt Cement Price month project let (APL)			$	570.00		
Total Monthly Tonnage of asphalt cement (TMT)				6967.3		

ASPHALT	Tons	%AC	AC ton
Leveling	11000	5.0%	550
12.5 OGFC		5.0%	0
12.5 mm	36018	5.0%	1800.9
9.5 mm SP		5.0%	0
25 mm SP	58779	5.0%	2938.95
19 mm SP	33549	5.0%	1677.45
	139346		**6967.3**

BITUMINOUS TACK COAT

Price Adjustment (PA)			**$**	**72,741.14**	**$**	**72,741.14**
Monthly Asphalt Cement Price month placed (APM)	Max. Cap	60%	$	912.00		
Monthly Asphalt Cement Price month project let (APL)			$	570.00		
Total Monthly Tonnage of asphalt cement (TMT)				212.6933977		

Bitum Tack Gals	gals/ton	tons
49520	232.8234	212.693398

PROJ. NO.	STP00-0000-00(313)	CALL NO.	
P.I. NO.	0000313		
DATE	9/28/2011		

BITUMINOUS TACK COAT (surface treatment)

Price Adjustment (PA)				**0**	**$ -**
Monthly Asphalt Cement Price month placed (APM)	Max. Cap	60%	$	912.00	
Monthly Asphalt Cement Price month project let (APL)			$	570.00	
Total Monthly Tonnage of asphalt cement (TMT)				0	

Bitum Tack	SY	Gals/SY	Gals	gals/ton	tons
Single Surf. Trmt.		0.20	0	232.8234	0
Double Surf.Trmt.		0.44	0	232.8234	0
Triple Surf. Trmt		0.71	0	232.8234	0
					0

TOTAL LIQUID AC ADJUSTMENT	**$**	**2,455,557.74**

GEORGIA DEPARTMENT OF TRANSPORTATION
PRELIMINARY ROW COST ESTIMATE SUMMARY

Date: 9/14/2011 Project: STP00-0000-00(313)
Revised: County: Irwin
PI: 0000313

Description: **FROM W OF CR 264/IRWIN TO SR 11/US 129/BEN HILL**
Project Termini: FROM W OF CR 264/IRWIN TO SR 11/US 129/BEN HILL

Existing ROW: Varies
Parcels: 108 Required ROW: Varies

Land and Improvements		$4,739,250.00
Proximity Damage	*$0.00*	
Consequential Damage	*$0.00*	
Cost to Cures	*$0.00*	
Trade Fixtures	*$0.00*	
Improvements	*$1,035,000.00*	
Valuation Services		$147,500.00
Legal Services		$710,400.00
Relocation		$576,000.00
Demolition		$135,000.00
Administrative		$908,500.00
TOTAL ESTIMATED COSTS		$7,216,650.00
TOTAL ESTIMATED COSTS (ROUNDED)		***$7,217,000.00***

Preparation Credits	Hours	Signature

Prepared By: LaShone Alexander CG#: 256999 9/14/11
Approved By: LaShone Alexander CG#: 256999 9/14/11

NOTE: No Market Appreciation is included in this Preliminary Cost Estimate

Georgia Department of Transportation
Preliminary ROW Cost Estimate Worksheet

Project/County/PI STP00-0000-00(313) Irwin 0000313

		A	B	C	D
	Land and Improvements	**Agriculture**	**Residential**	**Commercial**	**Industrial**
1	Estimate Low (ac)	$0.00	$0.00	$0.00	$0.00
2	Estimate High (ac)	$0.00	$0.00	$0.00	$0.00
3	Estimate Used (ac)	$10,000.00	$15,000.00	$60,000.00	$0.00
4	Fee Simple Area (ac)	61.10	56.90	11.00	0.00
5	Fee Simple Estimate	$611,000.00	$853,500.00	$660,000.00	$0.00
6	Perm Esmt Area (ac)	0.00	0.00	0.00	0.00
7	Perm Esmt Factor	0%	0%	0%	0%
8	Perm Esmt Estimate	$0.00	$0.00	$0.00	$0.00
9	Temp Esmt Area (ac)	0.00	0.00	0.00	0.00
10	Temp East Factor	0%	0%	0%	0%
11	Temp Esmt Estimate	$0.00	$0.00	$0.00	$0.00
12	Proximity Damages	$0.00	$0.00	$0.00	$0.00
13	Consequential Damages	$0.00	$0.00	$0.00	$0.00
14	Cost to Cures	$0.00	$0.00	$0.00	$0.00
15	Improvements	$45,000.00	$775,000.00	$215,000.00	$0.00
16	Trade Fixtures	$0.00	$0.00	$0.00	$0.00
17					
18	PROPERTY TYPE TOTALS	$656,000.00	$1,628,500.00	$875,000.00	$0.00
19			SUB TOTAL PROPERTY TYPES		$3,159,500.00
20			Counter Offers and Condemnation Increases		$1,579,750.00
21					
22			**GRAND TOTAL LANDS AND IMPROVEMENTS**		$4,739,250.00

Georgia Department of Transportation
Preliminary ROW Cost Estimate Worksheet

Project/County/PI STP00-0000-00(313) Irwin 0000313

		A	B	C	D
	Valuation Services	**Agriculture**	**Residential**	**Commercial**	**Industrial**
1	Appraisals (# of Parcels)	53	47	9	0
2	Estimated Fees (per Parcel)	$1,000.00	$1,000.00	$2,000.00	$0.00
3	TOTAL APPRAISALS	$53,000.00	$47,000.00	$18,000.00	$0.00
4	Sign Estimates	0	0	0	0
5	Estimated Fees	$0.00	$0.00	$0.00	$0.00
6	TOTAL SIGN ESTIMATES	$0.00	$0.00	$0.00	$0.00
7	Specialty Reports	0	0	0	0
8	Estimated Fees	$0.00	$0.00	$0.00	$0.00
9	TOTAL SPECIALTY REPORTS	$0.00	$0.00	$0.00	$0.00
10	Septic/Well Reports	0	0	0	0
11	Estimated Fees	$0.00	$0.00	$0.00	$0.00
12	TOTAL SEPTIC/WELL REPORTS	$0.00	$0.00	$0.00	$0.00
13					
14					
15					
16	TOTAL VALUATION FEES	$53,000.00	$47,000.00	$18,000.00	$0.00
17			SUB TOTAL VALUATION SERVICES		$118,000.00
18			Updates and Incidentals (Min $2,500 or 25%)		$29,500.00
19			**GRAND TOTAL VALUATION SERVICES**		$147,500.00

Georgia Department of Transportation
Preliminary ROW Cost Estimate Worksheet

Project/County/PI STP00-0000-00(313) Irwin 0000313

		A	B	C	D
	Legal Services	**Parcels**	**Estimated Fees**		**TOTALS**
1	Meeting with Attorney	108	$125.00		$13,500.00
2	Preliminary Titles	108	$200.00		$21,600.00
3	Closing and Final Title	108	$300.00		$32,400.00
4	Recording Fees	108	$50.00		$5,400.00
5	Condemnation Filing	17	$5,000.00		$85,000.00
6	Litigation Costs	17	$25,000.00		$425,000.00
7	Updates and Incidentials	17	$7,500.00		$127,500.00
8					
9					
10					
11					
12					
13					
14					
15					
16					
17			**GRAND TOTAL LEGAL SERVICES**		$710,400.00

Georgia Department of Transportation
Preliminary ROW Cost Estimate Worksheet

Project/County/PI STP00-0000-00(313) Irwin 0000313

		A	B	C	D
	Relocation	**Displacements**	**Estimated Costs**		**TOTALS**
1	Business Displacement	0	$15,000.00		$0.00
2	Residential Tenant	0	$20,000.00		$0.00
3	Residential Owner	9	$40,000.00		$360,000.00
4	Pro-Rata Taxes	108	$1,000.00		$108,000.00
5	Property Pin Replacement	108	$1,000.00		$108,000.00
6					
7					
8					
9					
10					
11					
12					
13					
14					
15					
16					
17			**GRAND TOTAL RELOCATION**		$576,000.00

Georgia Department of Transportation
Preliminary ROW Cost Estimate Worksheet

Project/County/PI STP00-0000-00(313) Irwin 0000313

		A	B	C	D
	Demolition	**Items/Improvements**	**Estimated Costs**		**TOTALS**
1	Residential Structures	9	$15,000.00		$135,000.00
2	Commercial Structures		$25,000.00		$0.00
3	Hotels/Apartments		$60,000.00		$0.00
4	UST's - Dispensers		$50,000.00		$0.00
5	Billboards		$8,000.00		$0.00
6	Signs - Light Standards		$1,500.00		$0.00
7	Water Vaults		$15,000.00		$0.00
8	Gas/Water Service Separation		$2,500.00		$0.00
9					
10					
11					
12					
13					
14					
15					
16					
17			**GRAND TOTAL DEMOLITION**		$135,000.00

Georgia Department of Transportation
Preliminary ROW Cost Estimate Worksheet

Project/County/PI STP00-0000-00(313) Irwin 0000313

		A	B	C	D
	Administrative	**Parcels**	**Man hours per Parcel**		**TOTALS**
1	Pre-Acquisition	108	40		$216,000.00
2	Acquisition	108	100		$540,000.00
3	Relocation		50		$0.00
4	Administrative Appeals	27	50		$67,500.00
5	Post-Acquisition	17	100		$85,000.00
6					
7					
8					
9					
10					
11					
12					
13					
14					
15					
16					
17			**GRAND TOTAL INHOUSE**		$908,500.00

DEPARTMENT OF TRANSPORTATION
STATE OF GEORGIA

INTERDEPARTMENT CORRESPONDENCE

FILE

Project No: **STP00-0000-00(313)** OFFICE: **Tifton**
County **BEN HILL/IRWIN** DATE: **September 28, 2011**

P.I. # **0000313**

Description: ***SR 107 FROM W OF CR 264/IRWIN TO SR 11/US 129/BEN HILL***

FROM Tim Warren, P.E., District Utilities Engineer

TO Peter B. Emmanuel , Project Manager (**Via Email)**

SUBJECT ***UPDATED*** **- UTILITY COST ESTIMATE**

A review of utilities located on the above referenced project has been conducted based on the latest available plans.. Listed below is a breakdown of the anticipated reimbursable and non-reimbursable cost.

Utility Owner	Reimbursable	Non-Reimbursable	Estimate Based on
At&T Corp.	$5,000.00	$2,500.00	Site Visit / Available Drawings
Fitzgerald Water Light & Bond **	$856,800.00	$4,117,000.00	Site Visit / Available Drawings
Georgia Power (Transmission)	$40,000.00	$0.00	Site Visit / Available Drawings
Irwin Emc	$420,000.00	$400,000.00	Site Visit / Available Drawings
Mediacom	$0.00	$175,000.00	Site Visit / Available Drawings
SOUTHERN NATURAL GAS CO	$286,600.00	$122,900.00	Site Visit / Available Drawings
Windstream Communications	$230,000.00	$380,000.00	Site Visit / Available Drawings
Csx R/R (See Richard Crowley)	??????	???????	
Total	$1,838,400.00	$5,197,400.00	

**** Indicates Potential Utility Aid Request from Local Gov't**

Estimate is based on the best available information at the current stage, unforeseen prior rights information may provided by the Utility Company at a later date that could cause some non-reimbursable costs to shift to the reimbursable cost column.

If additional information is needed, please contact me or Bill Cooper, Assistant District Utilities Engineer at (229) 386-3288.

TW:BC:KC
c: Jeff Baker, P.E., State Utilities Engineer
Brent Thomas, District Preconstruction Engineer
Angela Robinson, State Financial Management Administrator

Project No: STP00-0000-00(313)
County: Ben Hill/Irwin

P.I. No: 0000313

Description: SR 107 From CR 264 to SR 11/US 129

Date: October 17, 2011

Subject: Environmental Mitigation Cost Estimate

Type	Required Credits	Estimated Cost per Credit	Total Cost
Wetland	142	$7,000.00	$994,000.00
Stream	2,794	$100.00	$279,400.00

Total Estimated Mitigation Cost: $1,273,400.00

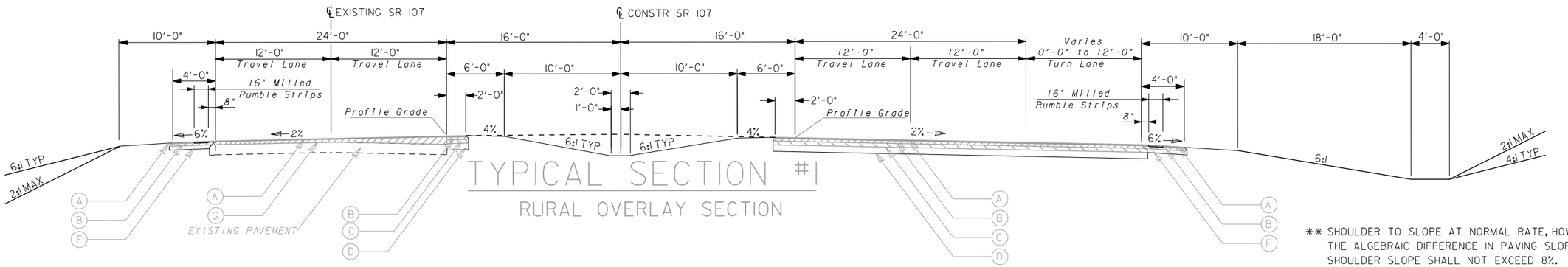

TYPICAL SECTION #1

RURAL OVERLAY SECTION

** SHOULDER TO SLOPE AT NORMAL RATE, HOWEVER, THE ALGEBRAIC DIFFERENCE IN PAVING SLOPE AND SHOULDER SLOPE SHALL NOT EXCEED 8%. MINIMUM SHOULDER SLOPE TO BE 2%.

*** SHOULDER TO SLOPE AT NORMAL RATE OR SUPERELEVATION RATE, WHICHEVER IS GREATER. SEE PLANS FOR THE LOCATION OF SUPER-ELEVATED SECTIONS.

REQUIRED PAVEMENT

- (A) ASPH CONC 12.5 mm SUPERPAVE, GP 2 ONLY, INCL BITUM MATL & H LIME(165 lb/SY)
- (B) ASPH CONC 19 mm SUPERPAVE, GP 1 OR 2, INCL BITUM MATL & H LIME (220 lb/SY)
- (C) ASPH CONC 25 mm SUPERPAVE, GP 1 OR 2, INCL BITUM MATL & H LIME (440 lb/SY)
- (D) GRADED AGGREGATE BASE, 12"
- (E) CONCRETE CURB TYPE 2, 6"x24"
- (F) GRADED AGGREGATE BASE, 6 INCH
- (G) ASPH CONC LEVELING, INCL BITUM MATL & H LIME - AS DIRECTED BY THE ENGINEER
- (H) CONCRETE SIDEWALK, 4"
- (I) CONCRETE CURB TYPE 7, 6"x24"
- (J) GRASS MEDIAN

SLOPE CONTROLS		
SLOPE	CUT	FILL
6:1	0-10'	0-10'
3:1	--	--
2:1	OVER 10'	OVER 10'

2:1 FILL SLOPES OVER 10' HIGH REQUIRE GUARDRAIL

NOTE: IN AREAS OF OVERLAY, REMOVE EXISTING SHOULDER PAVEMENT AND BASE BEYOND THE LIMITS OF EXISTING 24 FOOT NOMINAL PAVEMENT WIDTH.

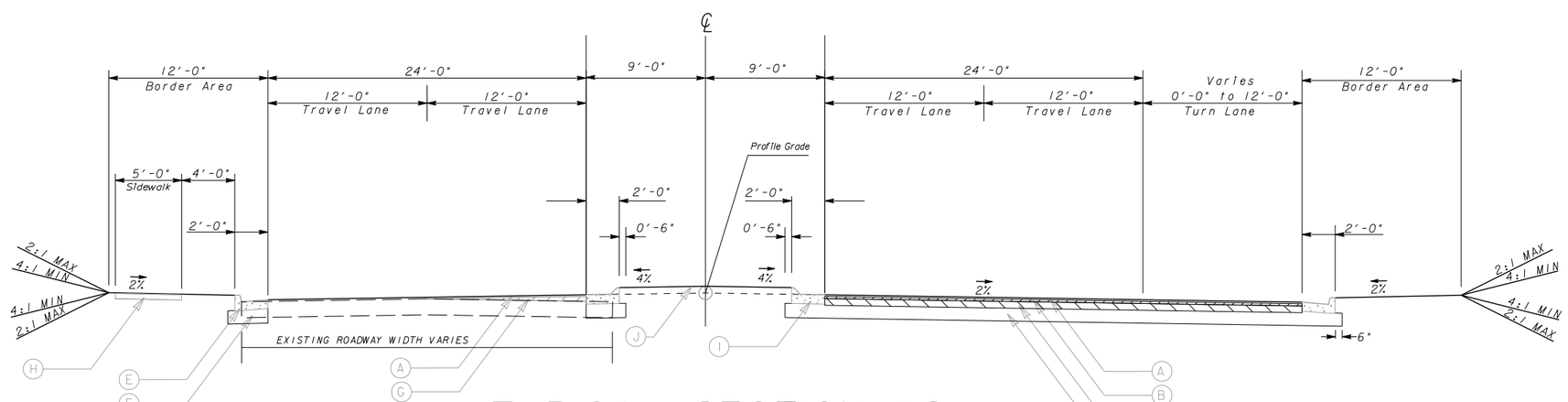

TYPICAL SECTION #2

18' RAISED MEDIAN TANGENT OVERLAY SECTION

SLOPE CONTROLS		
SLOPE	CUT	FILL
4:1	0-5'	0-5'
2:1	OVER 5'	OVER 5'

EXCEPT AS NOTED ON CROSS-SECTIONS

PLANS PREPARED BY:

Florence & Hutcheson, Inc.
CONSULTING ENGINEERS
1300 Ridenour Blvd, Suite 300 • Kennesaw, GA 30152

REVISION DATES		

STATE OF GEORGIA
DEPARTMENT OF TRANSPORTATION

OFFICE: CONSULTANT DESIGN

TYPICAL SECTIONS

SR 107 FROM CR 264 TO SR11/US 129
BEN HILL / IRWIN COUNTY

DRAWING No. 5-01

GPLN

The traffic report addendum is an update to the previously conducted traffic analyses using the revised year 2036 traffic projections and historic crash data for years 2006 to 2008 for the SR 107 corridor between CR 264 (J. Davis Park Road) and US 129 (J. Davis Memorial Highway) in Irwin and Ben Hill Counties.

Capacity Analyses:

Tables 1a-b show the year 2036 Build conditions average daily traffic volumes, truck volumes and Levels of Service for the roadway segments and intersections, respectively along the SR 107 corridor.

Table 1a
Build Condition AADT, Trucks and LOS for Roadway Segments in the Study Area

Road Segment	Design Year 2036				
	AADT (Trucks)	Eastbound		Westbound	
		AM LOS (Density)	PM LOS (Density)	AM LOS (Density)	PM LOS (Density)
SR 107 between CR 46 (Carter Dr) and CR 106 (Redwood Rd)	3,500 (1,050)	A (2.1)	A (1.4)	A (1.4)	A (2.1)
SR 107 between CR 114 (Haile Booker Rd) and CR 115 (Franklin La)	7,600 (2,280)	A (4.4)	A (3.0)	A (3.0)	A (4.4)
SR 107 between CR 247 (Perry House Rd) and CR 345 (Appomatox Rd)	12,900 (3,870)	A (7.5)	A (4.6)	A (4.6)	A (7.5)
SR 107 between Walmart dr and US 129 (J. Davis Mem. Hwy)	17,200 (5,160)	A (9.1)	A (7.0)	A (7.0)	A (9.1)

Table 1b
Build Condition AADT, Trucks and LOS for Major Intersections in the Study Area

Intersection		Design Year 2036					
		SR 107			Sidestreet		
		AADT (Trucks)	AM (Delay)	PM (Delay)	AADT (Trucks)	AM (Delay)	PM (Delay)
1	SR 107 at CR 264 (J. Davis Park Rd)	3,200 (960)	A (1.5)*	A (1.0)*	600 (180)	B (10.4)	B (10.5)
2	SR 107 at CR 46 (Carter Dr)	3,500 (1,050)	A (0.6)*	A (0.7)*	400 (120)	B (10.5)	B (10.9)
3	SR 107 at CR 106 (Redwood Rd)	3,500 (1,050)	A (3.6)*	A (3.0)*	1,900 (570)	B (10.8)	A (9.9)
4	SR 107 at CR 103 (Clay Rd)	3,200 (960)	A (0.2)*	A (0.3)*	300 (90)	B (10.1)	B (10.0)
5	SR 107 at SR 125 (Irwinville Hwy)	3,400 (1,020)	B (14.2)	B (14.2)	2,800 (840)	A (4.8)	A (5.2)
6	SR 107 at CR 344 (Newcomer Trl) / CR 104 (Bells Cabin Rd)	5,400 (1,620)	A (2.7)*	A (2.8)*	1,900 (570)	B (14.2)	B (11.4)
7	SR 107 at CR 130 (Gettysburg Rd)	5,700 (1,710)	A (0.4)*	A (0.5)*	300 (90)	A (9.6)	A (9.2)
8	SR 107 at CR 381 (Meadow La)	5,800 (1,740)	A (0.0)*	A (0.0)*	100 (30)	A (9.6)	A (9.2)
9	SR 107 at CR 361 (J. Davis Hwy)	6,900 (2,070)	A (0.1)8	A (0.2)*	1,300 (390)	B (12.9)	B (13.0)
10	SR 107 at CR 113 (Harris Rd)	7,100 (2,130)	A (0.38)*	A (0.7)*	900 (270)	B (11.9)	B (12.9)
11	SR 107 at CR 114 (Haile Booker Rd)	7,600 (2,280)	A (0.6)*	A (0.4)*	700 (210)	C (15.1)	C (16.2)
12	SR 107 at CR 115 (Franklin Rd)	7,600 (2,280)	A (0.6)*	A (1.3)*	1,000 (300)	B (10.0)	B (11.7)
13	SR 107 at CR 247 (Perry House Rd)	12,900 (3,870)	C (25.6)	C (27.2)	7,700 (2,310)	B (17.3)	B (16.9)
14	SR 107 at CR 345 (Appomatox Rd)	12,900 (3,870)	A (0.8)*	A (1.0)*	2,200 (660)	B (13.3)	C (15.3)
15	SR 107 at CR 242 (Calhoun Rd)	12,700 (3,810)	A (0.4)*	A (0.2)*	700 (210)	C (17.1)	C (17.6)
16	SR 107 at Zaxby's/Walmart dr	12,600 (3,780)	C (25.5)	B (19.9)	5,500 (1,650)	C (31.7)	C (31.9)
17	SR 107 at Walmart dr	17,200 (5,160)	A (0.0)*	A (0.0)*	10,800 (3,240)	B (12.4)	B (14.4)
18	SR 107 at US 129 (J. Davis Mem. Hwy)	17,200 (5,160)	D (40.8)	D (36.9)	17,400 (5,220)	C (25.9)	C (23.4)

*- unsignalized free movement

As shown in Tables 1a-b, all roadway segments and intersections along the SR 107 corridor are expected to operate with acceptable Levels of Service D or better in the design year 2036 Build conditions during both the AM and PM peak hours.

Crash History:

Historic crash data for the SR 107 corridor was analyzed for years 2006-2008. The corridor was analyzed in three segments: between CR 264 (J. Davis Park Road) and SR 125 (Irwinville Highway) as a Rural Major Collector; between SR 125 (Irwinville Highway) and CR 247 (Perry House Road) as an Urban Minor Arterial, non-National Highway System; and between CR 247 (Perry House Road) and US 129 (J. Davis Memorial Highway) as an Urban Minor Arterial, non-National Highway System. Figure 1 shows the summary of crashes along the SR 107 corridor and Tables 2a-c show the summary of crash history compared to statewide averages for crash, injury and fatality rates:

Table 2a
Crash Data for the SR 107 Corridor between
CR 264 and SR 125* (Rural Major Collector)

Year	Total			Injury			Fatal		
	# of Crashes	Crash Rate**	Statewide Average Crash Rate**	# of Crashes	Crash Rate**	Statewide Average Crash Rate**	# of Crashes	Crash Rate**	Statewide Average Crash Rate**
2006	1	19	203	1	19	73	0	0.00	3.28
2007	4	85	203	3	64	72	0	0.00	3.24
2008	5	112	194	2	45	68	0	0.00	3.03

*- not including SR 107/SR 125 intersection
** - Rates are per 100 million vehicle miles travelled

Table 2b
Crash Data for the SR 107 Corridor between
SR 125 and CR 247* (Urban Minor Arterial, non-NHS)

Year	Total			Injury			Fatal		
	# of Crashes	Crash Rate**	Statewide Average Crash Rate**	# of Crashes	Crash Rate**	Statewide Average Crash Rate**	# of Crashes	Crash Rate**	Statewide Average Crash Rate**
2006	5	141	548	1	28	137	0	0.00	1.43
2007	2	57	513	1	28	126	0	0.00	1.36
2008	3	88	469	0	0	176	0	0.00	1.33

*- including SR 107/SR 125 intersection but excluding SR 107/CR 247 intersection
** - Rates are per 100 million vehicle miles travelled

Table 2c
Crash Data for the SR 107 Corridor between CR 247 and US 129 (Urban Minor Arterial, non-NHS)

Year	Total			Injury			Fatal		
	# of Crashes	Crash Rate**	Statewide Average Crash Rate**	# of Crashes	Crash Rate**	Statewide Average Crash Rate**	# of Crashes	Crash Rate**	Statewide Average Crash Rate**
2006	17	562	548	6	198	137	0	0.00	1.43
2007	28	866	513	7	217	126	0	0.00	1.36
2008	18	622	469	6	207	176	0	0.00	1.33

*- including SR 107/CR 247 and SR 107/US 129 intersections
** - Rates are per 100 million vehicle miles travelled

As shown in Tables 2a-c, the statewide total crash rate averages are not exceeded on the SR 107 corridor for the segments: between CR 264 (J. Davis Park Road) and SR 125 (Irwinville Highway); and between SR 125 (Irwinville Highway and CR 247 (Perry House Road). However, for the segment between CR 247 (Perry House Road) and US 129 (J. Davis Memorial Highway), the statewide averages are exceeded.

In the three year period, there were no fatality crashes along the SR 107 corridor between CR 264 (J. Davis Park Road) and US 129 (J. Davis Memorial Highway).

In addition, crash data was reviewed to identify the type and possible cause of the crashes. These findings are summarized in Tables 3a-d for major intersections and Tables 4a-c for roadway segments.

Table 3a
Accident Type at Intersection of SR 107 at CR 245

Collisions	No. of Crashes (3-year Period)		
	Total	Injury	Fatal
Sideswipe - Same Direction	0	0	0
Angle	5	2	0
Rear End	0	0	0
Head On	2	2	0
Not A Collision With A Motor Vehicle	0	0	0
Sideswipe - Opposite Direction	0	0	0
Total	**7**	**4**	**0**

Table 3b
Accident Type at Intersection of SR 107 at SR 125

Collisions	No. of Crashes (3-year Period)		
	Total	Injury	Fatal
Sideswipe - Same Direction	1	0	0
Angle	2	0	0
Rear End	1	0	0
Head On	0	0	0
Not A Collision With A Motor Vehicle	0	0	0
Sideswipe - Opposite Direction	0	0	0
Total	**4**	**0**	**0**

Table 3c
Accident Type at Intersection of SR 107 at CR 247

Collisions	No. of Crashes (3-year Period)		
	Total	Injury	Fatal
Sideswipe - Same Direction	2	0	0
Angle	4	3	0
Rear End	3	0	0
Head On	0	0	0
Not A Collision With A Motor Vehicle	1	0	0
Sideswipe - Opposite Direction	0	0	0
Total	**10**	**3**	**0**

Table 3d
Accident Type at Intersection of SR 107 at US 129

Collisions	No. of Crashes (3-year Period)		
	Total	Injury	Fatal
Sideswipe - Same Direction	1	0	0
Angle	10	4	0
Rear End	23	4	0
Head On	0	0	0
Not A Collision With A Motor Vehicle	1	0	0
Sideswipe - Opposite Direction	1	1	0
Total	**36**	**9**	**0**

Table 4a
Accident Type along SR 107 between CR 264 and SR 125

Collisions	No. of Crashes (3-year Period)		
	Total	Injury	Fatal
Sideswipe - Same Direction	1	0	0
Angle	0	0	0
Rear End	0	0	0
Head On	0	0	0
Not A Collision With A Motor Vehicle	1	1	0
Sideswipe - Opposite Direction	1	1	0
Total	**3**	**2**	**0**

Table 4b
Accident Type along SR 107 between SR 125 and CR 247

Collisions	No. of Crashes (3-year Period)		
	Total	Injury	Fatal
Sideswipe - Same Direction	0	0	0
Angle	1	1	0
Rear End	4	1	0
Head On	0	0	0
Not A Collision With A Motor Vehicle	1	0	0
Sideswipe - Opposite Direction	0	0	0
Total	**6**	**2**	**0**

Table 4c
Accident Type along SR 107 between CR 247 and US 129

Collisions	No. of Crashes (3-year Period)		
	Total	Injury	Fatal
Sideswipe - Same Direction	2	0	0
Angle	1	0	0
Rear End	13	6	0
Head On	0	0	0
Not A Collision With A Motor Vehicle	0	0	0
Sideswipe - Opposite Direction	1	1	0
Total	**17**	**7**	**0**

As shown in Tables 3a-d, the majority of crash types at the major intersections are angle and rear-end collisions.

As shown in Tables 4a-c, the majority of crash types on the roadway segments are sideswipe – same direction, angle and rear-end collisions.

Figure 1 – Summary of Crash Data

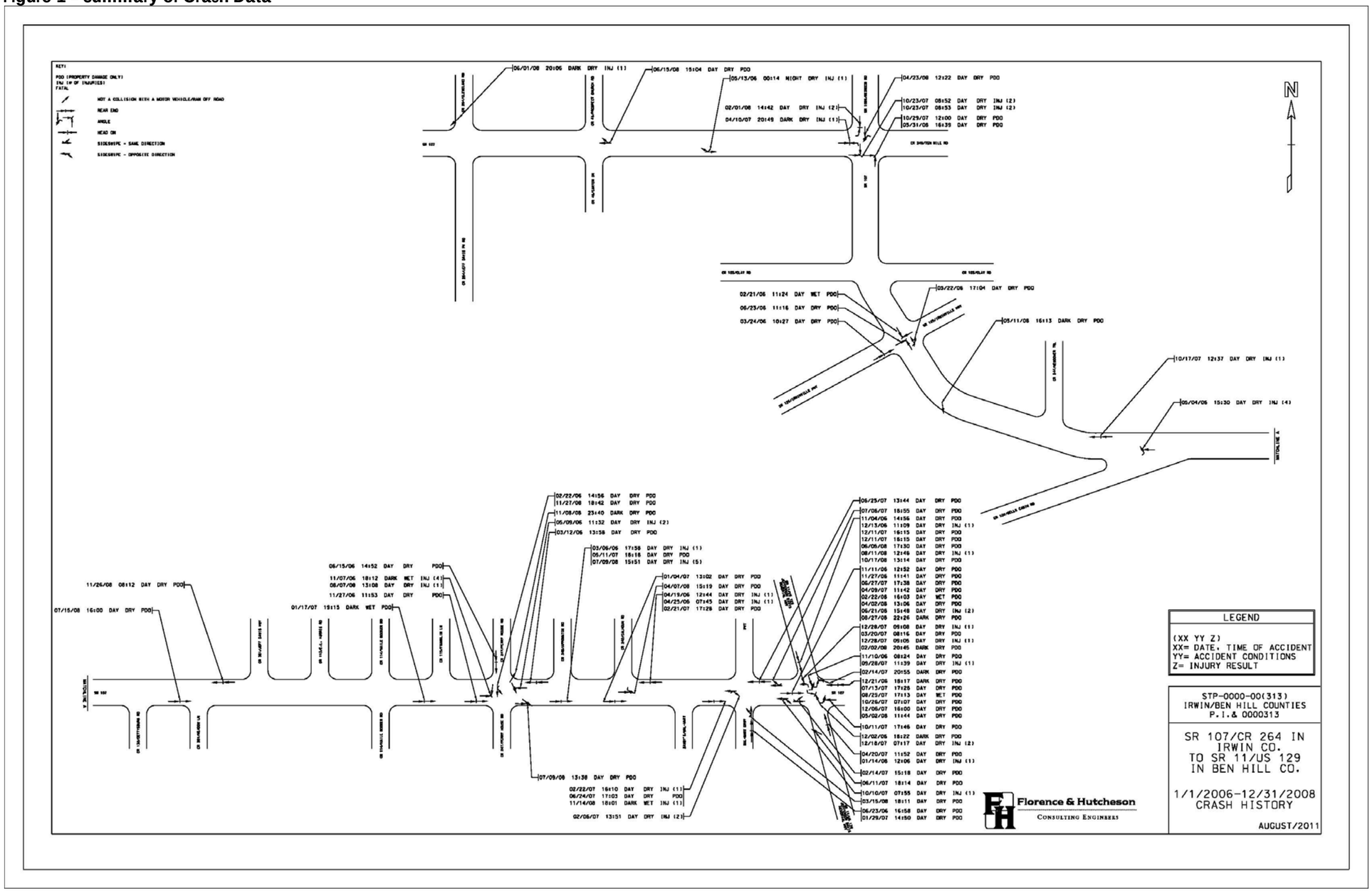

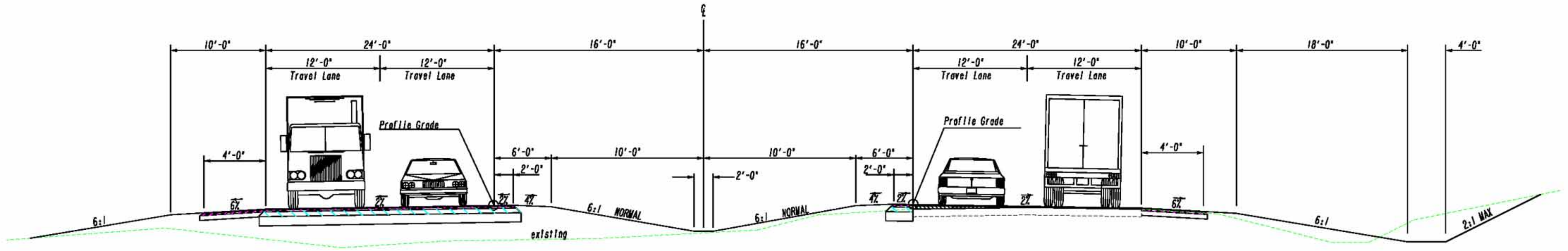

Widen to One Side
4 Lanes With a 32' Depressed Median
(D.S. 55 & 65mph)
NORMAL CROWN

Florence & Hutcheson, Inc.
CONSULTING ENGINEERS
1300 Ridenour Blvd., Suite 300 • Kennesaw, GA 30152

GDOT
Georgia Department of Transportation

SCALE IN FEET
0 200 400 800

LEGEND
SIDEWALK
PROPOSED LAYOUT — BRIDGE, LANE, LANE, MEDIAN
PROPOSED SIGNAL
PROPOSED RIGHT OF WAY
EXISTING RIGHT OF WAY AND PROPERTY LINE
HISTORIC PROPERTY
DISPLACEMENT
STREAM
WETLANDS

REVISED CONCEPT LAYOUT
STP00-0000-00(313)
P.I. 0000313
BEN HILL/ IRWIN COUNTIES
SR 107 FROM CR 264 TO SR 11/ US129
SEPTEMBER 23, 2011
SHEET 1 OF 4

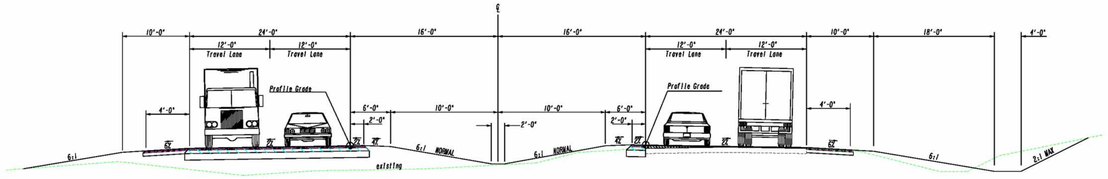

Widen to One Side
4 Lanes With a 32' Depressed Median
(D.S. 55 & 65mph)
NORMAL CROWN

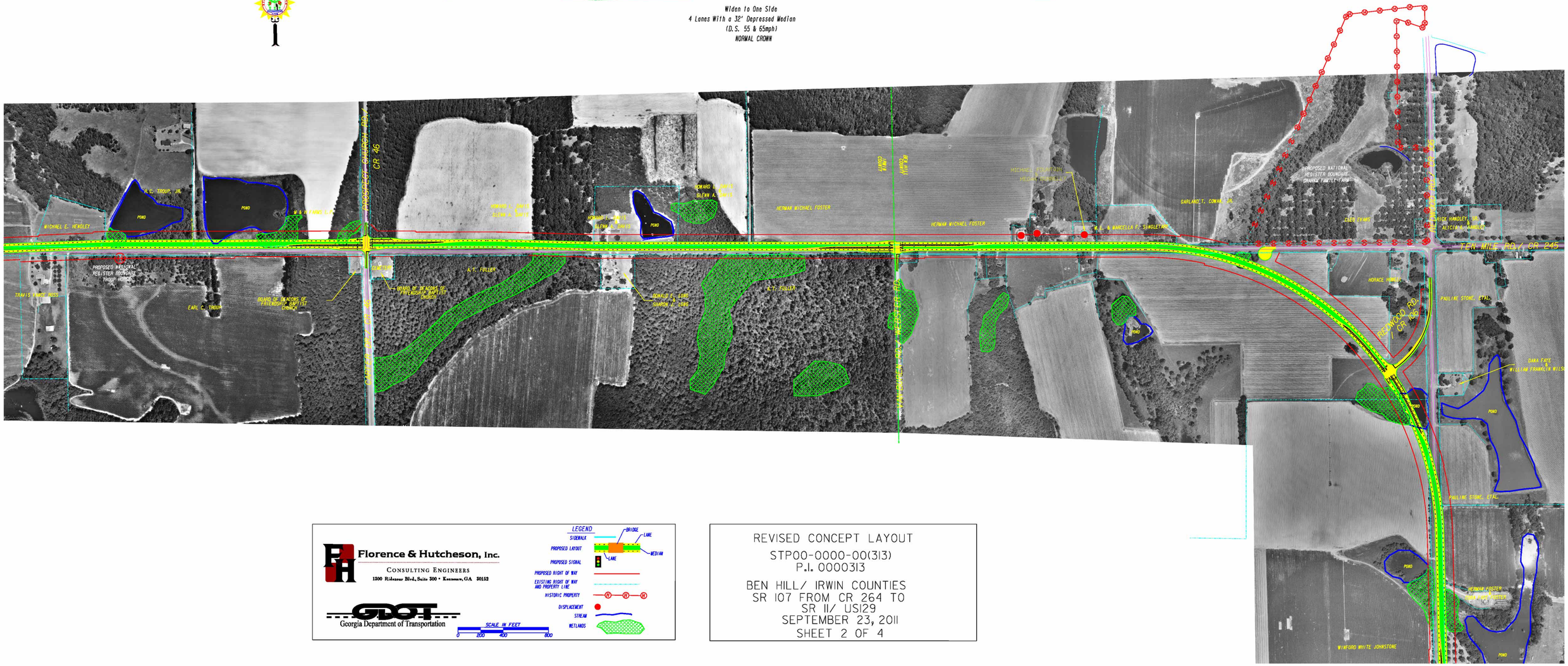

Florence & Hutcheson, Inc.
CONSULTING ENGINEERS
1300 Ridgeview Blvd., Suite 300 • Kennesaw, GA 30152

GDOT
Georgia Department of Transportation

SCALE IN FEET
0 200 400 800

LEGEND
SIDEWALK
PROPOSED LAYOUT
PROPOSED SIGNAL
PROPOSED RIGHT OF WAY
EXISTING RIGHT OF WAY AND PROPERTY LINE
HISTORIC PROPERTY
DISPLACEMENT
STREAM
WETLANDS
BRIDGE
LANE
MEDIAN
LANE

REVISED CONCEPT LAYOUT
STP00-0000-00(313)
P.I. 0000313
BEN HILL/ IRWIN COUNTIES
SR 107 FROM CR 264 TO
SR 11/ US129
SEPTEMBER 23, 2011
SHEET 2 OF 4

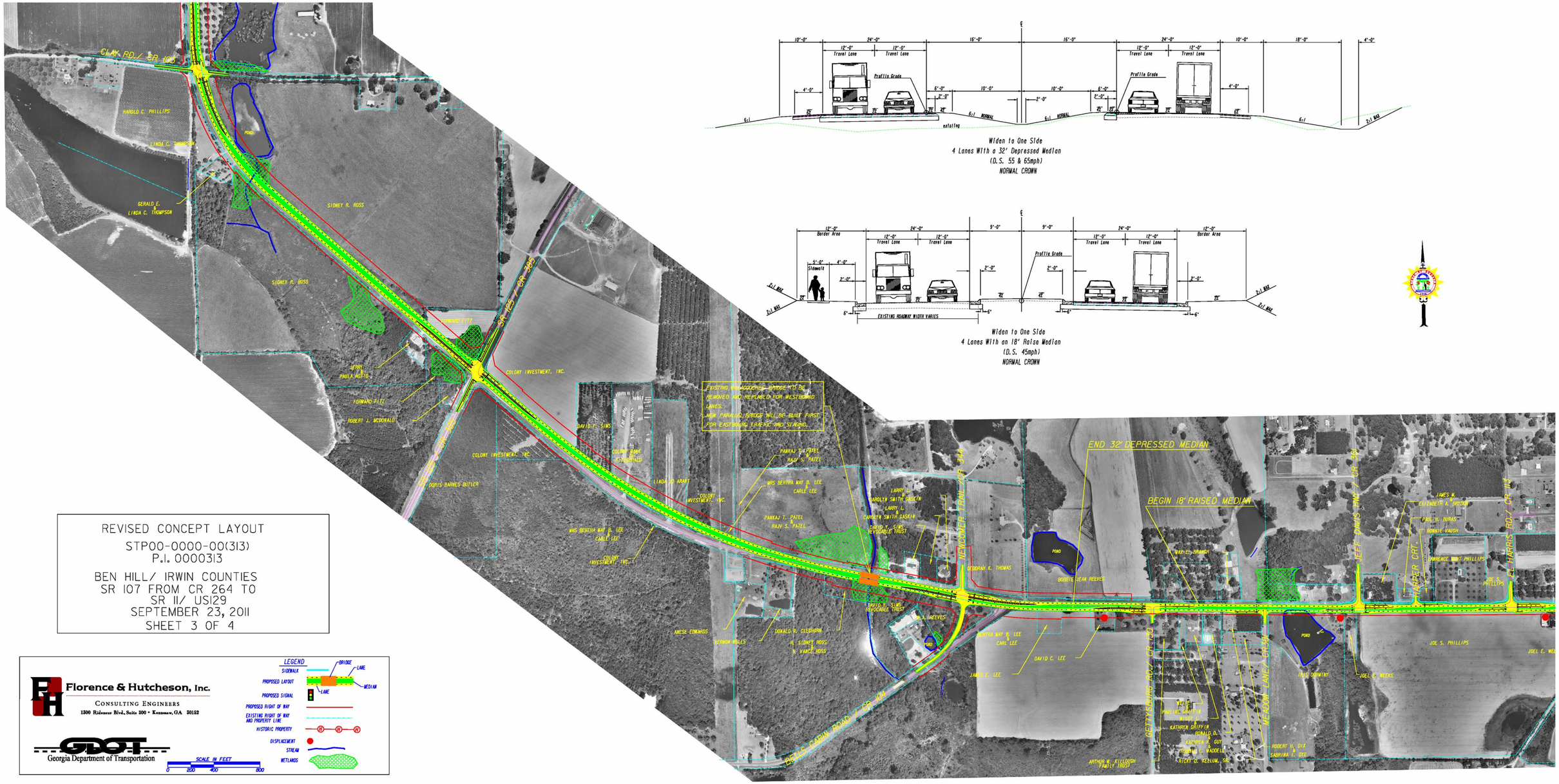

Widen to One Side
4 Lanes With a 32' Depressed Median
(D.S. 55 & 65mph)
NORMAL CROWN

Widen to One Side
4 Lanes With an 18' Raise Median
(D.S. 45mph)
NORMAL CROWN

REVISED CONCEPT LAYOUT

STP00-0000-00(313)
P.I. 0000313

BEN HILL/ IRWIN COUNTIES
SR 107 FROM CR 264 TO
SR 11/ US129
SEPTEMBER 23, 2011
SHEET 3 OF 4

Florence & Hutcheson, Inc.
CONSULTING ENGINEERS
1300 Ridenour Blvd., Suite 300 • Kennesaw, GA 30152

Georgia Department of Transportation

LEGEND
SIDEWALK
PROPOSED LAYOUT
BRIDGE
LANE
MEDIAN
PROPOSED SIGNAL
LANE
PROPOSED RIGHT OF WAY
EXISTING RIGHT OF WAY AND PROPERTY LINE
HISTORIC PROPERTY
DISPLACEMENT
STREAM
WETLANDS

SCALE IN FEET
0 200 400 800

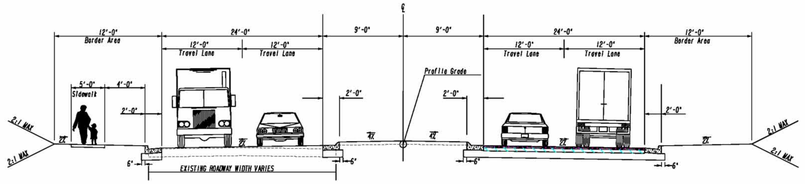

Widen to One Side
4 Lanes With an 18' Raise Median
(D.S. 45mph)
NORMAL CROWN

REVISED CONCEPT LAYOUT
STP00-0000-00(313)
P.I. 0000313
BEN HILL/ IRWIN COUNTIES
SR 107 FROM CR 264 TO
SR 11/ US129
SEPTEMBER 23, 2011
SHEET 4 OF 4

Florence & Hutcheson, Inc.
CONSULTING ENGINEERS
1300 Ridgewoor Blvd, Suite 300 • Kennesaw, GA 30152

GDOT
Georgia Department of Transportation

LEGEND
SIDEWALK
PROPOSED LAYOUT
BRIDGE
LANE
MEDIAN
PROPOSED SIGNAL
LANE
PROPOSED RIGHT OF WAY
EXISTING RIGHT OF WAY AND PROPERTY LINE
HISTORIC PROPERTY
DISPLACEMENT
STREAM
WETLANDS

SCALE IN FEET
0 200 400 800

DEPARTMENT OF TRANSPORTATION
STATE OF GEORGIA

INTERDEPARTMENT CORRESPONDENCE

FILE: STP00-0000-00(311)(313)(314)
Turner Ben Hill Irwin
P.I. Nos.: 0000311 0000313 0000314
SR 107 from I-75 to SR 11/US 129

OFFICE: Engineering Services

DATE: January 28, 2010

FROM: Ronald E. Wishon, Project Review Engineer REW

TO: Bobby K. Hilliard, PE, State Program Delivery Engineer
Attn.: Peter Emmanuel

SUBJECT: IMPLEMENTATION OF VALUE ENGINEERING STUDY ALTERNATIVES

The VE Study for the above projects was held August 10-13, 2009. Responses were received on January 7, 2010 and revised responses were received on January 27, 2010. Recommendations for implementation of Value Engineering Study Alternatives are indicated in the table below. The Project Manager shall incorporate the VE alternatives recommended for implementation to the extent reasonable in the design of the project.

ALT #	Description	Potential Savings/LCC	Implement	Comments
STP00-0000-00(311) Turner PI No. 0000311				
T-2	Use intermittent passing lanes in lieu of a four lane rural divided section from I-75 to CR 250	$24,316,393	No	The use of intermittent passing lanes does not meet the need and purpose of the project. Retaining the proposed four-lane divided typical section would promote economic development and enhance the movement of goods.
T-3	Use a 32 ft rural grassed median in lieu of a 44 ft rural grassed median	$633,902	Yes	This will be done.
T-4	Use an 18 ft raised median in lieu of a 24 ft raised median in urban sections	$148,310	Yes	This will be done.
T-6	Use 4 ft paved shoulders in lieu of 6 ½ ft paved shoulders	$741,609	Yes	This will be done.
T-8	Use 24 in curb and gutter in lieu of 30 in curb and gutter	$21,450	Yes	This will be done.

T-9	Use 11 ft inside lanes in lieu of 12 ft lanes	Proposed = $460,020 Actual = $253,000	Yes, partially	SR 107 from I-75 to CR 205 has 3 long curves that will require 12 foot lanes due to the high truck percentages. Twelve foot lanes will be used through the last curve. The final four miles of the project, up to CR 250, will use 11 foot inside lanes as proposed by the VE Team.
T-11	Extend the existing three lane section at I-75 to just east of Thompson Road	Design Suggestion	No	The VE Team believed that this design would mitigate an adverse effect on the historic house on the south side of SR 107; however, the existing edge of pavement cannot be held on the north side since a 20 ft clear zone is required for a 55 MPH speed. Using a 3 lanes section in this area would not eliminate the impacts to the historic property.
G-1	Shorten the left turn lanes to the minimum allowable deceleration length	$219,912	Yes	This will be done.
G-2	Use Type A median openings instead of Type B	$1,000,263	No	Based on traffic volumes and typical crash types along this corridor, the Office of Traffic Operations recommends the use of Type B openings along this corridor. Type B median openings perform better for both safety and operational reasons, especially at high speeds. This is mainly due to the offset nature of the left turn lane, creating better operational sight distance.
G-3	Eliminate the Firetower Road connector at Sta. 226+63 by reusing the existing intersection at Jeannette Road	$57,564	Yes	This will be done.
G-5	Block Geoghagen Road (CR 41) just to the north of proposed SR 107	$25,298	Yes	This will be done.
G-8	Minimize improvements to Live Oak Road and relocate median opening to align with Live Oak Road in its new location	$90,117	Yes	This will be done.

G-14	Eliminate median openings at Sta. 304+70 and Sta. 334+00 and replace with a single median opening at Sta. 319+35	$216,322	Yes	The median openings will be closed as proposed by the VE Team. The new median opening will be located between Sta. 315+00 and 316+00 which provides increased sight distance than Sta. 319+35.
STP00-0000-00(313) Irwin Ben Hill PI No. 0000313				
T-1	Use a three lane rural section in lieu of a four lane urban divided section	$4,059,230	No	The need and purpose for this project is focused on economic development and intermittent passing lanes would not satisfy this need. Based on the projected LOS, a four lane section is recommended for this corridor. The Chief Engineer has given approval for this project as a 4 lane GRIP style corridor.
T-2	Use intermittent passing lanes in lieu of a four lane rural divided section	$12,741,906	No	The need and purpose for this project is focused on economic development and intermittent passing lanes would not satisfy this need. The Chief Engineer has given approval for this project as a 4 lane GRIP style corridor.
T-3	Use a 32 ft rural grassed median in lieu of a 44 ft rural grassed median	$615,328	Yes	This will be done.
T-4	Use an 18 ft raised median in lieu of a 24 ft raised median in urban sections	$160,657	Yes	This will be done.
T-5	Use 12 ft urban shoulders in lieu of 16 ft urban shoulders	$93,571	Yes	This will be done.
T-6	Use 4 ft paved shoulders in lieu of 6 ½ ft paved shoulders	$653,201	Yes	This will be done.
T-7	Eliminate sidewalks from the urban section	$505,257	No	T-10 will be implemented; therefore, T-7 cannot be done.
T-8	Use 24 in curb and gutter in lieu of 30 in curb and gutter	$50,262	Yes	This will be done.

T-9	Use 11 ft inside lanes in lieu of 12 ft lanes	$659,661	No	Several factors preclude the use of 11 foot lanes on this section of the project. AASHTO recommends 12 foot lanes for higher speed designs, roadways with a significant number of curves, and relatively high truck traffic. Portions of the project will utilize a 65 MPH speed design. Truck traffic is projected to be 30%. The proposed geometry of the roadway would require tapering the inside lane from 11 feet to the required 12 feet throughout the curves. This design would be difficult to construct.
T-10	Eliminate the sidewalk from the south side of the urban section	$265,028	Yes	This will be done.
D-1	Use HDPE pipe in lieu of RCP for longitudinal drainage	$161,116	No	The contractor is incentivized to use the least expensive of the materials specified in the Pipe Culvert Materials Alternatives Chart.
G-1	Shorten the left turn lanes to the minimum allowable deceleration length	$459,878	Yes	This will be done.
G-2	Use Type A median openings instead of Type B	$759,220	No	Based on traffic volumes and typical crash types along this corridor, the Office of Traffic Operations recommends the use of Type B openings along this corridor. Type B median openings perform better for both safety and operational reasons, especially at high speeds. This is mainly due to the offset nature of the left turn lane, creating better operational sight distance.
G-17	Reduce the speed limit to 55 mph at Van Buren/Webster Road and shorten the curve radius at Sta. 364+09	Proposed = $191,880 Actual = $124,166	Yes, with modifications	Reduction of the speed design is not required in order to shorten the curve radii. A historic resource is located on the north side of SR 107 in the vicinity of this proposed recommendation. The curve radii can be reduced to a minimum of 2600 ft and still avoid impacts to the property.

STP00-0000-00(314) Turner Irwin PI No. 0000314				
T-2	Use intermittent passing lanes in lieu of a four lane rural divided section	$32,578,455	No	The use of intermittent passing lanes does not meet the need and purpose of the project. Retaining the proposed four-lane divided typical section would promote economic development and enhance the movement of goods.
T-3	Use a 32 ft rural grassed median in lieu of a 44 ft rural grassed median	$628,569	Yes	This will be done.
T-6	Use 4 ft paved shoulders in lieu of 6 ½ ft paved shoulders	$681,424	Yes	This will be done.
T-9	Use 11 ft inside lanes in lieu of 12 ft lanes	$737,105	Yes	This will be done.
B-2	Use a Type A median crossover and shorten the WB turn lane to Rebecca Waterloo Highway so it does not affect the bridge over Deep Creek	$417,850	Yes	This will be done to the extent possible. The final length and location of the bridge has not been determined, but a Type A median crossover and shorter turn lane will be implemented as described. Once the final hydraulic study is completed, any possible modifications to the bridge will be determined.
G-1	Shorten the left turn lanes to the minimum allowable deceleration length	$500,069	Yes	This will be done.
G-2	Use Type A median openings instead of Type B	$1,061,460	No	Based on traffic volumes and typical crash types along this corridor, the Office of Traffic Operations recommends the use of Type B openings along this corridor. Type B median openings perform better for both safety and operational reasons, especially at high speeds. This is mainly due to the offset nature of the left turn lane, creating better operational sight distance.
G-10	Maintain the existing alignment at Hawkins Road	$72,164	Yes	This will be done.

G-11	Maintain Eleanor Circle at the existing alignment at Sta. 313+38	$63,174	Yes	This will be done.
G-12	Maintain the existing alignment at the Big Creek/Truman Road intersection	$309,762	Yes	This will be done.
G-13	Maintain the existing alignment at Eisenhower Road	$70,778	Yes	This will be done.
G-14	Eliminate the median openings at Sta. 214+80, 258+40 and 288+00 and replace them with openings at Sta. 233+53 and 273+91	$208,687	Yes, with modifications	The number of median openings in this area will be reduced from three to two; however, the median openings will be located at Sta. 239+00 and Sta. 284+00 instead of the locations proposed by the VE Team. Sta. 273+91 is located on the bridge over the Alapaha River and shifting the opening to Sta. 284+00 locates it as far west as possible without placing the turn lanes on the bridge. Sta. 239+00 is equidistant between Hawkins Road/CR 62 and Sta. 284+00.

The Office of Engineering Services concurs with the Project Manager's responses.

Approved: _____ **Date:** 2/1/10
Gerald M. Ross, PE, Chief Engineer

REW/LLM
Attachments
c: Ben Buchan
Paul Liles/Bill Duvall/Bill Ingalsbe/Shaun Williams
Bobby Hilliard/Mike Haithcock/Peter Emmanuel/Kimberly Nesbitt
Amber Phillips
Joe Cowan
Nabil Raad
Lisa Myers
Matt Sanders